City of San Jose - Building Division - Index Cover

Address 170 Bernal Rd.

PERMIT # (B E P M) 09042621

Prepared By HK **Page #** _____ **Date** 12-23-09

Category	Document Type	Sub Document Type
☐ MP Tracts	☐ PP Plot Plans	
	☐ TP Tract Plans	☐ BD Building ☐ PB Plumbing ☐ MM Mechanical ☐ EE Electrical
	☐ TD Supporting Documents	
	☐ TC Structural Calculations	
	☐ TN Energy Calculations	
	☐ TS Soils Report	
	☐ TT Trusses/Shop Drawings	
	☐ TM Tract Map	☐ AR Addressed
☒ PL Plans	☐ PY Preliminary Plans	
	☒ EP Plans	☒ BL Building ☐ BP Plumbing ☐ BM Mechanical ☐ BE Electrical
	☐ PM Parcel Map	
	☐ AM Alternate Materials	
	☐ SC Structural Calculations	
	☐ EC Energy Calculations	
	☐ SD Supporting Documents	
	☐ SR Soils Report	
	☐ TR Trusses/Shop Drawing	
	☐ CR Copy Request	
☐ PT Permits	☐ AD Addressing	
	☐ IN Inspection Notices	☐ EP Expired
	☐ PR Permits & Applications	☐ CC Cash Receipts / Refunds ☐ CO C of O ☐ CP Correspondence ☐ EX Expired / Voided ☐ FI Finals ☐ IN Initial ☐ IS Initial – Supporting Doc's ☐ MR Meter Releases ☐ SI Special Inspection Reports
	☐ CF Compliance Files	☐ CN Compliance Notices ☐ RS Rescind ☐ SW Stop Work Orders
	☐ DR Damage Reports	☐ ED Earthquake Damage ☐ FD Flood Damage ☐ FA Fire/Auto Survey ☐ IV Investigation Survey

Taco Bell

170 BERNAL RD
SAN JOSE, CALIFORNIS

TACO BELL®

REQUIRED INSPECTIONS IN ADDITION TO BUILDING DIVISION INSPECTIONS

SPECIAL INSPECTION REQUIRED* (X) YES ( ) NO
STRUCTURAL OBSERVATION (X) YES ( ) NO
SOILS ENGINEER INSPECTION REQ'D ( ) YES ( ) NO
COMPACTION REPORT REQ'D ( ) YES ( ) NO
FLOOD ELEVATION CERT. REQ'D ( ) YES ( ) NO
PUBLIC WORKS INSPECTION REQ'D ( ) YES ( ) NO
FIRE DEPT INSPECTION REQ'D ( ) YES ( ) NO
COMMENTS * CONCRETE, SHEAR WALLS, EPOXY ANCHORS

CITY OF SAN JOSE BUILDING DIVISION
APPROVED PLAN SET
☒ OFFICE SET ☐ FIELD SET
ADDRESS 170 BERNAL RD.
PERMIT No. 09-042021 DATE 12/14/09
P.C. No. 09-025971 DATE 11/24/09
CODE EDITIONS: CBC UPC, UMC07 NEC___ ENERGY___ DA___
OCCUPANCY GROUP(S) A-2 TYPE OF CONSTRUCTION VB
PLANS APPROVED FOR: CHECKED BY APPROVED BY
(X) BUILDING NON STRUCT VC VC
(X) BUILDING STRUCT
( ) ELECTRICAL
( ) PLUMBING
( ) MECHANICAL
( ) FIRE
( ) ZONING ______ PLANNING PERMIT # ______
COMMENTS ______

ADDRESS: 170 BERNAL RD, SAN JOSE, CA

DESCRIPTION OF PROJECT:

This project involves the remodel of an existing Taco Bell restaurant. The exterior facade will be remodeled to architecturally emphasize the entry locations and include updated images of Taco Bell. New tower elements will replace the existing entrance areas and existing stucco exterior will be refinished. New signage and awnings will be provided. Misc.. kitchen equipment will be added/replaced to back kitchen and will require minor modifications to M.E.P. The dining room will have an updated decor to accommodate 60 seats. Site work includes upgrade the parking striping and handicap parking . Additions to the dining room and a storage area & walk-in cooler. △1

LEGAL JURISDICTION: CITY OF SAN JOSE, CA

BUILDING CODE: UBC (2007 EDITION), UPC 2007, UMC 2007, NEC 2007

BUILDING AREA: EXTG. BLD. 1488 SQFT REMODELED AREA 2253 SQFT.SEATING: 60

ZONING: CC

EXISTING OCCUPANCY: "B" NEW OCCUPANCY " A2" △2

TYPE CONSTRUCTION: V-B

PHONE LINES: EXISTING

ELECTRIC SERVICE: 600 AMPS / 3 - PHASE / 120/280 VOLT

GAS: EXISTING

WATER PRESSURE: EXISTING

EXISTING BUILDING AREA AND OCCUPANT LOAD

TYPE	AREA	FACTOR	OCCUPANTS
DINING AREA	796 SQFT	1/PERFIXSEAT	=60
PUBLIC SERVICE AREA	242 SQFT	@ 1/200SQFT	= 1.21
KITCHEN AREA	560 SQFT	@ 1/200SQFT	= 2.80
STORAGE AREA	170 SQFT	@ 1/300SQFT	= .56
COOLER/FREEZER	84 SQFT	@ 1/300SQFT	= .28
REST ROOMS	136 SQFT	@ 1/300SQFT	= .45
TOTAL			65.3

PROJECT SUMMARY

WIND SPEED: 85 M.P.H. / EXPOSURE B △2

ROOF LIVE LOAD: 20 P.S.F.

DESIGN CRITERIA

REFER TO CIVIL DRAWINGS.

LEGAL DESCRIPTION

CIVIL/LANDSCAPE
NOT USED

TRUSS DESIGN
S1 ROOF FRAMING
SD1 TRUSS STRUCTURAL DETAILS

STRUCTURAL
S1 STRUCTURAL NOTES
S2 TYPICAL DETAILS
S3 DEMO PLAN
S4 FOUNDATION PLAN
S5 ROOF FRAMING PLAN
S6 HIGH ROOF FRAMING PLAN
S7 SECTIONS & DETAILS

ARCHITECTURAL
A0.0 TITLE SHEET
A0.1 SITE PLAN
A0.2 E CENTER SITE PLAN
A0.3 ADA SITE DETAILS
A1.0 FOUNDATION PLAN
A1.1 FLOOR PLAN
A2.0 EQUIPMENT PLAN
A2.1 EQUIPMENT SCHEDULE
A3.0 NEW SEATING PLAN
A3.1 ROOF PLAN
A3.2 DOOR & WINDOW ELEVATION & SCHEDULES
A4.0 EXISTING EXTERIOR ELEVATIONS
A4.1 EXTERIOR ELEVATIONS
A4.2 EXTERIOR ELEVATIONS
A5.0 ROOF DEMO
A6.1 TOWER CONST DETAILS
A6.2 TOWER SECTION
A7.0 EXT. CONST. DETAILS
A7.1 EXT. CONST. DETAILS
A8.1 FINISH SCHEDULE
A8.2 ENT. KIT ELEVATION
A8.3 ENT. KIT ELEVATION
A9.0 REF. CLG. PLAN
A10.0 REFLECTED CLG. PLAN
A11.0 INT. CONST. DETAILS

ELECTRICAL
E0.1 SYMBOLS, SCHEDULES,DETAILS
E0.2 OUTDOOR TITLE 24
E0.3 INDOOR TITLE 24
E2.1 LIGHTING PLAN
E2.2 POWER & SIGNAL PLAN

MECHANICAL/PLUMBING
M0 MECHANICAL LEGEND,NOTES&TITLE24
M1 MECHANICAL FLOOR PLAN
P0 PLUMBING SCHEDULES / CALCS
P1 WASTE & VENT PIPING PLAN
P2 HOT & COLD WATER PLAN
P3 GAS & CONDENSATE PLAN

Revision columns: A B C D E F G H

SHEET INDEX

THE FRAZIER GROUP
DESIGN & DEVELOPMENT SERVICES
5165 DREDGER WAY
ORANGEVALE, CALIFORNIA
95662 (916) 761-9331

REGISTERED PROFESSIONAL ENGINEER WILLIAM ... CKABY NO. 16341 EXP. 6/30/11 CIVIL STATE OF CALIFORNIA

OFFICE

△2 bldg.8-21-09

A. ALL WORK SHALL CONFORM TO THE 2001 EDITION OF THE UNIFORM BUILDING CODE, AND ALL OTHER APPLICABLE CODES, STANDARDS, AND REGULATIONS OF THE CITY OF SAN JOSE AND COUNTY OF CONTRA COSTA.

B. IT IS INTENDED THAT A COMPLETE OCCUPIABLE BUILDING PROJECT IS PROVIDED.

C. THE GENERAL CONDITIONS OF THE CONTRACT FOR CONSTRUCTION (A.I.A. LATEST EDITION) ARE A PART OF THESE CONTRACT DOCUMENTS. A COPY IS ON FILE AT THE ARCHITECT'S OFFICE.

D. DUE TO THE NATURE OF THE WORK, ALL DIMENSIONS SHOWN SHALL BE CONSIDERED APPROXIMATE. CONTRACTOR SHALL FIELD VERIFY ALL DIMENSIONS PRIOR TO BEGINNING CONSTRUCTION. SHOP DRAWINGS SHALL BE SUBMITTED TO THE ARCHITECT FOR REVIEW PRIOR TO FABRICATION OF ANY ITEM. FAILURE TO ADHERE TO THIS PROCEDURE SHALL PLACE FULL RESPONSIBILITY FOR ANY ERRORS DIRECTLY UPON THE CONTRACTOR.

E. INFORMATION CONCERNING EXISTING BUILDING STRUCTURE, SIZE, LOCATION OF EQUIPMENT, FINISHES, ETC. WAS OBTAINED FROM VARIOUS PLANS FOR CONSTRUCTION OF THE EXISTING BUILDING. EVERY EFFORT HAS BEEN MADE TO ACCURATELY DEPICT EXISTING CONDITIONS, HOWEVER ALL WORK MUST BE VERIFIED IN THE FIELD PRIOR TO CONSTRUCTION. ANY CONFLICT BETWEEN THESE PLANS AND ACTUAL FIELD CONDITIONS SHALL BE REPORTED IMMEDIATELY TO THE ARCHITECT FOR VERIFICATION AND/OR CORRECTION.

F. DO NOT SCALE THESE DRAWINGS. VERIFY ALL DIMENSIONS AND CONDITIONS IN THE FIELD. ANY DISCREPANCIES IN THESE DRAWINGS SHALL BE BROUGHT TO THE ATTENTION OF THE ARCHITECT PRIOR TO STARTING WORK.

G. ALL PROPOSED SUBSTITUTIONS SHALL BE APPROVED BY THE YUM BRANDS REMODEL DESIGN ARCHITECT, IN WRITING, PRIOR TO INSTALLATION.

H. THE GENERAL CONTRACTOR SHALL USE EXTREME CAUTION IN DEMOLITION OF EXISTING CONSTRUCTION. ANY ITEM STRUCTURAL IN NATURE AND SCHEDULED FOR DEMOLITION IN THIS DRAWING BUT NOT IDENTIFIED AS STRUCTURAL IN NATURE SHALL BE VERIFIED WITH THE ARCHITECT PRIOR TO DEMOLITION. BY FAILURE TO DO SO, THE CONTRACTOR ASSUMES FULL RESPONSIBILITY FOR THE CONSEQUENCES OF SUCH ACTION.

I. G.C. IS RESPONSIBLE FOR SUBMITTAL, PAYING FEES AND OBTAINING ALL PERMITS ASSOCIATED WITH THE PROJECT EXCEPT GENERAL BUILDING PERMIT OR _________ (IF APPLICABLE). THIS INCLUDES, BUT IS NOT LIMITED TO ELECTRICAL, MECHANICAL, PLUMBING, FIRE SPRINKLER, HOOD ANSUL, OR OTHER RELATED FIRE PERMITS, ENCROACHMENT PERMIT, ETC. OWNER WILL PAY FOR "CONNECTION FEES" ASSOCIATED WITH UTILITY PERMITS. G.C. REQUIRED TO PAY FOR TEMPORARY FACILITIES FEES AS REQUIRED TO COMPLETE THE WORK IN A TIMELY MANNER.

J. G.C. SHALL PROVIDE EACH SUBCONTRACTOR WITH A COMPLETE AGENCY-PERMITTED DRAWING SET AT TIME OF CONSTRUCTION.

K. IT IS THE G.C.'S RESPONSIBILITY TO CONFIRM THE AVAILABLE "RESIDUAL" WATER PRESSURE, PRIOR TO THE START OF ANY WORK, AND NOTIFY THE OWNER IF THE AVAILABLE PRESSURE IS NOT ADEQUATE TO SERVICE THE ANSUL SYSTEM OR OTHER PRESSURE SENSITIVE EQUIPMENT. MINIMUM REQUIRED PRESSURE IS _________.

L. THE GENERAL CONTRACTOR SHALL REMOVE EXISTING TRIM AND SURFACES AS REQUIRED TO PROVIDE A PLUMB AND TRUE SURFACE SUITABLE FOR THE APPLICATION OF NEW WALL FINISHES.

M. ALL ABBREVIATIONS INCLUDED FOLLOW INDUSTRY STANDARDS. CONTACT ARCHITECT IF ANY ABBREVIATIONS ARE NOT CLEAR.

N. THE CONTRACTOR SHALL SHORE AND/OR UNDERPIN EXISTING WORK AS REQUIRED TO SAFELY INSTALL NEW WORK. THIS WORK SHALL BE THE FULL RESPONSIBILITY OF THE CONTRACTOR AND NO ACT, DIRECTION OR REVIEW OF ANY SYSTEM OR METHOD BY THE ARCHITECT SHALL CHANGE OR AFFECT THE CONTRACTOR'S RESPONSIBILITY IN THIS MATTER. DEFLECTION OF EXISTING TO BE LIMITED TO 1/8" IN ORDER TO MAINTAIN INTEGRITY OF STRUCTURE.

PROJECT GENERAL NOTES

Symbol	Meaning	Symbol	Meaning
NAME	ROOM NAME	X / AX.X	ELEV. LETTER / ELEV. SHEET
AX.X (1, 2, 3, 4)	SHEET NUMBER / ELEVATION NUMBER	(X)	DOOR NUMBER
		⟨X⟩	WINDOW NUMBER / DECOR ITEM NUMBER
8'-4"	CEILING HEIGHT	[X]	EXTERIOR WALL FINISH NUMBER
		(X)	KEY NOTE
X / AX.X	BLDG. SECTION LETTER / BLDG. SECTION SHEET	⟨X-000⟩	EQUIPMENT NUMBER
		XX	ROOM FINISH NUMBER
X / AX.X	DETAIL NUMBER / DIRECTION OF DETAIL / DETAIL SHEET	**X**	INTERIOR ELEVATION DESIGNATION
△X	REVISION NUMBER	X▷	SHEAR WALL TYPE (STRUCTURAL)
0'-0" ELEV	BLDG. HEIGHT REFERENCE POINT	(XXX|000)	EQUIPMENT / FIXTURE NUMBER (M.E.P.)

REFER TO STRUCTURAL, MECHANICAL, PLUMBING AND ELECTRICAL SHEETS FOR SPECIFIC SYMBOLS

GENERAL DRAWING SYMBOLS

APPLICABLE CODES △2

APPLICABLE CODES INCLUDE, BUT ARE NOT LIMITED TO:
2007 CALIFORNIA BUILDING CODE (TITLE 24, PART 2)
2007 CALIFORNIA MECHANICAL CODE (TITLE 24, PART 4)
2007 CALIFORNIA PLUMBING CODE (TITLE 24, PART 5)
2007 CALIFORNIA ELECTRICAL CODE (TITLE 24, PART 3)
2007 CALIFORNIA FIRE CODE (TITLE 24, PART 9)
2007 CALIFORNIA ENERGY CODE
AMERICANS WITH DISABILITIES ACT
ALL OTHER APPLICABLE LOCAL CODES, REGULATIONS AND ORDINANCES

TACO BELL OWNER
(Name) SANTA TERESA VILLAGE LLC
(Address) 777 N. FIRST ST
(City, State, Zip) SAN JOSE, CA.
Operating Brand:

CIVIL ENGINEER
(Name)
(Address)
(City, State, Zip) NOTE: IF REQUIRED
Contact:
Phone:

CONSTRUCTION MANAGER
(Name) THE FRAZIER GROUP
(Address) 5165 DREDGER WAY
(City, State, Zip) ORANGEVALE, CA 95662
Contact: WILL HARRIS
Phone: (916) 988-8364

STRUCTURAL ENGINEER
(Name) VE SOLUTIONS
(Address) 5845 WINDMILL WAY SUITE 'D'
(City, State, Zip) CARMICHAEL, CA
Contact: BRAD FREDERICHS
Phone: TEL. (916) 505-0519 FAX. (916) 482-1173 EMAIL: bradf@vesolutions.net

ARCHITECT
(Name) THE FRAZIER GROUP
(Address) 5165 DREDGER WAY
(City, State, Zip) ORANGEVALE, CA 95662
Contact: VILL HARRIS
Phone: (916) 988-8364

MECH. ENGINEER
(Name) SIGMA ENGINEERING
(Address) 3517 MARCONI AVE
(City, State, Zip) SACRAMENTO, CA
Contact: MEL TAROG
Phone: TEL. (916) 483-7343 FAX. (916) 483-4981 sigmaeng@earthlink.net

GEOTECHNICAL ENGINEER
(Name)
(Address)
(City, State, Zip) NOTE: IF REQUIRED
Contact:
Phone:

ELEC. ENGINEER
(Name) CHASE ELECTRICAL ENGINEERS
(Address) 5710 Garfield Ave.
(City, State, Zip) SACRAMENTO, CA
Contact: ROBERT ALONSO
Phone: TEL. (916) 483-7343 FAX. (916) 483-4981 dchase@chase-ee.com

PROJECT DIRECTORY

SEWER (Company) (Address) (City, State, Zip) Contact: Phone: EXISTING

TELEPHONE (Company) (Address) (City, State, Zip) Contact: Phone: EXISTING

WATER (Company) (Address) (City, State, Zip) Contact: Phone: EXISTING

ROADS (Company) (Address) (City, State, Zip) Contact: Phone: EXISTING

GAS (Company) (Address) (City, State, Zip) Contact: Phone: EXISTING

OTHER (Company) (Address) (City, State, Zip) Contact: Phone: EXISTING

ELECTRIC (Company) (Address) (City, State, Zip) Contact: Phone: EXISTING

OTHER (Company) (Address) (City, State, Zip) Contact: Phone: EXISTING

UTILITY CONTACTS

SAN JOSE CAPITAL OF SILICON VALLEY

CITY OF SAN JOSÉ, CALIFORNIA
Building Division Accessibility Compliance- Existing Buildings Form

I have surveyed the building at 170 BERNAL RD. for compliance with required accessibility features per the California Building Code. Proposed alteration work will include any upgrades required to provide compliance with accessibility features serving the area of work as described in section CBC 1134.2.1.
I acknowledge the following scope of required upgrades **(choose one)**

☐ The existing required accessibility features serving the area of work are in conformance with the CBC.

☑ Upgrades to the existing condition are proposed to provide full compliance with required accessibility features serving the area of work in conformance with the CBC.

☐ The feasibility of the proposed work will be severely impacted if full accessibility compliance is provided. Not all access features will be provided with the proposed scope of work, thus an Unreasonable Hardship determination must be granted. Upgrades will be provided for all features not excepted in the approved Hardship application.

Signature [signature] Date 10-12-09
I am: X Project Designer, ___ Business Owner, ___ Other______

ACCESSIBILITY ACCESS FORM

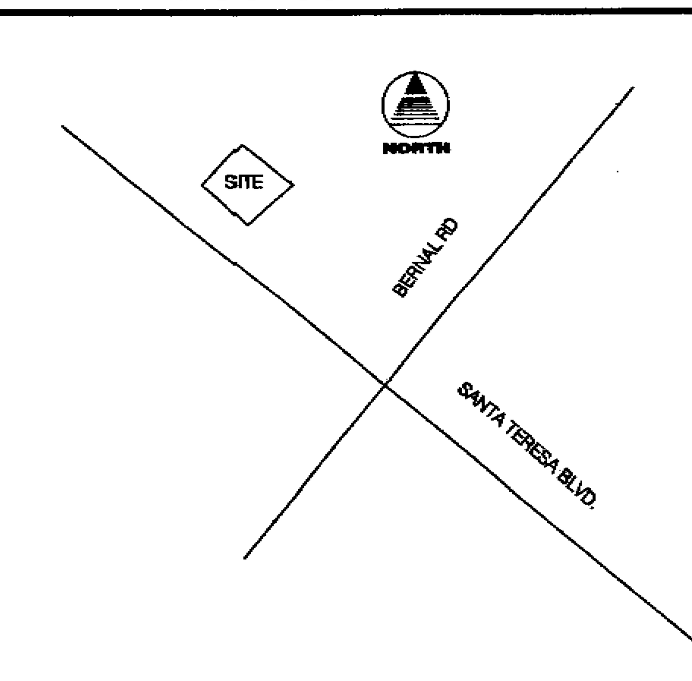

VICINITY MAP

TACO BELL
170 BERNAL RD
SAN JOSE, CA

BEPM09-042621

THIS DRAWING SHALL NOT BE CONSIDERED WHOLE OR ACCURATE UNTIL SIGNED BY THE ARCHITECT.

CONTACT DATE:
BUILDING STYLE
PLAN VERSION:
SITE NUMBER
TFG NUMBER
WORK DATE:
ISSUE DATE:

12/1/09

09-025971 5 BDDJ

TACO BELL

COVER SHEET
TITLE SHEET
A0.0

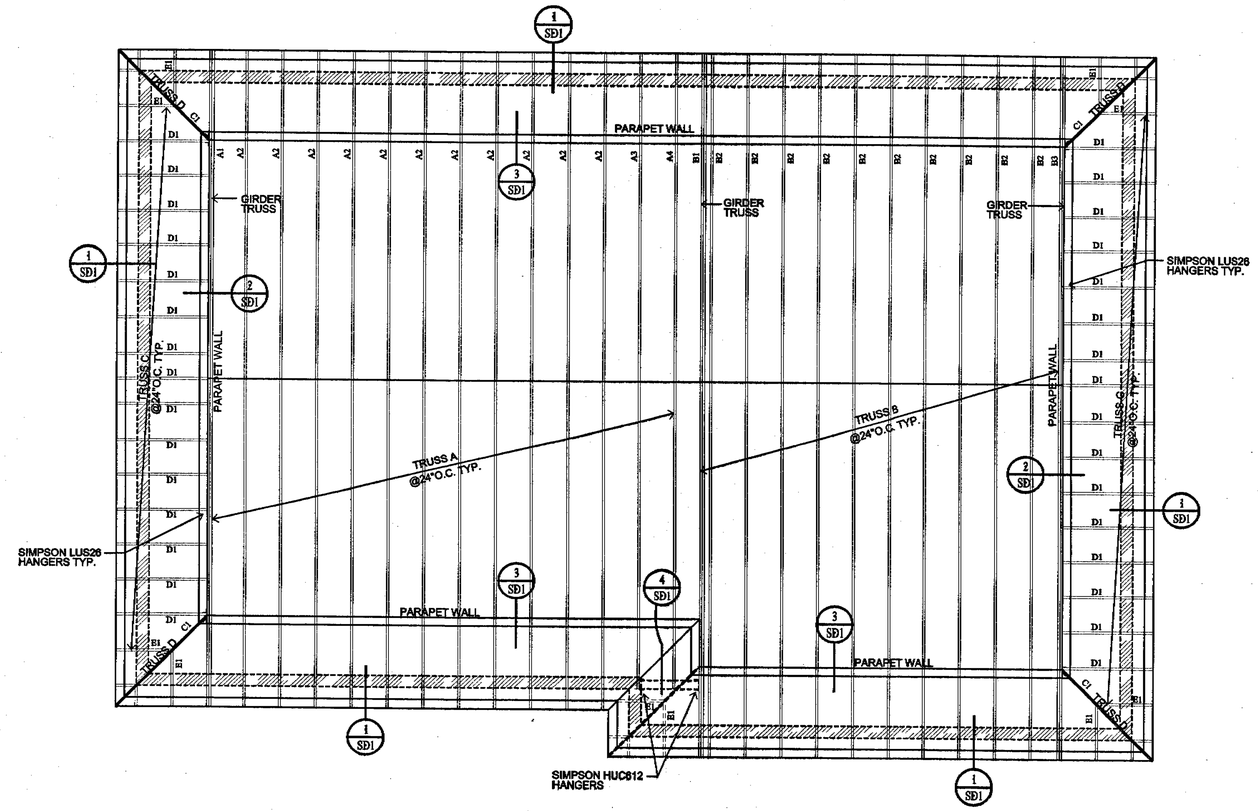

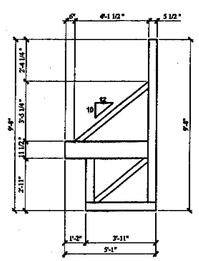

TRUSS TYPE C AND D

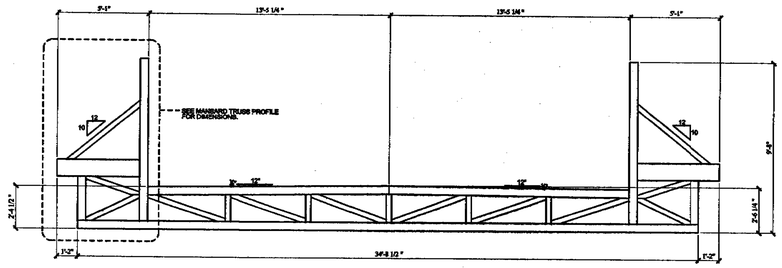

TRUSS TYPE A

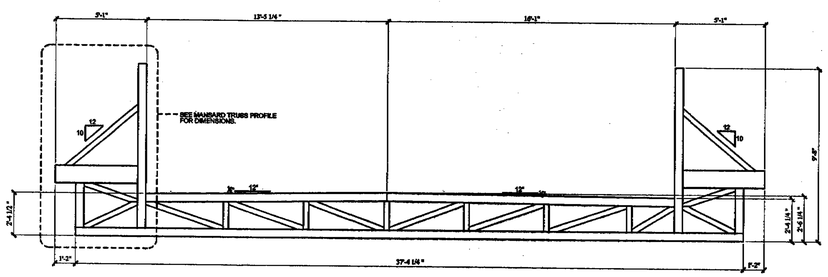

TRUSS TYPE B

ROOF FRAMING PLAN

SCALE: 1/4"=1'-0"

GENERAL SPECIFICATIONS

ALL TRUSSES TO BE 24" O.C. -TYPICAL

LOADING	ROOF LIVE LOAD	20 PSF
	ROOF DEAD LOAD	14 PSF
	CEILING LIVE LOAD	10 PSF
	CEILING DEAD LOAD	7 PSF
	CEILING LIVE LOAD NON CONCURENT WITH ROOF LIVE LOAD.	
	DURATION INCREASE	25%

ROOF SHEATHING TO BE 15/32" MIN. APA RATED SHEATHING. NAIL 8d @ 6" OC EDGE AND 8d @ 12" OC FIELD MINIMUM. PANEL ID 32/16. FACE GRAIN PERPENDICULAR TO FRAMING, AND AS NOTED ON PLAN.

FOR NAILING NOT SHOWN, SEE NAILING SCHEDULE SHEET SC-1 OR TABLE 2304.9.1 2007 CBC.

NAIL ROOF SHEATHING AT ALL DRAG TRUSSES WITH 8d @ 6" O.C. TYP. U.N.O.

ROOF DESIGNED FOR TILE LOADS (10 PSF MAX).

TRUSS MANUFACTURER TO SUPPLY TRUSS DRAWINGS AND LAYOUTS TO THE PROJECT ENGINEER AND BUILDING DEPARTMENT PRIOR TO CONSTRUCTION AS PART OF DEFERRED SUBMITTAL PER SECTION 106.3.4.2, 2007 CBC

DOUBLE TOP PLATE, MIN. 48" SPLICES. NAIL WITH (12)-16d NAILS EACH SIDE OF LAP.

ALL HEADERS AND BEAMS TO BE AS SPECIFIED ON THIS SHEET, INTERIOR NON BEARING HEADERS TO BE 4X4 OR DBL. 2X4 NO.2 D.F.L.

ALL NAILS TO BE COMMON WIRE NAILS UNLESS NOTED OTHERWISE.

INSTALL 2X / 4X HOLDOWN POST AT ENDS OF ALL SHEAR WALLS PER PLAN. SEE TABLE AND CALCULATIONS FOR HOLDOWN STUD SIZE REQUIRED.

ALL HANGERS, HOLDOWNS, CLIPS, AND STRAPS TO BE SIMPSON STRONG-TIE OR SILVER / KANT-SAG SILVER WITH REF. # MATCHING SIMPSON SPECIFICATIONS.

DENOTES STRUCTURAL DETAILS ON SHEET SD.1 THRU SD...

FOR ADDITIONAL SPECIFICATIONS AND TYPICAL DETAILS SEE SHEET SC-1.

IT IS THE CONTRACTOR'S RESPONSIBILITY TO REVIEW ALL OF THE NOTES AND TYPICAL DETAILS ON SHEET SC-1 SO THAT THEY MAY BE INCORPORATED INTO THE CONSTRUCTION OF THIS STRUCTURE.

ALL GABLE STUDS LONGER THAN 6'-0" TO BE 2X4 #1 & BTR. D.F.L. IF STUDS ARE LONGER THAN 10'-0" USE 2X6 #2 D.F.L. STRUCTURAL GABLE END TRUSSES WITH MORE THAN 6'-0" ON THE VERTICAL PROJECTION REQUIRE BRACES PER STRUCTURAL GABLE END DETAIL ON SHEET SC-1.

2X BLOCKING AT RIDGE BETWEEN EACH TRUSS.

SPECIFICATIONS

CITY OF SAN JOSE
BUILDING DIVISION
B.P.# _____
DATE _____

COPYRIGHT 2003 NORMAN SCHEEL STRUCTURAL ENGINEER

97 CBC

Norman Scheel Structural Engineer
Sacramento Office
5022 Sunrise Blvd.
Fair Oaks, CA 95628
(916) 536-9585
(916) 536-0260 (fax)

1989 - 2009 20 YEARS OF EXCELLENCE Norman Scheel Structural Engineer

TACO BELL
SAN JOSE, CA

WILL HARRIS
5165 DREDGER WAY
ORANGEVILLE, CA 95662

PROJ. MGR.:	R.C.
ENGINEER:	R.C.
DRAWN BY:	R.C. / K.T.
CHECKED BY:	R.C.
ISSUE DATE:	6-8-09
REVISIONS:	

REGISTERED PROFESSIONAL ENGINEER NORMAN J. SCHEEL No. 2567 Exp. 12-31-09 STRUCTURAL STATE OF CALIFORNIA

6/8/2009

SHEET

S1B

ROOF FRAMING

JOB NO. 29084

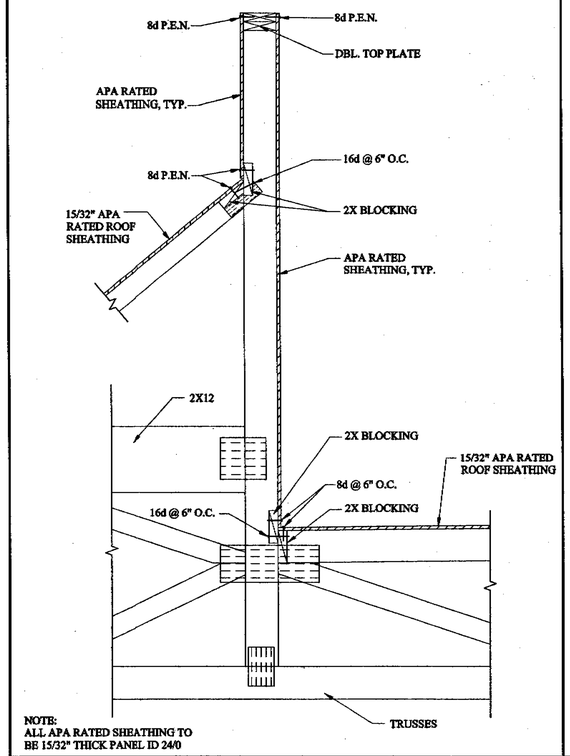

NOTE:
ALL APA RATED SHEATHING TO BE 15/32" THICK PANEL ID 24/0

3 ROOF FRAMING DETAIL

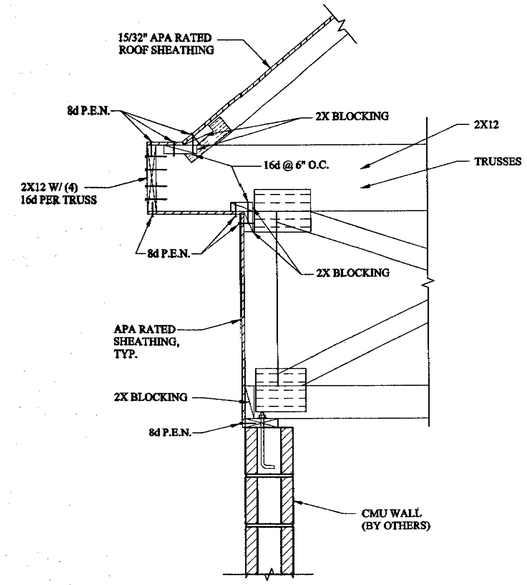

NOTE:
ALL APA RATED SHEATHING TO BE 15/32" THICK PANEL ID 24/0

1 ROOF FRAMING DETAIL

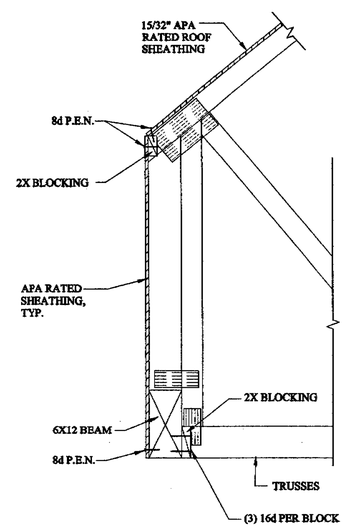

NOTE:
ALL APA RATED SHEATHING TO BE 15/32" THICK PANEL ID 24/0

4 ROOF FRAMING DETAIL

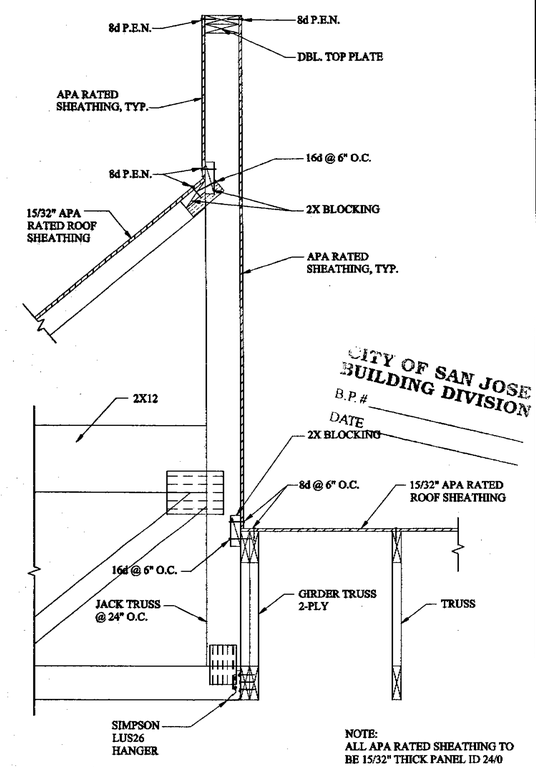

CITY OF SAN JOSE
BUILDING DIVISION
B.P.#
DATE

NOTE:
ALL APA RATED SHEATHING TO BE 15/32" THICK PANEL ID 24/0

2 ROOF FRAMING DETAIL

COPYRIGHT 2003 NORMAN SCHEEL STRUCTURAL ENGINEER

Norman Scheel Structural Engineer
Sacramento Office
5022 Sunrise Blvd.
Fair Oaks, CA 95628
(916) 536-9585
(916) 536-0260 (fax)

1989 - 2008 20 YEARS OF EXCELLENCE Norman Scheel Structural Engineer

TACO BELL
SAN JOSE, CA

WILL HARRIS
5165 DREDGER WAY
ORANGEVILLE, CA 95662

PROJ. MGR.: R.C.
ENGINEER: R.C.
DRAWN BY: R.C./K.T.
CHECKED BY: R.C.

ISSUE DATE:
6-8-09

REVISIONS:

REGISTERED PROFESSIONAL ENGINEER NORMAN SCHEEL No. 2567 Exp. 12-31-09 STRUCTURAL STATE OF CALIFORNIA

6/8/2009

SHEET
SD-1
STRUCTURAL DETAILS

JOB NO. 29084

6/8/2009 3:52:29 PM ...\29084_Struct_model.dgn

ABREVIATIONS:

ADDNL	ADDITIONAL	GAF	GALVANIZE AFTER FABRICATION
AB	AGGREGATE BASE, ANCHOR BOLT	GALV	GALVANIZED
AL	ALUMINUM	GC	GENERAL CONTRACTOR
ARCH	ARCHITECTURAL	GS	GALVANIZED STEEL
BETW	BETWEEN	HR	HANDRAIL
BEV	BEVELLED	HA	HEADED ANCHOR
BLKG	WOOD BLOCKING	H	HIGH
BM	BEAM	HSB	HIGH STRENGTH BOLT
BOTT	BOTTOM	HORIZ	HORIZONTAL
BRG	BEARING	KP	KICK PLATE
CHKD PL	CHECKERED	L	LONG
PLATE CLR	CLEAR	LS	LAG SCREW
℄	CENTERLINE	MANUF	MANUFACTURER
C.C.	CENTER TO CENTER	MAX	MAXIMUM
CMU	CONCRETE MASONRY UNIT	MB	MACHINE BOLT
COL	COLUMN	MECH	MECHANICAL
CONC	CONCRETE	MIN	MINIMUM
CONSTR JT	CONSTRUCTION JOINT	NTS	NOT TO SCALE
CONT	CONTINUOUS	OH	OPPOSITE HAND
CJ	CONTROL JOINT, CONTRACTION JOINT	ℙ	PLATE
db	BAR DIAMETER	PTDF	PRESSURE TREATED DOUGLAS FIR
DIA	DIAMETER	REINF	REINFORCING
DIM	DIMENSION	REQ'D	REQUIRED
DN	DOWN	REQMT'S	REQUIREMENTS
EA	EACH	SAD	SEE ARCHITECTURAL DRAWINGS
EF	EACH FACE	SIM	SIMILAR
EJ	EXPANSION JOINT	SOG	SLAB ON GRADE
EL, (ELEV)	ELEVATION	SP	STRUCTURAL PLYWOOD
EWF	ELECTRICALLY WELDED FABRIC	SS	STAINLESS STEEL
EWEF	EACH WAY EACH FACE	STIFF	STIFFENER
EQ	EQUAL	STAGG	STAGGER
EQUIP	EQUIPMENT	SQ	SQUARE
EN	EDGE NAILING	SYMM	SYMMETRICAL
ES	EACH SIDE	T&B	TOP AND BOTTOM
EW	EACH WAY	TOB	TOP OF BLOCK
FB	FACE OF BLOCK	TOC	TOP OF CONCRETE
FC	FACE OF CONCRETE	TOM	TOP OF MASONRY
FD	FLOOR DRAIN	TOS	TOP OF STEEL
FF	FACE OF FRAMING	TOW	TOP OF WALL
FIN FLR	FINISHED FLOOR	TS	TUBE STEEL
FIN GRD	FINISHED GRADE	TYP	TYPICAL
FLG	FLANGE	UNO (UON)	UNLESS NOTED OTHERWISE
FOM	FACE OF MASONRY	VERT	VERTICAL
FN	FIELD NAILING	W	WIDE
FS	FACE OF STUD	WHS	WELDED HEADED STUD
FTG	FOOTING	WP	WORKING POINT
GA	GAGE	WS	WATERSTOP

DESIGN CRITERIA:

△1

1. CODES AND STANDARDS:
   - 2007 CALIFORNIA BUILDING CODE (CBC)
   - ASCE 7-05
   - ACI 318-05
   - 2005 NDS
2. VERTICAL LOADS:
   - ROOF LIVE LOAD= 20 PSF
   - LIVE LOADS ARE REDUCED WHERE PERMITTED BY CODE
   - ROOF DEAD LOAD= 18 PSF
   - ROOF DEAD LOAD= 28 PSF (AT TILE ROOF)
3. LATERAL LOADS:
   - SEISMIC:

SITE CLASS=D	OCCUPANCY CATEGORY= II
S_s=1.562	SEISMIC DESIGN CATEGORY= D
S_{ds}=1.040	SEISMIC FORCE RESISTING SYSTEM= LIGHT FRAMED
S_1=0.600	WALLS SHEATHED WITH WOOD STRUCTURAL PANELS RATED
S_{d1}=0.600	FOR SHEAR RESISTANCE
R=6.5	
I=1.0	

4. SOIL VALUES:
   - ALLOWABLE SOIL PRESSURE DL & LL= 1,000 PSF
   - FOOTING
     - MINIMUM DEPTH= 18"
     - MINIMUM WIDTH= 12"
5. WIND:
   - BASIC WIND SPEED= 85 MPH
   - EXPOSURE CATEGORY= C
   - Iw= 1.0

GENERAL NOTES:

1. TYPICAL DETAILS AND NOTES SHALL APPLY UNLESS OTHERWISE SHOWN OR NOTED ON PLANS.
2. DETAILS OF CONSTRUCTION NOT FULLY SHOWN SHALL BE OF THE SAME NATURE AS SHOWN FOR SIMILAR CONDITION.
3. CONSTRUCTION SHALL CONFORM TO ALL APPLICABLE CODES AND REGULATIONS.
4. PRIOR TO FABRICATION, SHOP DRAWINGS SHALL BE SUBMITTED FOR REVIEW BY THE ENGINEER ON ALL REINFORCING STEEL. SHOP DRAWINGS:
   CONTRACTOR AGREES THAT SHOP DRAWING SUBMITTALS PROCESSED BY THE ENGINEER ARE NOT CHANGE ORDERS AND THAT THE PURPOSE OF SHOP DRAWING SUBMITTALS BY THE CONTRACTOR IS TO DEMONSTRATE TO THE ENGINEER THAT THE CONTRACTOR UNDERSTANDS THE DESIGN CONCEPT BY INDICATING WHICH MATERIAL HE INTENDS TO FURNISH AND INSTALL AND BY DETAILING THE FABRICATION AND INSTALLATION METHODS HE INTENDS TO USE.
5. SAFETY NOTE:
   IT IS THE CONTRACTOR'S RESPONSIBILITY TO COMPLY WITH THE PERTINENT SECTIONS OF THE A) "CONSTRUCTION SAFETY ORDERS" ISSUED BY THE STATE OF CALIFORNIA, LATEST EDITION, AND ALL OSHA REQUIREMENTS AS THEY APPLY TO THIS PROJECT. THE ENGINEER AND THE OWNER DO NOT ACCEPT ANY RESPONSIBILITY FOR THE CONTRACTOR'S B) FAILURE TO COMPLY WITH THESE REQUIREMENTS. THE CONTRACTOR SHALL BE RESPONSIBLE FOR ADEQUATE DESIGN AND CONSTRUCTION OF ALL C) FORMS AND SHORING REQUIRED.
6. CONTRACTOR SHALL VERIFY ALL DIMENSIONS, ELEVATIONS, PROPERTY LINES, ETC. ON THE JOB.
7. CONTRACTOR SHALL NOTIFY THE ENGINEER WHERE A CONFLICT OCCURS ON ANY OF THE CONTRACT DRAWINGS OR DOCUMENTS. CONTRACTOR IS NOT TO ORDER MATERIAL OR CONSTRUCT ANY PORTION OF STRUCTURES THAT IS IN CONFLICT UNTIL CONFLICT IS RESOLVED WITH THE AFFECTED PARTIES.

CONCRETE AND REINFORCING STEEL:

1. CONCRETE CONSTRUCTION SHALL CONFORM TO ACI 318-05.
2. THE MINIMUM 28 DAY STRENGTH AND TYPE OF CONCRETE SHALL BE AS FOLLOWS:
   CONCRETE . . . . . .150 PCF, F'c = 2500 PSI (MINIMUM 5½ SACKS CEMENT PER CU. YD.)
3. CEMENT SHALL CONFORM TO ASTM C-150 TYPE II.
4. CONCRETE AGGREGATES: NATURAL SAND AND ROCK AGGREGATES CONFORMING TO ASTM C-33.
5. REINFORCING SHALL CONFORM TO ASTM A615 GRADE 60, EXCEPT #3 & #4 STIRRUPS AND TIES MAY BE GRADE 40.
6. WELDING OF REINFORCING STEEL SHALL CONFORM TO AWS D1.4 USING PROPER LOW HYDROGEN ELECTRODES. TACK WELDING TO REBAR IS STRICTLY PROHIBITED. SEE "REBAR WELDING".
7. REINFORCING STEEL SHALL BE DETAILED, FABRICATED, AND INSTALLED ACCORDING TO "MANUAL OF STANDARD PRACTICE FOR REINFORCED CONCRETE CONSTRUCTION" BY WCRSI.
8. WIRE FABRIC SHALL CONFORM TO ASTM A-185.
9. DIMENSIONS SHOWN FOR LOCATION OF REINFORCING ARE TO THE FACE OF MAIN BARS AND DENOTE CLEAR COVERAGE. UNLESS OTHERWISE NOTED, CONCRETE COVERAGE SHALL BE AS FOLLOWS:

CONCRETE DEPOSITED DIRECTLY AGAINST GROUND (EXCEPT SLABS)	3"
FORMED CONCRETE EXPOSED TO WEATHER OR GROUND OR LIQUID	
#6 AND LARGER	2"
#5 AND SMALLER	2"
BEAMS (TOP BARS)	1½"
BEAMS (ALL OTHER MAIN REINFORCING)	2"
COLUMN MAIN REINFORCING	2"
WALLS AND SLABS (INTERIOR DRY FACES)	¾"
SLABS ON GROUND WITH ONE LAYER OF REINFORCEMENT	POSITION IN CENTER OF SLAB

10. A) ALL BARS SHOWN WITH LAPS OR SPLICES SHALL HAVE MIN LAP LENGTH UNLESS OTHERWISE NOTED.
    B) DOWEL ALL VERTICAL REBARS IN WALLS AND COLUMNS FROM FOUNDATION WITH SAME SIZE BAR.
    C) SPLICES IN ADJACENT BARS SHALL BE NOT LESS THAN 5'-0" APART.
    D) SPLICE CONTINUOUS BARS IN SOIL-BEARING GRADE BEAMS AS FOLLOWS: BOTTOM BARS AT MID-SPAN, TOP BARS AT CENTERLINE OF SUPPORT, UNLESS NOTED OTHERWISE.
    E) SPLICE CONTINUOUS BARS IN BEAMS, SPANDRELS, WALL BEAMS ETC. AS FOLLOWS: BOTTOM BARS AT CENTERLINE OF SUPPORT, TOP BARS AT MIDSPAN, UNLESS NOTED OTHERWISE.
    F) REINFORCING BARS SHALL BE RUN IN A MANNER THAT FORMS A CONTINUOUS SYSTEM OF BARS TYING ALL PARTS OF THE STRUCTURE TOGETHER. EXTEND ALL REINFORCING BARS AS FAR AS POSSIBLE IN EACH CONCRETE MEMBER AND TERMINATE BAR TO PROVIDE 2" OF CONCRETE COVER OVER END OF BAR OR FACE OR BEND.
    G) BEAM STIRRUPS AND COLUMN TIES SHALL HOOK 135 DEGREES AROUND A CORNER BAR UNLESS NOTED OTHERWISE.
11. GENERAL:
    A) NO PIPES OR DUCTS SHALL BE PLACED IN CONCRETE SLABS, BEAMS, WALLS OR GRADE BEAMS UNLESS SPECIFICALLY DETAILED.
    B) REFER TO ARCHITECTURAL, STRUCTURAL, ELECTRICAL AND MECHANICAL DRAWINGS FOR ALL OPENINGS, FLANGES, MOULDS, GROOVES, CLIPS AND GROUNDS TO BE CAST IN CONCRETE.
12. CONSTRUCTION JOINTS SHALL BE MADE ROUGH AND ALL LAITANCE REMOVED FROM THE SURFACE. CONCRETE MAY BE ROUGHENED BY CHIPPING THE ENTIRE SURFACE, SANDBLASTING, OR HOSING THE SURFACE 4 TO 6 HOURS AFTER THE POUR WITH A FINE SPRAY.
13. REMOVE ALL DEBRIS FROM THE FORMS BEFORE PLACING ANY CONCRETE.
14. REINFORCING, DOWELS, BOLTS, ANCHORS, SLEEVES, ETC. TO BE EMBEDDED IN CONCRETE SHALL BE SECURELY POSITIONED BEFORE PLACING CONCRETE. OBTAIN APPROVAL OF ALL AFFECTED TRADES PRIOR TO PLACING CONCRETE.
15. MAXIMUM FREE FALL OF CONCRETE SHALL BE 4'-0".
16. WALLS SHALL BE PLACED IN HORIZONTAL LAYERS OF 2'-0" MAX DEPTH.
17. CONCRETE IN WALLS, PIERS, OR COLUMNS SHALL SET AT LEAST 2 HOURS BEFORE PLACING CONCRETE IN BEAMS, SPANDRELS, OR SLABS SUPPORTED THEREON.
18. REINFORCE ALL SLABS ON GRADE AS SHOWN ON DRAWINGS.
19. HORIZONTAL WALL BARS IN DOUBLE LAYER WALLS SHALL BE STAGGERED. USE #2 SPREADERS APPROXIMATELY EVERY THIRD INTERSECTION EACH DIRECTION FOR ALL DOUBLE LAYER WALLS. PLACE SPREADERS IN VERTICAL LINES WITH FORM TIES.
20. NO WOOD SPREADERS ARE ALLOWED. NO WOOD STAKES ARE ALLOWED IN AREAS TO BE CONCRETED.
21. MINIMUM WALL REINFORCING SHALL BE:

WALL THICKNESS	SINGLE LAYER	DOUBLE LAYER
7" OR LESS	#4 @ 12" OC EW	
8"	#4 @ 10" OC EW	
9" AND 10"		#4 @ 16" OC EW
11" AND 12"		#4 @ 12" OC EW

22. CONCRETE MIX DESIGN SHALL BE SUBMITTED FOR ENGINEER'S REVIEW PRIOR TO PLACING CONCRETE.
23. NOTIFY THE ENGINEER 48 HOURS PRIOR TO PLACING CONCRETE.
24. REINFORCEMENT LAP SPLICE LENGTHS ARE:

	TOP BARS	OTHER BARS
#6 OR SMALLER	53db	40db
#7 OR LARGER	66db	51db

TOP REINFORCING IS HORIZONTAL REINFORCEMENT THAT HAS MORE THAN 12" OF CONCRETE PLACED BELOW IT.

25. MAXIMUM SPACING OF WALL CONST. JOINTS IS 30 FT.

FOUNDATIONS:

1. FROST DEPTH 12".
2. BEARING SOIL IS CLASSIFIED AS: SEE GEOTECHNICAL ENGINEERING REPORT.
3. THE FOOTINGS SHALL BEAR ON FIRM, DRY NATIVE MATERIAL OR ENGINEERED FILL WITH A MINIMUM PENETRATION OF 18 INCHES. SEE GEOTECH REPORT.
4. EXCAVATIONS SHALL BE CLEANED OF ALL DEBRIS. STANDING WATER SHALL BE REMOVED.
5. ALL FOOTINGS SHALL BE FORMED. FOUNDATIONS MAY BE PLACED IN NEAT EXCAVATIONS PROVIDED WRITTEN PERMISSION IS OBTAINED FROM THE ENGINEER AND FOOTINGS ARE INCREASED 2" IN WIDTH. SEE TYPICAL DETAIL.
6. NOTIFY THE ENGINEER 48 HOURS BEFORE PLACING FOUNDATIONS.

WOOD:

(SUBMIT SHOP DRAWINGS BEFORE FABRICATION OF GLU-LAM MEMBERS)

1. ALL STRUCTURAL WOOD SHALL CONFORM WITH THE FOLLOWING SPECIFICATIONS:
   - DOUGLAS FIR - COAST REGION_____WEST COAST LUMBER INSPECTION BUREAU GRADING RULE #16.
   - REDWOOD_____CALIFORNIA REDWOOD ASSOCIATION GRADING RULES, 1987 EDITION.
   - GLUED LAMINATED BEAMS_____STANDARD SPECIFICATION FOR STRUCTURAL GLUE LAMINATED TIMBER, AITC 117-84
   - PLYWOOD_____U.S. PRODUCT STANDARDS PS 1-83 FOR SOFT PLYWOOD.
2. MINIMUM GRADES SHALL BE:
   - STRUCTURAL FRAMING:
     - MEMBERS UP TO 4" THICK___DF#1, 19% MAXIMUM MOISTURE CONTENT.
     - MEMBER 4" THICK & LARGER_DF#1, FREE OF HEART CENTER
     - GLUED LAMINATED MEMBERS___COMBINATION 24F-V4 FOR SIMPLE SPANS AND COMBINATION 24F-V8 FOR CANTILEVERS AND CONTINUOUS CONDITIONS. ALL BEAMS SHALL HAVE 1600 FT RADIUS CAMBER UNO.
   - STRUCTURAL PLYWOOD_____WALL PLYWOOD: 3/8" APA RATED SHEATHING. 32/, EXPOSURE 1, OR EQUIVALENT APA RATED OSB. FLOOR PLYWOOD: 5/8" T&G APA RATED SHEATHING, 32/16, 5 PLY, EXPOSURE 1, OR EQUIVALENT APA RATED OSB. ROOF PLYWOOD: 1/2" APA RATED SHEATHING, 5 PLY, 24/0, EXPOSURE 1, OR EQUIVALENT APA RATED OSB.
   - PSL (PARALLEL STRAND LUMBER)____2.0E PARALLAM® PSL MANUFACTURED BY TRUSS JOIST MacMILLAN.
3. WALLS SHALL HAVE DOUBLE TOP PLATES, LAPPED AT WALL AND PARTITION INTERSECTION WITH 3-16d NAILS. SPLICE UPPER AND LOWER PLATES AS SHOWN IN TYPICAL DETAIL, TYPICAL UNO.
4. PROVIDE SOLID BLOCKING BETWEEN JOISTS OR RAFTERS AT ALL SUPPORTS.
5. CUTTING OF WOOD JOISTS SHALL BE LIMITED TO CUTS AND BORED HOLES NOT DEEPER THAN ONE-FIFTH THE JOIST DEPTH FROM THE TOP, AND LOCATED NOT FARTHER FROM THE END THAN THREE TIMES THE JOIST DEPTH. SEE TYPICAL DETAIL.
6. WHEN TOP PLATES ARE NOTCHED - SEE TYPICAL DETAIL.
7. HOLES FOR BOLTS IN WOOD SHALL BE BORED WITH A BIT OF THE SAME NOMINAL DIAMETER AS THE BOLT + 1/16".
8. HOLES FOR LAG SCREWS SHALL BE FIRST BORED TO THE SAME NOMINAL DIAMETER AND DEPTH AS THE SHANK. THE REMAINDER OF THE HOLE SHALL BE NO LARGER THAN THE ROOT OF THE THREAD.
9. LAG SCREWS AND WOOD SCREWS SHALL BE SCREWED AND NOT DRIVEN INTO PLACE.
10. ALL BOLTS AND LAG SCREWS SHALL BE PROVIDED WITH METAL WASHERS UNDER HEADS AND NUTS WHICH BEAR ON WOOD. APPLIES ALSO TO INSERTED EXPANDING FASTENERS - RED HEAD, ETC.
11. ALL BOLT AND LAG SCREWS SHALL BE TIGHTENED AT TIME OF INSTALLATION AND RE-TIGHTENED BEFORE CLOSING IN OR AT COMPLETION OF JOB.
12. LAY ALL STRUCTURAL PLYWOOD ON ROOF AND FLOORS WITH FACE GRAIN PERPENDICULAR TO SUPPORTS.
13. BLOCK SP JOINTS WITH 2x4 FLAT BLOCKING WHERE NOTED ON FRAMING PLANS AND WITH BLOCKING SAME SIZE AS STUDS AT WALLS.
14. CROSS BRIDGING BETWEEN JOISTS OR RAFTERS - SEE FRAMING PLANS AND TYPICAL DETAIL.
15. JOISTS UNDER AND PARALLEL TO PARTITIONS SHALL BE DOUBLED AND NAILED TOGETHER.
16. PROVIDE BLOCKING AT ALL CEILING LEVELS.
17. WHERE FRAMING HANGERS ARE REQUIRED AND ARE NOT SHOWN ON SECTIONS, DETAILS OR PLANS THE FOLLOWING SIMPSON HANGERS SHALL BE USED. SLOPE, SKEW, TURN IN FLANGES AND PROVIDE TOP FLANGE HANGERS AS REQUIRED.
    - 2x & 3x MEMBERS_____U HANGERS
    - 4x MEMBERS_____HU HANGERS
    - 6x MEMBERS_____HUTF HANGERS
    - TJI MEMBERS_____MIT HANGERS
    - GLU LAM MEMBERS_____LEG HANGERS
18. ALL METAL HARDWARE SHALL BE MANUFACTURED BY SIMPSON STRONG TIE COMPANY. ALL ITEMS SHALL BE INSTALLED PER SIMPSON SPECIFICATIONS.
19. ALL SPLIT, TWISTED OR OTHERWISE DAMAGED MATERIAL SHALL BE REPLACED.
20. ALL WOOD IN CONTACT WITH CONCRETE OR MASONRY SHALL BE PRESSURE TREATED.
21. ALL NAILS TO BE COMMON WIRE.

INSPECTION NOTES:

A. NON-SEISMIC SPECIAL INSPECTIONS:
THE SPECIAL INSPECTIONS CHECKED BELOW SHALL BE PERFORMED IN ACCORDANCE WITH CHAPTER 17 OF THE IBC. OCCUPANCY CATEGORY AND SEISMIC DESIGN CATEGORY SHALL BE AS DELINIATED ON THESE PLANS.

1. ☐ STRUCTURAL STEEL: PERFORM INSPECTIONS IN ACCORDANCE WITH SECTION 1704.3.
2. ☑ CONCRETE CONSTRUCTION: PERFORM SPECIAL INSPECTIONS IN ACCORDANCE WITH SECTION 1704.4.
3. ☑ MASONRY CONSTRUCTION: PERFORM SPECIAL INSPECTIONS IN ACCORDANCE WITH SECTION 1704.5.2.
4. ☑ WOOD CONSTRUCTION: SPECIAL INSPECTION OF PREFABRICATED AND SITE-BUILT ASSEMBLIES IN ACCORDANCE WITH SECTION 1704.6.
5. ☑ SOILS: SPECIAL INSPECTIONS IN ACCORDANCE WITH SECTION 1704.7.
6. ☐ PILE FOUNDATIONS: SPECIAL INSPECTIONS IN ACCORDANCE WITH SECTION 1704.8.
7. ☐ PIER FOUNDATIONS: SPECIAL INSPECTIONS IN ACCORDANCE WITH SECTION 1704.9.

B. SPECIAL INSPECTIONS FOR SEISMIC RESISTANCE:
IN ADDITION TO THE INSPECTIONS INDICATED ABOVE, THE SPECIAL INSPECTIONS INDICATED BELOW SHALL BE PERFORMED FOR THE FOLLOWING DESIGNATED SEISMIC-FORCE-RESISTING SYSTEMS:

1. ☐ STEEL TRUSS MOMENT FRAMES.
2. ☐ STEEL MOMENT FRAMES.
3. ☐ STEEL BRACED FRAMES.
4. ☑ WOOD STRUCTURAL SHEAR WALLS.
5. ☑ OTHER SYSTEMS DESIGNATED BY "SI".
6. ☐ STRUCTURAL STEEL: PERFORM CONTINUOUS SPECIAL INSPECTION OF SEISMIC FORCE RESISTING SYSTEMS IN ACCORDANCE WITH SECTION 1707.2.
7. ☑ STRUCTURAL WOOD: CONTINUOUS SPECIAL INSPECTION IN ACCORDANCE WITH SECTION 1707.3.
8. ☑ COLD-FORMED STEEL FRAMING: PERIODIC SPECIAL INSPECTION IN ACCORDANCE WITH SECTION 1707.4.
9. ☐ PIER FOUNDATIONS: PERIODIC SPECIAL INSPECTION IN ACCORDANCE WITH SECTION 1707.5.
10. ☐ STORAGE RACKS AND ACCESS FLOORS: PERIODIC SPECIAL INSPECTION IN ACCORDANCE WITH SECTION 1707.6.
11. ☐ ARCHITECTURAL COMPONENTS: PERIODIC SPECIAL INSPECTION IN ACCORDANCE WITH SECTION 1707.7.
12. ☐ MECHANICAL AND ELECTRICAL COMPONENTS: SPECIAL INSPECTION IN ACCORDANCE WITH SECTION 1707.8.
13. ☐ DESIGNATED SEISMIC SYSTEM VERIFICATION: VERIFICATION OF SEISMIC SYSTEMS IN ACCORDANCE WITH SECTION 1707.9.

C. STRUCTURAL TESTING FOR SEISMIC RESISTANCE:
IN ADDITION TO THE INSPECTIONS AND TESTS LOCATED IN ITEM A & B, THE FOLLOWING TESTS SHALL BE PERFORMED WHERE CHECKED:

1. ☐ EMPIRICALLY DESIGNED MASONRY: TESTING AND VERIFICATION OF MASONRY MATERIALS IN ACCORDANCE WITH SECTION 1708.1.1.
2. ☐ ENGINEERED MASONRY: TESTING AND VERIFICATION IN ACCORDANCE WITH SECTION 1708.1.3 AND TABLE 1708.1.2.
3. ☐ REINFORCING AND PRESTRESSING STEEL: TEST REQUIREMENTS IN ACCORDANCE WITH SECTION 1708.3.
4. ☐ STRUCTURAL STEEL: TESTING IN ACCORDANCE WITH SECTION 1708.4 SEISMIC QUALIFICATION OF MECHANICAL AND ELECTRICAL EQUIPMENT: AS STATED ON THE PLANS.
5. ☐ STRUCTURAL OBSERVATIONS: THE OWNER SHALL EMPLOY A REGISTERED DESIGN PROFESSIONAL TO PERFORM STRUCTURAL OBSERVATIONS AS DEFINED IN SECTION 1702.
6. ☐ STRUCTURAL OBSERVATIONS FOR SEISMIC RESISTANCE.
7. ☐ STRUCTURAL OBSERVATIONS FOR WIND RESISTANCE.

STRUCTURAL SHEET INDEX

1	S1	GENERAL NOTES
2	S2	TYPICAL DETAILS
3	S3	DEMO PLAN
4	S4	FOUNDATION PLAN
5	S5	ROOF FRAMING PLAN
6	S6	HIGH ROOF FRAMING PLAN
7	S7	SECTIONS AND DETAILS

CITY OF SAN JOSE
BUILDING DIVISION
B.P.#
DATE

VE SOLUTIONS
Incorporated
5845 Windmill Way, Suite D
Carmichael, CA 95608
PH. (916) 505-0519
Fax. (916) 482-1173
E-mail: bradf@vesolutions.net

REGISTERED PROFESSIONAL ENGINEER
BRADLEY A. FRIEDEROPS
S2780
Exp. 9/30/11
STRUCTURAL
STATE OF CALIFORNIA

Project
TACO BELL
REMODEL

170 BERNAL ROAD
SAN JOSE, CA

Sheet Title
GENERAL NOTES

The undersigned Engineer does not represent that these plans or the specifications in connection therewith are suitable, whether or not modified for any other site than the one for which they were specifically prepared. The Engineer disclaims responsibility for these plans and specifications if they are used in whole or in part at any other site.

The contractor shall verify and be responsible for all dimensions and conditions on the job and this office must be notified in writing of any variation from the dimensions and conditions shown by these drawings.

This drawing is not final or to be used for construction until signed by the Engineer and owner.

All drawings and written material appearing herein constitute the original and unpublished work of the Engineer and the same may not be duplicated, used or disclosed without written consent of the Engineer.

Engineer	BAF
Drawn By	DGG

Revisions

NO.	DATE	DESCRIPTION
1	10/07/09	PLAN REVIEW #1

Job No.	9017
Date	6/25/2009

Drawing No.
S1

FILE SPEC: Z:\9000 Jobs\9000\9017 Bernal Rd Taco Bell\CAD\9017 S1-S7.dwg
PLOT DATE: Oct 28, 2008 - 2:34pm

THICKNESS t	BARS "A" SIZE/SPACING	BARS "B" SIZE/SPACING
4"	#4 @ 18"	#4 @ 18"
6"	#5 @ 18"	#5 @ 18"
8"	#5 @ 12"	#5 @ 12"
12"	#5 @ 12" EF	#5 @ 12" EF

NOTE: PLACE SINGLE LAYER OF BARS AT SLAB MID-DEPTH.

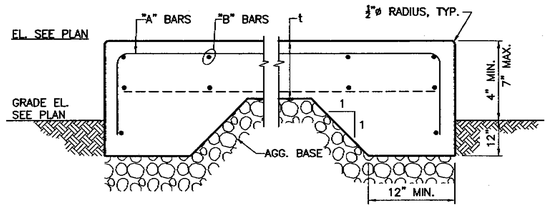

CONCRETE SLAB ON GRADE

SCALE: NONE

S245 TYP

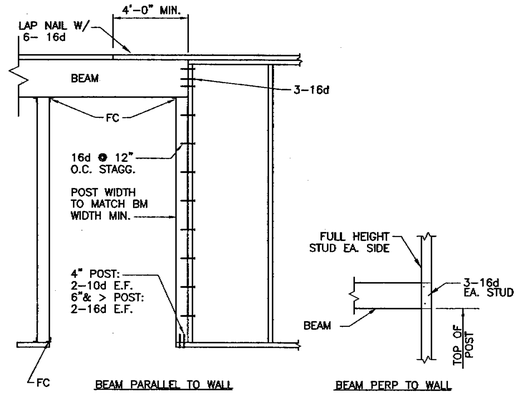

POST/BEAM CONNECTION

SCALE: NONE

S402 TYP

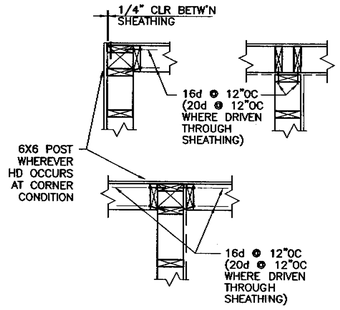

STUD FRAMING AT CORNERS

SCALE: NONE

S404 TYP

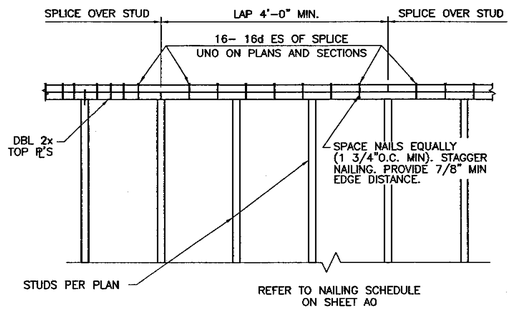

NAILED TOP PLATE SPLICE

SCALE: NONE

S405 TYP

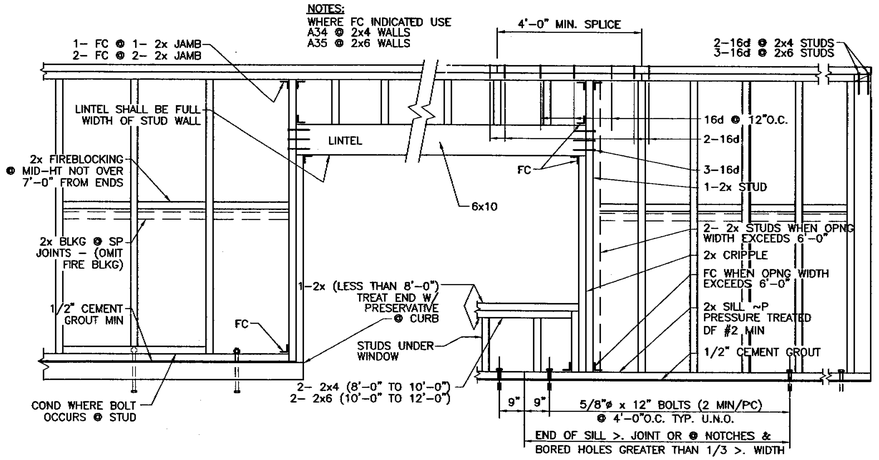

WALL OPENING FRAMING

SCALE: NONE

S407 TYP

CITY OF SAN JOSE BUILDING DIVISION
B.P.#
DATE

VE SOLUTIONS
Incorporated
5845 Windmill Way, Suite D
Carmichael, CA 95608
PH. (916) 505-0519
Fax. (916) 482-1173
E-mail: bradf@vesolutions.net

REGISTERED PROFESSIONAL ENGINEER BRADLEY A. FRIEDRICH S2780 Exp. 9/30/11 STRUCTURAL STATE OF CALIFORNIA

Project

TACO BELL REMODEL

170 BERNAL ROAD
SAN JOSE, CA

Sheet Title

TYPICAL DETAILS

The undersigned Engineer does not represent that these plans or the specifications in connection therewith are suitable, whether or not modified for any other site than the one for which they were specifically prepared. The Engineer disclaims responsibility for these plans and specifications if they are used in whole or in part at any other site.

The contractor shall verify and be responsible for all dimensions and conditions on the job and this office must be notified in writing of any variation from the dimensions and conditions shown by these drawings.

This drawing is not final or to be used for construction until signed by the Engineer and owner.

All drawings and written material appearing herein constitute the original and unpublished work of the Engineer and the same may not be duplicated, used or disclosed without written consent of the Engineer.

Engineer: BAF
Drawn By: DGG
Revisions

NO.	DATE	DESCRIPTION
1	10/07/09	PLAN REVIEW #1

Job No. 9017
Date 6/25/2009
Drawing No.

S2

FILE SPEC: Z:\9000 Jobs\9000\9017 Bernal Rd Taco Bell\CAD\9017 S1-S7.dwg
PLOT DATE: Oct 29, 2009 - 2:49pm

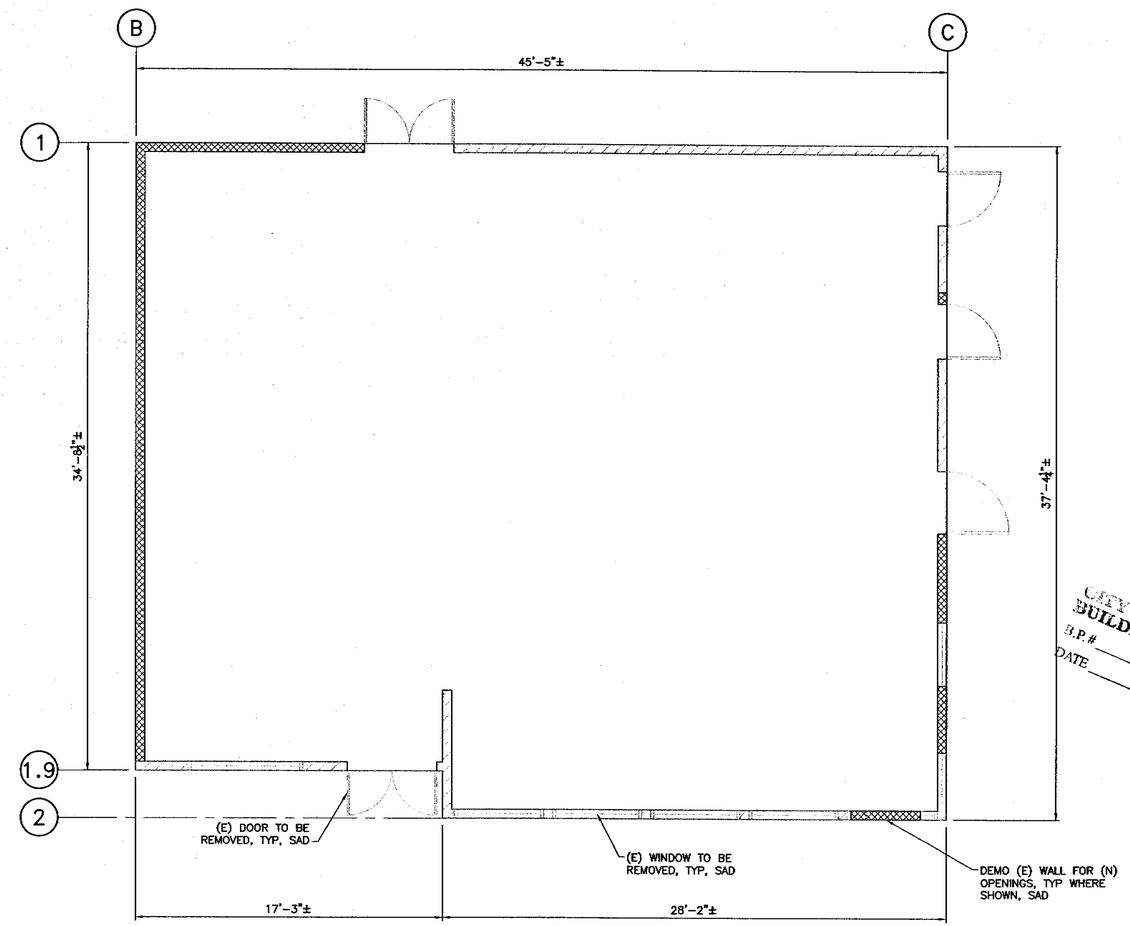

LEGEND

DEMO (E) CMU WALL

(E) CMU WALL

N

DEMO PLAN
SCALE: 1/4"=1'-0"

VE SOLUTIONS
Incorporated
5845 Windmill Way, Suite D
Carmichael, CA 95608
PH. (916) 505-0519
Fax. (916) 482-1173
E-mail: bradf@vesolutions.net

REGISTERED PROFESSIONAL ENGINEER BRADLEY A. FRIEDRICHSEN S2780 Exp. 9/30/11 STRUCTURAL STATE OF CALIFORNIA

Project
TACO BELL
REMODEL

170 BERNAL ROAD
SAN JOSE, CA

Sheet Title
DEMO PLAN

The undersigned Engineer does not represent that these plans or the specifications in connection therewith are suitable, whether or not modified for any other site than the one for which they were specifically prepared. The Engineer disclaims responsibility for these plans and specifications if they are used in whole or in part at any other site.

The contractor shall verify and be responsible for all dimensions and conditions on the job and this office must be notified in writing of any variation from the dimensions and conditions shown by these drawings.

This drawing is not final or to be used for construction until signed by the Engineer and owner.

All drawings and written material appearing herein constitute the original and unpublished work of the Engineer and the same may not be duplicated, used or disclosed without written consent of the Engineer.

CITY OF SAN JOSE BUILDING DIVISION
B.P.#
DATE

Engineer BAF
Drawn By DGG
Revisions

NO.	DATE	DESCRIPTION
1	10/07/09	PLAN REVIEW #1

Job No. 9017
Date 6/25/2009
Drawing No.

S3

FILE SPEC: Z:\9000 Jobs\9000\9017 Bernal Rd Taco Bell\CAD\9017 S1-S7.dwg
PLOT DATE: Oct 29, 2009 - 2:49pm

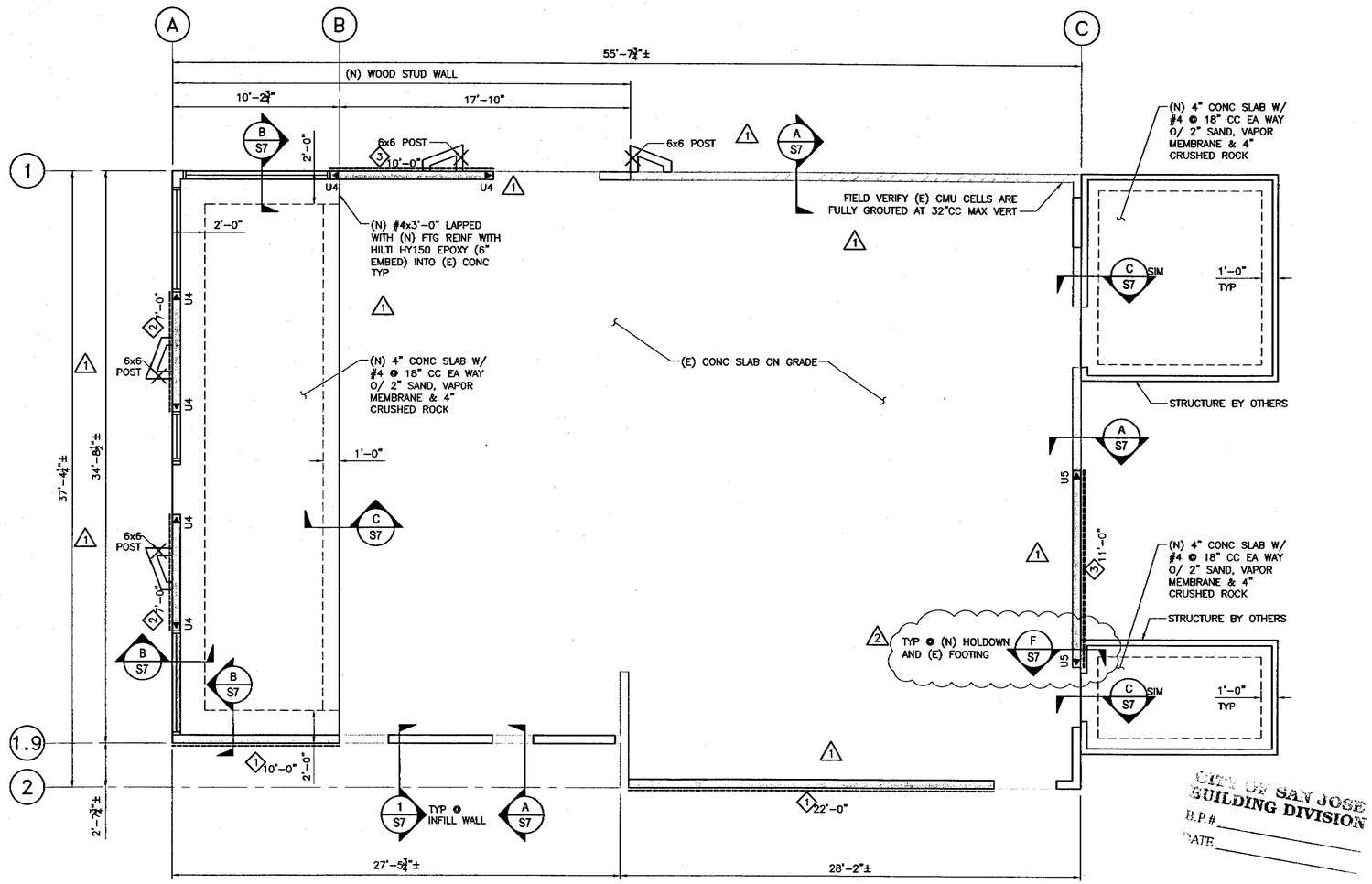

LEGEND

(N) WOOD STUD SHEARWALL

(N) CMU WALL

(N) INFILL WOOD STUD WALL

(E) CMU WALL

◄ INDICATES SIMPSON HDxx-SDS2.5 HOLDOWN. PROVIDE 4x MINIMUM POST AT HOLDOWN UNO.

1 7'-0" — INDICATES SHEARWALL TYPE, SEE SHEARWALL SCHEDULE; INDICATES MINIMUM SHEARWALL LENGTH

SHEARWALL SCHEDULE				
TYPE	WALL SHEATHING	SHEATHING EDGE NAILING	SILL PLATE	ANCHOR BOLTING
1	½" STRUCT I 1 SIDE	10d @ 6" CC	2x PTDF	¾"ø @ 48"CC
2	½" STRUCT I 1 SIDE	10d @ 4" CC	3x PTDF	¾"ø @ 36"CC
3	½" STRUCT I 1 SIDE	10d @ 3" CC	3x PTDF	¾"ø @ 24"CC

1. WHERE 10d NAILS PENETRATE FRAMING MORE THAN 1½" AND NAILS ARE SPACED 3" ON CENTER, FRAMING AT ADJOINING PANEL EDGES SHALL BE 3" NOMINAL OR WIDER AND NAILS SHALL BE STAGGERED.
2. ANCHOR BOLTS FOR SHEAR WALLS SHALL HAVE 3" SQUARE x ⅛" STEEL PLATE WASHERS BETWEEN THE SILL PLATE AND NUT.
3. EXTERIOR WALLS SHALL BE SHEATHED WITH TYPE 1 NAILING UNLESS NOTED OTHERWISE ON PLAN.
4. USE ½"ø x 3¼" MIN EMBED HILTI KB-TZ ANCHORS @ 12"CC WHERE (E) CONCRETE (f'c=2500 PSI MIN) OCCURS.

FOUNDATION PLAN
SCALE: 1/4"=1'-0"

CITY OF SAN JOSE BUILDING DIVISION
B.P.#
DATE

VE SOLUTIONS
Incorporated
5845 Windmill Way, Suite D
Carmichael, CA 95608
PH. (916) 505-0519
Fax. (916) 482-1173
E-mail: bradf@vesolutions.net

REGISTERED PROFESSIONAL ENGINEER BRADLEY A. FRIEDERICHS S2780 Exp. 9/30/11 STRUCTURAL STATE OF CALIFORNIA

Project
TACO BELL REMODEL

170 BERNAL ROAD
SAN JOSE, CA

Sheet Title
FOUNDATION PLAN

The undersigned Engineer does not represent that these plans or the specifications in connection therewith are suitable, whether or not modified for any other site than the one for which they were specifically prepared. The Engineer disclaims responsibility for these plans and specifications if they are used in whole or in part at any other site.

The contractor shall verify and be responsible for all dimensions and conditions on the job and this office must be notified in writing of any variation from the dimensions and conditions shown by these drawings.

This drawing is not final or to be used for construction until signed by the Engineer and owner.

All drawings and written material appearing herein constitute the original and unpublished work of the Engineer and the same may not be duplicated, used or disclosed without written consent of the Engineer.

Engineer: BAF
Drawn By: DGG
Revisions

NO.	DATE	DESCRIPTION
1	10/07/09	PLAN REVIEW #1
2	10/30/09	PLAN REVIEW #2

Job No. 9017
Date 6/25/2009
Drawing No.

S4

FILE SPEC: Z:\9000 Jobs\9000\9017 Bernal Rd Taco Bell\CAD\9017 S1-S7.dwg
PLOT DATE: Oct 29, 2009 - 2:48pm

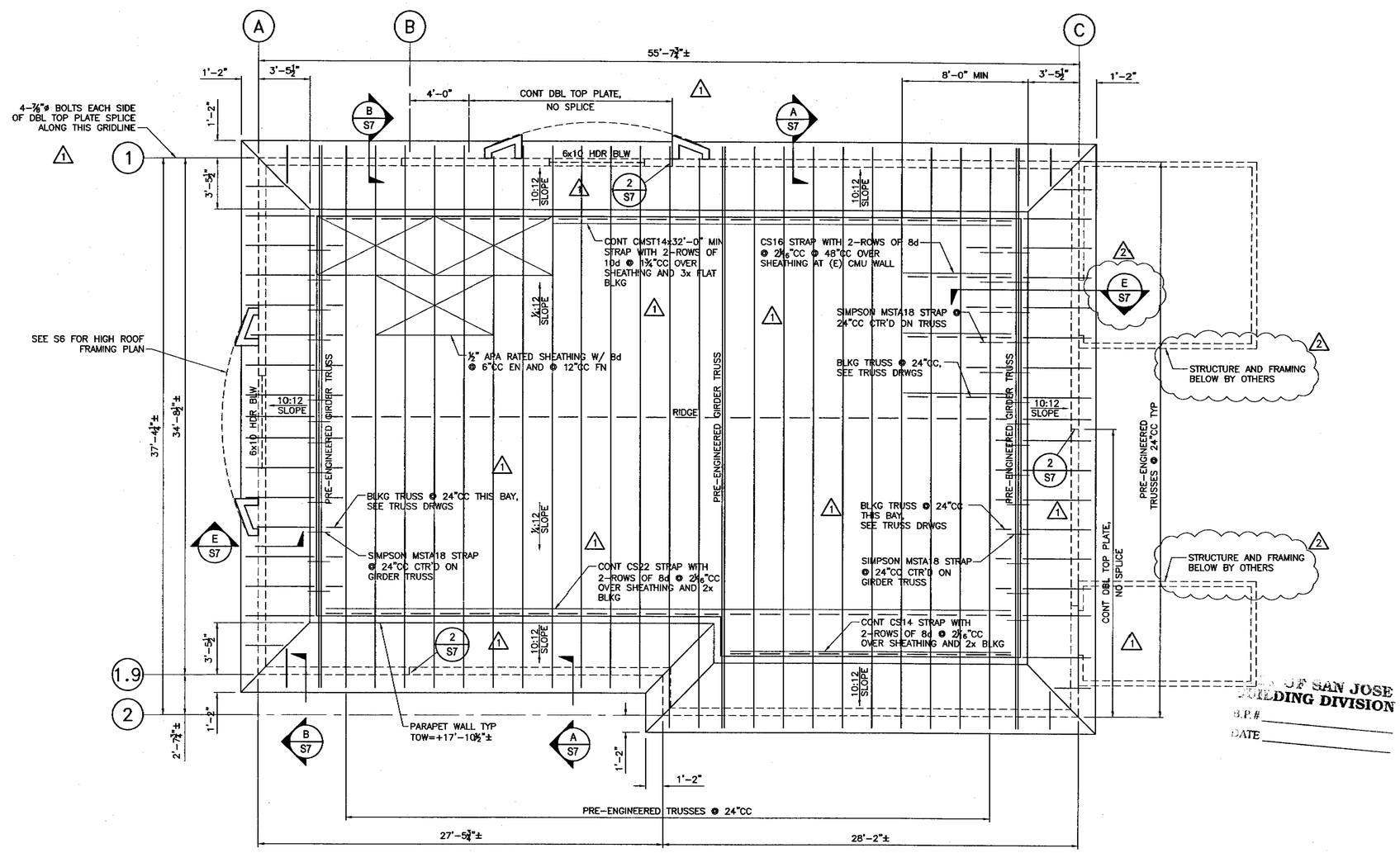

ROOF FRAMING PLAN

SCALE: 1/4"=1'-0"

ROOF FRAMING PLAN NOTES:

1. PROVIDE DOUBLE TOP PLATE SPLICES PER TYPICAL DETAIL S405 ON SHEET S2 UNLESS NOTED OTHERWISE ON ROOF FRAMING PLAN.

VE SOLUTIONS
Incorporated
5845 Windmill Way, Suite D
Carmichael, CA 95608
PH. (916) 505-0519
Fax. (916) 482-1173
E-mail: bradf@vesolutions.net

REGISTERED PROFESSIONAL ENGINEER BRADLEY A. FRIEDERICHS 82780 Exp. 9/30/11 STRUCTURAL STATE OF CALIFORNIA

Project
TACO BELL REMODEL

170 BERNAL ROAD
SAN JOSE, CA

Sheet Title
ROOF FRAMING PLAN

The undersigned Engineer does not represent that these plans or the specifications in connection therewith are suitable, whether or not modified for any other site than the one for which they were specifically prepared. The Engineer disclaims responsibility for these plans and specifications if they are used in whole or in part at any other site.

The contractor shall verify and be responsible for all dimensions and conditions on the job and this office must be notified in writing of any variation from the dimensions and conditions shown by these drawings.

This drawing is not final or to be used for construction until signed by the Engineer and owner.

All drawings and written material appearing herein constitute the original and unpublished work of the Engineer and the same may not be duplicated, used or disclosed without written consent of the Engineer.

CITY OF SAN JOSE
BUILDING DIVISION
B.P.#
DATE

Engineer	BAF
Drawn By	DGG

Revisions

NO.	DATE	DESCRIPTION
1	10/07/09	PLAN REVIEW #1
2	10/30/09	PLAN REVIEW #2

Job No.	9017
Date	6/25/2009

Drawing No.

S5

FILE SPEC: Z:\9000 Jobs\9000\9017 Bernal Rd Taco Bell\CAD\9017 S1-S7.dwg
PLOT DATE: Oct 29, 2009 - 2:49pm

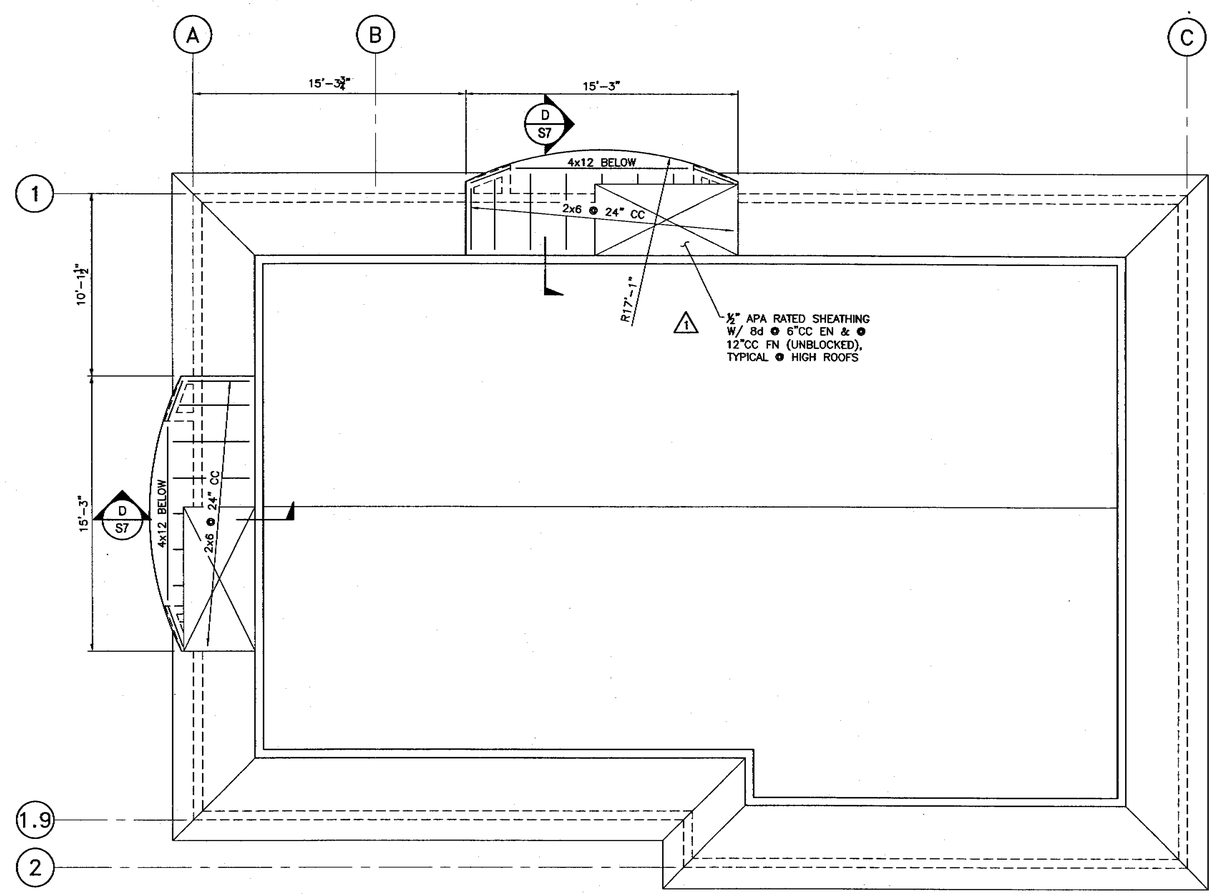

HIGH ROOF FRAMING PLAN
SCALE: 1/4"=1'-0"

VE SOLUTIONS
Incorporated
5845 Windmill Way, Suite D
Carmichael, CA 95608
PH. (916) 505-0519
Fax. (916) 482-1173
E-mail: bradf@vesolutions.net

REGISTERED PROFESSIONAL ENGINEER BRADLEY A. FRIEDERICHS S2780 Exp. 9/30/11 STRUCTURAL STATE OF CALIFORNIA

Project
TACO BELL
REMODEL

170 BERNAL ROAD
SAN JOSE, CA

Sheet Title
HIGH ROOF
FRAMING PLAN

The undersigned Engineer does not represent that these plans or the specifications in connection therewith are suitable, whether or not modified for any other site than the one for which they were specifically prepared. The Engineer disclaims responsibility for these plans and specifications if they are used in whole or in part at any other site.

The contractor shall verify and be responsible for all dimensions and conditions on the job and this office must be notified in writing of any variation from the dimensions and conditions shown by these drawings.

This drawing is not final or to be used for construction until signed by the Engineer and owner.

All drawings and written material appearing herein constitute the original and unpublished work of the Engineer and the same may not be duplicated, used or disclosed without written consent of the Engineer.

CITY OF SAN JOSE
BUILDING DIVISION
S.P.#
DATE

Engineer	BAF
Drawn By	DGG

Revisions

NO.	DATE	DESCRIPTION
1	10/07/09	PLAN REVIEW #1

Job No.	9017
Date	6/25/2009

Drawing No.
S6

FILE SPEC: Z:\9000 Jobs\9000\9017 Bernal Rd Taco Bell\CAD\9017 S1-S7.dwg
PLOT DATE: Oct 29, 2009 - 2:49pm

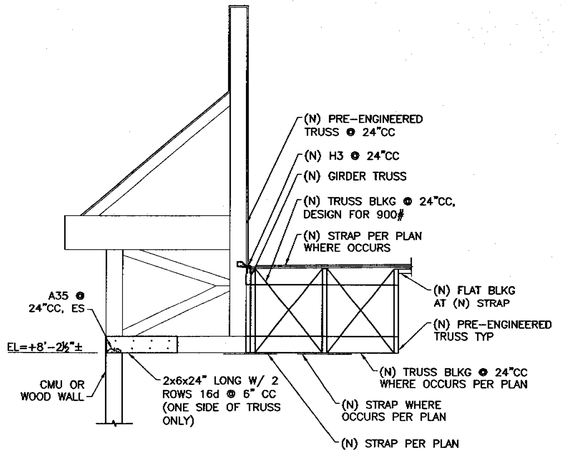

SECTION E/S7 1
SCALE: 1/2"=1'-0"

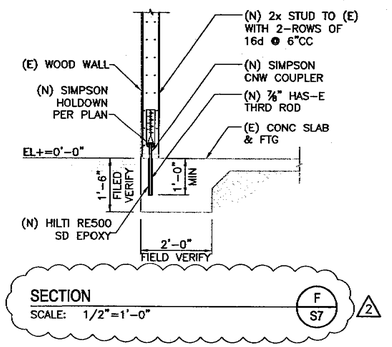

SECTION F/S7 2
SCALE: 1/2"=1'-0"

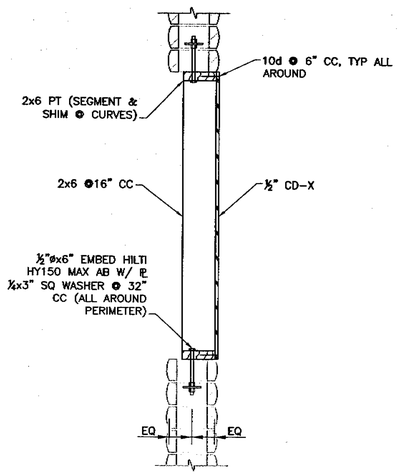

INFILL @ (E) OPNG 1/S7
SCALE: 1"=1'-0"

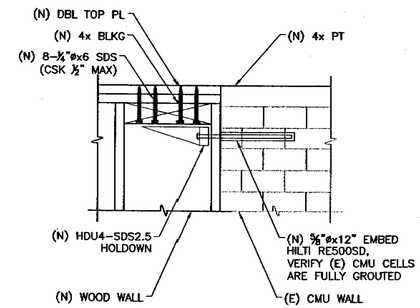

1
CONN @ CMU WALL 2/S7
SCALE: 1"=1'-0"

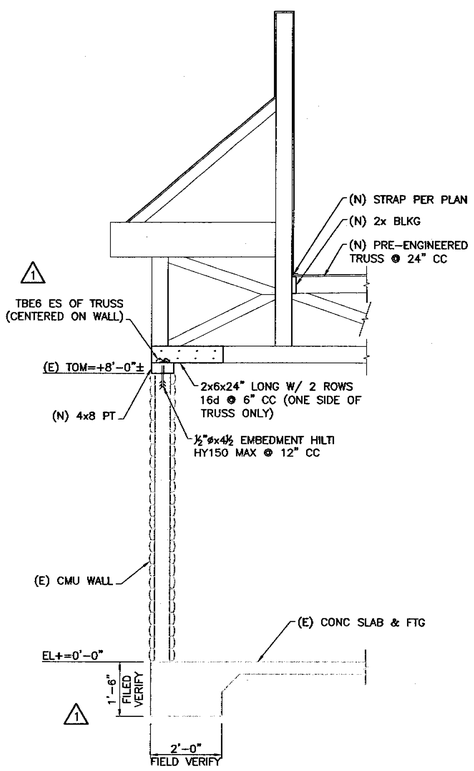

SECTION A/S7
SCALE: 1/2"=1'-0"

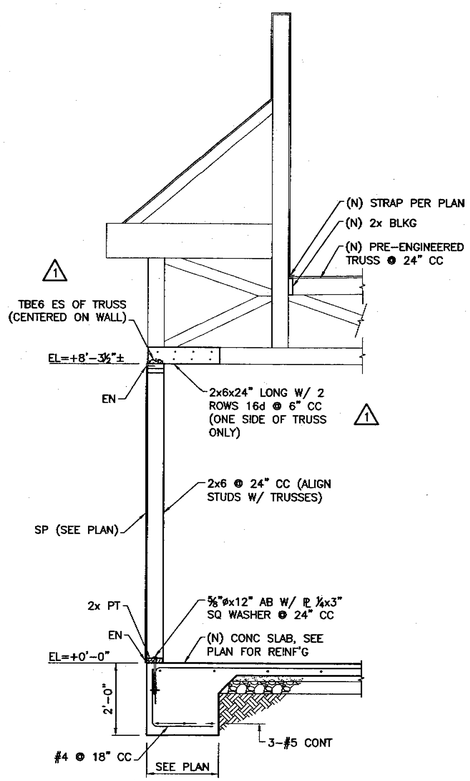

SECTION B/S7
SCALE: 1/2"=1'-0"

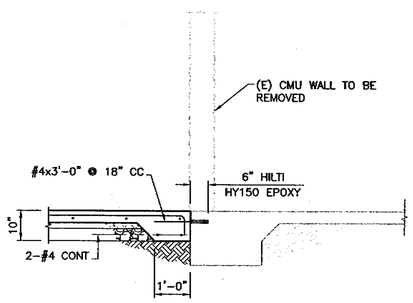

SECTION C/S7
SCALE: 1/2"=1'-0"

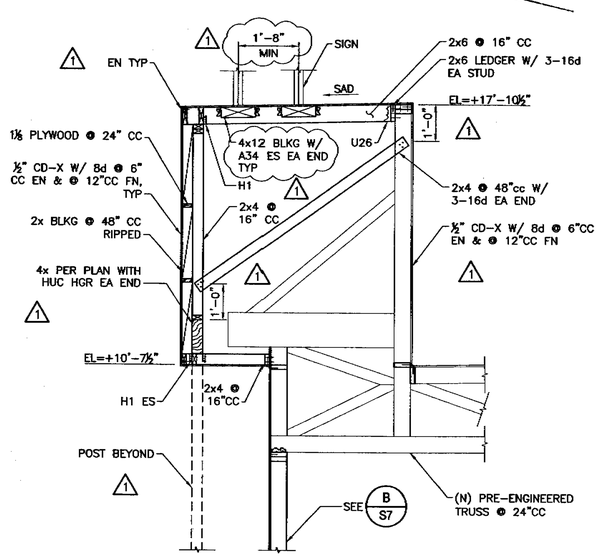

SECTION D/S7
SCALE: 1/2"=1'-0"

VE SOLUTIONS
Incorporated
5845 Windmill Way, Suite D
Carmichael, CA 95608
PH. (916) 505-0519
Fax. (916) 482-1173
E-mail: bradf@vesolutions.net

REGISTERED PROFESSIONAL ENGINEER BRADLEY A. FRIEDEMANN 82780 Exp. 9/30/11 STRUCTURAL STATE OF CALIFORNIA

Project
TACO BELL REMODEL

170 BERNAL ROAD
SAN JOSE, CA

Sheet Title
SECTIONS & DETAILS

CITY OF SAN JOSE BUILDING DIVISION
P.P.#
DATE

The undersigned Engineer does not represent that these plans or the specifications in connection therewith are suitable, whether or not modified for any other site than the one for which they were specifically prepared. The Engineer disclaims responsibility for these plans and specifications if they are used in whole or in part at any other site.

The contractor shall verify and be responsible for all dimensions and conditions on the job and this office must be notified in writing of any variation from the dimensions and conditions shown by these drawings.

This drawing is not final or to be used for construction until signed by the Engineer and owner.

All drawings and written material appearing herein constitute the original and unpublished work of the Engineer and the same may not be duplicated, used or disclosed without written consent of the Engineer.

Engineer	BAF
Drawn By	DGG

Revisions

NO.	DATE	DESCRIPTION
1	10/07/09	PLAN REVIEW #1
2	10/30/09	PLAN REVIEW #2

Job No.	9017
Date	6/25/2009

Drawing No.
S7

FILE SPEC: Z:\9000 Jobs\9000\9017 Bernal Rd Taco Bell\CAD\9017 S1-S7.dwg
PLOT DATE: Oct 29, 2009 - 2:49pm

LEGEND

1. EXTG. WATER
2. (N) GREASE INTERCEPTOR
3. UNAUTHORIZED VEHICLE SIGN
4. NOT USED
5. ENTER SIGN
6. NOT USED
7. NOT USED
8. HANDICAPPED SYMBOL
9. ACCESSIBLE PARKING SIGN
10. EXTG. LANDSCAPE AREA
11. EXTG. TRASH ENCLOSURE
12. HANDICAPPED S.W. SLOPE
13. NOT USED
14. 4" PAINTED STRIPES
15. PAINTED ARROWS & TEXT
16. ℄ PROPERTY LINE
17. SIDEWALK
18. 6" CONC. CURB
19. S.W. FLUSH W/ PAVING
20. EXISTING SIGN
21. TRUNCATED DOMES

○ PATH OF TRAVEL

DINING ROOM= 60 SEATS

PROJECT SUMMARY

PARCEL SIZE	11,440sqft
EXTG TACO BELL	1,770sqft
NEW SPACE	426 sqft
TOTAL	2196
PARKING REQ.	20
PARKING PROVIDED NO DRIVE THRU	28

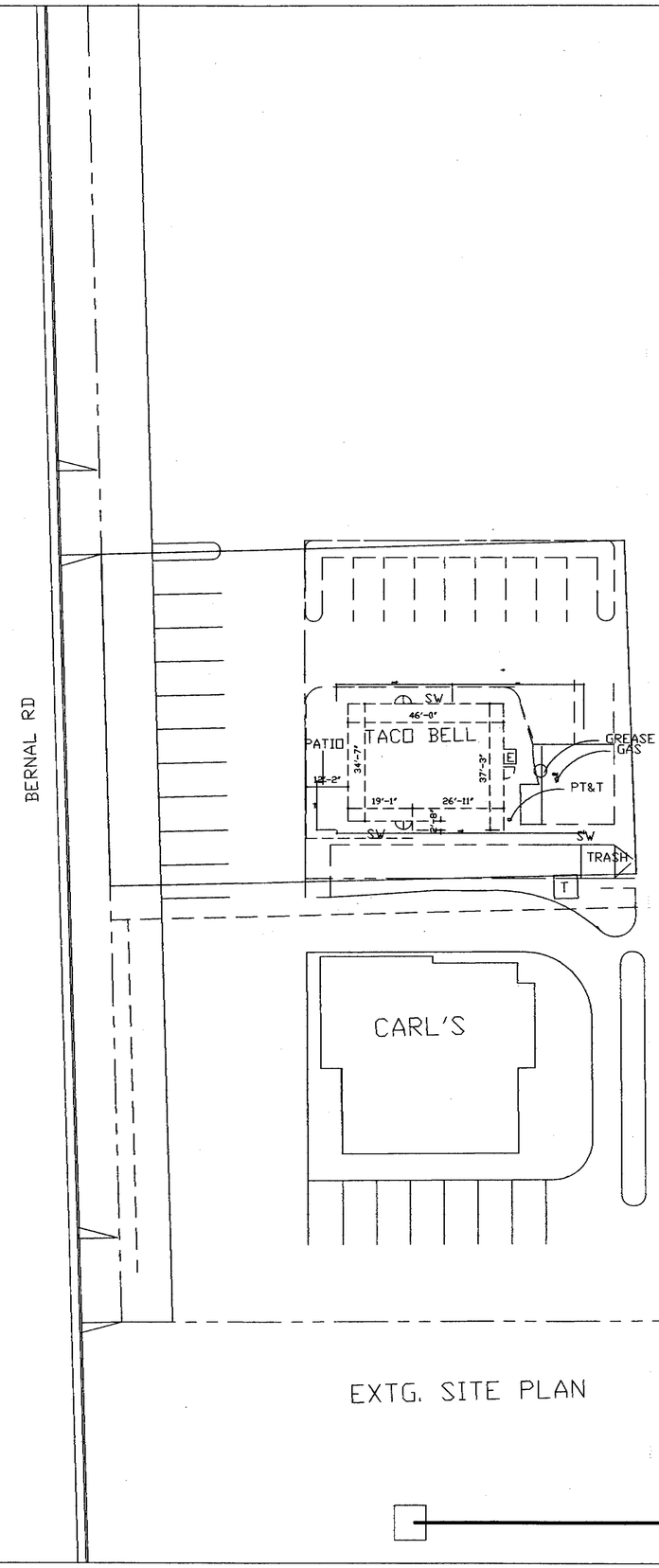

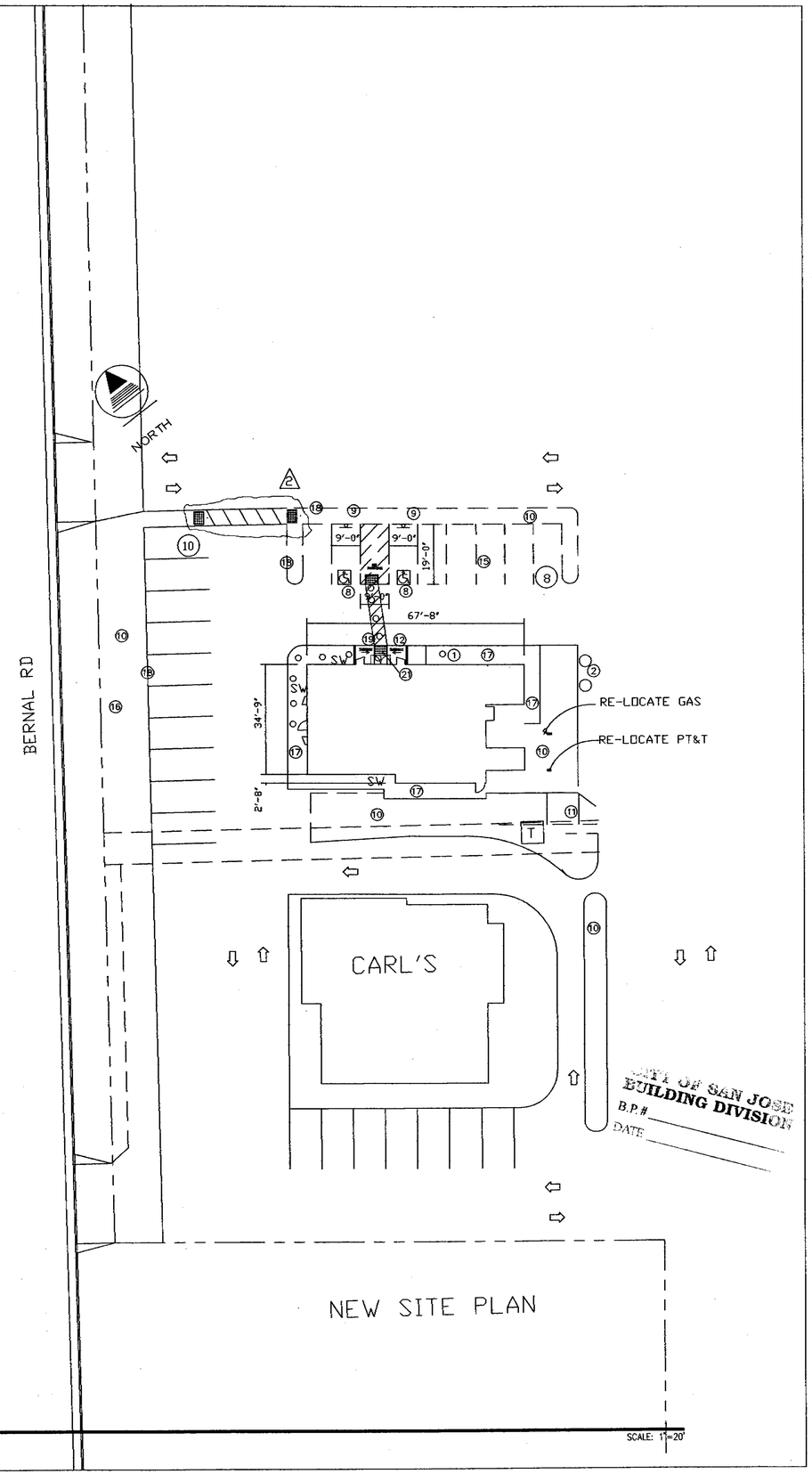

CITY OF SAN JOSE
BUILDING DIVISION
B.P.#
DATE

PLOT DATE 9/14/99

THE FRAZIER GROUP
DESIGN & DEVELOPMENT SERVICES

5165 DREDGER WAY
ORANGEVALE, CALIFORNIA
95662 (916) 761-9331

PROFESSIONAL ENGINEER
LANCE R. PYLE
NO. 16341
EXP. 6/30/10
CIVIL
STATE OF CALIFORNIA
10-21-09

2 Bldg. 8-21-09

TACO BELL
170 BERNAL RD.
SAN JOSE, CALIFORNIA

SITE PLAN

THIS DRAWING SHALL NOT BE CONSIDERED WHOLE OR ACCURATE UNTIL SIGNED BY THE ARCHITECT OF RECORD, LANCE R. PYLE

JOB DT:	11-12-02
DRN BY:	WH
JOB:	54502
WORK DT:	11-27-02

545SP

SHEET
A0.1

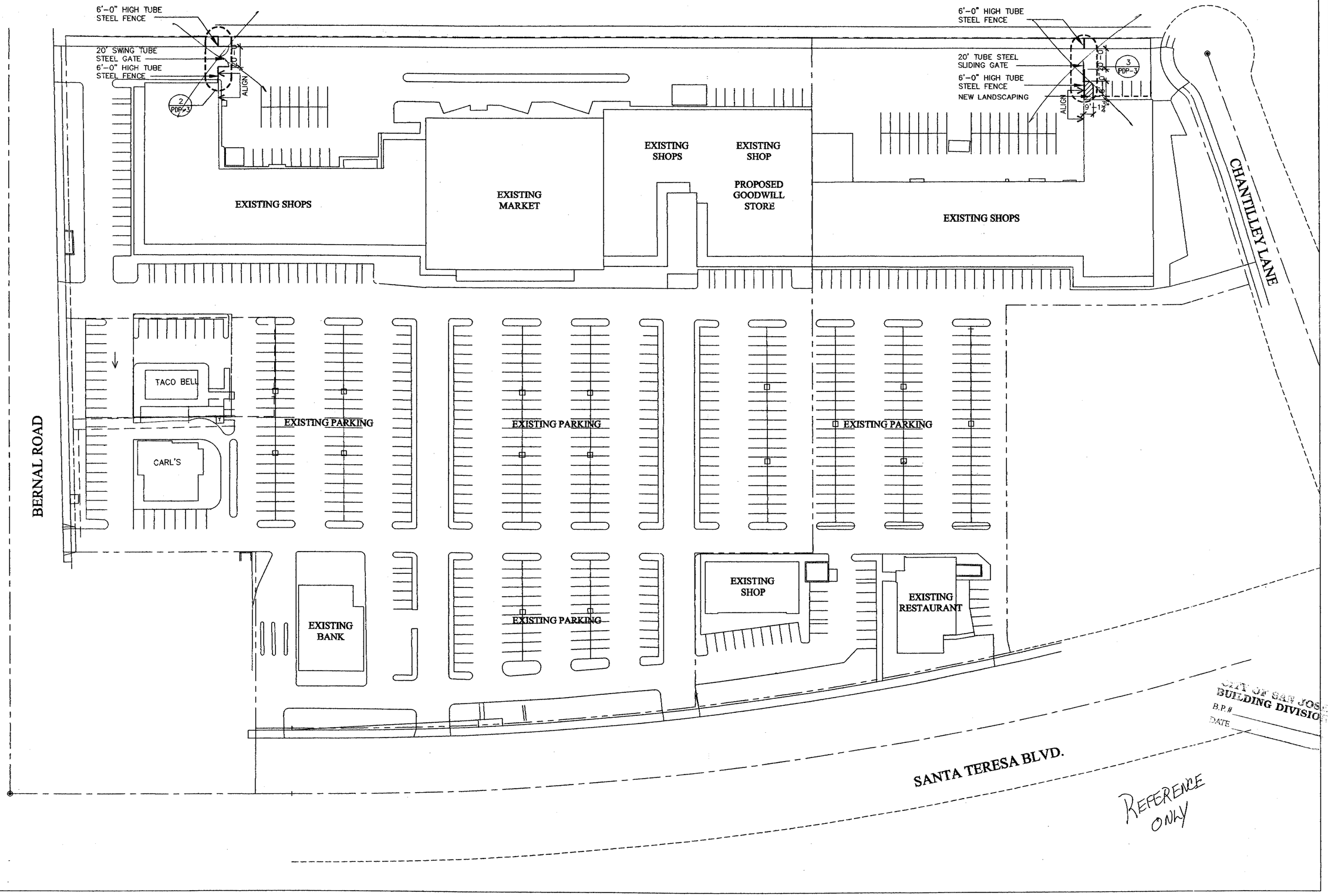

CITY OF SAN JOSE
BUILDING DIVISION
B.P.#
DATE

REFERENCE ONLY

THE FRAZIER GROUP
DESIGN & DEVELOPMENT SERVICES

5165 DREDGER WAY
ORANGEVALE, CALIFORNIA
95662 (916) 761-9331

TACO BELL
170 BERNAL RD
SAN JOSE, CA

THIS DRAWING SHALL NOT BE CONSIDERED WHOLE OR ACCURATE UNTIL SIGNED BY THE ARCHITECT.

CONTACT DATE:
BUILDING STYLE
PLAN VERSION:
SITE NUMBER
TFG NUMBER
WORK DATE:
ISSUE DATE:

TACO BELL

A0.2

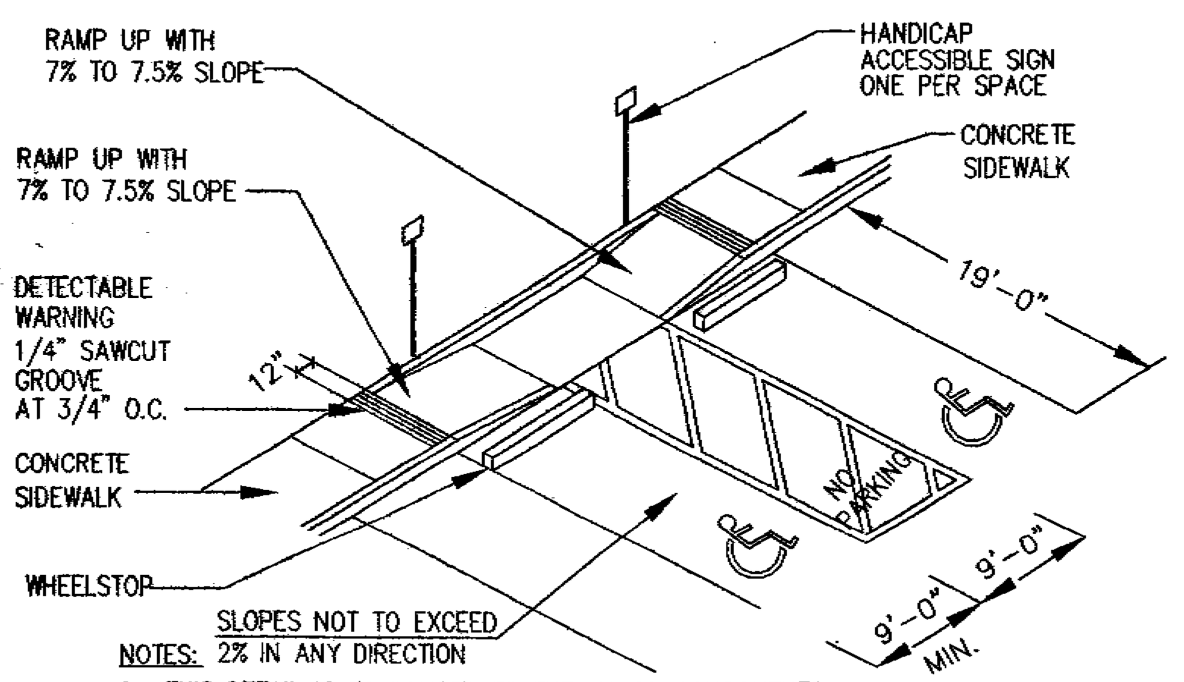

NOT TO SCALE

NOTES:
1. THIS DETAIL IS TO ILLUSTRATE THE MAJOR COMPONENTS REQUIRED FOR ADA PARKING. REFER TO THE SITE PLAN, SHEET 1, FOR THE ACTUAL LAYOUT AND NUMBER OF SPACES TO BE PROVIDED
2. ALL PAINTED LINES AND STRIPING SHALL BE 4" WIDE; STRIPING SHALL BE SPACED AT 36" ON CENTER; COLOR SHALL BE BLUE
3. "NO PARKING" LETTERS TO BE 12"

HANDICAP PARKING DETAIL

4. 6. 2 LOCATION (PER CBC 2007 CHAPTER 11B)
ACCESSIBLE PARKING SPACES SERVING A PARTICULAR BUILDING SHALL BE LOCATED ON THE SHORTEST ACCESSIBLE ROUTE OF TRAVEL FROM ADJACENT PARKING TO AN ACCESSIBLE ENTRANCE. IN PARKING FACILITIES THAT DO NOT SERVE A PARTICULAR BUILDING. ACCESSIBLE PARKING SHALL BE LOCATED ON THE SHORTEST ACCESSIBLE ROUTE OF TRAVEL TO AN ACCESSIBLE PEDESTRIAN ENTRANCE OF THE PARKING FACILITY. IN BUILDINGS WITH MULTIPLE ACCESSIBLE ENTRANCES WITH ADJACENT PARKING. ACCESSIBLE PARKING SPACES SHALL BE DISPERSED AND LOCATED CLOSEST TO THE ACCESSIBLE ENTRANCES.

4. 6. 3 PARKING SPACES (PER CBC 2007 CHAPTER 11B)
ACCESSIBLE PARKING SPACES SHALL BE AT LEAST 9'-0" WIDE. PARKING ACCESS AISLES SHALL PART OF AN ACCESSIBLE ROUTE TO THE BUILDING OR FACILITY ENTRANCE AND SHALL COMPLY WITH 4. 3. TWO ACCESSIBLE PARKING SPACES MAY SHARE A COMMON ACCESS AISLE (SEE LAYOUT ABOVE). PARKED VEHICLE OVERHANGS SHALL NOT REDUCE THE CLEAR WIDTH OF AN ACCESSIBLE ROUTE. PARKING SPACES AND ACCESS AISLES SHALL BE LEVEL WITH SURFACE SLOPES NOT EXCEEDING 1:50 (296mm) IN ALL DIRECTIONS.

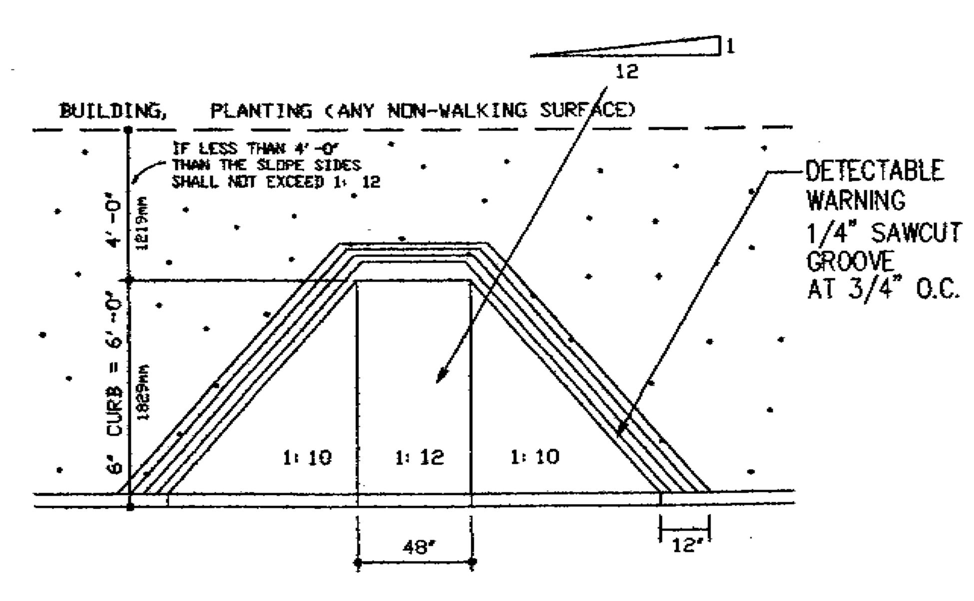

HANDICAPPED RAMP DETAIL

SCALE: 1/4" = 1'-0" COMPLY WITH LOCAL CODE REQUIREMENTS

4. 7. 1 LOCATION (CBC 2007 CHAPTER 11B)
CURB RAMPS COMPLYING WITH 4. 7 SHALL BE PROVIDED WHEREEVER AN ACCESSIBLE ROUTE CROSSES A CURB.

4. 7. 2 SLOPE (CBC 2007 CHAPTER 11B)
SLOPES OF CURB RAMPS SHALL COMPLY WITH 4. 8. 2. THE SLOPE SHALL BE MEASURED AS SHOWN TRANSITIONS FROM RAMPS TO WALKS, GUTTERS, OR STREETS SHALL BE FLUSH AND FREE OF ABRUPT CHANGES. MAXIMUM SLOPES OF ADJOINING GUTTERS, ROAD SURFACE IMMEDIATELY ADJACENT TO THE CURB RAMP OR ACCESSIBLE ROUTE SHALL NOT EXCEED 1:20.

4. 7. 3 WIDTH (CBC 2007 CHAPTER 11B)
THE MINIMUM WIDTH OF A CURB RAMP SHALL BE 3'-0" (914mm) EXCLUSIVE OF FLARED SIDES.

4. 7. 4 SURFACES (CBC 2007 CHAPTER 11B)
SURFACES OF CURB RAMPS SHALL COMPLY WITH 4.5.

4. 7. 5 SIDES OF CURB RAMPS (CBC 2007 CHAPTER 11B)
IF A CURB RAMP IS LOCATED WHERE PEDESTRIANS MUST WALK ACROSS THE RAMP OR WHERE IT IS NOT PROTECTED BY HANDRAILS OR GUARDRAILS, IT SHALL HAVE FLARED SIDES; THE MAXINUM SLOPE OF THE FLARE SHALL BE 1:10 (SEE DETAIL ABOVE). CURB RAMPS WITH RETURNED CURBS MAY BE USED WHERE PEDESTRIANS WOULD NOT NORMALLY WALK ACROSS THE RAMP. (FOR ADDITIONAL INFORMATION REFER TO FIGURES 12(a) AND 12(b) IN COMPLIANCE GUIDE).

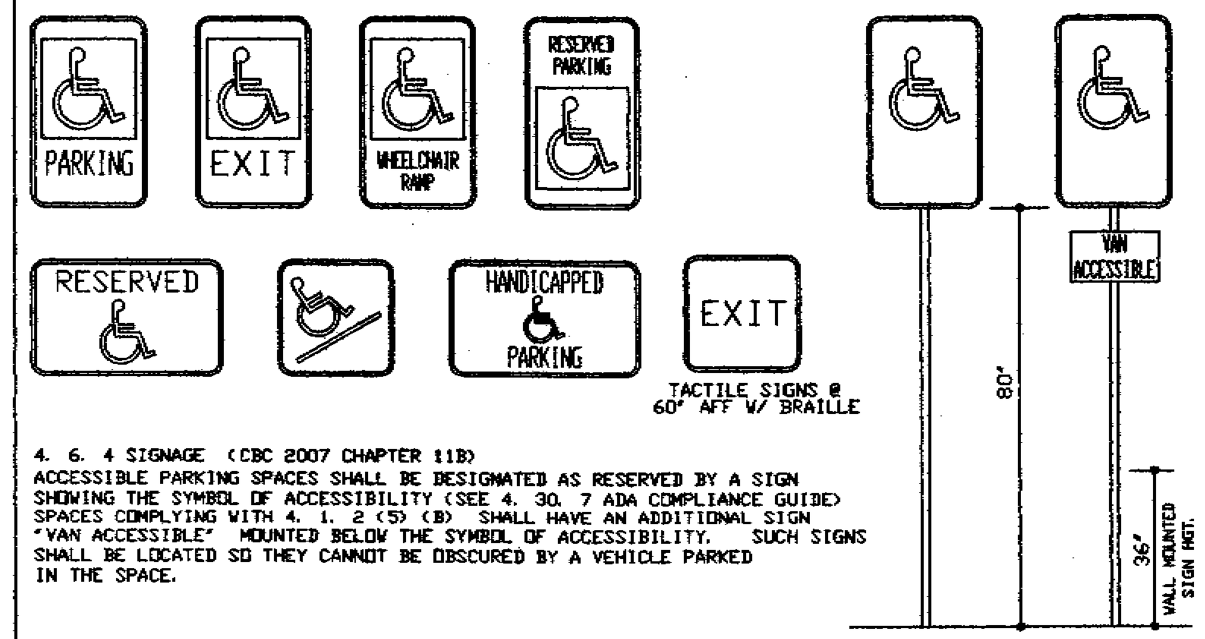

4. 6. 4 SIGNAGE (CBC 2007 CHAPTER 11B)
ACCESSIBLE PARKING SPACES SHALL BE DESIGNATED AS RESERVED BY A SIGN SHOWING THE SYMBOL OF ACCESSIBILITY (SEE 4. 30. 7 ADA COMPLIANCE GUIDE) SPACES COMPLYING WITH 4. 1. 2 (5) (B) SHALL HAVE AN ADDITIONAL SIGN "VAN ACCESSIBLE" MOUNTED BELOW THE SYMBOL OF ACCESSIBILITY. SUCH SIGNS SHALL BE LOCATED SO THEY CANNOT BE OBSCURED BY A VEHICLE PARKED IN THE SPACE.

HANDICAPPED SIGNAGE

NO SCALE COMPLY WITH LOCAL CODE REQUIREMENTS

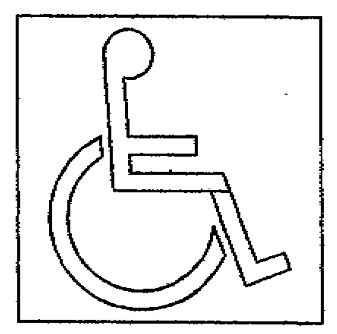

FIG. 43
INTERNATIONAL SYMBOL OF ACCESSIBILITY
(DISPLAY CONDITIONS)

4. 30. 2 CHARACTER PROPORTION (PER CBC 2007 CHAPTER 11B)
LETTERS AND NUMBERS ON SIGNS SHALL HAVE A WIDTH-TO-HEIGHT RATIO BETWEEN 3:5 AND 1:1 AND A STROKE WIDTH-TO-HEIGHT RATIO BETWEEN 1:5 AND 1:10.

4. 30. 3 COLOR CONTRAST (PER CBC 2007 CHAPTER 11B)
CHARACTERS AND SYMBOLS SHALL CONTRAST WITH THEIR BACKGROUND EITHER LIGHT CHARACTERS ON A DARK BACKGROUND OR DARK CHARACTERS ON A LIGHT BACKGROUND.

4. 30. 4 RAISED OR INDENTED CHARACTERS OR SYMBOLS (PER CBC 2007 CHAPTER 11B)
LETTERS AND NUMBERS ON SIGNS SHALL BE RAISED OR INCISED 1/32" (0.8mm) MINIMUM AND SHALL BE SANS SERIF CHARACTERS. RAISED CHARACTERS OR SYMBOLS SHALL BE AT LEAST 5/8" (16mm) HIGH, BUT NO HIGHER THAN 2"s (50mm). INDENTED CHARACTERS OR SYMBOLS SHALL HAVE A STROKE WIDTH OF AT LEAST 1/4" (6mm). SYMBOLS OR PICTOGRAPHS ON SIGNS SHALL BE RAISED OR INDENTED 1/32" (0.8mm) MINIMUM.

4. 30. 5 SYMBOLS OF ACCESSIBLITY (PER CBC 2007 CHAPTER 11B)
ACCESSIBLE FACILITIES REQUIRED TO BE IDENTIFIED BY 4. 1, SHALL USE THE INTERNATIONAL SYMBOL OF ACCESSIBILITY. THE SYMBOL SHALL BE DISPLAYED AS SHOWN IN FIG. 43.

4. 30. 6 MOUNTING LOCATION AND HEIGHT (PER CBC 2007 CHAPTER 11B)
INTERIOR SIGNAGE SHALL BE LOCATED ALONGSIDE THE DOOR ON THE LATCH SIDE AND SHALL BE MOUNTED AT A HEIGHT CENTERED @ 60" ABOVE THE FINISHED FLOOR.

HANDICAPPED SYMBOLS

NO SCALE

PRODUCT TYPEHANDICAPPED DECALS
COMPANY NAMEWASSERSTROM/CBC
TELEPHONE: 800-444-4697 JIM CAMPBELL

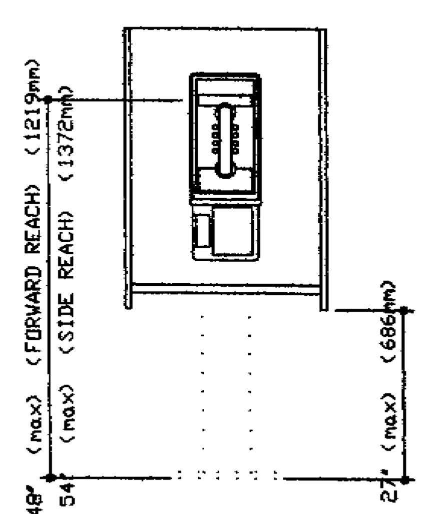

ELEVATION HEIGHTS

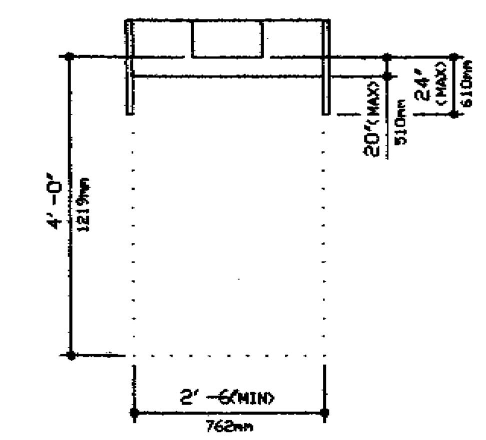

FORWARD REACH CLEARANCES

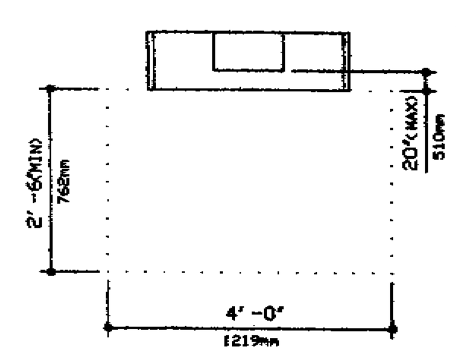

SIDE REACH CLEARANCES

4. 31. 1 GENERAL (PER CBC 2007 CHAPTER 11B)
PUBLIC TELEPHONES REQUIRED TO BE ACCESSIBLE BY 4. 1 SHALL COMPLY WITH 4. 31

4. 31. 2 CLEAR FLOOR OR GROUND SPACE (PER CBC 2007 CHAPTER 11B)
A CLEAR FLOOR OR GROUND SPACE AT LEAST 2'-6" BY 4'-0" (762mm BY 1219mm) THAT ALLOWS EITHER A FORWARD OR PARALLEL APPROACH BY A PERSON USING A WHEELCHAIR, SHALL BE PROVIDED AT TELEPHONES (SEE DETAILS SHOWN) THE CLEAR FLOOR OR GROUND SPACE SHALL COMPLY WITH 4. 2. 4 BASES, ENCLOSURES, AND FIXED SEATS SHALL NOT IMPEDE APPROACHES TO TELEPHONES BY PEOPLE USING WHEELCHAIRS.

4. 31. 3 MOUNTING HEIGHT (PER CBC 2007 CHAPTER 11B)
THE HIGHEST OPERABLE PART OF THE TELEPHONE SHALL BE WITHIN THE REACH RANGES SPECIFIED IN 4. 2. 5 OR 4. 2. 6

4. 31. 4 PROTRUDING OBJECTS
TELEPHONES SHALL COMPLY WITH 4. 4

TELEPHONE HEIGHTS AND CLEARANCES

NO SCALE COMPLY WITH LOCAL CODE REQUIREMENTS

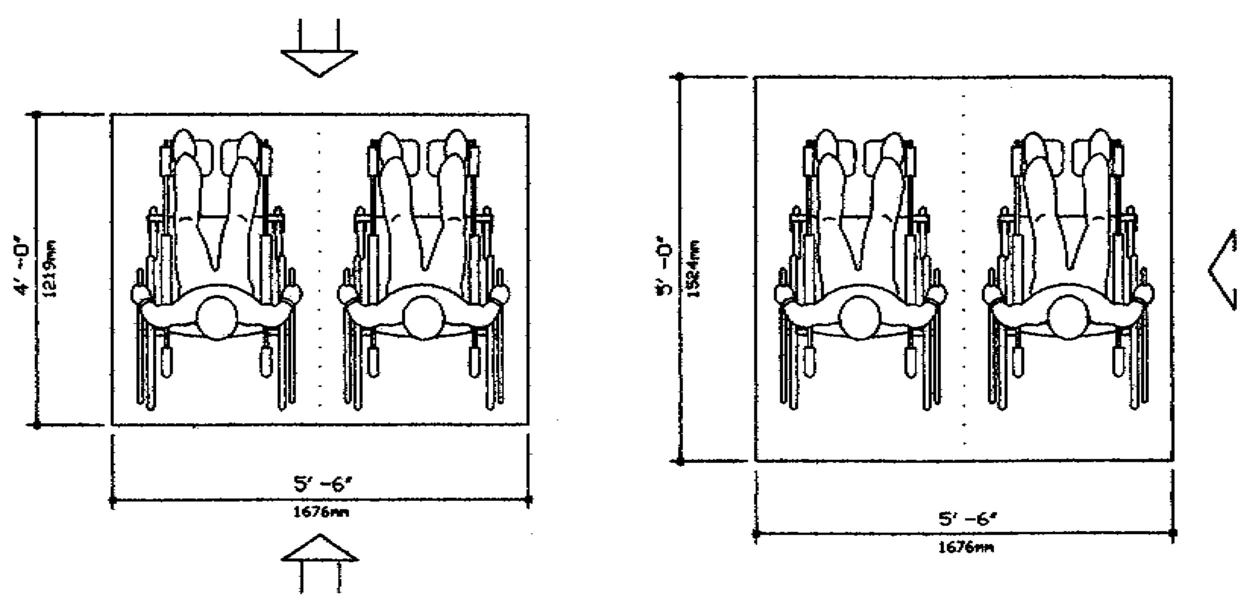

FORWARD OR REAR ACCESS

SIDE ACCESS

SPACE REQUIREMENTS FOR WHEELCHAIRS

NO SCALE COMPLY WITH LOCAL CODE REQUIREMENTS

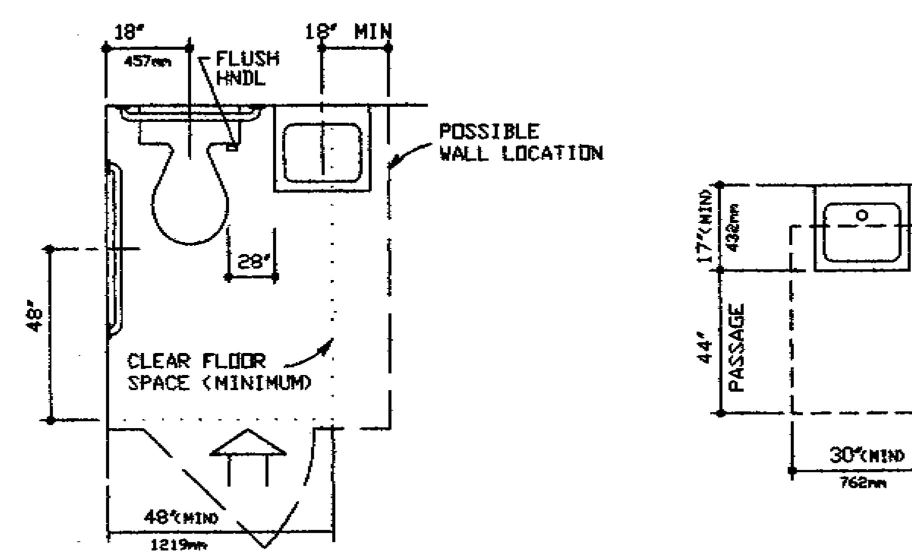

CLEAR FLOOR SPACE AT WATER CLOSETS AND LAVATORIES

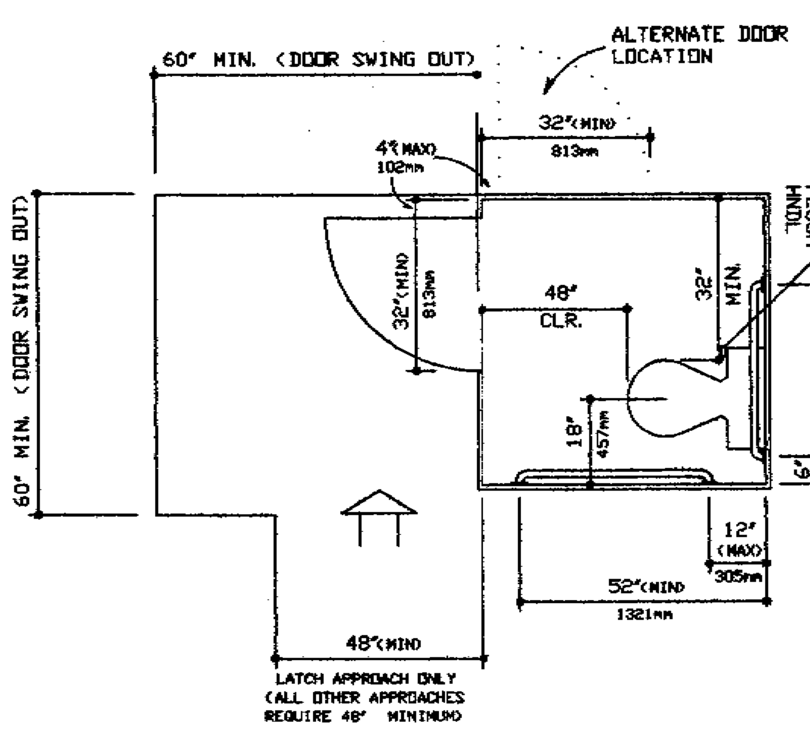

STANDARD STALL

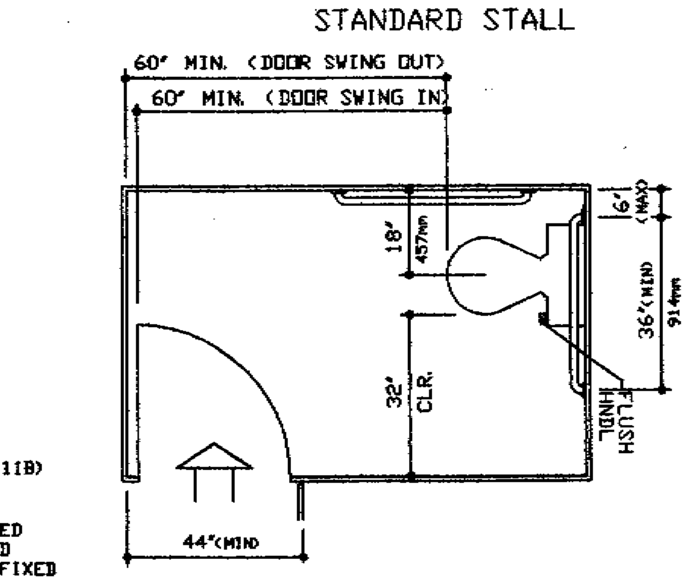

STANDARD STALL

4. 16. 1 WATER CLOSETS (PER CBC 2007 CHAPTER 11B)
ACCESSIBLE WATER CLOSETS SHALL COMPLY WITH 4. 16.

4. 16. 2 CLEAR FLOOR SPACE (PER CBC 2007 CHAPTER 11B)
CLEAR FLOOR SPACE FOR WATER CLOSETS NOT IN STALLS SHALL COMPLY WITH DIAGRAMS. CLEAR FLOOR SPACE MAY BE ARRANGED TO ALLOW EITHER A LEFT OR RIGHT-HANDED APPROACH.

4. 16. 3 HEIGHT (PER CBC 2007 CHAPTER 11B)
THE HEIGHT OF WATER CLOSETS SHALL BE 17" (IN) TO 19" (IN) (432mm TO 483mm) MEASURED TO THE TOP OF THE TOILET SEAT (SEE DIAGRAMS). SEATS SHALL NOT BE SPRUNG TO RETURN TO A LIFTED POSITION.

4. 16. 4 GRAB BARS (PER CBC 2007 CHAPTER 11B)
GRAB BARS FOR WATER CLOSETS NOT LOCATED IN STALLS SHALL COMPLY WITH ILLUSTRATIONS AND 4. 26.

4. 26. 1 GENERAL (PER CBC 2007 CHAPTER 11B)
ALL HANDRAILS AND GRAB BARS REQUIRED TO BE ACCESSIBLE BY 4. 1, 4. 8 OR 4. 9 SHALL COMPLY WITH 4. 26.

4. 26. 2 SIZE AND SPACING OF GRAB BARS AND HANDRAILS (ADA)
THE DIAMETER OR WIDTH OF THE GRIPPING SURFACES OF A HANDRAIL OR GRAB BAR SHALL BE 1 1/4" TO 1 1/2" (32mm TO 38mm), OR THE SHAPE SHALL PROVIDE AN EQUIVALENT GRIPPING SURFACE. IF HANDRAILS OR GRAB BARS ARE MOUNTED ADJACENT TO A WALL, THE SPACE BETWEEN THE WALL AND THE GRAB BAR SHALL BE 1 1/2" (38mm) (SEE FIG. 39 - A THRU C, HANDRAILS MAY BE LOCATED IN A RECESS IF THE RECESS IS A MAXIMUM OF 3" (IN) (75mm) DEEP AND EXTENDS AT LEAST 18" (IN) (455mm) ABOVE THE TOP OF THE RAIL.

4. 17. 1 LOCATION (PER CBC 2007 CHAPTER 11B)
ACCESSIBLE TOILET STALLS SHALL BE ON AN ACCESSIBLE ROUTE AND SHALL MEET THE REQUIRENENTS OF 4. 17.

4. 17. 2 WATER CLOSETS (PER CBC 2007 CHAPTER 11B)
WATER CLOSETS IN ACCESSIBLE STALLS SHALL COMPLY WITH 4. 16.

4. 17. 3 SIZE AND ARRANGEMENT (PER CBC 2007 CHAPTER 11B)
THE SIZE AND ARRANGEMENT OF THE STANDARD TOILET STALLS SHALL COMPLY WITH ILLUSTRATIONS (FIG. 30 ADA COMPLIANCE GUIDE) TOILET STALLS WITH A MINIMUM DEPTH OF 56" (IN) (1422mm) (SEE ILLUSTRATIONS) SHALL HAVE WALL-MOUNTED WATER CLOSETS. IF THE DEPTH OF A STANDARD TOILET STALL IS INCREASED AT LEAST 3" (IN) (75mm). THEN A FLOOR MOUNTED WATER CLOSET MAY BE USED. ARRANGEMENTS SHOWN FOR STANDARD TOILET STALLS MAY BE REVERSED TO ALLOW EITHER A LEFT OR RIGHT HAND APPROACH.

EXCEPTION:
IN INSTANCES OF ALTERATION WORK WHERE PROVISION OF A STANDARD STALL IS TECHNICALLY INFEASIBLE OR WHERE PLUMBING CODE REQUIREMENTS PREVENT COMBINING EXISTING STALLS TO PROVIDE SPACE AN ALTERNATE STALL (SEE ILLUSTRATIONS) MAY BE PROVIDED IN LIEU OF THE STANARD STALL.

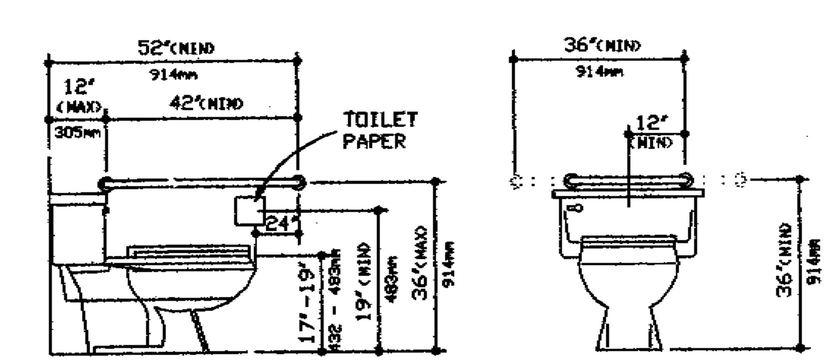

GRAB BARS AT WATER CLOSETS

4. 32. 1 MINIMUM NUMBER (PER CBC 2007 CHAPTER 11B)
FIXED OR BUILT-IN SEATING, TABLES, COUNTERS OR WORK SURFACES, REQUIRED TO BE ACCESSIBLE BY 4. 1 SHALL COMPLY WITH 4. 32

4. 32. 2 SEATING (PER CBC 2007 CHAPTER 11B)
IF SEATING SPACES FOR PEOPLE IN WHEELCHAIRS ARE PROVIDED AT TABLES, COUNTERS, OR WORK SURFACES, CLEAR FLOOR SPACE COMPLYING WITH 4. 2. 4 SHALL BE PROVIDED. SUCH CLEAR FLOOR SPACE SHALL NOT OVERLAP KNEE SPACE BY MORE THAN 19" (IN) (465mm)

4. 32. 3 KNEE CLEARANCES (PER CBC 2007 CHAPTER 11B)
IF SEATING FOR PEOPLE IN WHEELCHAIRS IS PROVIDED AT TABLES, COUNTERS AND WORK SURFACES, KNEE SPACES AT LEAST 27" (IN) (685mm) HIGH, 30" (IN) (760mm) WIDE AND 19" (IN) (485mm) DEEP SHALL BE PROVIDED (SEE SPACE REQUIREMENT DIAGRAMS)

4. 32. 4 HEIGHT OF WORK SURFACES (PER CBC 2007 CHAPTER 11B)
THE TOPS OF ACCESSIBLE TABLES, COUNTERS AND WORK SURFACES, SHALL BE FROM 28" (IN) TO 34" (IN) (710mm TO 865mm) ABOVE THE FINISH FLOOR OR GROUND.

NOTES:
1. ALL ADA (PER CBC 2007 CHAPTER 11B)

4. 18. 1 GENERAL (PER CBC 2007 CHAPTER 11B)
ACCESSIBLE URINALS SHALL COMPLY WITH 4. 18.

4. 18. 2 HEIGHT (PER CBC 2007 CHAPTER 11B)
URINALS SHALL BE STALL-TYPE OR WALL HUNG w/ELONGATED RIM AT A MAXIMUM OF 17" (IN) (432mm) ABOVE THE FINISH FLOOR.

4. 18. 3 CLEAR FLOOR SPACE (PER CBC 2007 CHAPTER 11B)
A CLEAR FLOOR SPACE 30" (IN) BY 48" (IN) (760mm BY 1219mm) SHALL BE PROVIDED IN FRONT OF URINALS TO ALLOW FORWARD APPROACH. THIS CLEAR SPACE SHALL ADJOIN OR OVERLAP AN ACCESSIBLE ROUTE AND SHALL COMPLY WITH 4. 2. 4. URINAL SHIELDS THAT DO NOT EXTEND BEYOND THE FRONT EDGE OF THE URINAL RIM MAY BE PROVIDED WITH 29" (IN) (735mm) CLEARANCE BETWEEN THEM.

4. 18. 4 FLUSH CONTROLS (PER CBC 2007 CHAPTER 11B)
FLUSH CONTROLS SHALL BE HAND OPERATED OR AUTOMATIC AND SHALL COMPLY WITH 4. 27. 4. AND SHALL BE MOUNTED NO MORE THAN 44" (IN) (1120mm) ABOVE THE FINISH FLOOR.

4. 19. 1 GENERAL (PER CBC 2007 CHAPTER 11B)
THE REQUIREMENTS OF 4. 19 SHALL APPLY TO LAVATORY FIXTURES, VANITIES, AND BUILT IN LAVATORIES.

4. 19. 2 HEIGHT AND CLEARANCES (PER CBC 2007 CHAPTER 11B)
LAVATORIES SHALL BE MOUNTED WITH THE RIM OR COUNTER SURFACE NO HIGHER THAN 34" (IN) (865mm) ABOVE THE FINISH FLOOR. PROVIDE A CLEARANCE OF AT LEAST 29" (IN) (735mm) ABOVE THE FINISH FLOOR TO THE BOTTOM OF THE APRON. KNEE AND/OR CLEARANCE SHALL COMPLY WITH FIG. 31.

4. 19. 3 CLEAR FLOOR SPACE (PER CBC 2007 CHAPTER 11B)
A CLEAR FLOOR SPACE 30" (IN) BY 48" (IN) (760mm BY 1219mm) COMPLYING WITH 4. 2. 4, SHALL BE PROVIDED IN FRONT OF A LAVATORY TO ALLOW FORWARD APPROACH. SUCH CLEAR FLOOR SPACE SHALL ADJOIN OR OVERLAP AN ACCESSIBLE ROUTE AND SHALL EXTEND A MAXIMUM OF 19" (IN) (465mm) UNDERNEATH THE LAVATORY (SEE FIG. 32).

4. 19. 4 EXPOSED PIPES AND SURFACES (PER CBC 2001 CHAPTER 11B)
HOT WATER AND DRAIN PIPES UNDER LAVATORIES SHALL BE INSULATED OR OTHERWISE CONFIGURED TO PROTECT AGAINST CONTACT, THERE SHALL BE NO SHARP OR ABRASIVE SURFACES UNDER LAVATORIES.

4. 19. 5 FAUCETS (PER CBC 2007 CHAPTER 11B)
FAUCETS SHALL COMPLY WITH 4. 27. 4 LEVER-OPERATED, PUSH TYPE AND ELECTRONICALLY CONTROLLED MECHANISMS ARE EXAMPLES OF ACCEPTABLE DESIGNS. SELF-CLOSING VALVES ARE ALLOWED IF THE FAUCET REMAINS OPEN FOR AT LEAST 10 SECONDS.

CITY OF SAN JOSE BUILDING DIVISION
B.P.#
DATE

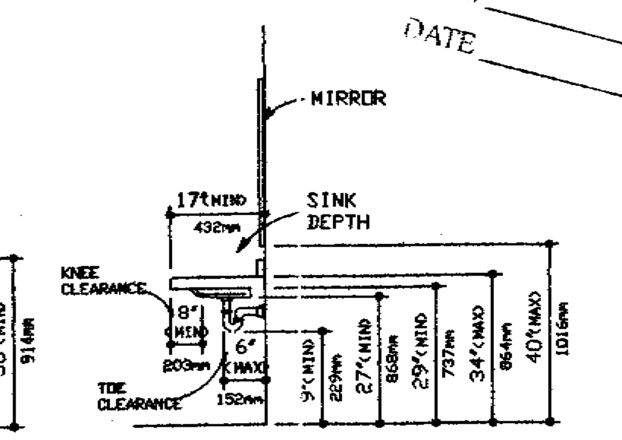

LAVATORY CLEARANCES

THE FRAZIER GROUP
DESIGN & DEVELOPMENT SERVICES
5165 DREDGER WAY
ORANGEVALE, CALIFORNIA
95662 (916) 761-9331

REGISTERED PROFESSIONAL ENGINEER WILLIAM A. HUCKABY NO. 16341 EXP. 6/30/09 CIVIL STATE OF CALIFORNIA 10-21-09

TACO BELL
170 BERNAL RD
SAN JOSE, CA

THIS DRAWING SHALL NOT BE CONSIDERED WHOLE OR ACCURATE UNTIL SIGNED BY THE ARCHITECT.

CONTACT DATE:
BUILDING STYLE
PLAN VERSION:
SITE NUMBER
TFG NUMBER
WORK DATE:
ISSUE DATE:

TACO BELL

A0.3

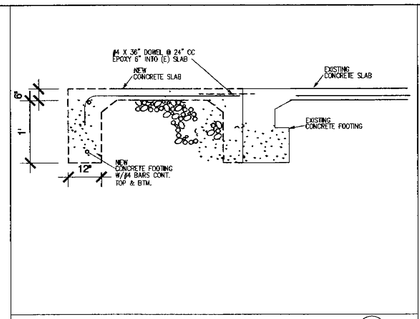

FOOTING DETAIL (1)

NOTES:
1. SEE STRUCTURALS FOR FINAL FOUNDATION PLANS
2. ALL SIDE ACCESSABLE WALKS SHALL HAVE CONTINUOUS COMMON SURFACE NOT INTERRUPTED BY SBRUPT CHANGES I LEVEL EXCEEDING 1/2" PER CBC 11338.7.1
3. ANY WALK EXCEEDING 5% SHALL COMPLY WITH CBC 11338.2.2

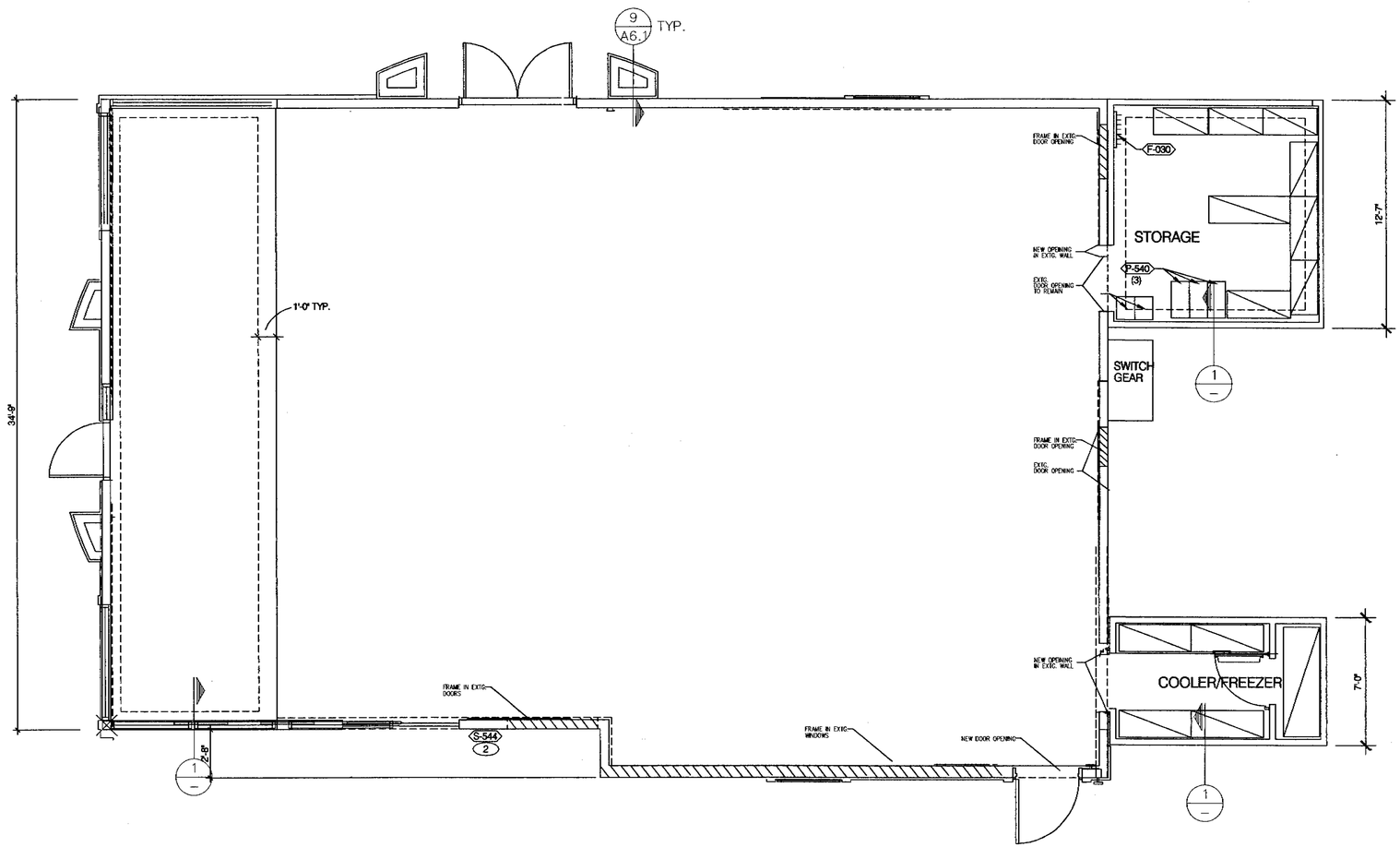

CITY OF SAN JOSE
BUILDING DIVISION
B.P.#
DATE

THE FRAZIER GROUP
DESIGN & DEVELOPMENT SERVICES

5165 DREDGER WAY
ORANGEVALE, CALIFORNIA
95662 (916) 761-9331

REGISTERED PROFESSIONAL ENGINEER
WILLIAM A. HUCKABY
NO. 16341
EXP. 6/30/99
CIVIL
STATE OF CALIFORNIA

TACO BELL
170 BERNAL RD
SAN JOSE, CA

THIS DRAWING SHALL NOT BE CONSIDERED WHOLE OR ACCURATE UNTIL SIGNED BY THE ARCHITECT.

CONTACT DATE:	
BUILDING STYLE	
PLAN VERSION:	
SITE NUMBER	
TFG NUMBER	
WORK DATE:	
ISSUE DATE:	

TACO BELL

NEW FOUNDATION PLAN

A1.0

NEW AREA

DINING AREA	785 SQFT
PUBLIC SERVICE AREA	290 SQFT
KITCHEN AREA	633 SQFT
STORAGE AREA	170 SQFT
COOLER/FREEZER	84 SQFT
REST ROOMS	137 SQFT
OFFICE	70 SQFT
TOTAL	2169

DINING RM. DOOR SEPERATION	
DIAGONAL ROOM DIMENSION	42' 8"
DISTANCE BETWEEN DOORS	27'-10"

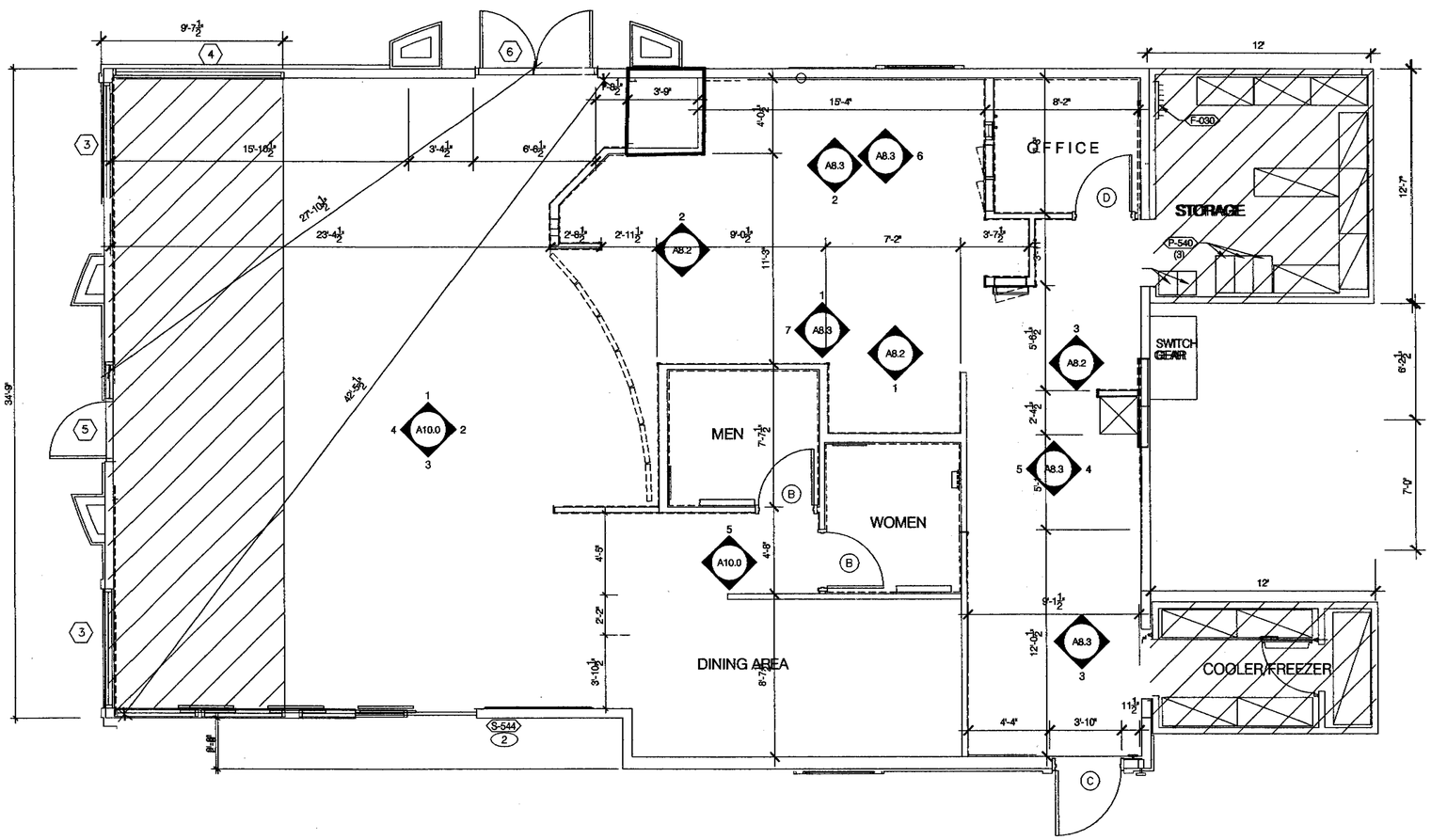

EXISTING BUILDING AREA AND OCCUPANT LOAD

TYPE	AREA	FACTOR	OCCUPANTS
DINING AREA	785 SQFT	1/PERFIXSEAT	= 60.00
PUBLIC SERVICE AREA	290 SQFT	@ 1/30SQFT	= 9.66
KITCHEN AREA	633 SQFT	@ 1/200SQFT	= 3.16
STORAGE AREA	170 SQFT	@ 1/300SQFT	= .56
COOLER/FREEZER	84 SQFT	@ 1/300SQFT	= .28
OFFICE/CLOSET	89 SQFT	@ 1/100SQFT	= .89
TOTAL			65.3

CITY OF SAN JOSE
BUILDING DIVISION
B.P.#
DATE

THE FRAZIER GROUP
DESIGN & DEVELOPMENT SERVICES

5165 DREDGER WAY
ORANGEVALE, CALIFORNIA
95662 (916) 988-8364

REGISTERED PROFESSIONAL ENGINEER
WILLIAM A. HUCKABY
NO. 16341
EXP. 6/30/09
CIVIL
STATE OF CALIFORNIA
8-21-09

2 bldg 8-21-09

TACO BELL
170 BERNAL RD
SAN JOSE, CA

THIS DRAWING SHALL NOT BE CONSIDERED WHOLE OR ACCURATE UNTIL SIGNED BY THE ARCHITECT.

CONTACT DATE:	
BUILDING STYLE	
PLAN VERSION:	
SITE NUMBER	
TFG NUMBER	
WORK DATE:	
ISSUE DATE:	

TACO BELL

NEW FLOOR PLAN

A1.1

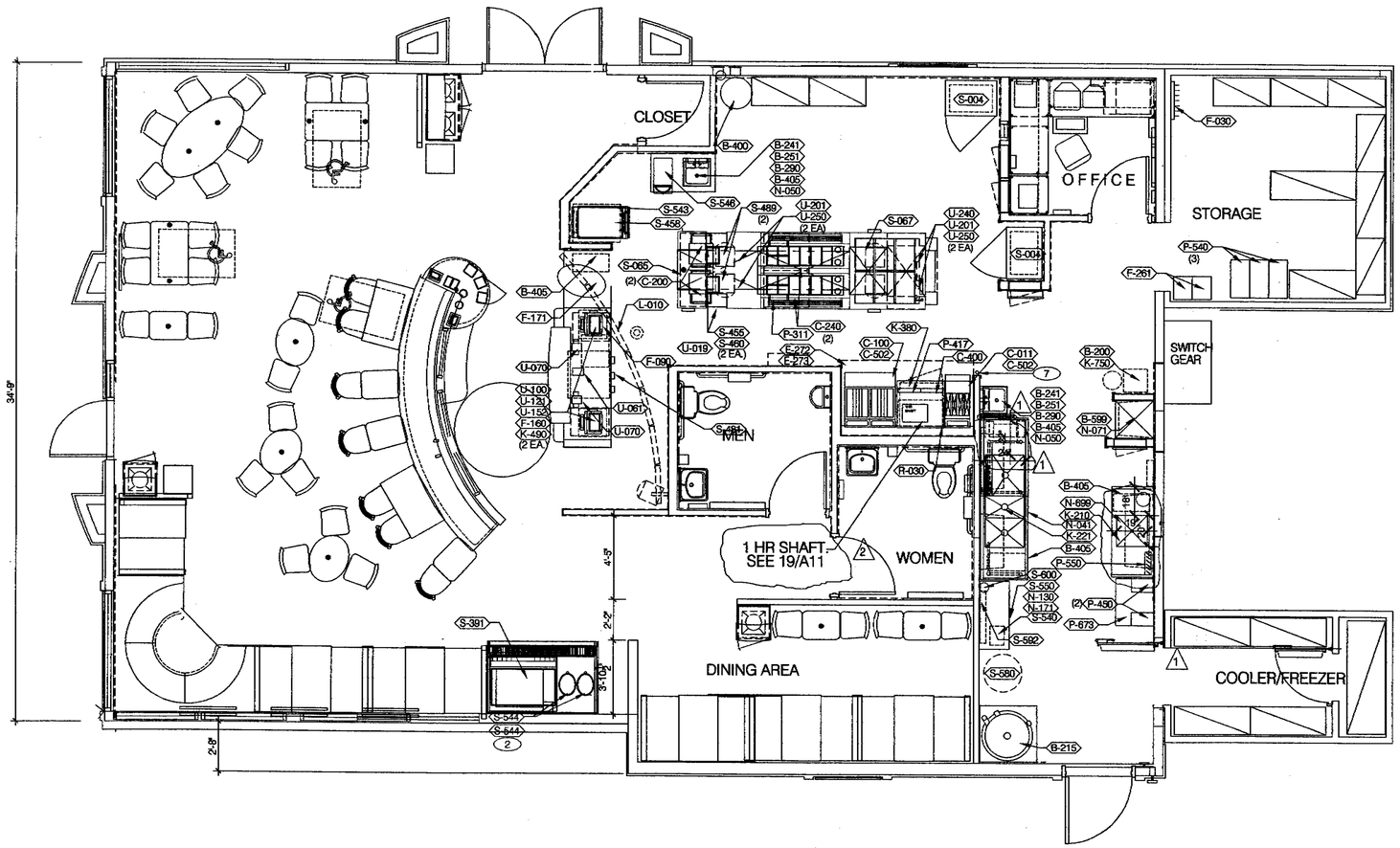

CITY OF SAN JOSE
BUILDING DIVISION
B.P. # _____
DATE _____

THE FRAZIER GROUP
DESIGN & DEVELOPMENT SERVICES

5165 DREDGER WAY
ORANGEVALE, CALIFORNIA
95662 (916) 761-9331

REGISTERED PROFESSIONAL ENGINEER
WILLIAM A. HUCKABY
NO. 18841
EXP. 6/30/10
CIVIL
STATE OF CALIFORNIA
12-21-09

1	HEALTH DEPT. 7-1-09
2	BLDG. 8-21-09

TACO BELL
170 BERNAL RD
SAN JOSE, CA

THIS DRAWING SHALL NOT BE CONSIDERED WHOLE OR ACCURATE UNTIL SIGNED BY THE ARCHITECT.

CONTACT DATE:
BUILDING STYLE
PLAN VERSION:
SITE NUMBER
TFG NUMBER
WORK DATE:
ISSUE DATE:

TACO BELL

NEW EQUIPMENT PLAN

A2.0

EQUIPMENT SCHEDULE

NO.	QTY	G.C. INST.	ITEM DESCRIPTION	MFR. & MODEL NUMBER	PLUMB	ELECT	GAS	REMARKS	NO.
			B CONTRACTOR BUILDING ELEMENTS						
B-200	1	X	WATER SOFTENER W/ BRINE TANK & SHELF	C.U.N.O. #TBSM1254E & #WATRK2304	X	X		SEE "K" SECTION FOR BASE SHELF	B-200
B-215	1	X	WATER HEATER	BRADFORD WHITE #EF-100T-199E-3N(A)	X	X	X		B-215
B-241	4	X	SOAP DISPENSER (WALL MOUNT)	KAY 3675				SURFACE MTD	B-241
B-251	2	X	SANITIZER DISPENSER	KAY 3741				SURFACE MTD.	B-251
B-265	2	X	MIRROR, 18" X 36"	BOBRICK #B-165-1836				SURFACE MTD	B-265
B-275	2	X	TOILET PAPER DISPENSER	BOBRICK #B-2890				SURFACE MTD	B-275
B-290	4	X	PAPER TOWEL DISPENSER	BOBRICK #B-262				SURFACE MTD.	B-290
B-300	2	X	GRAB BAR 1-1/2"DIA X 36" S.S. FIN.	BOBRICK #B6806X36				SURFACE MTD	B-300
B-305	2	X	GRAB BAR 1-1/2"DIA X 42" S.S. FIN.	BOBRICK #B6806X42				SURFACE MTD	B-305
B-400	1	X	WASTE BASKET - 32 GALLON	RUBBERMAID #2632 (GREY)					B-400
B-405	8	X	WASTE BASKET	RUBBERMAID SLIM JIM #3541 (GREY)					B-405
B-406	1	X	WASTE BASKET	RUBBERMAID 28 QT #2956 (BLACK)					B-406
B-410	1	X	SANITARY NAPKIN RECEPTACLE	RUBBERMAID #6140				INCLUDES ACCESSORY KIT & MOUNTING HARDWARE	B-410
B-599	1	X	MOP SINK STATION 1	ISS #WST806Y					B-599
			C COOKING EQUIPMENT						
C-011	1	X	SINGLE OPEN FRYER	PITCO #SG14-JS			X	USE GAS HOSE KIT C-502. NO ELECTRIC REQUIRED	C-011
C-100	1	X	RETHERMALIZER	PITCO #RTG14S-2	X	X	X	USE GAS HOSE KIT C-502	C-100
C-200	2	X	SPLIT LID CLAM SHELL TOASTER	STAR #GR14SPT		X		POWERED BY PRODUCTION LINE	C-200
C-240	2	X	CHEESE MELTER (DOUBLE)	A. J. ANTUNES #TBS-2X	X	X		POWERED BY PRODUCTION LINE	C-240
C-400	1	X	COOK TIMER	FAST #TBZAP12		X		FOR THE RETHERMALIZER	C-400
C-502	2	X	GAS HOSE KIT - 3/4" DIAMETER	DORMONT #1675KIT-BS36			X	FOR C-011 & C-100	C-502
			E EXHAUST HOODS/FIRE SUPP.						
E-272	1	X	TB HOOD	GEN. VENTILATION		X		PRE-PIPED FOR ANSUL SUPPRESSION	E-272
E-273	1	X	TB HOOD SHAFT 2	GEN. VENTILATION		X		PRE-PIPED FOR ANSUL SUPPRESSION	E-272
			F OFFICE/EMPLOYEE/MUSIC/MISC.						
F-001	1	X	FILE CABINET (2 DRAWER HIGH) 18" x 36" x 27"H	9336P2FIH				IN OFFICE. SEE SHEET A8.1	F-001
F-019	1	X	CHAIR - OFFICE	HON #5831				IN OFFICE. SEE SHEET A8.1	F-019
F-030	1	X	COAT HOOKS	ISS #HOOK246R2Y					F-030
F-040	1		OFFICE COMPUTER	POS PROVIDED		X		IN OFFICE. SEE SHEET A8.1	F-040
F-050	1		CREDIT CARD SATELLITE ROUTER JUNCTION	YUM		X			F-050
F-060	1		MONITOR-OFFICE	YUM				IN OFFICE. SEE SHEET A8.1	F-060
F-080	1		OFFICE PRINTER/ COPIER/ FAX/ SCANNER	POS PROVIDED		X		IN OFFICE. SEE SHEET A8.1	F-080
F-090	5		UPS (UN-INTERUPTABLE POWER SUPPLY)	POS PROVIDED		X			F-090
F-131	1		MUSIC SYSTEM	MUZAK #6848. LOCAL LEASE		X		MUZAK (LOCAL LEASE)	F-131
F-160	4	X	DROP SAFE	PERMA VAULT #PRO-10					F-160
F-171	1	X	SAFE WITH AUDIT LOCK	FIREKING #BSD2920AAXRTB		X			F-171
F-211	1	X	CLOCK	EQUITY TIME #67220				IN OFFICE. SEE SHEET A8.1	F-211
F-234	1	X	VIDEO TRAINING UNIT	TOSHIBA #MW14F52 TV/VCR/DVD		X			F-234
F-261	1 SET	X	LOCKERS	STORAGE SOLUTIONS, INC. #6367VF-723					F-261
F-270	1	X	FIRST AID KIT	SWIFT #68-UFPC				IN OFFICE. SEE SHEET A8.1	F-270
F-335	1	X	OFFICE WORKSTATION	ISS #2466MOM4EA				IN OFFICE. SEE SHEET A8.1	F-335
F-336	1	X	OFFICE WORKSTATION	ISS #2460MOS4EA				IN OFFICE. SEE SHEET A8.1	F-336
F-341	1	X	VIDEO TRAINING UNIT WORKSTATION 24"x24"	ISS #2424MOT1EA				IN OFFICE. SEE SHEET A8.1	F-341
F-452	2	X	BABY CHANGING STATION	SAFE-STRAP COMPANY #4399					F-452
F-505	2	X	STACKABLE HIGH CHAIR	MARSTON #C-30-N (NATURAL OAK)					F-505
			K WORKSTATIONS/SHELVING/CARTS						
K-210	1	X	PREP SINK WORKSTATION 50" TRACK	ISS #WST255E				WALL TRACK SHELVING	K-210
K-221	1	X	3 COMP. SINK WORKSTATION 96" TRACK	ISS #DS-1F				WALL TRACK SHELVING	K-221
K-380	1	X	FRY WORKSTATION 30"W x 30"D x 75"H	ISS #FRYTAB3030YA					K-380
K-420	1	X	CARBONATOR PLATFORM SHELF 18" X 24"	ISS #WST34Y					K-420
K-431	1	X	TORT RACK 18" x 36" x 74"	ISS #WST233YA					K-431
K-490	2	X	FRONT COUNTER SHELVING 18" x 24" x 24" (2 TIER)	ISS #WST440Y				UNDER SERVING COUNTER	K-490
K-602	1	X	SHELVING UNIT 18" X 36" X 86"H (5 TIER)	ISS #WST238Y					K-602
K-603	2	X	SHELVING UNIT 18" X 42" X 86"H (5 TIER)	ISS #SU184285Y					K-603
K-604	6	X	SHELVING UNIT 18" X 48" X 86"H (5 TIER)	ISS #SU184885Y					K-604
K-605	5	X	SHELVING UNIT 18" X 54" X 86"H (5 TIER)	ISS #SU185485Y					K-605
K-657	1	X	SHELVING UNIT 24" X 72" X 86"H (5 TIER)	ISS #SU247285Y					K-657
K-750	1	X	SHELVING UNIT FOR WATER SOFTENER	ISS #WATRK230Y					K-750

EQUIPMENT SCHEDULE

NO.	QTY	G.C. INST.	ITEM DESCRIPTION	MFR & MODEL NUMBER	PLUMB	ELECT	GAS	REMARKS	NO.
			L LIGHTING/SIGNAGE/MENUBOARDS						
L-010	1	X	INTERIOR MENU BOARD PACKAGE	EVERBRITE		X		BACK LIGHTED	L-010
L-150	1	X	SECURITY DOOR DANGER SIGN	ADVERCO#ADVCUSTOM				ORDERED DIRECT FROM YRFS	L-150
L-200	2	X	PRICE CONFIRMATION BOARD	EVERBRITE #E006875		X			L-200
			N SINKS						
N-041	1	X	3-COMP POWER SOAK 102"L x 30"D (R TO L)	METCRAFT #200PB49RX1RS53NP	X	X		W/ T & SB-2466 FAUCET & PRE-RINSE	N-041
N-050	2	X	HAND SINK (KITCHEN) W/ SPLASH GUARD 1	ADVANCE TABCO 7-YUM-20	X			W/ T & S FAUCET B-2456 & FOOT PEDAL B-0507 (FLR. MTD.)	N-050
N-071	1	X	MOP SINK FAUCET	T&S #B665BSTR	X				N-071
N-130	1	X	1 COMP. SINK FAUCET	T&S FAUCET B-2463	X			FOR N-699	N-130
N-171	1	X	1 COMP. SINK WASTE DRAIN LEVER	T&S FAUCET S-20	X			2" TWIST TYPE, FOR N-699	N-171
N-699	1	X	1 COMP PREP SINK 57"W X 27"D X 35 1/2"H	AERO #2F1211618LR	X				N-699
			P FOOD PREPARATION						
P-305	1	X	REVERSE OSMOSIS SYSTEM	EVERPURE #MRS-20T	X			REQUIRES FLOOR SINK	P-305
P-311	1	X	DUAL LINE - 157"x48" (DRY LINE)	DELFIELD #TB000P09	X	X		GRILL AND DRY WELL	P-311
P-417	1	X	8-CHANNEL TIMER	FAST #TRACK2X4TB		X		ALTERNATE: PRINCE CASTLE #755HM8TB	P-417
P-450	2	X	HOT WATER SYSTEM	BUNN-O-MATIC #H5X-40-208	X	X		W/ SHELF, BRACKET & FILTER	P-450
P-540	3	X	STORAGE BINS	RUBBERMAID #3600					P-540
P-550	1	X	KNIFE RACK	EDLUND #KR-99					P-550
P-673	1	X	WORK TABLE, 36" X 30" W/ TROUGH DRAIN 1	ISS #WST908A				FOR RETHERMALIZER AND HOT WATER	P-673
		R-030	1 **R REFRIGERATION** EEZER (RH) STD. CASTERS	DELFIELD 407CA, RH				X	
R-030	1	X	~~1/2 HT. FREEZER (RH) STD. CASTERS~~	~~DELFIELD 407CA, RH~~				~~X~~	
R-030	1	X	1/2 HT. FREEZER (RH) STD. CASTERS	DELFIELD 407CA, RH		X			R-030
			S SERVING/DRIVE-THRU						
S-004	2	X	HEAT CABINET - FULL HEIGHT - (1) LH (1) RH	BEVLES #CS82-CH8 120LH		X		W/ 8 SHELVES EACH	S-004
S-065	1	X	DESSERT TOWER	HATCO #GRBW-24D		X		MOUNT ON PRODUCTION LINE OVER SHELF	S-065
S-067	1	X	TACO TOWER (W/ INSULATED TOP PLATE)	HATCO #GRAHL30T2T		X		MOUNT ON PRODUCTION LINE OVER SHELF	S-067
S-201	1	X	DRIVE-THRU TIMER	HME #C11319		X		MOUNT @ +5'-6" A.F.F.	S-201
S-220	1	X	HEADSET HOOKS	HME #321006				IN OFFICE. SEE SHEET A8.1	S-220
S-230	1	X	BATTERY CHARGER	HME #C11124		X		ABOVE PRE-PAY WORK STATION.	S-230
S-240	1	X	OCB SWITCH BOX	DELPHI/TEXAS DIGITAL		X		WALL MOUNTED IN MANAGERS OFFICE, COMES W/OCB	S-240
S-391	1	X	SELF SERVE DRINK COUNTER	CARTER HOFFMANN #CH3-TDS72N5					S-391
S-440	2	X	FLUSH MOUNTED LID DISPENSER	TRAEX #FML-3V					S-440
S-441	1	X	FLUSH MOUNTED WRAPPED STRAW DISPENSER	TRAEX #MRB-2					S-441
S-455	2	X	BAG HOLDER	MACMILLAN WIRE#94181					S-455
S-460	2	X	TEARDROP BAG HOLDER	APW #14251					S-460
S-481	2	X	DRIVE THRU CUP DISPENSER	A.J. ANTUNES #DACS50				W/ ANGLED MOUNTING BRACKET OMNITEAM CDB-DTA	S-481
S-489	2	X	DIGITAL SCALE	EDLUND DS-10		X			S-489
S-511	2	X	ICE MAKER (PLACED ON TOP OF DRINK MACHINES)	MANITOWOC #QY1474C	X	X		W/ ROOF MOUNTED CONDENSORS	S-511
S-530	1		BEVERAGE DISPENSER - DRIVE-THRU W/HI-FLOW VALVES	CORNELIUS/REMCOR #ED 250 (8 HEAD)	X	X		W/ LID & STRAW DISPENSER	S-530
S-533	1		BEVERAGE DISPENSER - SELF-SERVE	CORNELIUS #ED 300 BCZ (12 HEAD)	X	X			S-533
S-540	1		PEPSI BOOSTER TANK		X	X		SEE SCOPE OF WORK (PEPSI)	S-540
S-543	1		FRUITISTA DISPENSER	FDB #563 WITH BUCK-N-BOOST		X		TRANSFORMER AS NEEDED	
S-544	2		TEA URN/DISPENSER	BUNN #TDO-4 (4 GALLON CAPACITY)					
S-458	1		TABLE: 24"W x 30"D	ISS #WST1333Y W/ CASTERS					
S-546	1		3-GALLON TEA BREWER	BUNN #TB3Q		X			
S-550	1		BAG-N-BOX SYRUP RACK	CORNELIUS/REMCOR BNB12B8P	X			FLO-3REG-2CRB	S-550
S-570	2		CARBONATOR	CORNELIUS/REMCOR	X	X		SHELF MOUNTED BELOW EACH DRINK DISPENSER	S-570
S-580	1		CO2 (BULK) TANK	MVE #11805373				WITHOUT IMPURITY RING	S-580
S-592	1	X	WATER FILTER SYSTEM	SELECTO #TB5/520-5	X			SEE SCOPE OF WORK	S-592
S-600	-	X	BUNDLED SYRUP LINES	CORNELIUS/REMCOR TUBE BUNDLE	X			SEE SCOPE OF WORK (PEPSI)	S-600
			U SECURITY/COMM./FIRE PROT./POS						
U-001	1	X	BASE STATION - D/T COMM. SYSTEM	HME SYSTEM #C11192 SYST.400		X		6 COMMUNICATORS, +7'-0" A.F.F.	U-001
U-019	1	X	CCTV DVR & MONITOR	MARTCO		X			U-019
U-048	1	X	SECURITY SYSTEM	ADT #TBDV40		X			U-048
U-061	3		CREDIT CARD READER (VSAT)			X			U-061
U-070	4		RECEIPT PRINTER	POS PROVIDER		X		2 FOR F/C AND 1 D/T	U-070
U-100	5		POS/ORDER ENTRY TERMINAL	POS PROVIDER		X		2 FOR F/C AND 2 D/T	U-100
U-121	4		CASH DRAWER BRACKETS	POS PROVIDER				SEE SCOPE OF WORK	U-121
U-152	4		CASH DRAWER	POS PROVIDER				SEE SCOPE OF WORK	U-152
U-201	5		KITCHEN MONITOR	POS PROVIDER		X			U-201
U-240	3	X	MONITOR CEILING MOUNT BRACKET	POS PROVIDER					U-240
U-250	6		BUMP BAR	POS PROVIDER				WITH MOUNTING PLATE	U-250
			W WALK-IN COOLERS/FREEZERS						
W-075	1	X	WALK-IN COOLER/FREEZER	ICS/KOLPAK	X	X		1 COOLER, 1 FREEZER	W-075

CITY OF SAN JOSE
BUILDING DIVISION
B.P.#
DATE

B D/T CLEARANCE BAR, SECURITY DOOR, WATER HEATER, D/T WINDOW, RESTROOM ACCESSORIES, AIR DOOR/CURTAIN, MOP SINK, HAND SINK ACC., CORNER GUARDS, MATS	N POWERSOAK, KITCHEN HAND SINKS, PREP. SINKS, DISHWASHERS
C FRYERS, OVENS, GRILLS, RETHERMALIZERS, TOASTERS, MICROWAVES	P M.A.P.S. LINES, I-LINES, PACK LINES, BREADERS, MARINATORS, HOT WATER, WORK TABLES, CHEESE MELTERS
E KITCHEN EXHAUST HOODS, FIRE SUPPRESSION EQUIPMENT	R REFRIGERATORS AND FREEZERS (NOT WALK-IN)
F SAFE, OFFICE EQUIPMENT, EMPLOYEE STORAGE/BREAK	S DRINK SYSTEMS & EQUIP., HEAT CABINETS, STAGERS, WARMERS, SERVING EQUIP., D/T EQUIP.
K SHELVING, WORKSTATIONS, CARTS, RACKS, DOLLIES	U SECURITY SYSTEM, LOCKS, CCTV, D/T COMMUNICATIONS/POS SYSTEM, POS EQUIP.
L SITE LIGHTING, SIGNAGE, MENUBOARDS	W WALK-IN COOLERS/FREEZERS

THE FRAZIER GROUP
DESIGN & DEVELOPMENT SERVICES
5165 DREDGER WAY
ORANGEVALE, CALIFORNIA
95662 (916) 761-9331

REGISTERED PROFESSIONAL ENGINEER
WILLIAM A. WOODBURY
NO. 16341
EXP. 6/30/10
CIVIL
STATE OF CALIFORNIA
10-21-09

1 HEALTH DEPT. 7-1-09
2 BLDG 8-21-09

TACO BELL
170 BERNAL RD
SAN JOSE, CA

THIS DRAWING SHALL NOT BE CONSIDERED WHOLE OR ACCURATE UNTIL SIGNED BY THE ARCHITECT.

CONTACT DATE:	
BUILDING STYLE	
PLAN VERSION:	
SITE NUMBER	
TFG NUMBER	
WORK DATE:	
ISSUE DATE:	

TACO BELL

EQUIPMENT SCHEDULE

A2.1

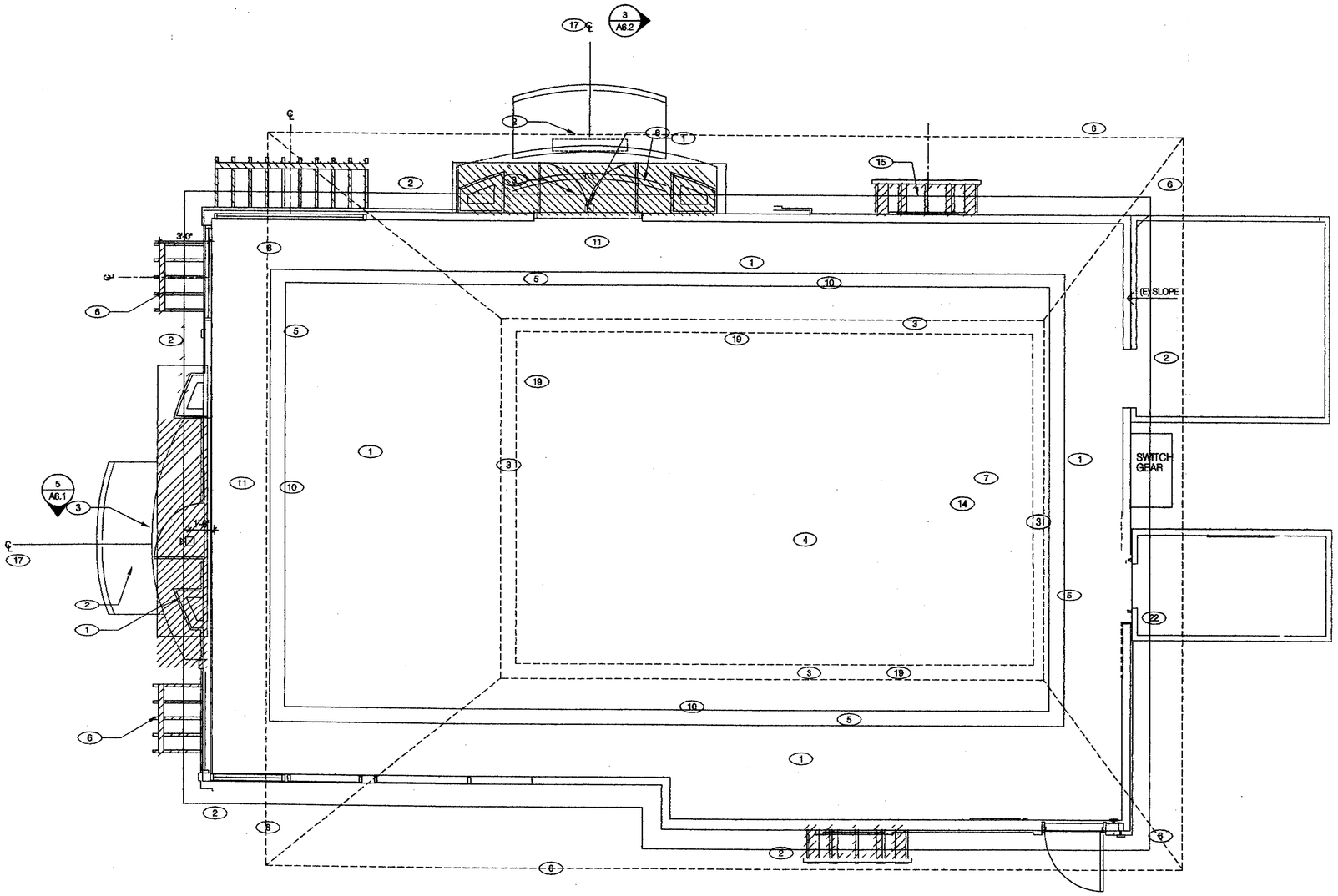

ROOF PLAN 1/4"=1'-0" | **A**

NOT USED | **E**

NOT USED | **D**

WATERPROOFING:
A. PAINT UNDERSIDE OF PARAPET CAP FLASHING WITH FACTORY BONDED PAINT GRIP OR PRIMER.
B. TOP NAILING AT PARAPET CAP FLASHING WILL NOT BE ACCEPTED.
C. PENETRATIONS IN ROOFING MEMBRANE AND FLASHING SHALL ONLY BE MADE AS INDICATED ON THE DRAWINGS OR SPECS.
D. SEE SPECIFICATIONS FOR SEALANT SPECS.
E. ALL SHEET MTL FLASHING SHALL BE 22 GA MIN.

FIRE DEPARTMENT NOTES:
A. BUILT-UP ROOF COVERING MATERIALS SHALL BEAR UL LABELS WITH FIRE EXPOSURE CLASS "A". SEE SPECS.

MISCELLANEOUS:
A. NO ROOF PENETRATIONS CLOSER THAN 12" FROM ANOTHER WILL BE ALLOWED.
B. EXHAUST FANS MIN. 10'-0" AWAY FROM ALL AIR INTAKE / SUPPLY.

■ HATCHED OBJECTS INDICATE VENDOR SUPPLIED AND INSTALLED. REFER TO SCOPE OF WORK SHEETS.

ROOF PLAN NOTES | **C**

1. REMOVE ALL EXTG ROOF STRUCTURE & TILE AND STORE TILE FOR RE-USE
2. NEW ROOF OVERHANG
3. REMOVE EXTG. PARAPET WALLS
4. REMOVEEXISTING ROOF EQUIPMENT
5. NEW PARAPET WALL
6. REMOVE (E) OVERHANG
7. (E) ROOF HATCH
8. NEW ACCENT UP-LIGHTS AT TOWERS. SEE ELECTRICAL DWGS. SEE DETAIL 19/7.0 FOR MOUNT
9. (E) ROOF TO BE REPLACED
10. PROVIDE AS REQUIRED 12x24 GALV. PREMANUFACTURED MTL. LOUVER 6'-0" O.C. PRIMED & PAINTED IN FIELD. MFR: RUSKIN (OR EQUAL) MODEL NO: L6811. SEE DETAIL 3/A7.0
11. TOWER ACCESS DOOR (24"x24"). SEE DETAILS 2/A6.1 & 12/A7.0
12. (E) ROOF DRAINS (REROUTE DRAINS & OVERFLOW, AS SHOWN, IN SEPARATE LINES WITHIN PARAPET TO EXPOSED DOWNSPOUTS AND SCUPPER ON SIDE OF BUILDING, SEE ELEVATION, SHEET A4.1) CONTRACTOR TO VERIFY EXISTING ROOF AND OVEFLOW DRAINS IS AT LEAST 3" IN SIZE.
13. (E) PARAPET WALL
14. REPLACE EXISTING HATCH WITH NEW
15. NEW EXPRESSION PANEL TRELLIS, SEE 13/A7.0. CENTER OVER EXPRESSION PANEL, SEE SHEET A1.0 FOR LOCATION.
16. NEW 2" ROOF DRAIN & OVERFLOW. DRAIN TO LOWER ROOF. ROOF DRAIN PIPING SHALL BE SCHEDULE 40 PVC PIPE ASTM A120 WITH LONG SWEEP ELBOWS. ROOF DRAIN PIPING UNDERGROUND INSIDE BUILDING, AND TO FACE OF CURB SHALL BE COATED CAST IRON HUBLESS PIPE AND FITTINGS. REFER TO DETAIL "D" THIS SHEET AND TOWER SECTION ELVATIONS ON SHEET 6.2.
17. CENTER NEW CANOPY, ARCH AND ARCH LIGHTINHG
18. EXISTING PARAPET AT +16'-6" A.F.F.
19. EXISTING LOUVER TO REMAIN.
20. PROVIDE NEW OVERFLOW DRAIN 3" DIA. PIPE THROUGH EXTERIOR WALL.
21. CHECK ALL (E) STORM DRAINS @ (E) WALL FIELD VERIFY OPERATION
22. REMOVE (E) 3" STORM DRAIN.

ROOF PLAN KEY NOTES | **B**

THE FRAZIER GROUP
DESIGN & DEVELOPMENT SERVICES
5165 DREDGER WAY
ORANGEVALE, CALIFORNIA
95662 (916) 761-9331

REGISTERED PROFESSIONAL ENGINEER
NO. 16361
EXP. 6/30/09
CIVIL
STATE OF CALIFORNIA
10-21-09

TACO BELL
170 BERNAL RD
SAN JOSE, CA

CITY OF SAN JOSE
BUILDING DIVISION
B.P.#
DATE

THIS DRAWING SHALL NOT BE CONSIDERED WHOLE OR ACCURATE UNTIL SIGNED BY THE ARCHITECT.

CONTACT DATE:
BUILDING STYLE
PLAN VERSION:
SITE NUMBER
TFG NUMBER
WORK DATE:
ISSUE DATE:

TACO BELL

DEMO ROOF PLAN

A3.1

1. SEE "GLASS SCHEDULE" FOR TYPES.
2. REFER TO FLOOR PLAN, ELEVATIONS AND WALL SECTIONS FOR ROUGH OPENING DIMENSIONS.
3. NOT USED
4. ALL DIMENSIONS FOR THIS DRAWING ARE EDGE OF FRAME TO EDGE OF FRAME.
5. ALL ALUMINUM WINDOW FRAMES SHALL HAVE A "DARK-BRONZE" ANODIZED FINISH

GLASS SCHEDULE

(A) 1" INSULATED GLASS (B) 1" INSULATED TEMPERED GLASS
(C) 1/4" TEMPERED GLASS

NOTE:
SHADING COEFFICIENT SPECIFICATION PER LOCAL CODE REQUIREMENTS.
DAYTIME VISIBILITY INTO DINING ROOM SHALL BE MAINTAINED.

NOT USED N.T.S. 10

WINDOW TYPE NOTES N.T.S. 8

NOT USED N.T.S. 4

REFERENCE KEY NOTES: (SEE SCHEDULE FOR APPLICABLE NOTES)

1. NOT USED
2. ALL HARDWARE SHALL BE US32D U.O.N.
3. ALL H/M FRAMES SHALL BE 16 GA STEEL U.O.N.
4. ALL LOCKS SHALL BE FALCON 6 PIN INTERCHANGEABLE CORE SUPPLIED AND INSTALLED BY THE G.C. ALL EXTERIOR LOCKS SHALL BE PROVIDED WITH CONSTRUCTION CORES. ALL PERMANENT CORES SHALL BE KEYED ALIKE.
5. PERMANENT CORES SHALL BE SHIPPED TO THE RESTAURANT GENERAL MANAGER.
6. MOUNT DOOR CLOSURES ON TOILET ROOM OR KITCHEN SIDE ONLY.
7. NOT USED
8. PROVIDE PUSH/ PULL PLATES.

   IF REQUIRED BY LOCAL CODE, STOREFRONT DOOR PANIC HARDWARE SHALL BE : DOR-O-MATIC 2092 RIM PANIC HARDWARE AND EXTERIOR PULLS WITH QUALITY #520 DOOR PULL.
9. MOUNT KICKPLATE ON BOTH SIDES.
10. MAXIMUM DOOR OPERATING PRESSURE : 5 LBS INTERIOR : 15 LBS EXTERIOR.
11. RESTROOM DISABLED ACCESS (BRAILLE) SIGN REQUIRED AT SIDE OF EACH DOOR - (1) MEN; (1) WOMEN
12. RESTROOM (CIRCLE & TRIANGLE) SIGNS SHALL BE PLACED ON THE DOOR AS REQUIRED BY ADA.
13. REMOVABLE MULLION.
14. WOOD DOORS SHALL BE DL-1 LAMINATE FINISH, U.N.O. FRAMES SHALL BE PAINTED. SEE FINISH SCHEDULE SHT A8.1.
15. ALL ALUMINUM STOREFRONT DOOR FRAMES SHALL HAVE AN DARK BRONZE ANODIZED FINISH.

DOOR SCHEDULE NOTES 1

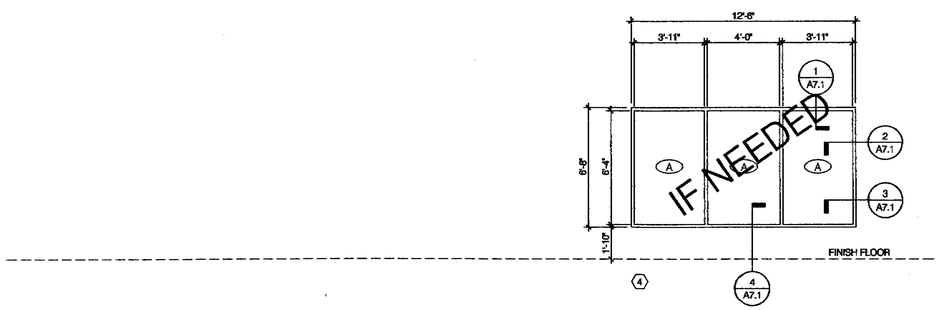

DOOR NO.	DOOR SIZE	PAIR	TYPE	DOOR	FRAME	BUTTS 1	BUTTS 2	BUTTS 3	BUTTS 4	LOCKS 1	LOCKS 2	LOCKS 3	LOCKS 4	LOCKS 5	LOCKS 6	CLOSERS 1	CLOSERS 2	CLOSERS 3	KICKPLATE 1	KICKPLATE 2	KICKPLATE 3	KICKPLATE 4	THRESHOLD 1	THRESHOLD 2	THRESHOLD 3	THRESHOLD 4	DOOR STOP 1	DOOR STOP 2	DOOR STOP 3	PUSH	PULL	MISCELLANEOUS				DETAIL LOCATIONS			DOOR KEY NOTES
			SEE DOOR TYPE ELEVATIONS			1 PR VISTA OFFSET PIVOTS (T&B)	1 1/2 PR McKINNEY #TA2731, 4-1/2" x 4-1/2"	CONT. HINGE INCLUDED IN PACKAGE	1 PR STANLEY 2060R - 4-1/2" x 4-1/2" - 28D	FALCON #T511 DG WC	EXTERIOR "LATCH GUARD"	PANIC HARDWARE INCLUDED IN PACKAGE	FALCON CORE OR C986 AS REQUIRED			SARGENT 7L65-LB (PRIV/ACY)	JACKSON S-460	DOORMAN CLOSER INCLUDED IN PACKAGE	STAINLESS STEEL 10" x 34"	KICKPLATE INCLUDED IN PACKAGE	STAINLESS STEEL 10" x 22"	STAINLESS STEEL 18" x 34"	VISTA # TH3	THRESHOLD INCLUDED IN PACKAGE			FLOOR STOP - QUALITY 4336ES	HINGE STOP - STANLEY 78 6327 (US26)	QUALITY W302-28D	PUSH PLATE #40 8"x16" - QUALITY S.S.	PULL PLATE #1810A 4" x 16" - QUALITY S.S.	SWEEP & WEATHERSTRIP INCL. IN PACKAGE	SWEEP (VISTA 231 STD) NGP 101VA	UNDERCUT 3/4"	PROVIDE A SIGN STATING THIS DOOR TO REMAIN UNLOCKED DURING BUSINESS HOURS"	COAT HOOK - IVES 571-A02	DOOR SIGN	HEAD	JAMB	SILL	PROVIDE A SIGN STATING THIS DOOR TO REMAIN UNLOCKED DURING BUSINESS HOURS"
1	3'-0" x 6'-8" x 1-3/4"		A	WD	(E)		X									X	X			X								X			X			X			X	9/A7.1	9/A7.1		6,9,10,11,12,14
2	3'-0" x 6'-8" x 1-3/4"		A	WD	(E)		X									X	X			X								X			X			X			X	9/A7.1	9/A7.1		6,9,10,11,12,14
3	4'-0" x 7'-0" x 1-3/4"		D	AL	AL	X										X	X						X									X		X				7/A7.1	7/A7.1	8/A7.1	8,10,15
4	3'-0" x 7'-0" x 1-3/4"		C	AL	AL	X										X	X						X									X		X				7/A7.1	7/A7.1	8/A7.1	8,10,15

DOOR SCHEDULE 2

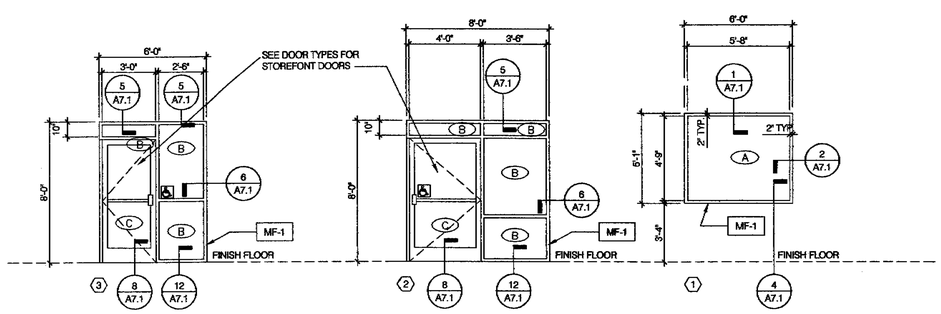

NOTE: DIMENSIONS ON THIS DWG. ARE TO FRAME EDGE REFER TO SHEET A1.0 FOR ROUGH OPENING DIMENSIONS.

WINDOW TYPES 1/4" = 1'-0" 9

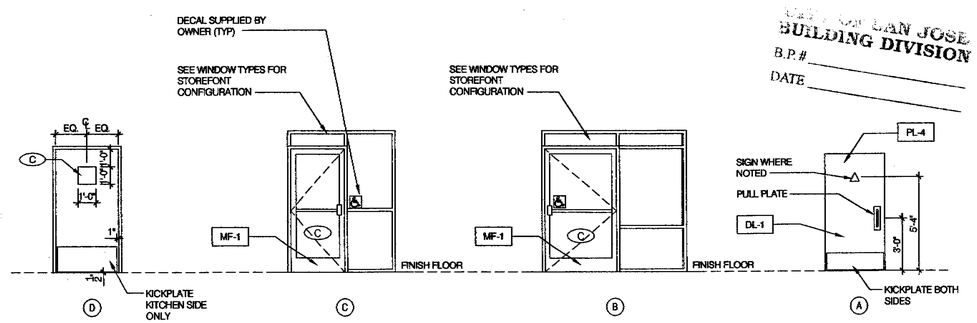

CITY OF SAN JOSE
BUILDING DIVISION
B.P.#
DATE

DENOTES FINISH MATERIAL. REFER TO SHEET A8.1 FOR FINISH SCHEDULE.

DOOR TYPES 1/4" = 1'-0" 3

THE FRAZIER GROUP
DESIGN & DEVELOPMENT SERVICES
5165 DREDGER WAY
ORANGEVALE, CALIFORNIA
95662 (916) 761-9331

REGISTERED PROFESSIONAL ENGINEER
WILLIAM B. FRAZIER
NO. 16341
EXP. 6/30/09
CIVIL
STATE OF CALIFORNIA
1-21-09

TACO BELL
170 BERNAL RD
SAN JOSE, CA

THIS DRAWING SHALL NOT BE CONSIDERED WHOLE OR ACCURATE UNTIL SIGNED BY THE ARCHITECT.

CONTACT DATE:
BUILDING STYLE
PLAN VERSION:
SITE NUMBER
TFG NUMBER
WORK DATE:
ISSUE DATE:

TACO BELL

DOOR & WDW ELEVATIONS/ SCHEDULE

A3.2

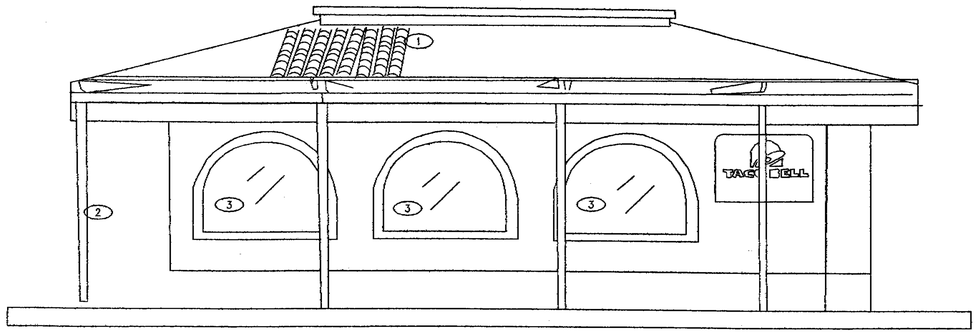

FRONT ELEVATION 1/4"=1'-0" | B

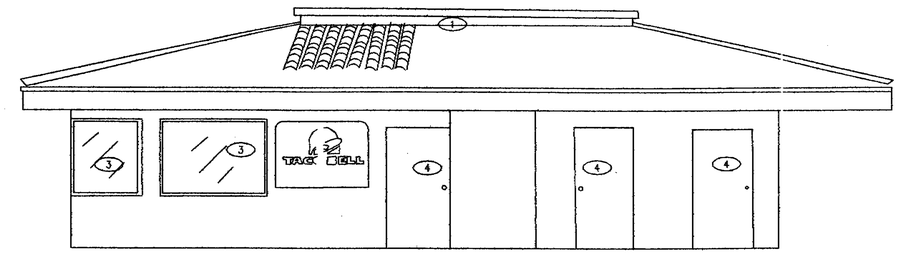

REAR ELEVATION 1/4"=1'-0" | A

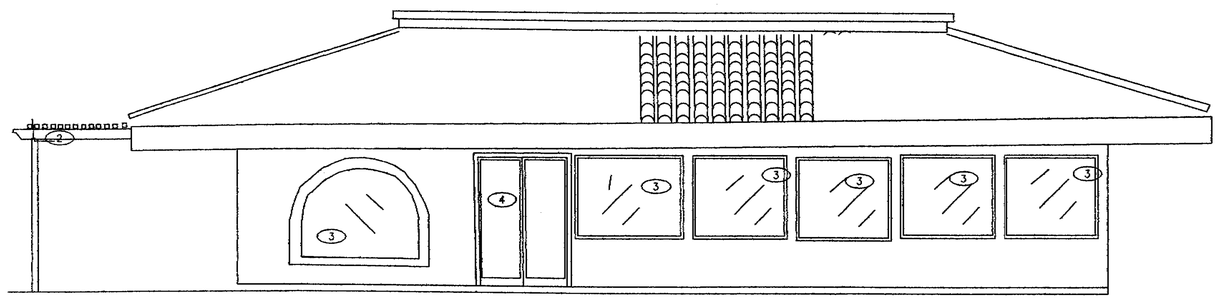

RIGHT ELEVATION 1/4"=1'-0" | C

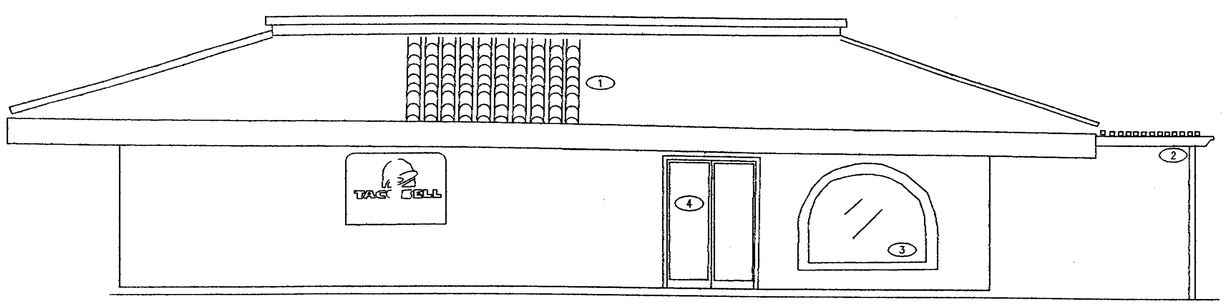

LEFT ELEVATION 1/4"=1'-0" | D

1. REMOVE ALL EXTG ROOF FRAMING & TILE AND STORE TILE FOR RE-USE
2. REMOVE TRELLIS STRUCTURE 2/ POST FOUNDATIONS
3. REMOVE WINDOWS
4. REMOVE DOORS & FRAMES
5. REMOVE (E) SIGNS & STORE

CITY OF SAN JOSE
BUILDING DIVISION
B.P.# _____
DATE _____

DEMO NOTES

THE FRAZIER GROUP
DESIGN & DEVELOPMENT SERVICES
5165 DREDGER WAY
ORANGEVALE, CALIFORNIA
95662 (916) 761-9331

REGISTERED PROFESSIONAL ENGINEER
NO. 16341
EXP. 6/30/99
CIVIL
STATE OF CALIFORNIA
10-21-99

TACO BELL
170 BERNAL RD
SAN JOSE, CA

THIS DRAWING SHALL NOT BE CONSIDERED WHOLE OR ACCURATE UNTIL SIGNED BY THE ARCHITECT.

CONTACT DATE:
BUILDING STYLE
PLAN VERSION:
SITE NUMBER
TFG NUMBER
WORK DATE:
ISSUE DATE:

TACO BELL

DEMO ELEVATIONS

4.0

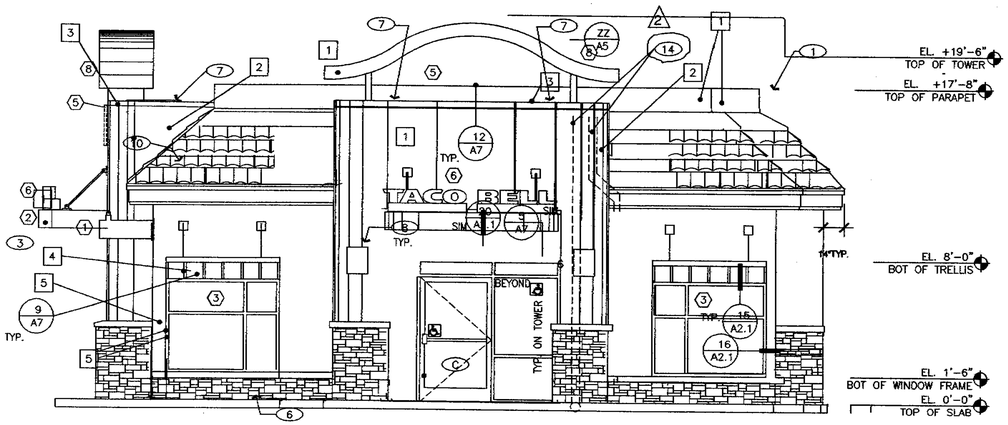

FRONT ELEVATION 1/4"=1'-0" A

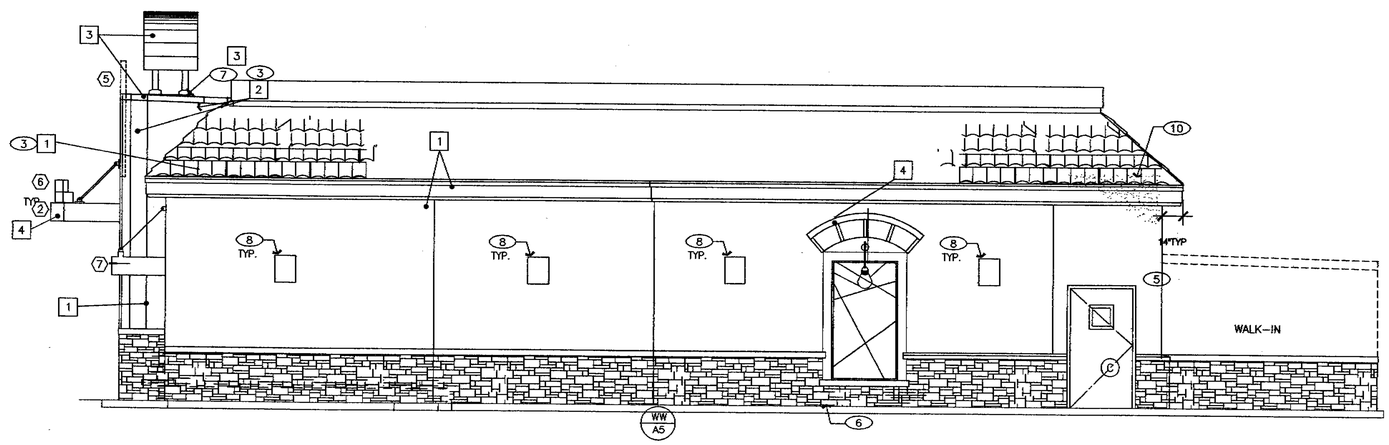

RIGHT SIDE ELEVATION

SYMBOL	AREA	MANUFACTURER	COLOR	ALTERNATE MFR.	ALTERNATE COLOR
1	MAIN WALL COLOR	SHERWIN WILLIAMS	AMBER WAVE SW6657		
2	ACCENT WALL COLOR	SHERWIN WILLIAMS	AMBER WAVE SW6657		
3	ACCENT WALL COLOR	SHERWIN WILLIAMS	ROOKWOOD CLAY SW2823		
4A	PARAPET BAND COLOR	SHERWIN WILLIAMS	GOLDEN RULE SW6383		
4B	PARAPET BAND COLOR	SHERWIN WILLIAMS	AVOCADO SW2861		
4C	PARAPET BAND COLOR	SHERWIN WILLIAMS	ROOKWOOD TERRA COTTA SW2803		
4D	PARAPET BAND COLOR	SHERWIN WILLIAMS	PLUMMY SW6558		
5	PRE-FINISHED EXTRUDED ALUMINUM DRIP EDGE	DURO-LAST	FACTORY FINISH DARK BRONZE		
6	WAINSCOT STONE	CORONADO STONE	IDAHO DRYSTACK CARMEL MOUNTAIN	OWENS CORNING CULTURED STONE	COUNTRY LEDGE STONE WALNUT - CSU2004J
	GROUT FOR STONE WAINSCOT	CUSTOM BUILDING PRODUCTS	#45 SUMMER WHEAT		
7	2" SILL	CORONADO STONE	CHABLIS CHISELED SILL		
8	PIPE BOLLARDS	SHERWIN WILLIAMS	DOT YELLOW		

EXTERIOR PAINT SCHEDULE E

EXTERIOR ELEVATION NOTES

MISCELLANEOUS
1. SEE SHT. A1.1 "WINDOW TYPE" FOR WINDOW ELEVATIONS.

STUCCO
1. COLD JOINTS WILL NOT BE ACCEPTABLE UNDER ANY CIRCUMSTANCES.
2. NOT USED.
3. ALL FASTENERS SHALL BE GALVANIZED.
4. 7/8" STUCCO OVER 3.4 SELF FURRING MTL. LATH, 2 LAYERS 60 MINUTE GRADE "D" PAPER.
5. MESH AS SPECIFIED SHALL NOT OVERLAP AT CONTROL JOINTS.
6. MESH OVERLAPS SHALL NOT COINCIDE WITH PLYWOOD JOINTS.
7. SCARIFICATION AS SPECIFIED SHALL ALWAYS BE IN THE HORIZONTAL DIRECTION.
8. INTERIOR DRYWALL SHALL ALWAYS BE INSTALLED PRIOR TO APPLICATION OF STUCCO.
9. STUCCO FINISH SHALL BE "LIGHT LACE" AS SPECIFIED BY THE STUCCO MANUFACTURERS ASSOCIATION. ALTERNATE: "MEDIUM DASHED". MACHINE APPLIED.

SEALERS (REFER TO SPECIFICATION SECTION 07920)
1. SEALANT AT ALL WALL AND ROOF PENETRATIONS.
2. SEALANT AT ALL WINDOWS AND DOOR FRAMES AT HEAD, SILL AND JAMB.

KEY NOTES 1/4"=1'-0" B

1. GALV. MTL. CAP FLASHING – PRIME & PAINT IN FIELD. SEE DET. 20/A7
2. GALV. MTL. SCUPPER & DOWNSPOUT – EXTEND TOWARDS CURB 6" @ 45 DEG. SEE DET. 13/A3.1, PRIME & PAINT IN FIELD.
3. STUCCO, TYP. – SEE STUCCO NOTES THIS SHEET
4. PIPE BOLLARD – EXISTING
5. CONTROL JOINT –TO BE CONTINUOUS ON WALL & PARAPET (TYP.) SEE DET. 14/A7 SIM. & SPECS
6. BRICK WAINSCOT W/ ROWLOCK AT TOP – 36" TYP., 48" AT TOWER LEGS SEE DETAILS 17/A7
7. 22 GA METAL ROOF OVER ROLLED BITUTHENE 60 MIL. SOLDER SEAMS.
8. WALL SCONCE – SEE SHEET E SHTS.
9. SEE SHEET E SHTS.
10. EXTG. CONC. ROOF TILE
11. EXTG. HOSE BIB
12. NOT USED
13. NEW ROOF TILE (MATCH EXTG.)
14. ROOF DRAIN & OVERFLOW 1

CITY OF SAN JOSE BUILDING DIVISION
B.P.#
DATE

THE FRAZIER GROUP
DESIGN & DEVELOPMENT SERVICES
5165 DREDGER WAY
ORANGEVALE, CALIFORNIA
95662 (916) 761-9331

REGISTERED PROFESSIONAL ENGINEER
NO. 16341
EXP. 6/30/09
CIVIL
STATE OF CALIFORNIA
8-21-09

2 BLDG 8-21-09

TACO BELL
170 BERNAL RD
SAN JOSE, CA

THIS DRAWING SHALL NOT BE CONSIDERED WHOLE OR ACCURATE UNTIL SIGNED BY THE ARCHITECT.

CONTACT DATE:
BUILDING STYLE
PLAN VERSION:
SITE NUMBER
TFG NUMBER
WORK DATE:
ISSUE DATE:

TACO BELL

NEW ELEVATIONS

A4.1

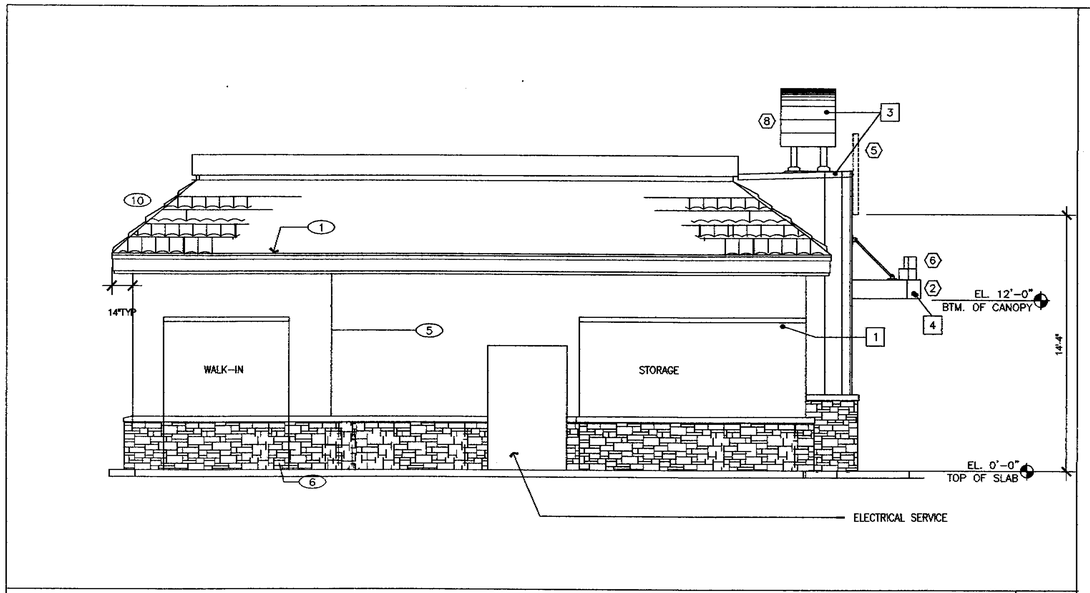

REAR ELEVATION 1/4"=1'-0" C

V-XXX	QTY	ITEM DESCRIPTION	ELEC
V-050	2	TACO BELL TOWER CANOPY 9'-2"W x 6'-5"D x 1'-0 1/4"H (a)	X
V-055	2	TACO BELL FLYING ARCH 16'-5"W x 3'-3" + 1'-3"H x 3'-0"D	
V-056	1	TACO BELL FLYING ARCH (NOTCHED) 16'-5"W x 3'-3" + 1'-3"H x 3'-0"D	
V-057	1	TACO BELL D/T CANOPY 14'-6"W x 4'-0"D x 1'-0 1/4"H (a)	X
V-060	3	TACO BELL 'BELL' SIGN 4'-10 1/2"W x 4'-6 1/4"H	X
V-065	3	TACO BELL SIGN 9'-2"W x 9 1/8"H	X
V-070	2	TACO BELL TRELLIS 7'-0"W x 1'-0"H x 3'-0"D (a)	
V-071	1	TACO BELL TRELLIS 13'-0"W x 1'-0"h X 3'-0"D (a)	
V-075	3	TACO BELL ARCHED LATTICE CANOPY (a)	•
V-062**	1	METAL BELL	
		(a) Provide dark bronze paint color	
		(b) Provide blocking for all signs, canopies and trellis'	
		* REQUIRES LIGHT FIXTURE(S). SEE ELECTRICAL.	
		** THIS ITEM IS NOT INSTALLED BY THE LOCAL SIGNAGE INSTALLER. SEE SCOPE OF WORK.	

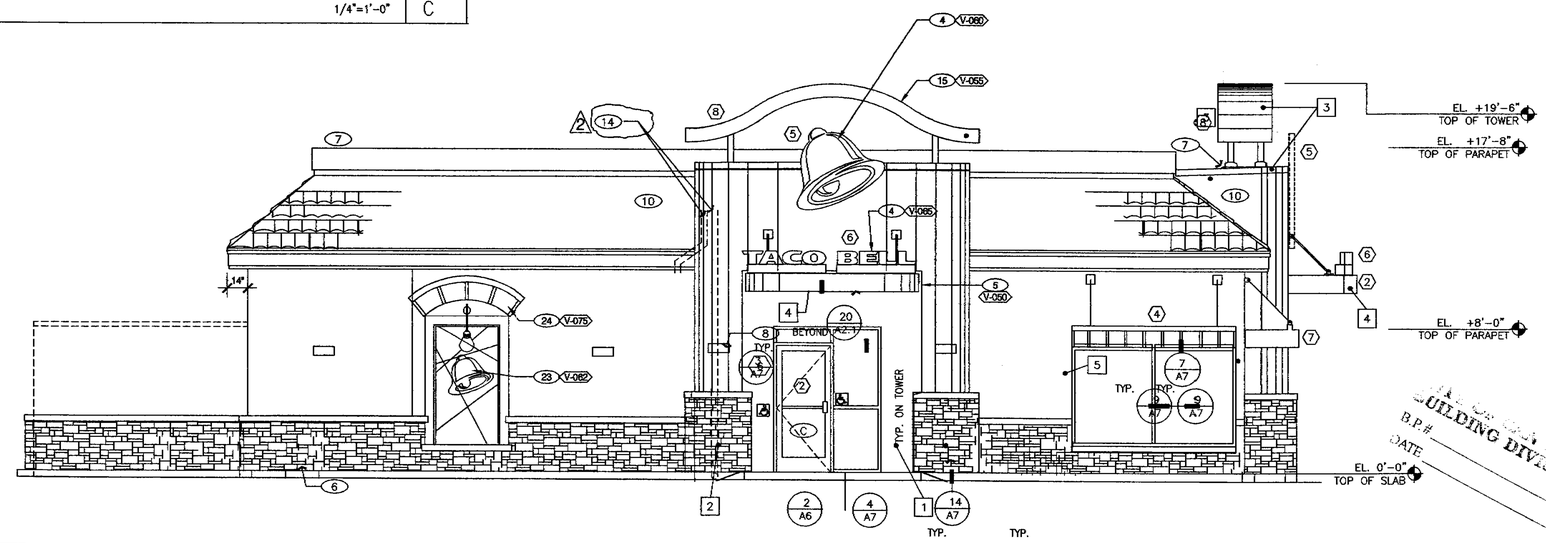

LEFT SIDE ELEVATION 1/4"=1'-0"

SYMBOL	AREA	MANUFACTURER	COLOR	ALTERNATE MFR.	ALTERNATE COLOR
1	MAIN WALL COLOR	SHERWIN WILLIAMS	AMBER WAVE SW6657		
2	ACCENT WALL COLOR	SHERWIN WILLIAMS	AMBER WAVE SW6657		
3	ACCENT WALL COLOR	SHERWIN WILLIAMS	ROOKWOOD CLAY SW2823		
4A	PARAPET BAND COLOR	SHERWIN WILLIAMS	GOLDEN RULE SW6388		
4B	PARAPET BAND COLOR	SHERWIN WILLIAMS	AVOCADO SW2861		
4C	PARAPET BAND COLOR	SHERWIN WILLIAMS	ROOKWOOD TERRA COTTA SW2803		
4D	PARAPET BAND COLOR	SHERWIN WILLIAMS	PLUMMY SW6558		
5	PRE-FINISHED EXTRUDED ALUMINUM DRIP EDGE	DURO-LAST	FACTORY FINISH DARK BRONZE		
6	WAINSCOT STONE	CORONADO STONE	IDAHO DRYSTACK CARMEL MOUNTAIN	OWENS CORNING CULTURED STONE	COUNTRY LEDGE STONE WALNUT - CSU2004J
	GROUT FOR STONE WAINSCOT	CUSTOM BUILDING PRODUCTS	#45 SUMMER WHEAT		
7	2" SILL	CORONADO STONE	CHABLIS CHISELED SILL		
8	PIPE BOLLARDS	SHERWIN WILLIAMS	DOT YELLOW		

EXTERIOR PAINT SCHEDULE E

EXTERIOR ELEVATION NOTES

MISCELLANEOUS
1. SEE SHT. A1.1 "WINDOW TYPE" FOR WINDOW ELEVATIONS.

STUCCO
1. COLD JOINTS WILL NOT BE ACCEPTABLE UNDER ANY CIRCUMSTANCES.
2. STUCCO TRANSITIONS EXTG. TO NEW TO BE SEAMLESS
3. ALL FASTENERS SHALL BE GALVANIZED.
4. 7/8" STUCCO OVER 3.4 SELF FURRING MTL. LATH, 2 LAYERS 60 MINUTE GRADE "D" PAPER.
5. MESH AS SPECIFIED SHALL NOT OVERLAP AT CONTROL JOINTS.
6. MESH OVERLAPS SHALL NOT COINCIDE WITH PLYWOOD JOINTS.
7. SCARIFICATION AS SPECIFIED SHALL ALWAYS BE IN THE HORIZONTAL DIRECTION.
8. INTERIOR DRYWALL SHALL ALWAYS BE INSTALLED PRIOR TO APPLICATION OF STUCCO.
9. STUCCO FINISH SHALL BE "LIGHT LACE" AS SPECIFIED BY THE STUCCO MANUFACTURERS ASSOCIATION. ALTERNATE: "MEDIUM DASHED". MACHINE APPLIED.

SEALERS (REFER TO SPECIFICATION SECTION 07920)
1. SEALANT AT ALL WALL AND ROOF PENETRATIONS.
2. SEALANT AT ALL WINDOWS AND DOOR FRAMES AT HEAD, SILL AND JAMB.

KEY NOTES D

1. GALV. MTL. CAP FLASHING – PRIME & PAINT IN FIELD. SEE DET. 20/A7
2. GALV. MTL. SCUPPER & DOWNSPOUT – EXTEND TOWARDS CURB 6" @ 45 DEG. SEE DET. 13/A3.1, PRIME & PAINT IN FIELD.
3. STUCCO, TYP. – SEE STUCCO NOTES THIS SHEET
4. PIPE BOLLARD – EXISTING
5. CONTROL JOINT –TO BE CONTINUOUS ON WALL & PARAPET (TYP.) SEE DET. 14/A7 SIM. & SPECS
6. BRICK WAINSCOT W/ ROWLOCK AT TOP – 36" TYP., 48" AT TOWER LEGS SEE DETAILS 17/A7
7. 22 GA METAL ROOF OVER ROLLED BITUTHENE 60 MIL. SOLDER SEAMS.
8. WALL SCONCE – SEE SHEET E SHTS.
9. SEE SHEET E SHTS.
10. EXTG. CONC. ROOF TILE
11. EXTG. HOSE BIB
12. NOT USED
13. NEW ROOF TILE (MATCH EXTG.)
14. ROOF DRAIN & OVERFLOW /1

THE FRAZIER GROUP
DESIGN & DEVELOPMENT SERVICES
5165 DREDGER WAY
ORANGEVALE, CALIFORNIA
95662 (916) 761-9331

REGISTERED PROFESSIONAL ENGINEER
WILLIAM R. PUCKETT
NO. 16594
EXP. 6/30/09
CIVIL
STATE OF CALIFORNIA

2 BLDG. 8-21-09
1
1
1

TACO BELL
170 BERNAL RD
SAN JOSE, CA

BUILDING DIVISION
B.P.#
DATE

THIS DRAWING SHALL NOT BE CONSIDERED WHOLE OR ACCURATE UNTIL SIGNED BY THE ARCHITECT.

CONTACT DATE:	
BUILDING STYLE	
PLAN VERSION:	
SITE NUMBER	
TFG NUMBER	
WORK DATE:	
ISSUE DATE:	

TACO BELL

NEW ELEVATIONS

A4.2

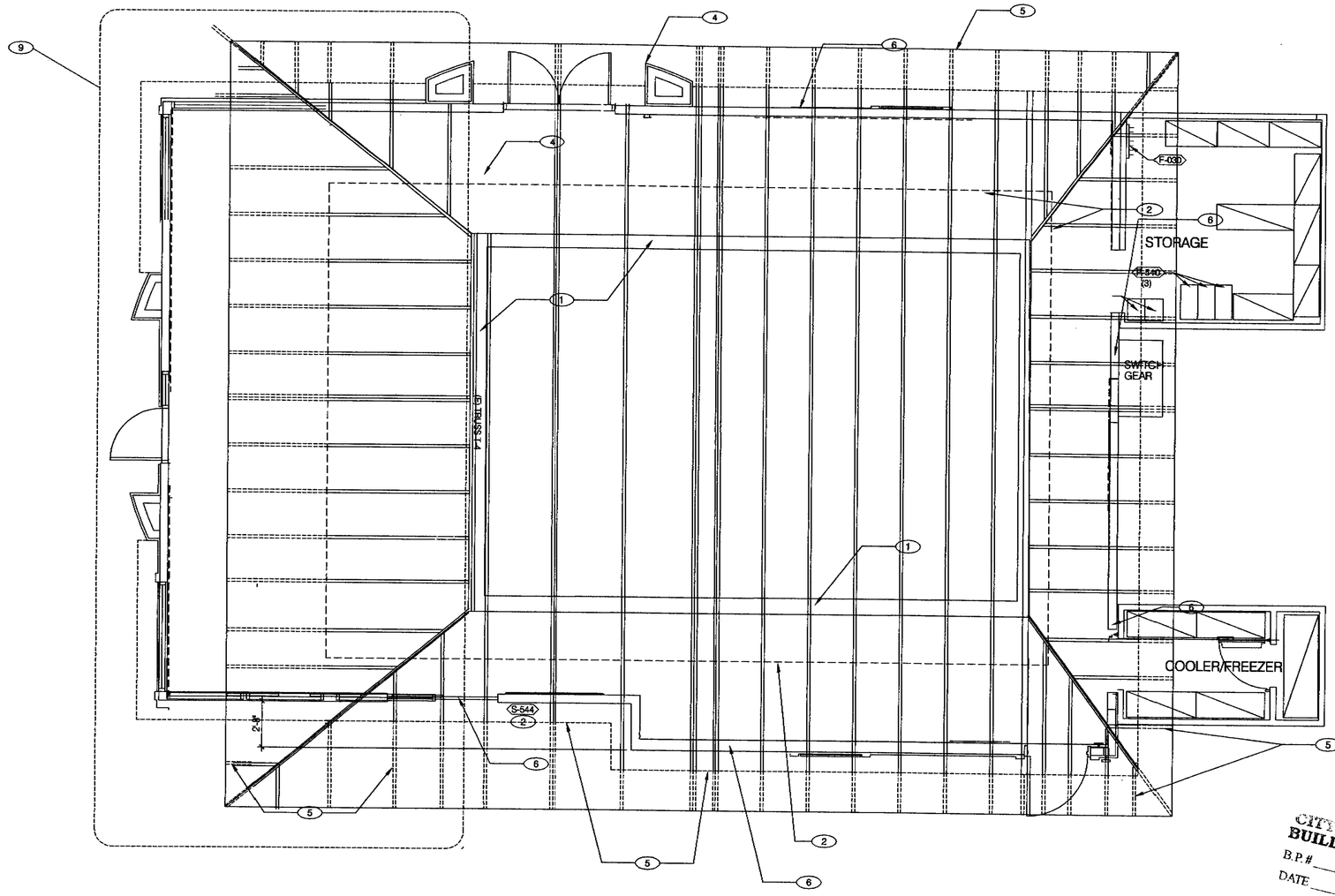

CITY OF SAN JOSE
BUILDING DIVISION
B.P.#
DATE

MODIFIED ROOF TRUSS PLAN 1/4"=1'-0" | **A**

1. EXISTING PARAPET WALL TO REMAIN
2. NEW PARAPET CONSTUCTION SHOWN HATCHED. SEE A6.0 FOR EXTERIOR WALL SECTION
3. EXISTING SHEATHING TO REMAIN (TYPICAL)
4. NEW TACO BELL TOWER
5. REMOVE EXISTING TRUSS TAIL (TYPICAL) (SHOWN DASHED)
6. EXISTING EXTERIOR WALLS BELOW
7. DO NOT TRIM TRUSS TAILS THIS AREA ONLY
8. (E) WALL BEYOND
9. REMOVE ALL TRUSSESS THIS AREA

TYPICAL ROOF TRUSS

DEMO AS NOTED IN KEY NOTES

KEY NOTES | **B**

THE FRAZIER GROUP
DESIGN & DEVELOPMENT SERVICES
5165 DREDGER WAY
ORANGEVALE, CALIFORNIA
95662 (916) 761-9331

REGISTERED PROFESSIONAL ENGINEER
WILLIAM A. HUCKABY
NO. 16341
EXP. 6/30/99
CIVIL
STATE OF CALIFORNIA

TACO BELL
170 BERNAL RD
SAN JOSE, CA

THIS DRAWING SHALL NOT BE CONSIDERED WHOLE OR ACCURATE UNTIL SIGNED BY THE ARCHITECT.

CONTACT DATE:	
BUILDING STYLE	
PLAN VERSION:	
SITE NUMBER	
TFG NUMBER	
WORK DATE:	
ISSUE DATE:	

TACO BELL

TRUSS MODIFICATION PLAN

A5.0

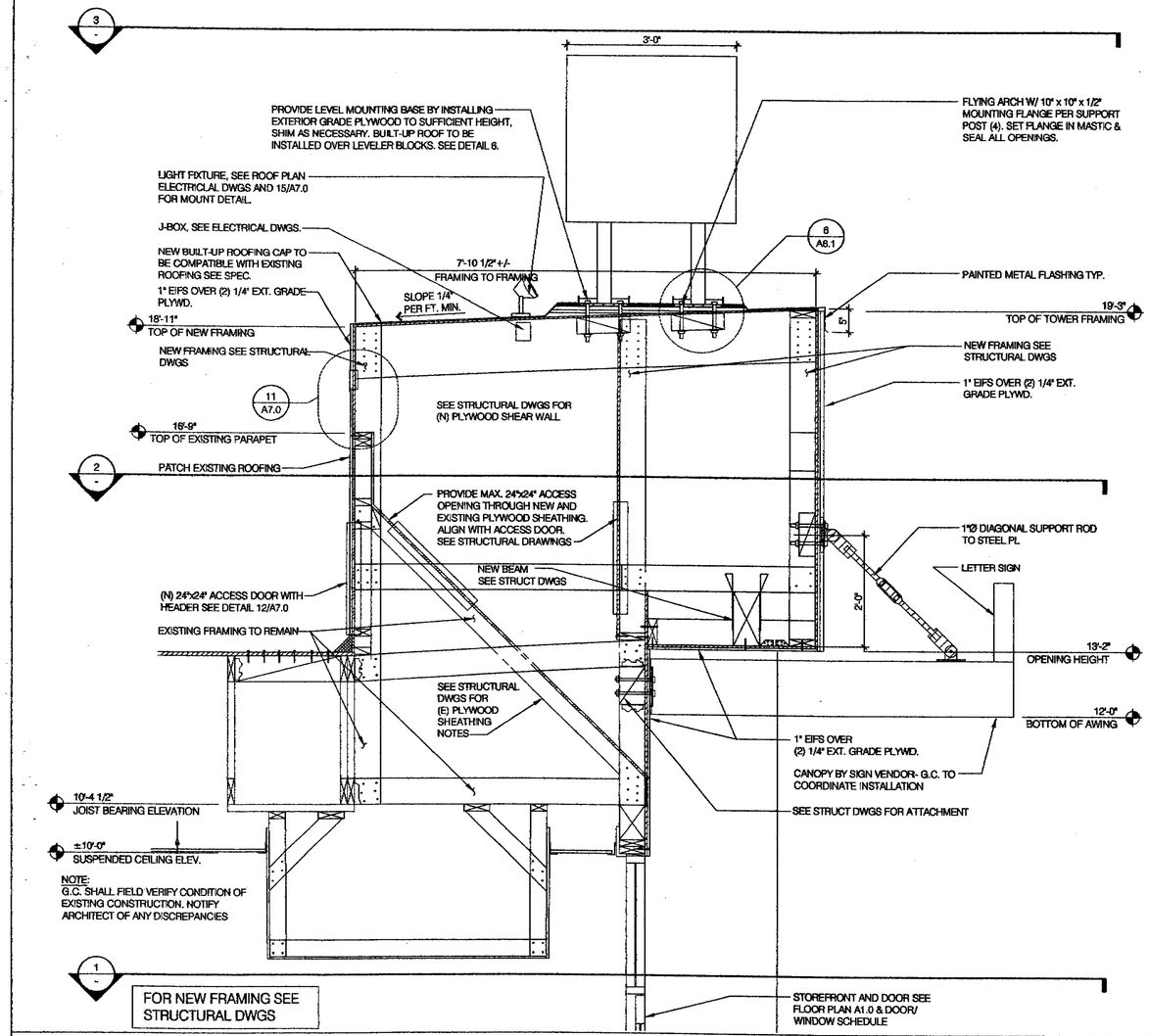

SECTION THRU TACO BELL TOWER 3/4"=1'-0" | 5

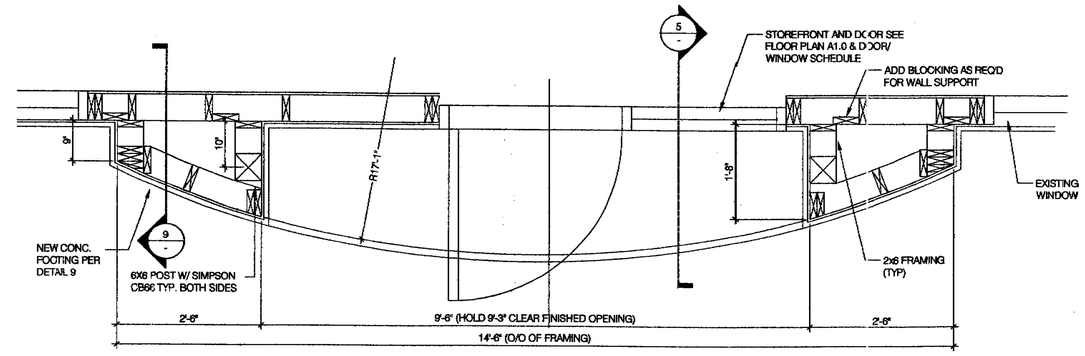

SECTION THRU TACO BELL TOWER AT DOOR LEVEL 3/4"=1'-0" | 1

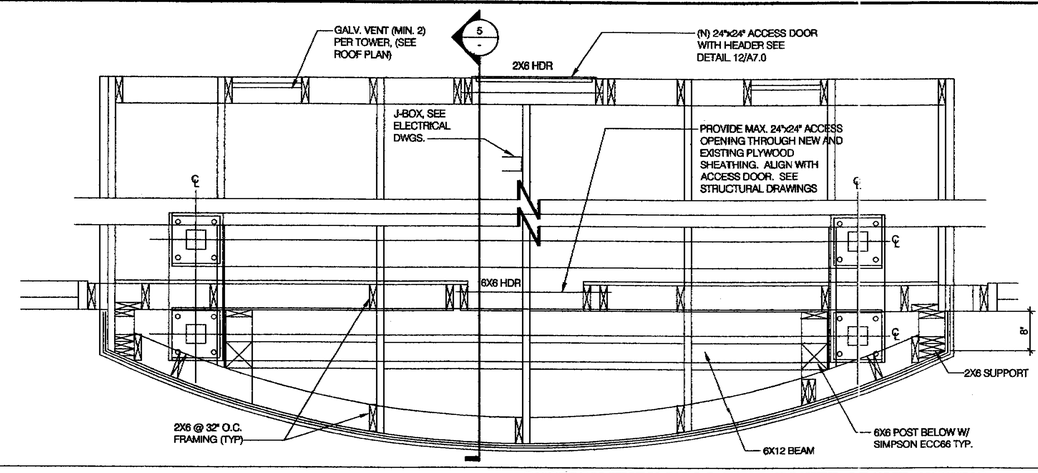

SECTION THRU TACO BELL TOWER ABOVE AWNING 3/4"=1'-0" | 2

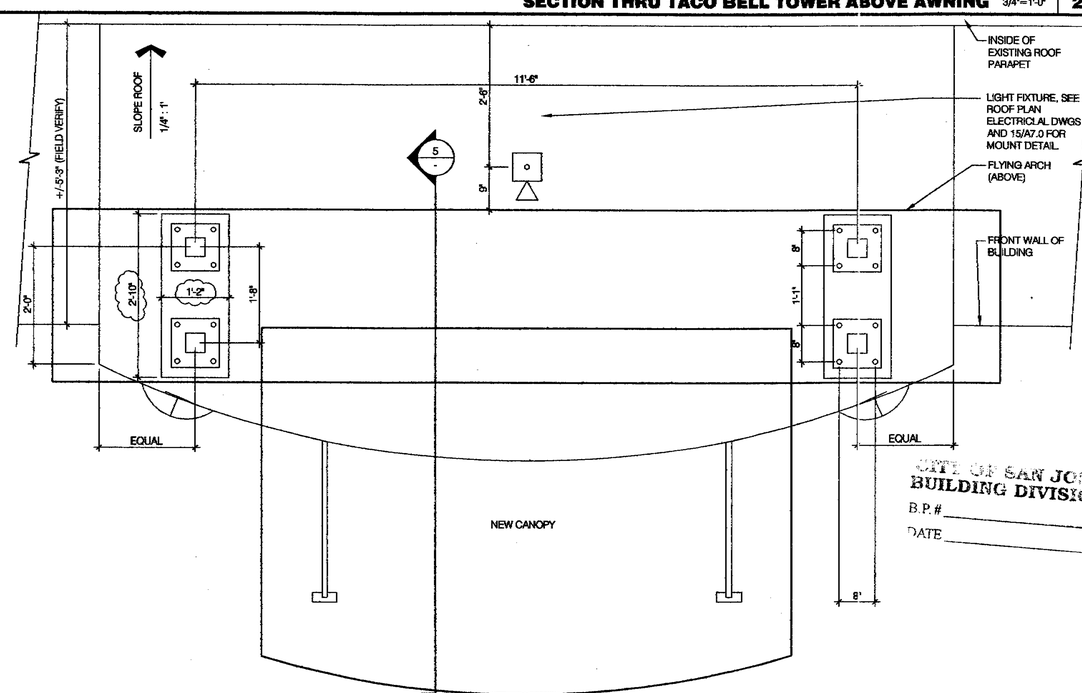

CITY OF SAN JOSE
BUILDING DIVISION
B.P. #
DATE

TACO BELL TOWER ROOF PLAN 3/4"=1'-0" | 3

NOTE:
SEE DEMO NOTE 'A', SHEET D1.0

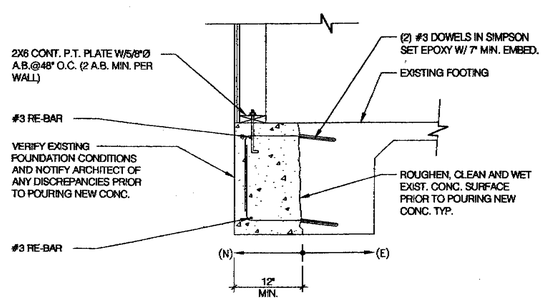

FOUNDATION FOR T.B. TOWER 3/4"=1'-0" | 9

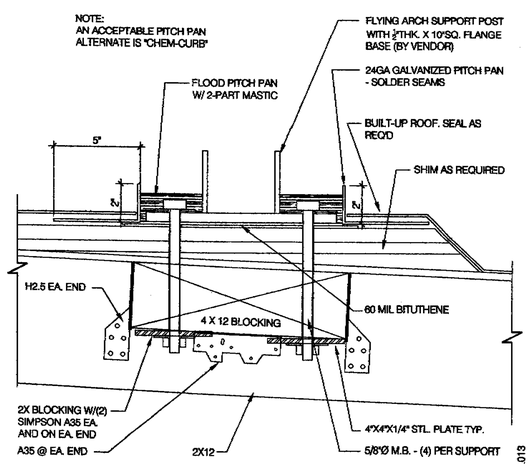

FLYING ARCH PITCH POCKET 3"=1'-0" | 6

THE FRAZIER GROUP
DESIGN & DEVELOPMENT SERVICES

5165 DREDGER WAY
ORANGEVALE, CALIFORNIA
95662 (916) 761-9331

REGISTERED PROFESSIONAL ENGINEER
NO. 18371
EXP. 6/30/09
CIVIL
STATE OF CALIFORNIA
12-N-08

TACO BELL
170 BERNAL RD
SAN JOSE, CA

THIS DRAWING SHALL NOT BE CONSIDERED WHOLE OR ACCURATE UNTIL SIGNED BY THE ARCHITECT.

CONTACT DATE:
BUILDING STYLE
PLAN VERSION:
SITE NUMBER
TFG NUMBER
WORK DATE:
ISSUE DATE:

TACO BELL

TOWER PLANS & SECTIONS

A6.1

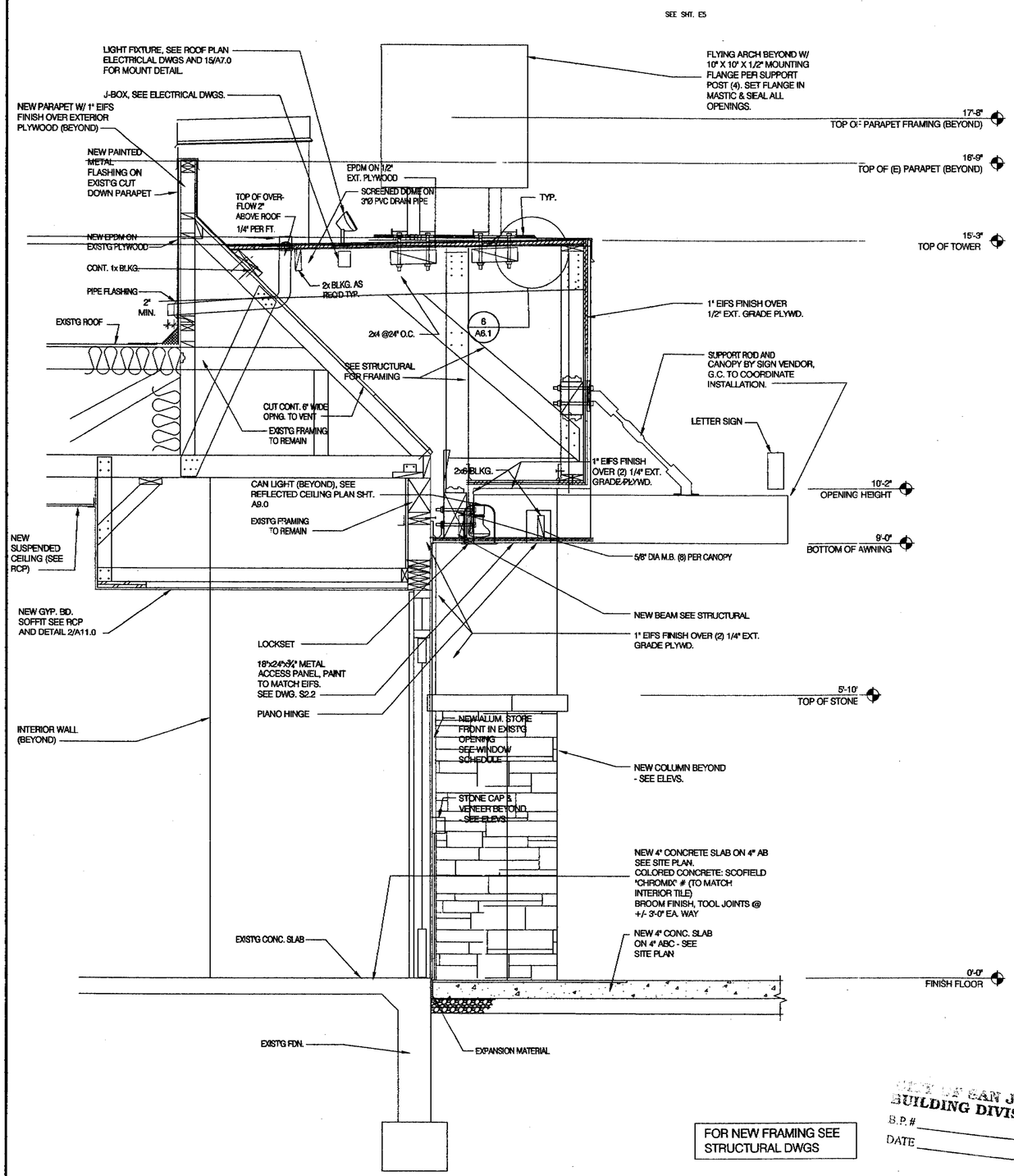

FOR NEW FRAMING SEE STRUCTURAL DWGS

CITY OF SAN JOSE BUILDING DIVISION
B.P.# _____
DATE _____

EXTENDED TOWER SECTION AT LEFT SIDE 3/4"=1'-0" | 3

THE FRAZIER GROUP
DESIGN & DEVELOPMENT SERVICES
5165 DREDGER WAY
ORANGEVALE, CALIFORNIA
95662 (916) 761-9331

REGISTERED PROFESSIONAL ENGINEER WILLIAM ALBERT BOLLER NO. 16341 EXP. 6/30/09 CIVIL STATE OF CALIFORNIA 12-21-08

TACO BELL
170 BERNAL RD
SAN JOSE, CA

THIS DRAWING SHALL NOT BE CONSIDERED WHOLE OR ACCURATE UNTIL SIGNED BY THE ARCHITECT.

CONTACT DATE:	
BUILDING STYLE	
PLAN VERSION:	
SITE NUMBER	
TFG NUMBER	
WORK DATE:	
ISSUE DATE:	

TACO BELL

TOWER PLANS & SECTIONS

A6.2

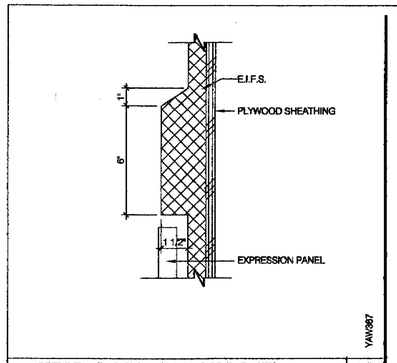

HEAD @ EXPRESSION PANEL 3"=1'-0" | 17

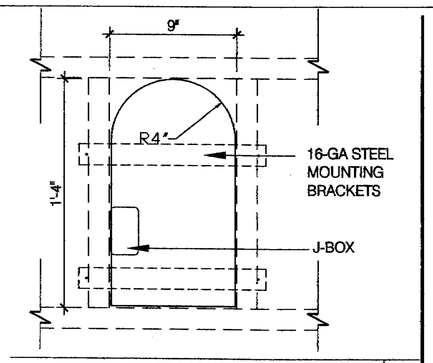

OPEN LATE SIGN ELEVATION N.T.S | 13

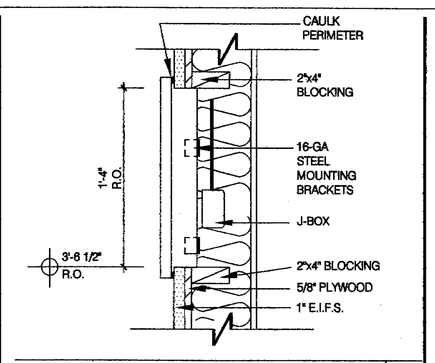

OPEN LATE SIGN SECTION N.T.S | 9

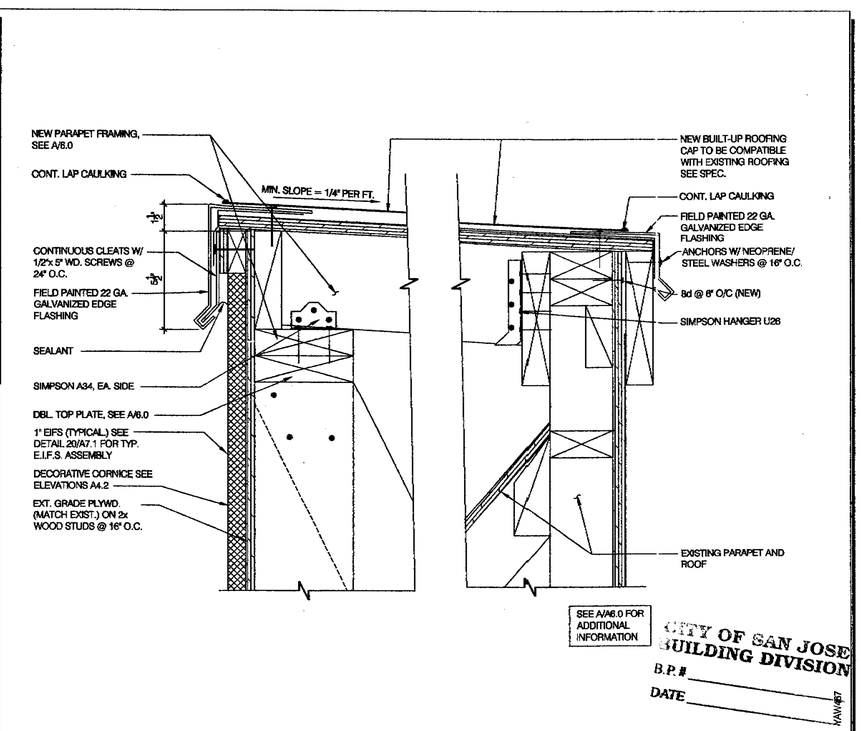

CITY OF SAN JOSE
BUILDING DIVISION
B.P.#
DATE

PARAPET CAP 3" = 1'-0" | 2

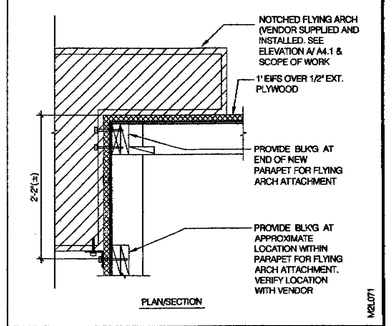

NOTCHED ARCH PLAN/SECTION 1"=1'-0" | 18

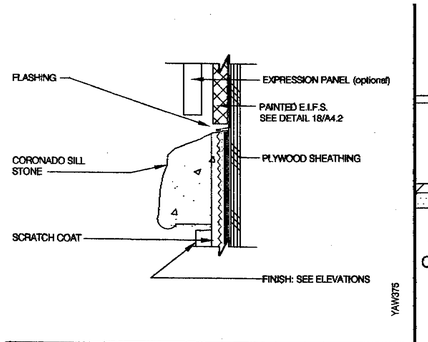

SILL @ EXPRESSION PANEL 3"=1'-0" | 14

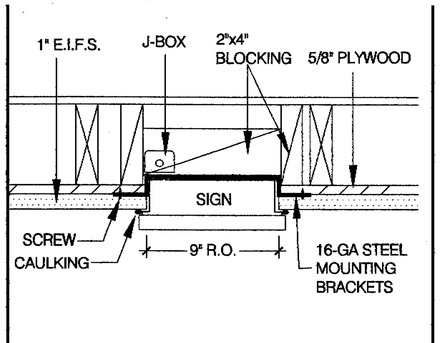

OPEN LATE SIGN PLAN VIEW N.T.S | 10

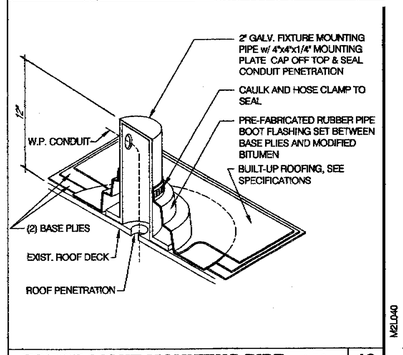

TOWER LIGHT MOUNTING PIPE N.T.S. | 19

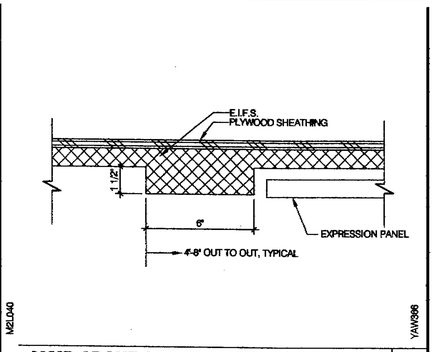

JAMB ABOVE STONE @ EXP. PANEL 3"=1'-0" | 15

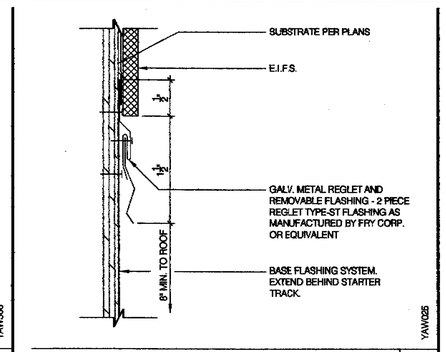

EIFS TO BASE FLASHING N.T.S. | 11

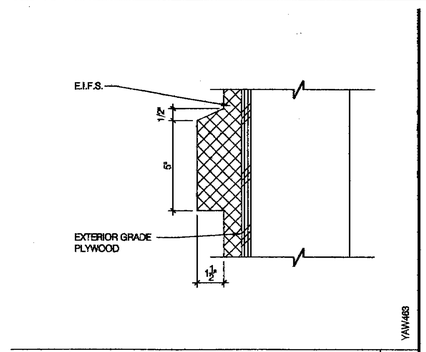

E.I.F.S BAND 3" = 1'-0" | 7

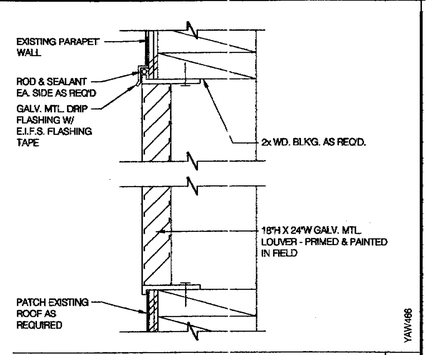

LOUVER DETAIL 3" = 1'-0" | 3

NOT USED | 20

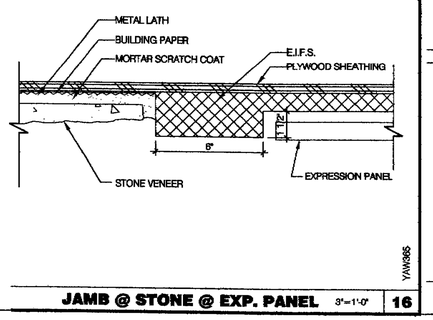

JAMB @ STONE @ EXP. PANEL 3"=1'-0" | 16

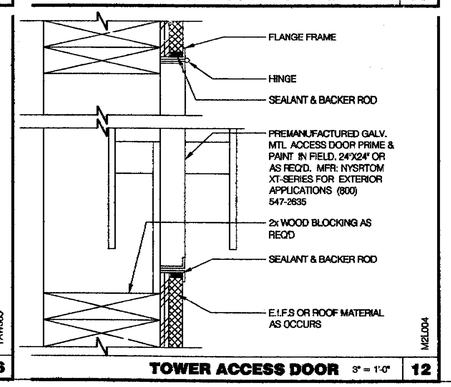

TOWER ACCESS DOOR 3" = 1'-0" | 12

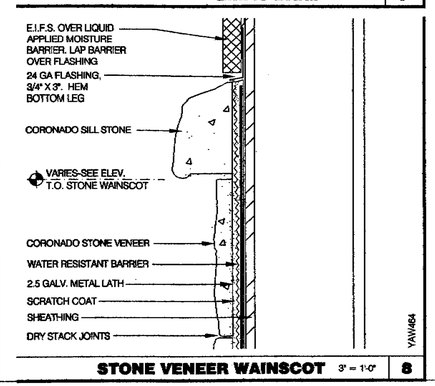

STONE VENEER WAINSCOT 3" = 1'-0" | 8

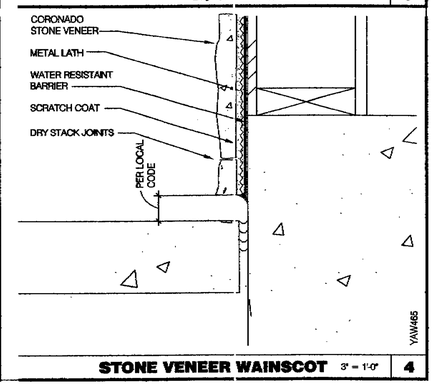

STONE VENEER WAINSCOT 3" = 1'-0" | 4

THE FRAZIER GROUP
DESIGN & DEVELOPMENT SERVICES
5165 DREDGER WAY
ORANGEVALE, CALIFORNIA
95662 (916) 761-9331

REGISTERED PROFESSIONAL ENGINEER
WILLIAM A. HUCKABY
NO. 16341
EXP. 6/30/09
CIVIL
STATE OF CALIFORNIA

TACO BELL
170 BERNAL RD
SAN JOSE, CA

THIS DRAWING SHALL NOT BE CONSIDERED WHOLE OR ACCURATE UNTIL SIGNED BY THE ARCHITECT.

CONTACT DATE:
BUILDING STYLE
PLAN VERSION:
SITE NUMBER
TFG NUMBER
WORK DATE:
ISSUE DATE:

TACO BELL

EXTERIOR CONSTRUCTION DETAILS

A7.0

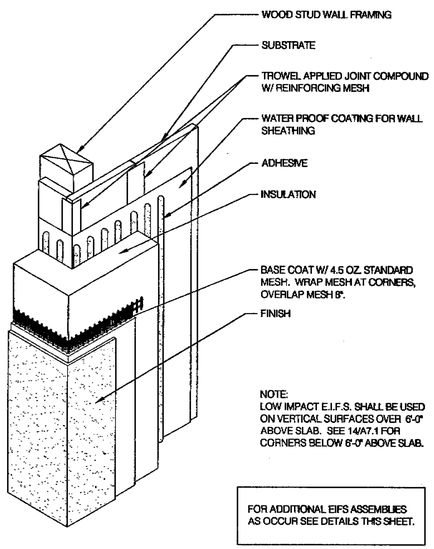

EIFS CORNER LOW-IMPACT N.T.S. | 18

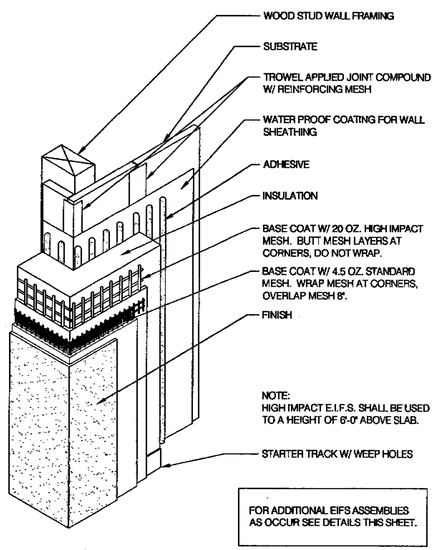

EIFS CORNER HIGH-IMPACT N.T.S. | 14

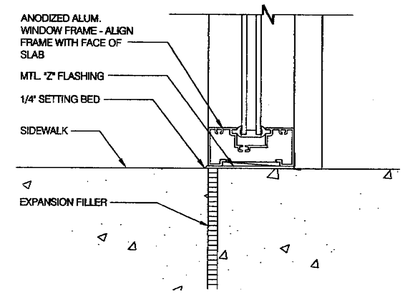

INTERIOR DOOR HEAD / JAMB 3" = 1'-0" | 9

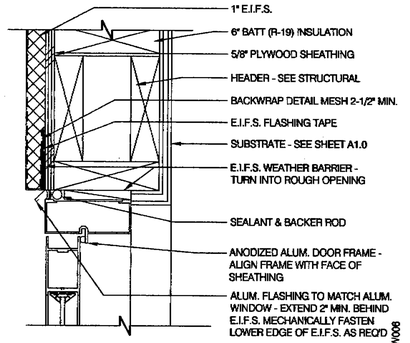

ALUMINUM DOOR HEAD/JAMB 3" = 1'-0" | 5

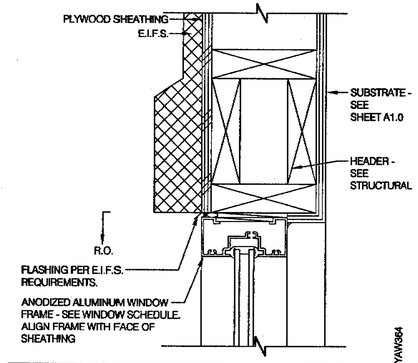

WINDOW HEAD 3" = 1'-0" | 1

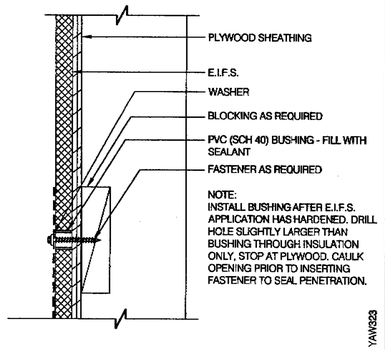

CONNECTION THRU E.I.F.S. 3"=1'-0" | 10

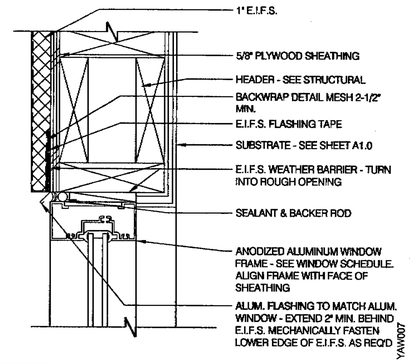

WINDOW HEAD/ JAMB ABV. CHR. RAIL 3" = 1'-0" | 6

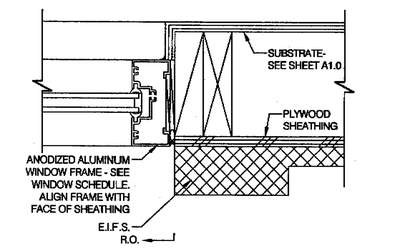

JAMB ABOVE STONE VENEER 3" = 1'-0" | 2

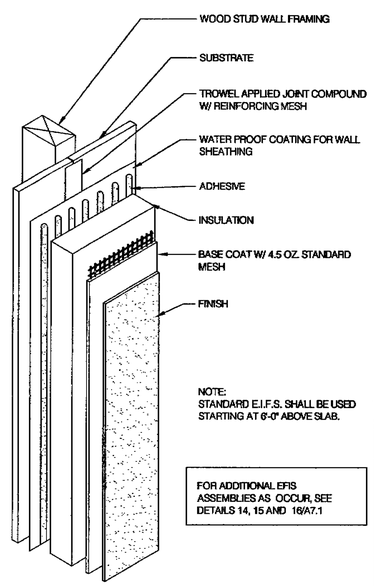

EIFS SYSTEM ISO N.T.S. | 20

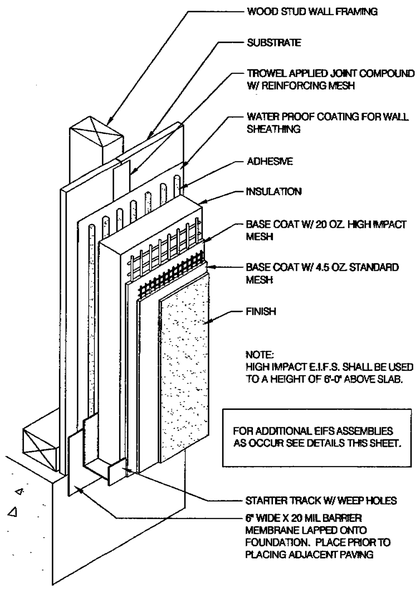

EIFS BASE TERMINATION N.T.S. | 16

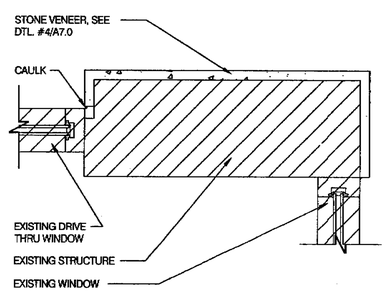

DRIVE THRU WINDOW JAMB 1 1/2" = 1'-0" | 11

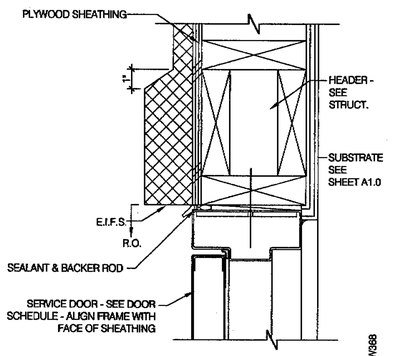

SERVICE DOOR HEAD/ JAMB 3"=1'-0" | 7

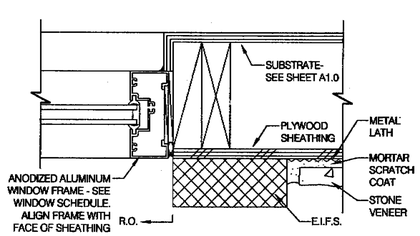

JAMB @ STONE VENEER 3" = 1'-0" | 3

CITY OF SAN JOSE
BUILDING DIVISION
B.P. #
DATE

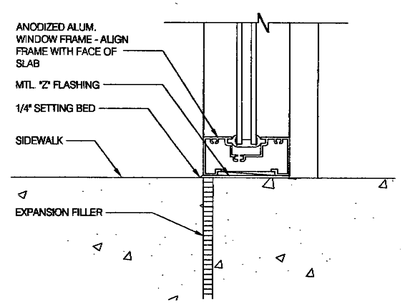

ALUMINUM WINDOW SILL 3" = 1'-0" | 12

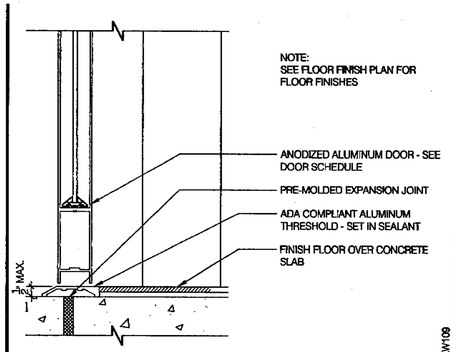

ALUMINUM DOOR THRESHOLD 3"=1'-0" | 8

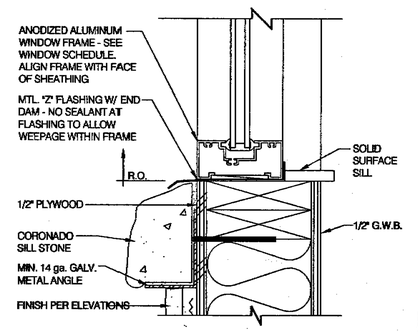

DINING ROOM WINDOW SILL 3" = 1'-0" | 4

THE FRAZIER GROUP
DESIGN & DEVELOPMENT SERVICES
5165 DREDGER WAY
ORANGEVALE, CALIFORNIA
95662 (916) 761-9331

REGISTERED PROFESSIONAL ENGINEER
JAMI A. HERLEY
No. 1694
EXP. 6/30/11
CIVIL
STATE OF CALIFORNIA
10-21-09

TACO BELL
170 BERNAL RD
SAN JOSE, CA

THIS DRAWING SHALL NOT BE CONSIDERED WHOLE OR ACCURATE UNTIL SIGNED BY THE ARCHITECT.

CONTACT DATE:	
BUILDING STYLE	
PLAN VERSION:	
SITE NUMBER	
TFG NUMBER	
WORK DATE:	
ISSUE DATE:	

TACO BELL

EXTERIOR CONSTRUCTION DETAILS

A7.1

FLOORS

SYM	DESCRIPTION	ALTERNATE
T-1	MFR.: DAL TILE TYPE: TERRA ANTIQUA CERAMIC TILE COLOR: ROSSO TA-02 SIZE: 18"x18" GROUT: CUSTOM #95 SABLE BROWN	
T-2	MFR.: DAL TILE TYPE: TERRA ANTIQUA CERAMIC TILE COLOR: ROSSO TA-02 SIZE: 6"x6" GROUT: CUSTOM #95 SABLE BROWN	

WALL BASE

SYM	DESCRIPTION	ALTERNATE
B-1	MFR.: DAL TILE TYPE: TERRA ANTIQUA CERAMIC TILE COLOR: ROSSO TA-02 SIZE: 6"x12" COVED BASE GROUT: CUSTOM #95 SABLE BROWN	
B-2	MATCH EXISTING B.O.H. COVE BASE TILE.	

1. WHERE NOTED INSTALL FRP PANELS ON WALLS FROM TOP OF TILE BASE TO BOTTOM OF CEILING GRID EXCEPT WHERE CERAMIC TILE IS INDICATED. INSTALL FRP ON KITCHEN SIDE OF SERVING COUNTER WALL.
2. NOT USED.
3. REFER TO INTERIOR ELEVATIONS FOR LOCATIONS OF TILE AND FRP.
4. FOR FINISH LOCATIONS REFER TO:
   SHEETS A4.0 & A4.1 - EXTERIOR ELEVATIONS
   SHEET A8.0 - FLOOR FINISH PLAN
   SHEET A9.0 - REFLECTED CEILING PLAN
   SHEETS A10.0 TO A10.1 - INTERIOR ELEVATIONS
5. ALL INTERIOR FINISHES SHALL HAVE CLASS 1 FIRE RATING.

ROOM FINISH NOTES 20

WALLS

SYM	DESCRIPTION	ALTERNATE
P-1	MFR.: SHERWIN WILLIAMS TYPE: SATIN / EGGSHELL LATEX COLOR: SW7069 IRON ORE (DK. GREY) PRIMER: #023 (WHITE) FRESH START 100% ACRYLIC (PAINT FOR CL-1)	
P-2	MFR.: SHERWIN WILLIAMS TYPE: SATIN / EGGSHELL LATEX COLOR: SW6657 "AMBER WAVE" PRIMER: #023 (WHITE) FRESH START 100% ACRYLIC (ORANGE)	P-2 MFR.: SHERWIN WILLIAMS TYPE: SEMI-GLOSS LATEX COLOR: SW6657 "AMBER WAVE" LOCATION: RESTROOMS
P-3	MFR.: SHERWIN WILLIAMS TYPE: SATIN / EGGSHELL LATEX COLOR: SW6510 "LOYAL BLUE" PRIMER: #023 (WHITE) FRESH START 100% ACRYLIC (BLUE)	
P-4	MFR.: SHERWIN WILLIAMS TYPE: SATIN / EGGSHELL LATEX COLOR: SW6431 "LEAP FROG" PRIMER: #023 (WHITE) FRESH START 100% ACRYLIC (GREEN)	
P-5	MFR.: SHERWIN WILLIAMS TYPE: SATIN / EGGSHELL LATEX COLOR: SW6839 "KIMONO" PRIMER: #023 (WHITE) FRESH START 100% ACRYLIC (PURPLE)	
P-6	MFR.: SHERWIN WILLIAMS TYPE: SATIN / EGGSHELL ENAMEL COLOR: SW6689 "YARROW" PRIMER: #023 (WHITE) FRESH START 100% ACRYLIC (YELLOW)	
S-1	MFR.: CORIAN TYPE: CLASSICS COLOR: PESTO MIST #309	
S-2	MFR.: CORIAN TYPE: SIGNATURES COLOR: COPPER ARTIFACTS #801	
TM-1	MFR.: MILLWORK TYPE: CHAIR RAIL COLOR: STAINED TO MATCH DALEYS #45 WOOD STAIN 1 x 2 SOLID MAPLE	
WT-1	MFR.: EUROWEST TYPE: CERAMIC TILE # 02750004 COLOR: CRYSTAL SERIES, SOLE (YELLOW) SIZE: 4"x4", ON 45° ANGLE GROUT: CUSTOM #22 SAHARA TAN	WT-1 MFR.: DAL TILE TYPE: SEMI GLOSS CERAMIC COLOR: GLOSS MUSTARD SIZE: 4.25" x 4.25", ON 45° ANGLE GROUT: CUSTOM #22 SAHARA TAN
WT-2	MFR.: DAL TILE TYPE: SONTERRA COLLECTION GLASS MOSAICS COLOR: OPALIZED GROUP 3, TERRA COTTA SR58 SIZE: 1"x1" GROUT: CUSTOM #95 SABLE BROWN	
WT-3	MFR.: DAL TILE TYPE: TERRA ANTIQUA CERAMIC TILE COLOR: ROSSO TA-02 SIZE: 12"x12" GROUT: CUSTOM #95 SABLE BROWN	
WT-4	MFR.: DAL TILE TYPE: TERRA ANTIQUA CERAMIC TILE COLOR: ROSSO TA-02 SIZE: 6"x12" COVED BASE GROUT: CUSTOM #95 SABLE BROWN	MFR.: TYPE: COLOR: NOTE: CUT IN HALF HORIZ. TO FORM TOP & BOTTOM TRIM, BULLNOSE EDGE @ TOP
WT-5	MFR.: DAL TILE TYPE: AMBER COLOR: QF07 SIZE: 6"x 6" GROUT: CUSTOM #22 SAHARA TAN	

DALTILE
LESLIE S. LIKINS
502-637-2750
LESLIE.LIKINS@DALTILE.COM

MARLITE
DAN EGBERS
330-343-6821
WWW.MARLITE.COM

WILSONART INTERNATIONAL, INC.
KEVIN GEUER
254-207-2071

SHERWIN WILLIAMS
BELINDA SIPOS
317-594-0083

FORBO
DONNA YOUNG-KERN
800-342-0604 EXT. 441
FAX: 1-614-734-1994
DYOUNG@FL-NA.COM

EUROWEST
2200 S. DUPONT DR.
ANAHEIM, CA 92806
714-937-7500

NATIONAL METAL SHAPES
RUSSEL DAY
800-837-9559

CONTACTS C

WALLS (LAMINATES)

SYM	DESCRIPTION	ALTERNATE / NOTE
WC-1	MFR.: TYPE: MARMOLEUM COLOR: 3825 AFRICAN DESERT (FRESCO)	ANODIZED CORNER GUARDS AND J MOLDS BY NATIONAL METAL SHAPES, DARK BRONZE
WC-2	MFR.: TYPE: MARMOLEUM COLOR: 3030 BLUE (REAL)	ANODIZED CORNER GUARDS AND J MOLDS BY NATIONAL METAL SHAPES, DARK BRONZE

CEILINGS

SYM	DESCRIPTION	ALTERNATE
CL-1	MFR.: ARMSTRONG TYPE: COLOR READY FINE FISSURED COLOR: TECH BLACK (24"x24") GRID: ARMSTRONG PRELUDE XL GRID COLOR: WHITE (SEE NOTE)- 15/16" EXPOSED TEE SYSTEM	NOTE: GRID, VENTS, SPEAKERS TO BE PAINTED IN FIELD: SHERWIN WILLIAMS SATIN/EGGSHELL #SW7069 IRON ORE (DK GREY)
CL-2	MFR.: USG TYPE: VINYL FACED, STIPPLE SHELL FIRECODE COLOR: WHITE GRID: USG INT. INC. BY DONN #272606-ZXA GRID COLOR: FLAT WHITE #050	
CL-3	MFR.: TYPE: GYPSUM BOARD COLOR:	

DOORS

SYM	DESCRIPTION	ALTERNATE
DL-1	MFR.: NEVAMAR TYPE: WM-8-350T COLOR: CARMEL SAGAWOOD	

CITY OF SAN JOSE
BUILDING DIVISION
B.P.#
DATE

METAL FRAMES

SYM	DESCRIPTION	ALTERNATE
MF-1	MFR.: TYPE: GLOSS FINISH COLOR: "DARK BRONZE" TO MATCH SHERWIN WILLIAMS ENAMEL BRONZE TONE CUSTOM COLORS: "SEAL BROWN"	

ROOM FINISH SCHEDULE LEGEND 4

THE FRAZIER GROUP
DESIGN & DEVELOPMENT SERVICES
5165 DREDGER WAY
ORANGEVALE, CALIFORNIA
95662 (916) 761-9331

REGISTERED PROFESSIONAL ENGINEER
WILLIAM A. TOMOSKOVSKY
NO. 16341
EXP. 6/30/11
CIVIL
STATE OF CALIFORNIA
10-21-09

TACO BELL
170 BERNAL RD
SAN JOSE, CA

THIS DRAWING SHALL NOT BE CONSIDERED WHOLE OR ACCURATE UNTIL SIGNED BY THE ARCHITECT.

CONTACT DATE:
BUILDING STYLE
PLAN VERSION:
SITE NUMBER
TFG NUMBER
WORK DATE:
ISSUE DATE:

TACO BELL

FINISH SCHEDULES

A8.1

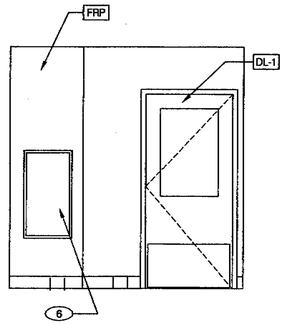

3

OFFICE 3/8" = 1'-0"

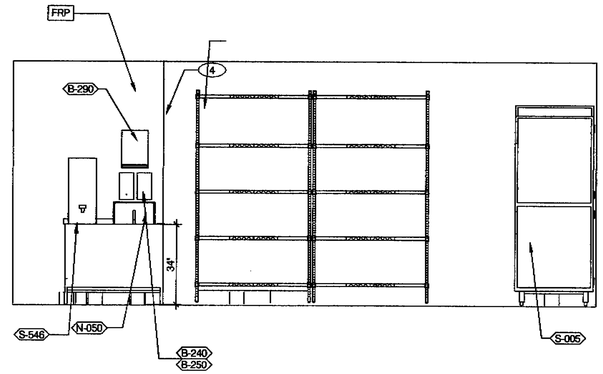

2

HAND SINK & TEA 3/8" = 1'-0"

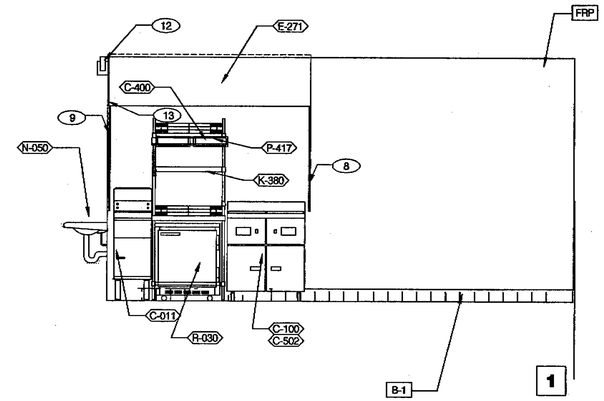

1

TB COOK 3/8" = 1'-0"

CITY OF SAN JOSE
BUILDING DIVISION
B.P.#
DATE

DRIVE-THRU 3/8" = 1'-0"

1. 6" STAINLESS STEEL CHASE FOR ICE MACHINE REFRIGERANT LINES.
2. ANSUL CABINET.
3. NOT USED
4. SS CORNER / END WALL CHANNEL GUARD, FULL HEIGHT.
5. HOLD-UP BUTTON.
6. SS CORNER GUARDS AT PERIMETER OF D/T WINDOW. SEE 14 & 15/A6.1 AND SCOPE OF WORK FOR RESPONSIBILITIES.
7. HAND SINK FOOT PEDAL.
8. EDGE OF SS PANEL BEHIND HOOD.
9. SS SPLASH GUARD. SEE DETAIL 9/A6.5.
10. FILTER FOR BUNN HOT WATER UNITS. COMES WITH #P-450.
11. PROVIDE CLEAR SILICONE CAULK WHERE ALL FIXED AND BUILT-IN COUNTERS / EQUIPMENT ABUT WALL SURFACES. WHERE GAP BETWEEN WALL AND COUNTER SPLASH / EQUIPMENT EXCEEDS 1/4", PROVIDE S.S. CLOSURE ANGLE.
12. GAS SHUT-OFF VALVE.
13. GAS RISER.
14. NOT USED.
15. 6" x 6" OPENING FINISHED WITH FRP FOR SYRUP TUBES. SEE 19/A6.4.
16. 4" DIA PVC SLEEVE FOR SYRUP TUBES. SEE 19/A6.4.

KEY NOTES | **A**

THE FRAZIER GROUP
DESIGN & DEVELOPMENT SERVICES
5165 DREDGER WAY
ORANGEVALE, CALIFORNIA
95662 (916) 761-9331

REGISTERED PROFESSIONAL ENGINEER
WILLIAM A. FRAZIER
NO. 16344
EXP. 6/30/11
CIVIL
STATE OF CALIFORNIA

TACO BELL
170 BERNAL RD
SAN JOSE, CA

THIS DRAWING SHALL NOT BE CONSIDERED WHOLE OR ACCURATE UNTIL SIGNED BY THE ARCHITECT.

CONTACT DATE:
BUILDING STYLE
PLAN VERSION:
SITE NUMBER
TFG NUMBER
WORK DATE:
ISSUE DATE:

TACO BELL

INTERIOR ELEVATIONS KITCHEN

A8.2

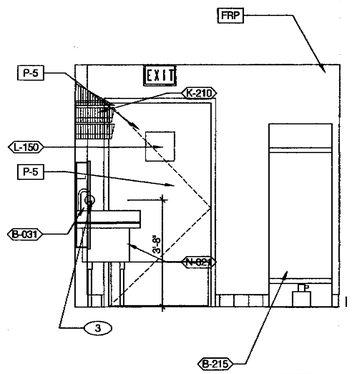

3

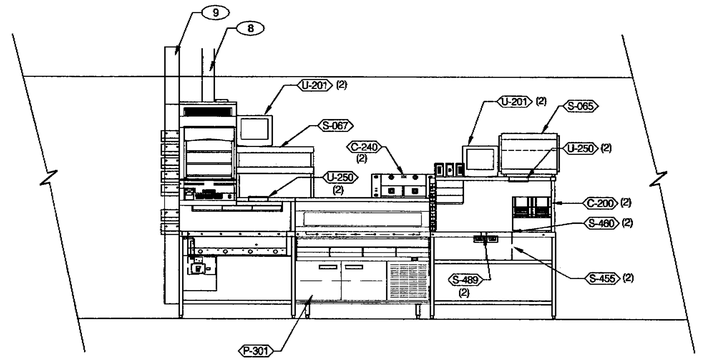

2

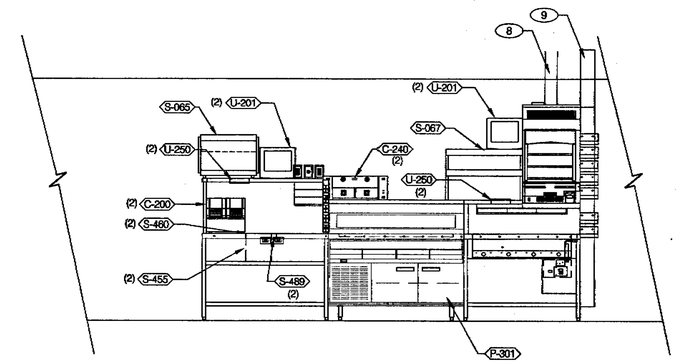

1

UTILITY 3/8" = 1'-0"

MINI-DUAL LINE 3/8"=1'-0"

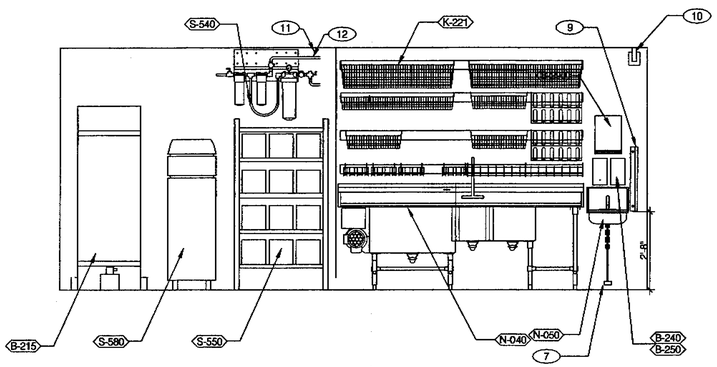

5

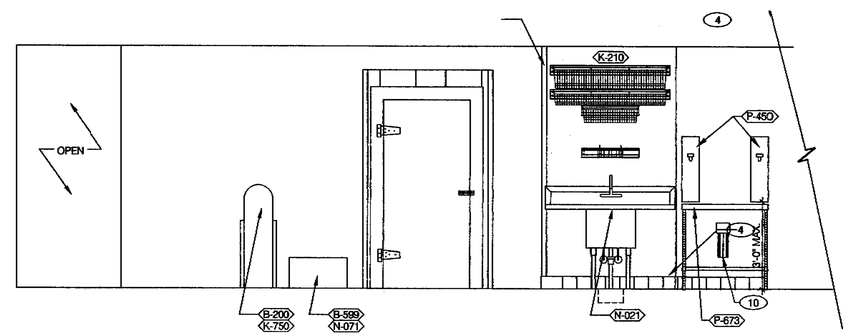

4

CITY OF SAN JOSE
BUILDING DIVISION
B.P.#
DATE

KITCHEN / UTILITY 3/8"=1'-0"

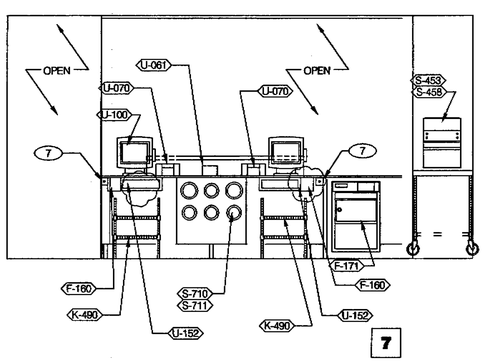

7

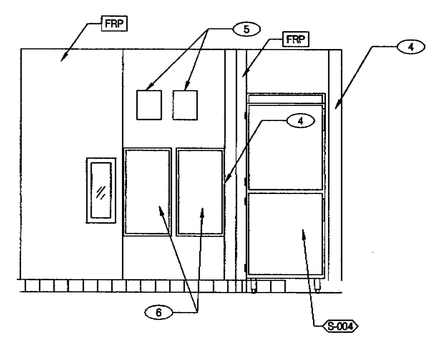

6

SERVING 3/8" = 1'-0"

UTILITY 3/8"=1'-0"

1. WATER HEATER INTAKE THROUGH SIDE WALL. SEE PLUMB DWGS.
2. LIGHTING CONTROL RELAYS (CONTACTORS).
3. ANSUL PULL STATION.
4. SS CORNER / END WALL CHANNEL GUARD, FULL HEIGHT. SEE 19/A6.5.
5. FAN MOTOR STARTERS, SURFACE MOUNTED. TYP. OF 2.
6. LIGHTING CONTROL "WATTSTOPPER" PANEL.
7. HOLD-UP BUTTON
8. PAIR 5" EXHAUST DUCTS FOR M.A.P.S. LINE STEAM HOOD. SEE MECHANICAL DRAWINGS.
9. UTILITY CHASE.
10. GAS SHUT-OFF VALVE.
11. 6" x 6" OPENING FINISHED WITH FRP FOR SYRUP TUBES. SEE 19/A6.4.
12. 4" DIA PVC SLEEVE FOR SYRUP TUBES. SEE 19/A6.4.

KEY NOTES A

THE FRAZIER GROUP
DESIGN & DEVELOPMENT SERVICES
5165 DREDGER WAY
ORANGEVALE, CALIFORNIA
95662 (916) 761-9331

REGISTERED PROFESSIONAL ENGINEER
NO. 16341
EXP. 6/30/11
CIVIL
STATE OF CALIFORNIA
10-21-09

TACO BELL
170 BERNAL RD
SAN JOSE, CA

THIS DRAWING SHALL NOT BE CONSIDERED WHOLE OR ACCURATE UNTIL SIGNED BY THE ARCHITECT.

CONTACT DATE:
BUILDING STYLE
PLAN VERSION:
SITE NUMBER
TFG NUMBER
WORK DATE:
ISSUE DATE:

TACO BELL

INTERIOR ELEVATIONS KITCHEN

A8.3

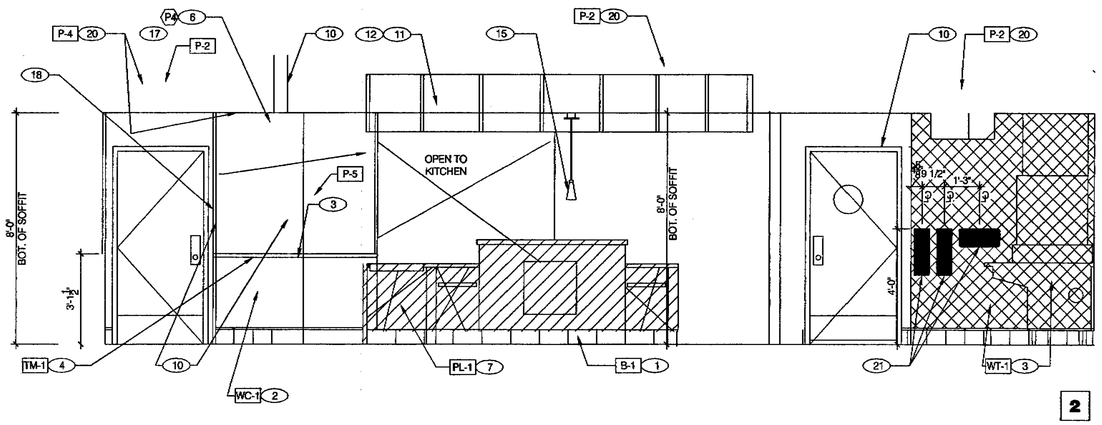

2

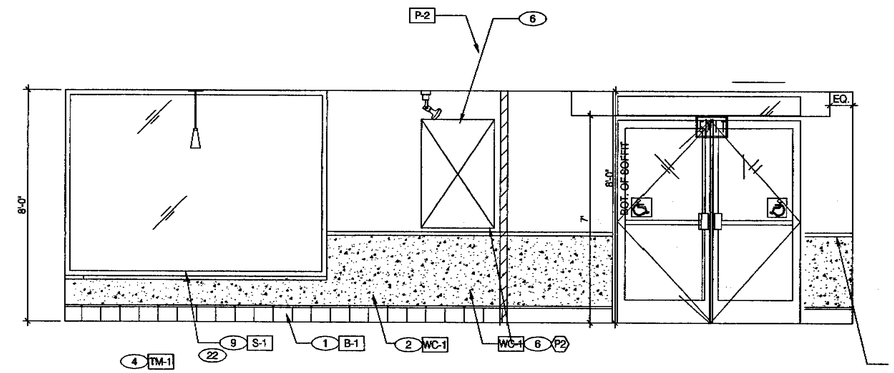

1

DINING 3/8" = 1'-0"

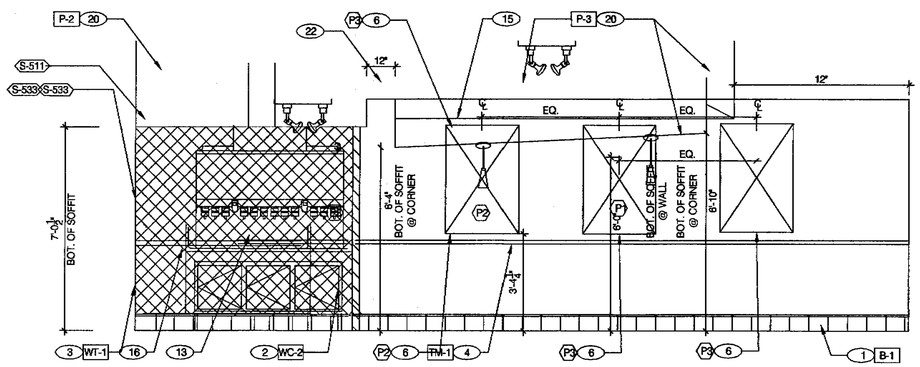

3

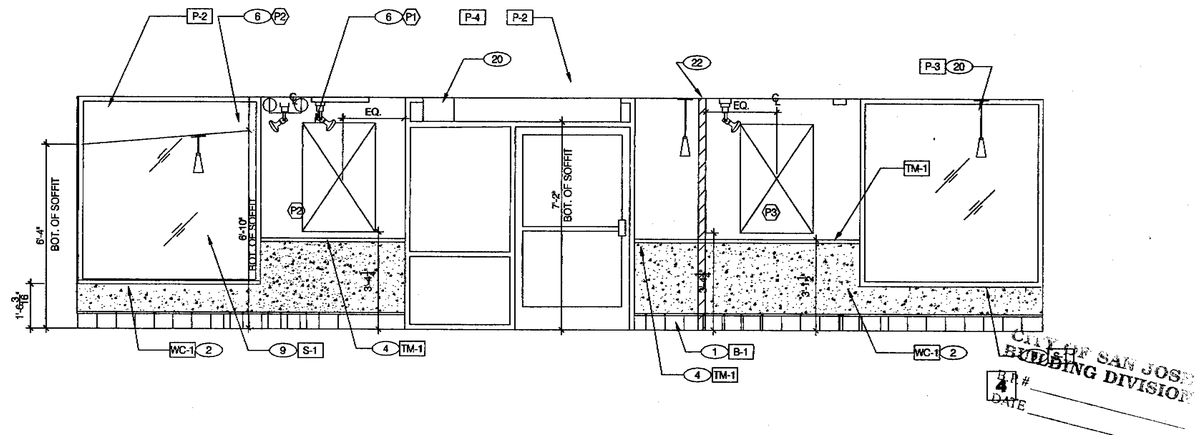

4

DINING 3/8" = 1'-0"

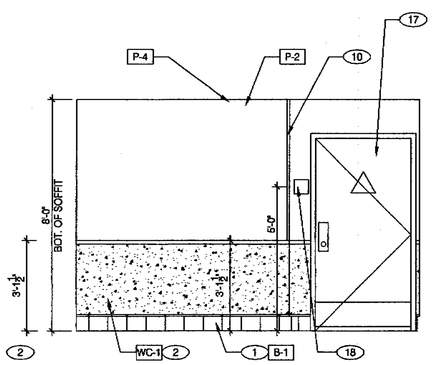

5

DINING 3/8" = 1'-0"

1. ⬭ DENOTES KITCHEN EQUIPMENT ITEM. REFER TO SHEET A2.0
2. REFER TO "FLOOR PLAN NOTES," SHEET A1.0, FOR SUBSTRATE NOTES.
3. ▭ DENOTES FINISH MATERIAL. REFER TO SHEET A8.1 FOR FINISH SCHEDULE.
4. NOT USED
5. SEE DETAIL A/A10.1 FOR ENLARGED TOILET ROOM PLAN W/ DIMENSIONS.
6. ◇ DENOTES TOILET ROOM ACCESSORIES. SEE SHEET A10.1
7. ⬡ DENOTES ARTWORK. SEE SHEET A2.1

■ HATCHED OBJECTS INDICATE VENDOR DECOR ITEMS. SEE SCOPE OF WORK.

HATCHED OBJECTS INDICATE VENDOR DECOR ITEMS. SEE SCOPE OF WORK.

1. COVE TILE. SEE DETAIL 16/A11.0 AND SHEET A8.0.
2. WAINSCOT, TYPICAL. SEE 15 & 16/A11.0.
3. CERAMIC TILE. PROVIDE 5/8" CEMENTITIOUS BOARD SUBSTRATE BEHIND NEW TILES, TYP. SEE DETAIL D/A10.1.
4. CHAIR RAIL. SEE DETAIL 15/A11.0.
5. (POP LADDER) SEATING/DECOR ITEM. REFER TO SCOPE OF WORK
6. SEE ARTWORK SCHEDULE SHEET A2.1 FOR DESCRIPTION AND PLAN LOCATION.
7. SERVING COUNTER. REFER TO SHEET A2.1.
8. RADIUS DIVIDER WALL. REFER TO SCOPE OF WORK.
9. SOLID SURFACE WINDOW SILL. SEE DETAIL 4/A7.1.
10. 1/2" X 1/2" STAINLESS STEEL CORNER GUARD.
11. MENU BOARD.
12. MARMOLEUM COVE SUPPLIED BY SEATING VENDOR.
13. STAINLESS STEEL SPLASH GUARD.
14. NOT USED
15. PENDANT LIGHT. SEE REFLECTED CEILING PLAN AND ELECTRICAL DRAWINGS.
16. DRINK STATION.
17. NEW DOOR. SEE DOOR SCHEDULE.
18. BRAILLE SIGN.
19. NOT USED
20. GYP. BD. SOFFIT. SEE REFLECTED CEILING PLAN.
21. RECESSED STRAW AND LID HOLDERS. FRAME INTO WALL AS REQUIRED. SEE SHEET A2.0.
22. DINING ROOM SCREEN BY DECOR VENDOR.

KEY NOTES A

THE FRAZIER GROUP
DESIGN & DEVELOPMENT SERVICES
5165 DREDGER WAY
ORANGEVALE, CALIFORNIA
95662 (916) 988-8364

REGISTERED PROFESSIONAL ENGINEER WILLIAM A. WUNDERS LIC. NO. 16341 EXP. 6/30/11 CIVIL STATE OF CALIFORNIA 12-21-09

TACO BELL
170 BERNAL RD
SAN JOSE, CA.

CITY OF SAN JOSE BUILDING DIVISION
BR #
DATE

THIS DRAWING SHALL NOT BE CONSIDERED WHOLE OR ACCURATE UNTIL SIGNED BY THE ARCHITECT.

CONTRACT DATE: XXXXX	
BUILDING STYLE	ML2 REMODEL
PLAN VERSION:	
SITE NUMBER	
TFG NUMBER	56307
WORK DATE:	
ISSUE DATE:	

TACO BELL

INTERIOR ELEVATIONS DINING ROOM

A10.0

NOT USED N.T.S. | 18

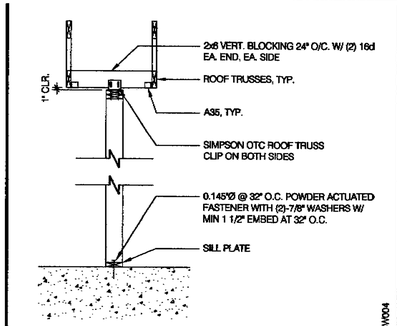

SUPPORT- PARALLEL TO TRUSS 1/2" = 1'-0" | 13

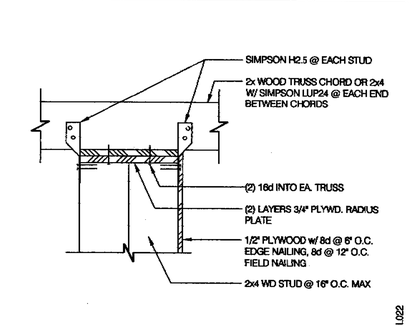

CONNECTION DETAIL 1 1/2" = 1'-0" | 9

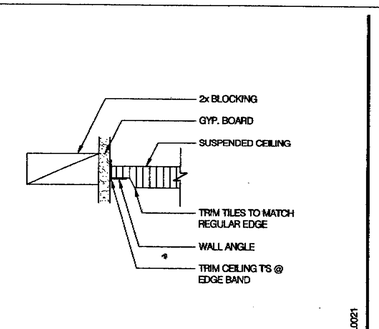

WALL ANGLE 3" = 1'-0" | 5

NOT USED | 1

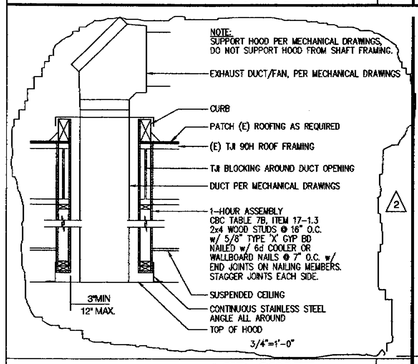

1 HR. SHAFT N.T.S. | 19

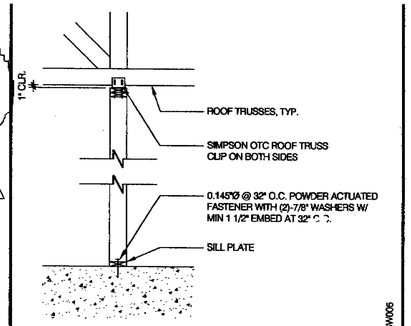

SUPPORT PERP. TO TRUSS 1/2" = 1'-0" | 14

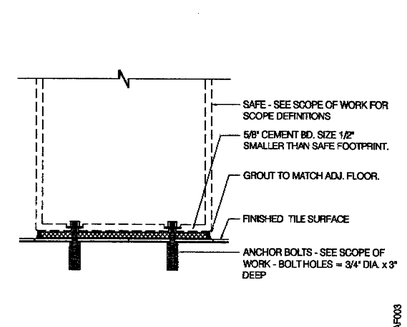

SAFE PEDESTAL 1" = 1'-0" | 10

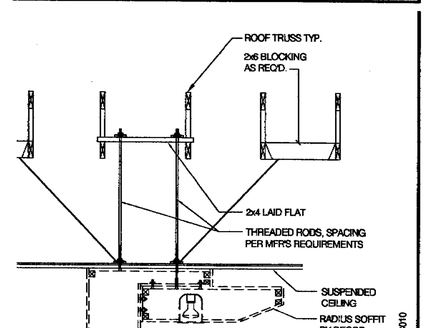

RADIUS SOFFIT SUPPORT 1/2"=1'-0" | 6

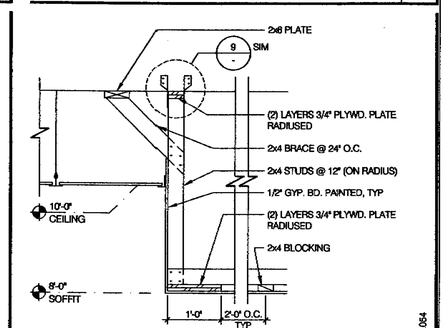

DINING ROOM SOFFIT 3/4" = 1'-0" | 2

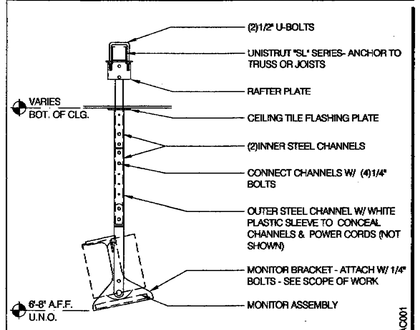

MONITOR CEILING BRACKET N.T.S. | 19

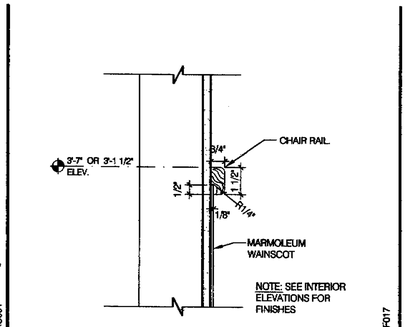

CHAIR RAIL 3" = 1'-0" | 15

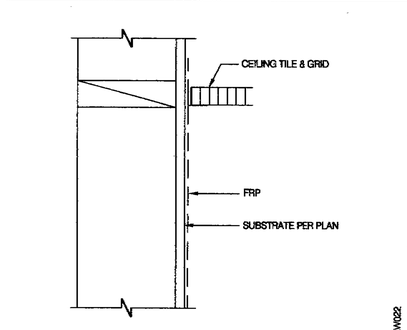

FRP @ CEILING 3" = 1'-0" | 11

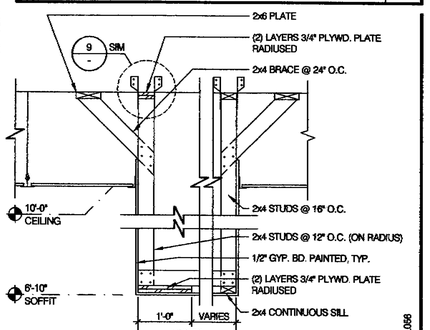

SERVICE COUNTER SOFFIT 3/4"=1'-0" | 7

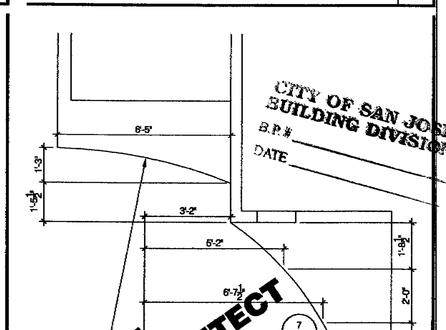

SOFFIT PLAN 3/8" = 1'-0" | 4

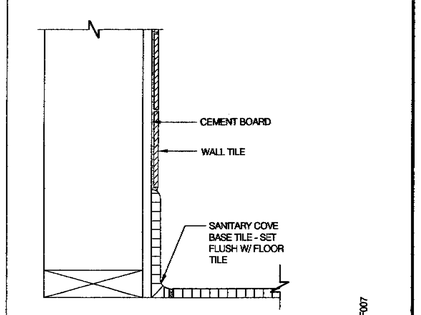

BASE IN RESTROOM 3"=1'-0" | 20

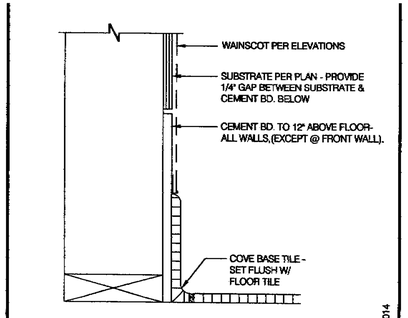

BASE @ DINING ROOM 3" = 1'-0" | 16

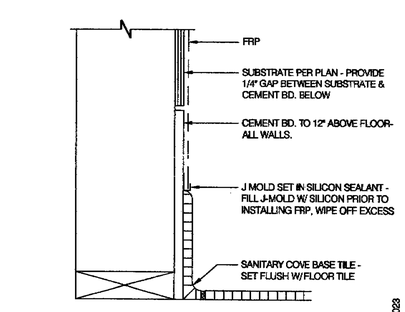

FRP @ BASE 3" = 1'-0" | 12

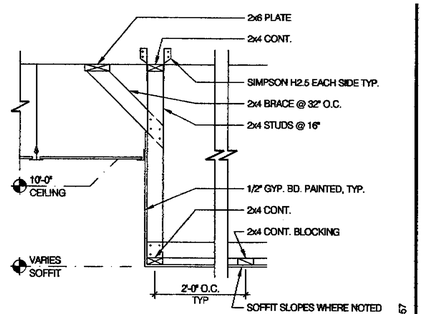

TYPICAL SOFFIT 3/4" = 1'-0" | 8

THE FRAZIER GROUP
DESIGN & DEVELOPMENT SERVICES
5165 DREDGER WAY
ORANGEVALE, CALIFORNIA
95662 (916) 761-9331

REGISTERED PROFESSIONAL ENGINEER WILLIAM A. NORDAN No. 16841 EXP. 6/30/11 CIVIL STATE OF CALIFORNIA
10-21-09

2 BLDG. 8-21-09

TACO BELL
170 BERNAL RD
SAN JOSE, CA

THIS DRAWING SHALL NOT BE CONSIDERED WHOLE OR ACCURATE UNTIL SIGNED BY THE ARCHITECT.

CONTACT DATE:	
BUILDING STYLE	
PLAN VERSION:	
SITE NUMBER	
TFG NUMBER	
WORK DATE:	
ISSUE DATE:	

TACO BELL

INTERIOR CONSTRUCTION DETAILS

A11.0