26963

26963

S C

Street Number

1 4 6 2

Street Dir

S

Document Date

3 / 1 1 / 8 1

Street Name

W I N C H E S T E R

Street Type

B L

Tract Number

Sub Doc Type

B L

Doc Type

P L

Box Number

	Prepped By	Scanned By	Indexed By	Verified By
Initials				
Date				

GRAGE & ASSOCIATES
ARCHITECTS • ENGINEERS • PLANNERS
2062 BUSINESS CENTER DRIVE, IRVINE, CALIFORNIA 92715
(714) 752-7888 • (213) 633-7101
R.E. GRAGE, AIA, CE

STRUCTURAL CALCULATIONS
PREPARED FOR

26963 1118

TACO BELL # 351
1462 S. WINCHESTER BOULEVARD
SAN JOSE, CALIF.
919-18

TACO BELL
17381 RED HILL AVENUE
IRVINE, CA 92714

REGISTERED PROFESSIONAL ENGINEER
RAYMOND E. GRAGE
NO. 19137
CIVIL
STATE OF CALIFORNIA

GRAGE & ASSOCIATES
Architects·Engineers·Planners

R.E. GRAGE Architect A.I.A. Engineer C.E.
2062 Business Center Drive, Irvine, California

(714) 752-7888 (213)633-7101

BY M.K. DATE 8/79 SHEET NO. 1 OF
CHKD. BY DATE JOB NO. 919-18
CLIENT TACO BELL

SUBJECT DINING RM ADDITION
- 1528 - SAN JOSE

DESIGN CRITERIA

COMPO RP

ROOF COMPO	5.5 PSF	TILE	10.0 PSF
SHEATH'G	1.8	SHEATH'G	1.8
CL'G	2.0	FRAM'G	3.0
FRAM'G	3.0	CEIL'G	2.0
MISC (M+E)	1.7	MISC (M+E)	2.2
	14.0 PSF		19.0 PSF

LIVE LOAD = 20 P.S.F. (REDUCEABLE PER U.B.C.)

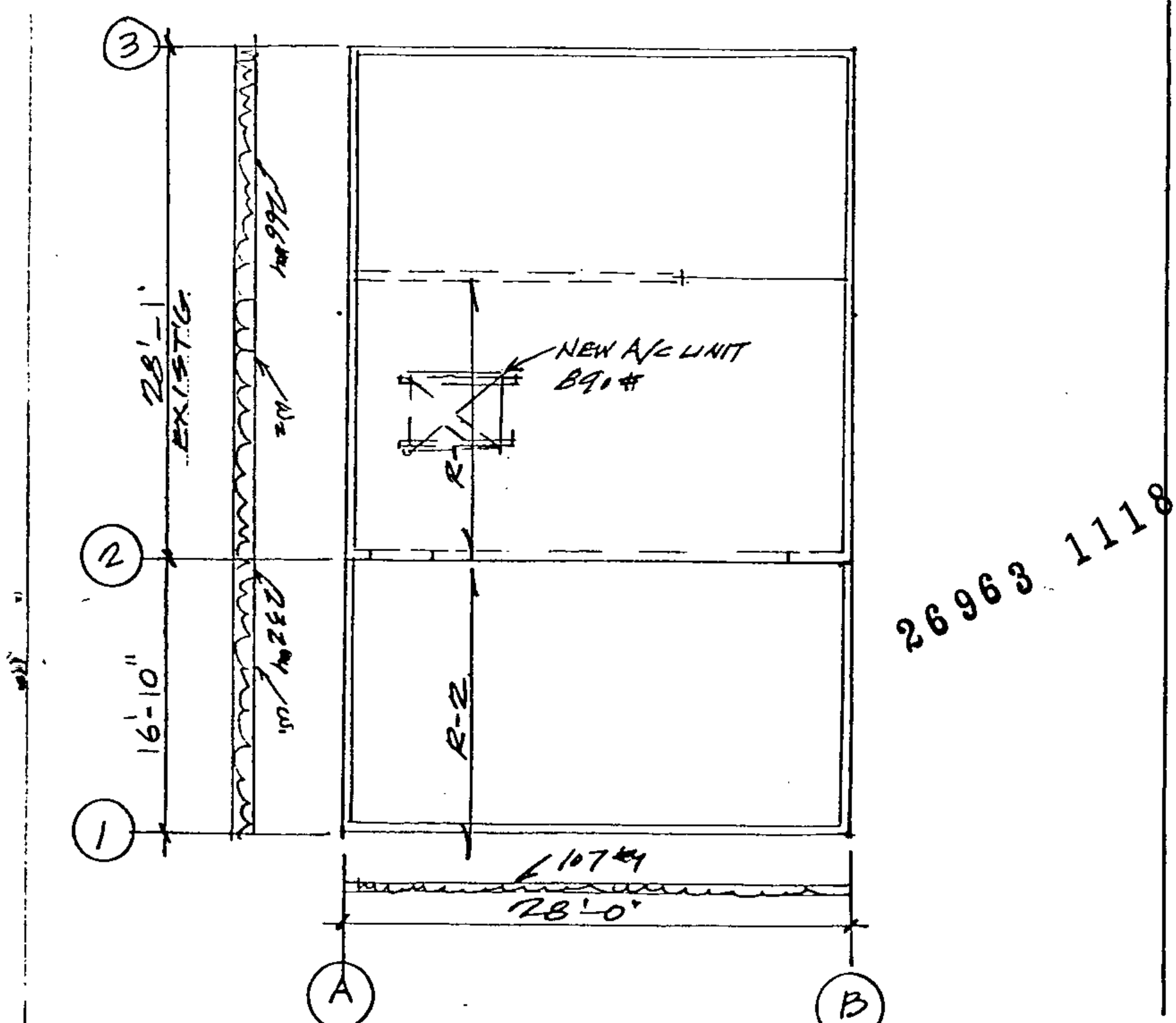

26963 1118

GRAGE & ASSOCIATES
Architects·Engineers·Planners

R.E. GRAGE Architect A.I.A. Engineer C.E.
2062 Business Center Drive, Irvine, California

(714) 752-7888 (213)633-7101

BY M.K DATE _____ SHEET NO. 2 OF ____
CHKD. BY ____ DATE _____ JOB NO. 919-18
CLIENT TACO BELL

SUBJECT DINING RM ADDITION
- 1527 - SAN JOSE

ROOF FRAMING

(R-1) CHECK NEW A/C UNIT ON EXIST. JOIST.

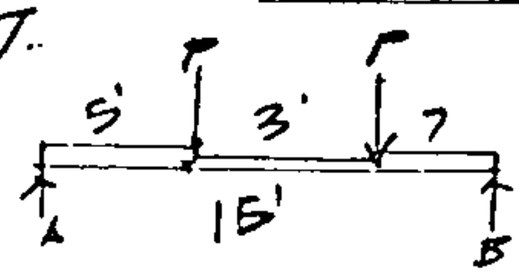

A/C UNIT = 988#
AREA OF PLATFORM = 6.5×3' = 19.5 ft²
LOAD = 988#/19.5 = 50.25 #/ft² - 20 = 30.25 psf
$P_{AC\,DL}$ = 30.25 psf × 19.5 = 589 #
P_1 = 586 × 1.33/2 × 6.5' = 60#
W_{TL} = (14# + 20#) × 1.33 = 45.2 #/ft V_5 = 226# V_7 = 316#
W_{DL} = 14# × 1.33 = 18.62 #/ft V = 56#
V_A = 316# × 3.5 + 60# × (7 + 10) + 56# × 8.5' + 226# × (12.5)/15 = 362#
V_B = 352#
M = (352# + 36) × 7 × 12/2 = 16.29 "k
S = 16.29 "k/1.45 × 1.25 = 8.99 in³

USE:
EXIST'G
2×10 @ 16" OC
OK.

(R-2) NEW TILE ROOF L = 16'-10"
W_{TL} = (19# + 20#) × 2' = 78 #/ft
M = 78#/ft × 16.83'² × 1.5 = 33.14 "k
S = 33.14 "k/1.45 × 1.25 = 18.28 in³
V = 656#
A_R = 1.5 × 78 × 7.58/95 × 1.25 = 7.47 in²
FOR: Δ (LL + 0.5ΔL) = L/240
I_R = .264 × .069 × 16.83³ = 74.25 in⁴

USE = (#2 GR)
2×10 @ 24" OC
(MIN.)

CHECK LEDGER SPACING
V = 656# × 1.33 = 872#

USE = 4×
LEDGER W/
3/4" ϕ THRU B/S
@ 16" OC

26963 1118

GRAGE & ASSOCIATES
Architects·Engineers·Planners

R.E. GRAGE Architect A.I.A. Engineer C.E.
2062 Business Center Drive, Irvine, California

(714) 752-7888 (213)633-7101

BY M.K. DATE _____ SHEET NO. 3 OF _____
CHKD. BY _____ DATE _____ JOB NO. 919-18
CLIENT TACO. BELL

SUBJECT DINING RM ADDITION
-1528- SAN JOSE

WALL DESIGN

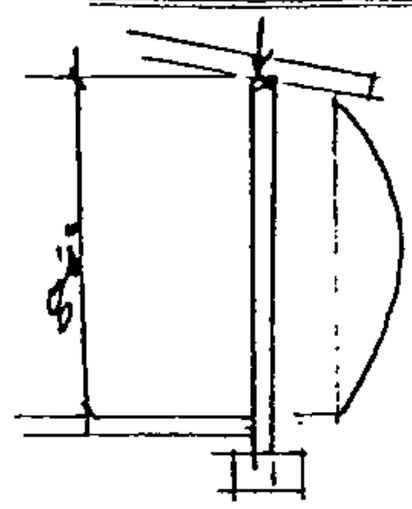

$h = 8'-0"$

$h/t = 8 \times 12/8 = 12 < 25$

MIN. $A_s = .002 \times 8 \times 12 = .02$ in²

WIND = 15 PSF

SEISMIC = $F_p = 0.3\ W_p$

$F_p = 0.3 \times 65 = 19.5$ PSF

$M = 19.5 \times 8^2/8 = 156$ #'

$\rho = 40 \times .31/32 \times 7.6 = .051$ $\quad 2/kj = 8.08$

$f_b = 156' \times 8.08/3.9^2 = 83$ psi

DL

ROOF = 19# × 9' = 171#

½ WALL = 65# × 4' = 260

431#

$F_a = 146$ psi

$f_a = 431\#/12 \times 7.6 = 4.73$

INTERACTION: $\frac{4.73}{146} + \frac{83}{249} = 0.37 < 1.33$ ok

USE: 8" CONC BLK WALL W/ #5 @ 32" OC VERT. & #4 @ 48" OC HORIZ AND 4-#4 @ BOND BEAM

FOUNDATION

$P_{SOIL\ BEARING} = 1000$ PSF (ASSUMED)

NEW FTG

$W_{TL} = \overset{RF}{34\# \times 9'} + \overset{WALL}{65\# \times 8'} + \overset{FTG}{150\#} = 976$ #'

USE:
1'-0" WIDE × 1'-0" THK W/ 1-#4 T&B

CHECK EXIST'G FTG.

$W_{TL} = \overset{RF}{34\# \times 7.83'} + \overset{RF}{34\# \times 7.5'} + \overset{WALL}{65\# \times 14'} + 337\# = 1543$ #'

USE:
EXIST'G
1'-6" WIDE × 1'-6" THK
FTG W/ 2-#7 T&B
W/ #3 TIES @ 18" OC
OK.

26963 1118

GRAGE & ASSOCIATES
Architects·Engineers·Planners

R.E. GRAGE Architect A.I.A. Engineer C.E.
2062 Business Center Drive, Irvine, California

(714) 752-7888 (213)633-7101

BY M.K DATE _____ SHEET NO. 4 OF _____
CHKD. BY _____ DATE _____ JOB NO. 919-18
CLIENT TACO BELL

SUBJECT DINING RM ADDITION
- 1528 - SAN JOSE

LATERAL ANALYSIS

$V = CKZIsW$
$Cs = 0.14$
$K = 1.33$
$Z = 1.0$ $\therefore V = 0.186\ W_2$
$I = 1.0$
$W = DL$

$W_1 = (19^{\#} \times 28' + 2 \times 65 \times 5') \times .186 = 232^{\#}$ NEW
$W_2 = (14^{\#} \times 28' + 2 \times 65 \times 8') \times .186 = 266^{\#}$ EXISTG
$W_3 = (19^{\#} \times 16.5' + 65^{\#} \times 4') \times .186 = 107^{\#}$

$V_D = 232^{\#} \times 15/2 = 1.74^k$ 1.49
$V_{@} = 1.74^k + 266^{\#} \times 14' = 5.46^k$ 5.16
$V_3 = 3.72^k$
$V_A = V_B = 1.49^k$

L2 3'-4"x2 + 2'-8"x2 = 12'

(SW-1)
$V = 1.74^k \times 1.5 / 7.5 \times 12' \times 12 = 0.2$ psi

(SW-2)
$V = 5.46^k$
$O.T.M = 5.46^k \times 9' = 49.14^k$
$A_{s1} = 49.14^k / 1.44 \times 1.33 \times 336 = 1.08$ in²

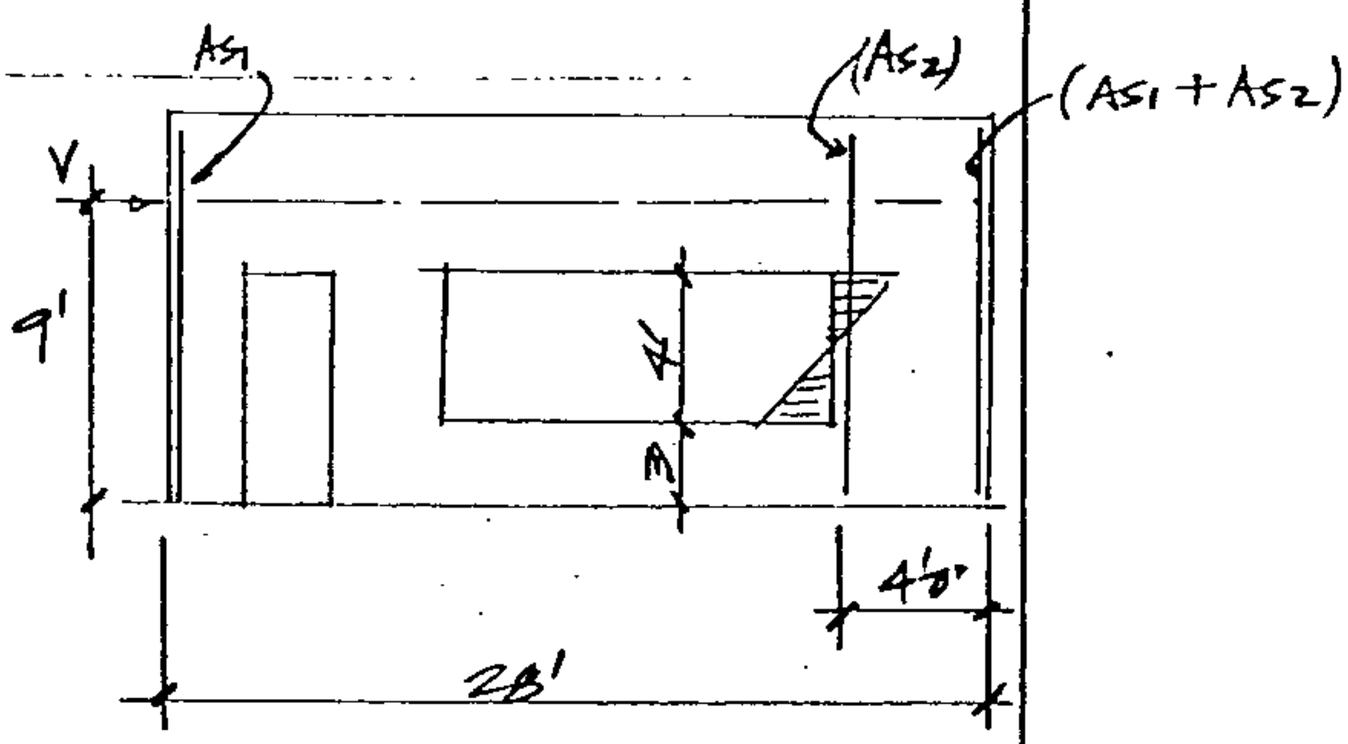

DL.
ROOF $19^{\#} \times 7.5' \times 28' = 3990^{\#}$
DIST ROOF $14^{\#} \times 7.83' \times 28' = 3069^{\#}$
WALL $(116 \times 28 - 4 \times 16 - 3 \times 7) \times 65 = 20865$
SIDW. $6 \times 24 \times .15 \times 65 = 4680$
$32664^{\#}$

$M_R = 32604^{\#} \times 28/2 = 456.45^{'k}$ > O.T.M.

$P_{MAX} = \frac{49.14^k}{24} + \frac{32604}{2} = 18.35^k$

26963 1118

GRAGE & ASSOCIATES
Architects·Engineers·Planners

R.E. GRAGE Architect A.I.A. Engineer C.E.
2062 Business Center Drive, Irvine, California

(714) 752-7888 (213)633-7101

BY M.K DATE _____ SHEET NO. 5 OF _____
CHKD. BY _____ DATE _____ JOB NO. 919-18
CLIENT TACO BELL

SUBJECT DINING RM ADDITION
-1528- SAN JOSE

LATERAL (CONT.)

CONSIDER 4'-0" PIER ① - TAKE ALL SHEARS

$M_f = 5.46^k \times 4/2 = 10.92^{'k}$ $d = 44"$

$A_{s2} = 10.92^{'k}/1.44 \times 44 \times 1.33 = 0.13^{\#/''}$

$A_{s1} + A_{s2} = 0.13^{\#/''} + .08 = .21^{\#/''}$

USE: EXIST'G 2-#6 @ EA. END OF PIER

$n_p = 0.88 \times 40/48 \times 4.6 = 0.16$ $z/kj = 5.46$

$f_b = 10920 \times 5.41 \times 12/4.6 \times 44^2 = 80.34^{PSI}$

$F_b = 0.166 \times 1500 = 249$ psi

$f_a = 18.35^k/48 \times 4.6 = 83$ psi

$F_a = 0.2 \times 1500/2 [1 - (\frac{4 \times 12}{70 \times 8})^2] = 149$ psi $> f_a$ ok

$\therefore \frac{f_a}{F_a} + \frac{f_b}{F_b} = \frac{83}{149} + \frac{80.34}{249} = .88 < 1.33$ ok

SHEAR: $V = 5.46^k \times 1.5/46 \times 4.6 \times 1.33 = 29$ psi < 34 psi ok

SHEAR REINF'G: TRY #3 @ 16" o.c.

$A_s = \frac{V \times b \times s}{f_v} = \frac{29 \times 4.6 \times 16}{20000} = 0.17^{\#/''}$

EXIST'G #3 @ 16" o.c. HORIZ ok

FOOTING

O.T.M = $49.14^k + 5.46^k \times 1.5 = 57.33^{'k}$

$\Sigma DL = 32.64^k$

$e = 57.33^{'k}/32.61^k = 1.76'$

$a = \frac{28}{2} - 1.76' = 12.24'$

$S.P. = \frac{32664}{(1.5 \times 28)^2 (1.33)} [4 \times 28 - 6 \times 12.24] = 803$ PSF

EXIST'G. 18" x 18" CONT. FTG W/ 2-#7 T&B #3 TIES @ 18" o.c. ok

ROOF ANCHORAGE:

$F_p = (13' \times 65) \times 43 = 254^{\#}$

TIE @ 32" o.c. = $254^{\#} \times 32/12 = 677^{\#}$ (5/8" M.BL)

26963 1118

USE: 3" x 3/16" BENT PL W/ 1-5/8" ϕ H. & 1-5/8" THRU BL @ 32" o.c.

A/L-6

GRAGE & ASSOCIATES
Architects·Engineers·Planners

R.E. GRAGE Architect A.I.A. Engineer C.E.
2062 Business Center Drive, Irvine, California

(714) 752-7888 (213)633-7101

BY MK DATE _____ SHEET NO. 6 OF _____
CHKD. BY _____ DATE _____ JOB NO. 919-18
CLIENT TACO BELL

SUBJECT DINING RM ADDITION
-1528 - SAN JOSE

LATERAL CONT

(SW-3)
V = 3.72k
WALL v = 1.5 × 3.72k / 19 × 12 × 7.5 = 3 psi — ok

(SW-A) (SW-B)
V = 1.49k
RF V = 1.49k / 15' = 99#/'
USE: 3/4" PLYWD W/ 10d @ 6, 6, 12" TYP.

CHORD = 107#/' × 28²/8 × 15 = 699#
USE: 4-#4 CHORD BAR OR TYP.

WALL v = 1.5 × 1.49k / 6.33 × 7.5 × 12 = 4 psi — ok

CHECK ROOF ANCHORAGE @ A/A-4
Roof v = 200#/' gravity
65#/' × 5.5' × 0.3 = 107#/'
17#/' × 4' = 76#
783#/'
USE: SIMPSON HL3 @ 48" o.c W/ 1-5/8"φ M.B. & 1-5/8"φ A.B.

TIE @ 48" o.c = 200#/' × 4' = 800#
5/8"φ A.B. = 750# × 1.33 = 997#

26963 1118

ROOF ANCHORAGE (8/A-4)
TIES @ 48" o.c = 800#
SIMPSON A35 EA SIDE = 470# × 2 × 1.33 = 1250# ok

CHECK CORBEL CONN.
P = (19# + 20#) × 4' × 1.5 = 234#
FC = 234# × 9'/6" = 351#

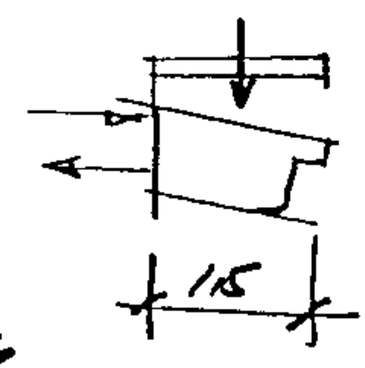

USE 2-1/2"φ × 6" LG. LAG BOLT