City of San Jose - Building Division - Index Cover

Address 840 S Bascom Av

PLAN CHECK # 11025250 **PERMIT # (B E P M)**

Prepared By: LB **Page #** **Date** 8/4/11

Category	Document Type	Sub Document Type
☐ MP Tracts	☐ PP Plot Plans	
	☐ TP Tract Plans	☐ BD Building ☐ PB Plumbing ☐ MM Mechanical ☐ EE Electrical
	☐ TD Supporting Documents	
	☐ TC Structural Calculations	
	☐ TN Energy Calculations	
	☐ TS Soils Report	
	☐ TT Trusses/Shop Drawings	
	☐ TM Tract Map	☐ AR Addressed
☒ PL Plans	☐ PY Preliminary Plans	
	☒ EP Plans	☒ BL Building ☐ BP Plumbing ☐ BM Mechanical ☐ BE Electrical
	☐ PM Parcel Map	
	☐ AM Alternate Materials	
	☐ SC Structural Calculations	
	☐ EC Energy Calculations	
	☐ SD Supporting Documents	
	☐ SR Soils Report	
	☐ TR Trusses/Shop Drawing	
	☐ CR Copy Request	
☐ PT Permits	☐ AD Addressing	
	☐ IN Inspection Notices	☐ EP Expired
	☐ PR Permits & Applications	☐ CC Cash Receipts / Refunds ☐ CO C of O ☐ CP Correspondence ☐ EX Expired / Voided ☐ FI Finals ☐ IN Initial ☐ IS Initial – Supporting Doc's ☐ MR Meter Releases ☐ SI Special Inspection Reports
	☐ CF Compliance Files	☐ CN Compliance Notices ☐ RS Rescind ☐ SW Stop Work Orders
	☐ DR Damage Reports	☐ ED Earthquake Damage ☐ FD Flood Damage ☐ FA Fire/Auto Survey ☐ IV Investigation Survey

TACO BELL SIGNAGE

STRUCTURAL NOTES

1. THE CONTRACTOR IS RESPONSIBLE FOR VERIFICATION AND CORRELATION OF ALL ITEMS AND WORK NECESSARY FOR COMPLETION OF THE PROJECT AS INDICATED BY THE CONTRACT DOCUMENTS. SHOULD ANY QUESTION ARISE REGARDING THE CONTRACT DOCUMENTS OR SITE CONDITIONS, THE CONTRACTOR SHALL REQUEST INTERPRETATION AND CLARIFICATION FROM THE ENGINEER BEFORE BEGINNING THE PROJECT. THE ABSENCE OF SUCH REQUEST SHALL SIGNIFY THAT THE CONTRACTOR HAS REVIEWED AND FAMILIARIZED HIMSELF WITH ALL ASPECTS OF THE PROJECT AND HAS COMPLETE COMPREHENSION THEREOF. ALL PHASES OF THE WORK SHALL CONFORM TO THE 2010 CALIFORNIA BUILDING CODE, INCLUDING ALL REFERENCE STANDARDS, UNLESS NOTED OTHERWISE. THE CONTRACTOR SHALL BE RESPONSIBLE FOR CONFORMANCE TO ALL SAFETY REGULATIONS DURING CONSTRUCTION.

2. THE CONTRACT DRAWINGS AND SPECIFICATIONS REPRESENT THE FINISHED STRUCTURE. UNLESS OTHERWISE SPECIFICALLY NOTED, THEY DO NOT INDICATE THE METHOD OF CONSTRUCTION OR CONSTRUCTION LOADS. ONLY THE CONTRACTOR SHALL PROVIDE ALL METHODS, DIRECTION AND RELATED EQUIPMENT NECESSARY TO PROTECT THE STRUCTURE, WORKMEN AND OTHER PERSONS AND PROPERTY DURING CONSTRUCTION. THE CONTRACTOR SHALL, AT HIS OWN EXPENSE, ENGAGE PROPERLY QUALIFIED PERSONS TO DETERMINE WHERE AND HOW TEMPORARY PRECAUTIONARY MEASURES SHALL BE USED AND INSPECT SAME IN THE FIELD. ANY MATERIAL NOT AS SPECIFIED OR IMPROPER MATERIAL INSTALLATION OR WORKMANSHIP SHALL BE REMOVED AND REPLACED WITH SPECIFIED MATERIAL IN A WORKMANLIKE MANNER AT THE CONTRACTOR'S EXPENSE.

3. THESE PLANS, SPECIFICATIONS, ENGINEERING AND DESIGN WORK ARE INTENDED SOLELY FOR THE PROJECT SPECIFIED HEREIN. MILLER CONSULTING ENGINEERS DISCLAIMS ALL LIABILITY IF THESE PLANS AND SPECIFICATIONS OR THE DESIGN, ADVICE AND INSTRUCTIONS ATTENDANT THERETO ARE USED ON ANY PROJECT OR AT ANY LOCATION OTHER THAN THE PROJECT AND LOCATION SPECIFIED HEREIN. OBSERVATION VISITS TO THE JOB SITE AND SPECIAL INSPECTIONS ARE NOT PART OF THE STRUCTURAL ENGINEER'S RESPONSIBILITY UNLESS THE CONTRACT DOCUMENTS SPECIFY OTHERWISE.

4. CONTRACTOR SHALL VERIFY SOIL CONDITIONS AT THE FOOTINGS AND MAKE ANY NECESSARY CORRECTIONS TO PLACE THEM ON FIRM NATIVE SOIL OR STRUCTURAL FILL COMPACTED TO 95% OF MAXIMUM DENSITY AT OPTIMUM MOISTURE CONTENT PER AMERICAN SOCIETY FOR TESTING AND MATERIALS, ASTM D698 (STANDARD PROCTOR), OR ASTM D1557 (MODIFIED PROCTOR). THE COMPACTION SHALL BE VERIFIED BY A QUALIFIED INSPECTOR APPROVED BY THE BUILDING OFFICIAL. COMPACTED STRUCTURAL FILL FOR DEPTHS GREATER THAN 12 INCHES SHALL COMPLY WITH PROVISIONS OF AN APPROVED GEOTECHNICAL REPORT. ASSUMED SOIL BEARING PRESSURE 1500 POUNDS PER SQUARE FOOT (PSF).

5. DESIGN LOADS: THE FOLLOWING ARE THE DESIGN REQUIREMENTS:

A) WIND DESIGN: BASIC WIND SPEED (3 SEC) = 85 MPH
IW = 1.0
EXPOSURE = C

B) SEISMIC DESIGN: BY OBSERVATION DOES NOT CONTROL DESIGN OF SIGNAGE.

C) ASSUMED LATERAL BEARING PRESSURE: 300PSF (150PSF BASE) WHICH INCLUDE INCREASES FOR 1/2" MOVEMENT AT THE GROUND LINE.

6. CONCRETE SHALL BE 2500 POUNDS PER SQUARE INCH (PSI) MINIMUM AT 28 DAYS. MIXING, PLACING AND CURING OF CONCRETE SHALL BE IN ACCORDANCE WITH THE AMERICAN CONCRETE INSTITUTE, ACI 318 AND IBC CHAPTER 19. ALL CONCRETE SHALL HAVE MAXIMUM W/C RATIO 0.50. ALL CONCRETE WITH REINFORCEMENT TO HAVE NO CHLORINE OR CHLORIDES. SLEEVES, OPENINGS, CONDUIT, AND OTHER EMBEDDED ITEMS NOT SHOWN ON THE STRUCTURAL DRAWINGS SHALL BE REVIEWED BY THE STRUCTURAL ENGINEER BEFORE POURING. WHERE NEW CONCRETE IS PLACED AGAINST EXISTING CONCRETE, THE EXISTING CONCRETE SURFACE SHALL BE CLEANED AND ROUGHENED TO A MINIMUM 1/4" AMPLITUDE.

7. ALL NON-SHRINK GROUT SHALL BE NON-METALLIC GROUT CONFORMING TO ASTM C1107, AND SHALL HAVE A SPECIFIED MINIMUM COMPRESSIVE STRENGTH AT 28 DAYS OF 5000 PSI. PRE-GROUTING OF BASE PLATES IS NOT PERMITTED.

8. ALL REINFORCING STEEL (RESTL) TO BE DEFORMED BARS PER ASTM A615 GRADE 60. ALL WELDED WIRE FABRIC SHALL CONFORM TO ASTM A185. UNLESS NOTED OTHERWISE, SET MAIN RESTL 3" FROM EARTH AND 2" FROM FORMED SURFACES. BAR LENGTHS DETAILED ARE OUT TO OUT AND DO NOT INCLUDE ALLOWANCE FOR HOOKS OR BENDS. SET ALL ANCHOR BOLTS AND DOWELS BEFORE POURING CONCRETE. ALL REINFORCING STEEL TO BE WELDED SHALL BE ASTM A706 AS APPLICABLE. USE MINIMUM 30" LAP FOR #4 BAR AND SMALLER UNLESS NOTED OTHERWISE (UNO). USE MINIMUM 36" LAP FOR #5 BAR UNO. ALL REINFORCING STEEL SHALL BE SUPPORTED ON WELL-CURED CONCRETE BLOCKS OR APPROVED METAL CHAIRS, AS SPECIFIED BY THE CRSI MANUAL OF STANDARD PRACTICE, MSP-1.

9. ALL STRUCTURAL AND MISCELLANEOUS STEEL TO BE ASTM A992 FOR W-SECTIONS AND A36 FOR ALL OTHER SECTIONS, PLATES AND BARS. ALL RECTANGULAR HSS SECTIONS SHALL BE ASTM A500, GRADE B, FY= 46000 PSI AND ALL ROUND HSS SECTIONS SHALL BE ASTM A500, GRADE B, FY = 42000 PSI. ALL STRUCTURAL STEEL PIPE SHALL BE ASTM A53, GRADE B, TYPE E OR S, FY= 35000 PSI. ALL BOLTS TO BE ASTM A307 WITH MATCHING NUTS UNLESS NOTED OTHERWISE. UNLESS CONNECTION IS NOTED AS SLIP-CRITICAL OR PRENENTIONED, NUTS SHALL BE TIGHTENED TO A SNUG TIGHT CONDITION PER RESEARCH COUNCIL ON STRUCTURAL CONNECTIONS (RCSC) SPECIFICATION FOR STRUCTURAL JOINTS, SECTION 8.1. EMBEDDED SURFACES SHALL BE FREE OF CONTAMINANTS. ALL ZINC (GALV.) COATINGS ON IRON AND STEEL PRODUCTS SHALL CONFORM TO ASTM A123. REPAIRS OF GALVANIZED COATINGS ARE TO CONFORM TO ASTM A780. ALL EXPOSED STRUCTURAL STEEL TO HAVE ONE FINISH COAT OF RUST INHIBITING PAINT, COLOR BY OWNER. WELD PROCEDURE FOR ALL MOMENT CONNECTIONS SHALL ENSURE THAT WELDING FILLER METAL HAVE A NOTCH TOUGHNESS OF NOT LESS THAN 20 FT-LBS AT ZERO DEGREES FAHRENHEIT AS MEASURED BY STANDARD CHARPY V-NOTCH (CVN) TEST, ASTM E 23 IN ACCORDANCE WITH APPLICABLE FILLER METAL SPECIFICATION REFERENCED IN AWS D1.1. ALL WELDING TO CONFORM TO AMERICAN WELDING SOCIETY (AWS) D1.1 USING E70XX ELECTRODES. WELD LENGTHS SHOWN ARE EFFECTIVE AS SPECIFIED PER THE SPECIFICATIONS OF THE AMERICAN INSTITUTE OF STEEL CONSTRUCTION (AISC). WELDING SHALL BE BY AWS CERTIFIED WELDERS FOR WELD TYPES SPECIFIED. WHERE WELD LENGTHS ARE NOT SHOWN, THE WELD SHALL BE FULL LENGTH OF MEMBERS BEING JOINED. ALL BUTT WELDS SHALL BE FULL PENETRATION WELDS UNLESS NOTED OTHERWISE ON STRUCTURAL DRAWINGS. ALL WELDS TO BE PRIMERED.

10. ALL LIGHT GAGE STEEL MEMBERS MUST BE DESIGNED IN ACCORDANCE WITH THE SPECIFICATION FOR THE DESIGN OF COLD-FORMED STEEL STRUCTURES, NORTH AMERICAN SPECIFICATION FOR THE DESIGN OF COLD-FORMED STEEL STRUCTURAL MEMBERS AND COMMENTARY, AISI/COS/NASPEC 2001. THE NASPEC SUPERSEDES THE PREVIOUS EDITIONS OF THE SPECIFICATION FOR THE DESIGN OF COLD-FORMED STEEL STRUCTURAL MEMBERS PUBLISHED BY THE AMERICAN IRON AND STEEL INSTITUTE (AISI) AND PREVIOUS EDITIONS OF THE CSA STANDARD S136, COLD FORMED STEEL STRUCTURAL MEMBERS, PUBLISHED BY THE CANADIAN STANDARDS ASSOCIATION.

LIGHT-GAGE STEEL CONSTRUCTION:
ALL LIGHT GAGE STEEL WELDED AND BOLTED CONNECTIONS ARE TO BE DESIGNED PER CHAPTER E, OF THE SPECIFICATION WITH SUFFICIENT CLEARANCES, EDGE DISTANCES, SPACING, AND END DISTANCES TO ACHIEVE THE APPROPRIATE STRENGTH OF THE ASSOCIATED CONNECTION. BOLTED CONNECTIONS ARE TO USE AS A MINIMUM EITHER ASTM A307(TYPE A), CARBON STEEL BOLTS AND STUDS, 60,000 PSI TENSILE STRENGTH, OR ASTM A325, STRUCTURAL BOLTS, STEEL, HEATED TREATED, 120/105 KSI MINIMUM TENSILE STRENGTH. SCREW CONNECTIONS FOR SHEAR, TENSION, BEARING, PULL-OUT, PULLOVER, ETC. ARE TO BE DESIGNED BASED ON THE EQUATIONS AS SPECIFIED IN SECTION E4 WITH THE APPLICABLE FACTORS OF SAFETY WHICH PROVIDE THE BASIS FOR DESIGN. ALL SCREWS SHALL BE THREAD-FORMING OR THREAD-CUTTING, WITH OR WITHOUT A SELF-DRILLING POINT. SCREWS SHALL BE INSTALLED AND TIGHTENED IN ACCORDANCE WITH THE MANUFACTURER'S RECOMMENDATIONS. ALL FASTENERS THAT FASTEN DISSIMILAR METALS (SUCH AS ALUMINUM AND STEEL) ARE TO BE STAINLESS STEEL OR ZINC-PLATED CORROSION RESISTANT SCREWS.

COLD-FORMED STRUCTURAL MATERIAL:
ALL STRUCTURAL LIGHT-GAGE STEEL MEMBERS SHALL BE MILL CERTIFIED PRIME STEEL MEETING ASTM A570 / A570M - 97 STRUCTURAL QUALITY; GRADE 33 FOR STEELS THINNER THAN 16 GAGE (54 MILS) AND GRADE 50 FOR STEELS 16 GAGE (54 MILS) AND THICKER. GRADE 33 STEEL SHALL HAVE A FY = 33000 PSI AND FU = 45000 PSI. GRADE 50 STEEL SHALL HAVE A FY =50000 PSI AND FU = 60000 PSI. ALL LIGHT-GAGE STEEL SHALL BE GALVANIZED PER ASTM A653 / A653M -00 WITH MINIMUM COATING OF G60 FOR EXTERIOR AND/OR LOAD BEARING MEMBERS AND G40 FOR INTERIOR NON-LOAD BEARING MEMBERS.

11. NON STRUCTURAL PORTIONS OF PROJECT, INCLUDING BUT NOT LIMITED TO, ELECTRICAL, MECHANICAL, LAND USE, SITE PLANNING, EROSION CONTROL, FLASHING AND WATER-PROOFING ARE BEYOND THE SCOPE OF THESE DRAWINGS AND ARE PROVIDED BY OTHERS.

12. ALL STRUCTURAL ALUMINUM SHAPES AND PLATES TO BE 6061-T6. ALL WELDS TO USE 4043 ALUMINUM FILLER ALLOY. A PROTECTIVE BARRIER SHALL BE PROVIDED BETWEEN ALL STEEL AND ALUMINUM TO PREVENT CORROSION. ALL WELDING TO CONFORM TO AMERICAN WELDING SOCIETY (AWS) D1.2. WELD LENGTHS SHOWN ARE EFFECTIVE AS SPECIFIED PER THE ALUMINUM DESIGN MANUAL. WELDING SHALL BE BY AWS CERTIFIED WELDERS FOR WELD TYPES SPECIFIED. WHERE WELD LENGTHS ARE NOT SHOWN, THE WELD SHALL BE FULL LENGTH OF MEMBERS BEING JOINED. ALL BUTT WELDS SHALL BE FULL PENETRATION WELDS UNLESS NOTED OTHERWISE ON STRUCTURAL DRAWINGS. ALL WELDS TO RECEIVE THE SAME FINISH COAT AS THE MEMBER BEING WELDED. UNLESS NOTED OTHERWISE, ALL STAINLESS STEEL BOLTS TO BE ASTM A304 WITH MATCHING NUTS. NUTS SHALL BE TIGHTENED TO A SNUG TIGHT CONDITION PER RESEARCH COUNCIL ON STRUCTURAL CONNECTIONS (RCSC) SPECIFICATION FOR STRUCTURAL JOINTS, SECTION 8.1.

13. CONTRACTOR TO VERIFY ALL CONDITIONS PRIOR TO FABRICATION OR INSTALLATION.

REGISTERED PROFESSIONAL ENGINEER
ERIC R. WATSON
No. C058302
Exp 6/30/12
CIVIL
STATE OF CALIFORNIA
6-29-11

CITY OF SAN JOSE
BUILDING DIVISION
B.P.# _____
DATE 02/22/12 VC

COPYRIGHT 2011
Miller Consulting Engineers,Inc.

MILLER
CONSULTING
ENGINEERS

9570 SW Barbur Blvd.
Suite One Hundred
Portland, OR 97219-5412
Phone (503) 246-1250
Fax (503) 246-1395

TACO BELL SIGNAGE
CUMMING RESOURCES LLC
840 S. BASCOM AVE.
SAN JOSE, CA

SHEET CONTENT
STRUCTURAL NOTES

JOB No. 110492
DRAWN CJM
CHECKED
DATE 06-28-11
REVISIONS

SHEET
S0.1

PC#11-025250

CANOPY SCHEDULE:

	DIMENSIONS:											Reactions (lb)				
SIZE:	a	b	c	d	e	f	g	h	i	j	k	R1x	R1y	R2x	R2y	Notes/Comments:
9'-2" X 4'-6"	1'-8 7/8"	2'-9 1/8"	0'-0"	3'-2 3/16"	3'-7 1/2"	9'-2"	4'-6"	3'-9 5/8"	7'-0"	2'-3"	6'-11 1/4	236	73	236	321	

NOTES:
1. SEE S0.1 FOR STRUCTURAL NOTES.
2. ALL BOLTS TO EXISTING STRUCTURE TO BE 3/8" DIA. (MIN.) WITH 3" EMBEDMENT INTO SOLID WOOD FRAMING. ANCHOR TO BE PLACED IN CENTER OF STUD OR INTO BLOCKING AS SHOWN IN DETAIL 3. HOLE FOR LAG TO BE PRE-DRILLED PER SECTION 11.1.3 OF THE NATIONAL DESIGN SPECIFICATION (NDS).
3. BUILDING FRAMING DESIGN BY OTHERS.
4. USE 4X10 BLOCKING WITH (2) SIMPSON A34 CLIPS EA. END AT TOP AND BOTTOM TO EXISTING WOOD FRAMING. TYPICAL AS REQUIRED. SEE DETAIL 3.
5. ALL CANOPIES ARE PREMANUFACTURED OFF SITE.
6. SEE MANUFACTURER SHOP DRAWINGS FOR FINISHES AND INSTALLATION INSTRUCTIONS.

REGISTERED PROFESSIONAL ENGINEER
ERIC R. WATSON
No. C058302
Exp 6/30/12
CIVIL
STATE OF CALIFORNIA
6-29-11

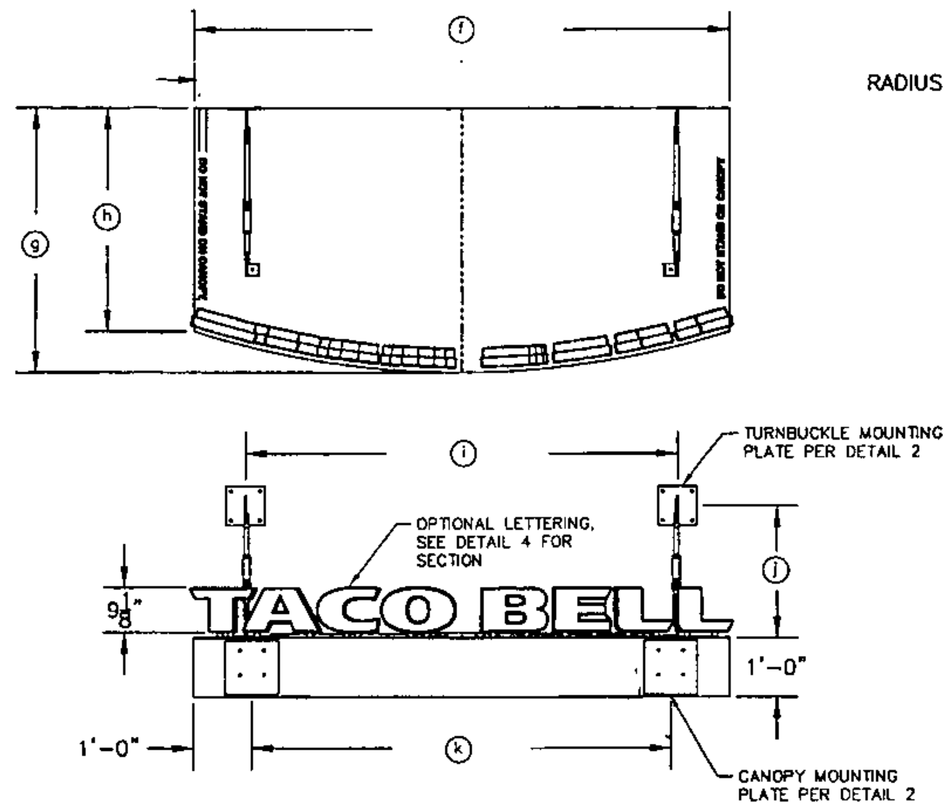

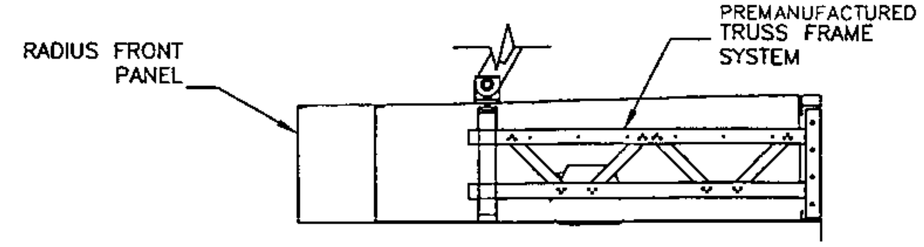

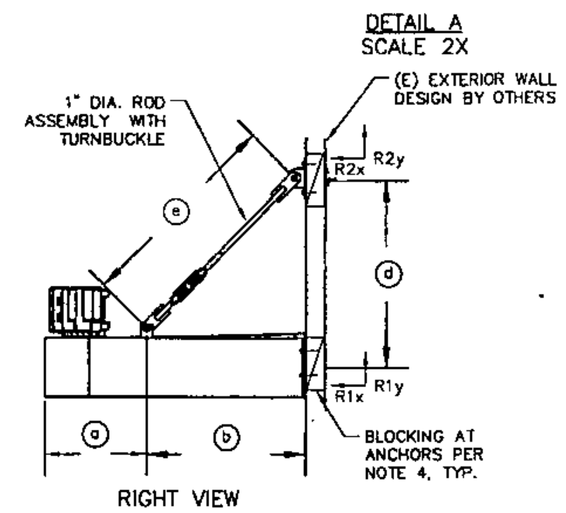

1 CANOPY ELEVATIONS
N.T.S.

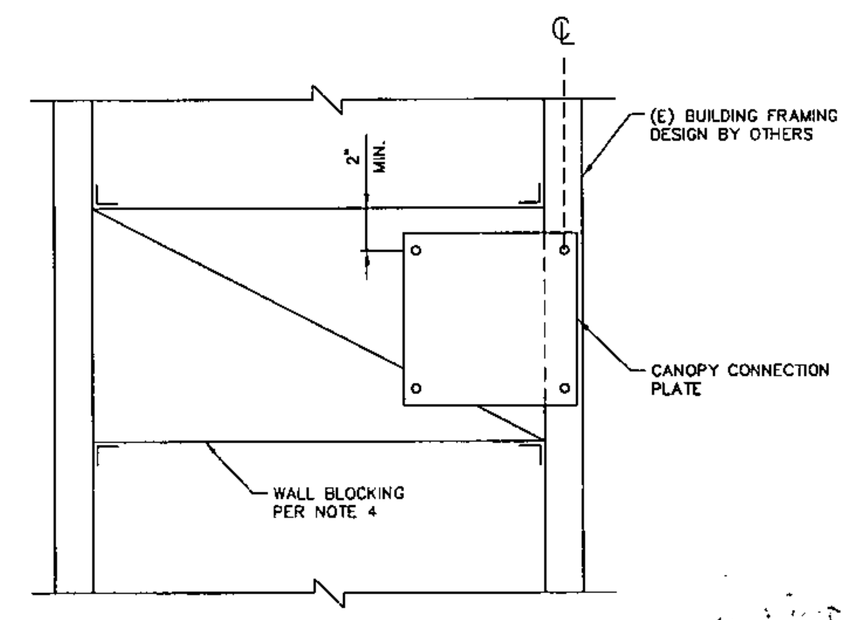

3 WALL ANCHORAGE DETAIL
N.T.S.

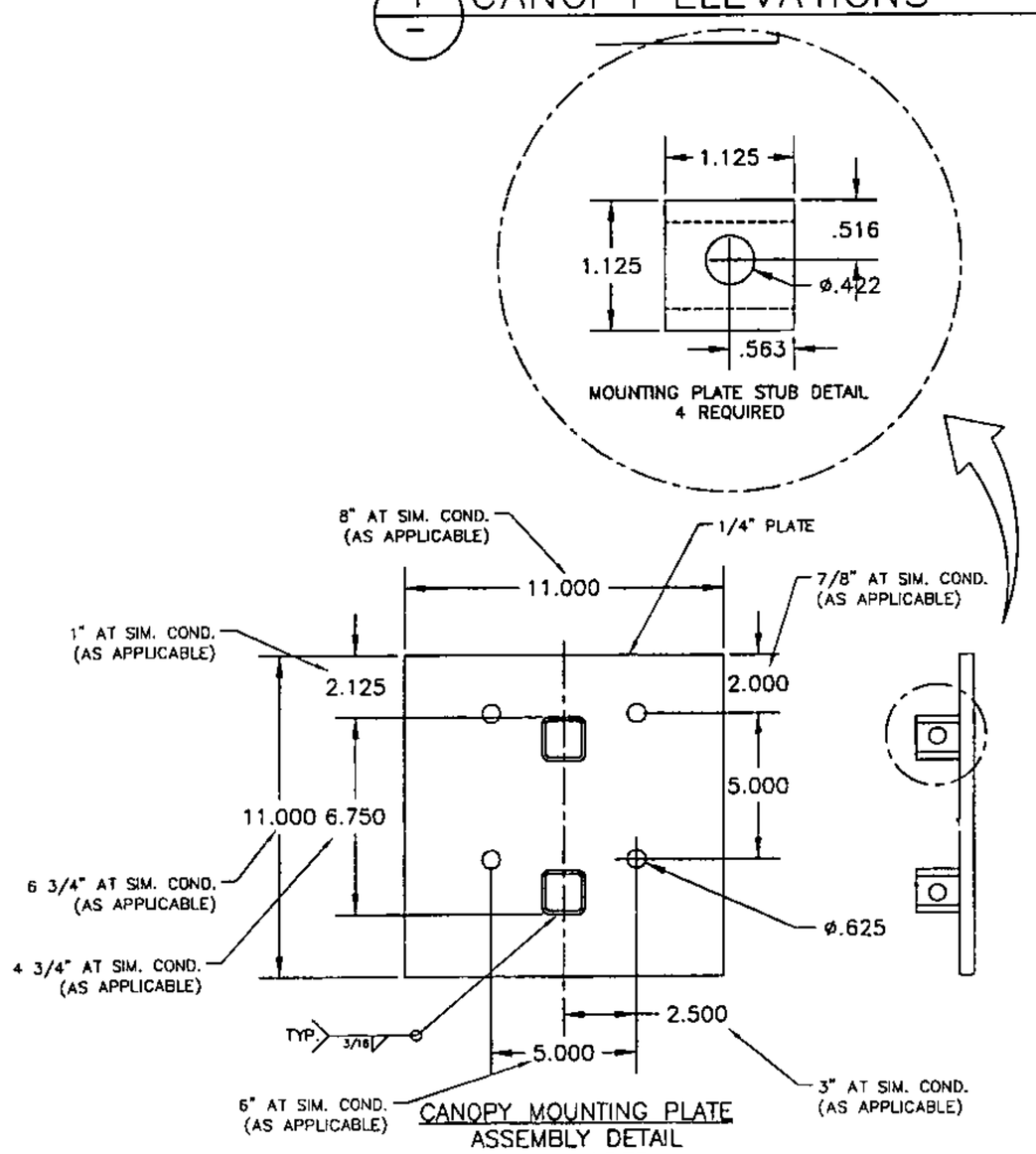

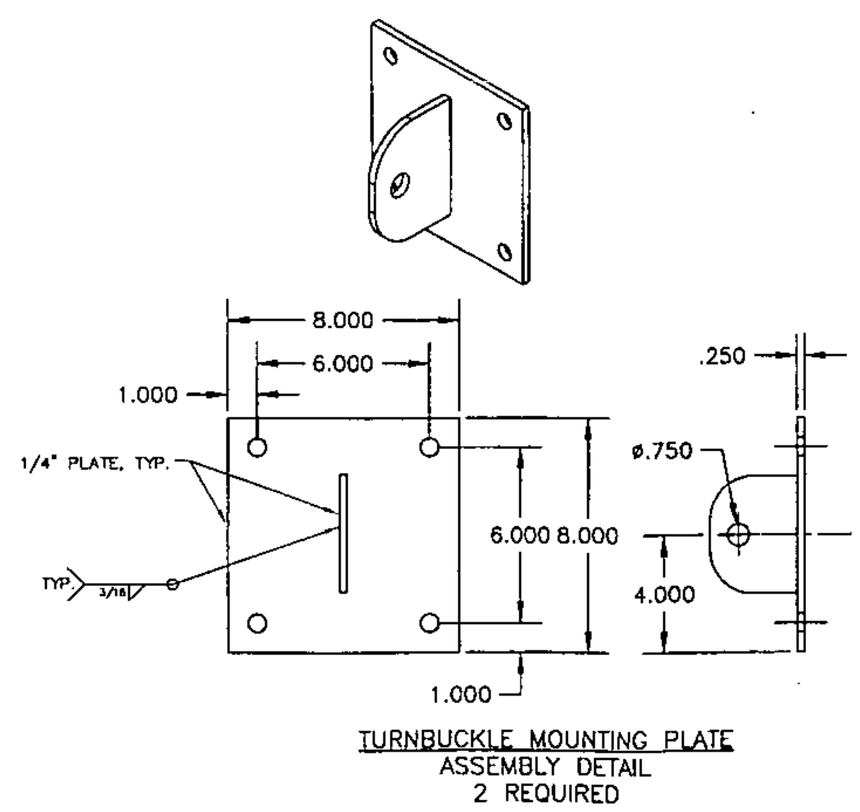

2 CONNECTION PLATE DETAILS
N.T.S.

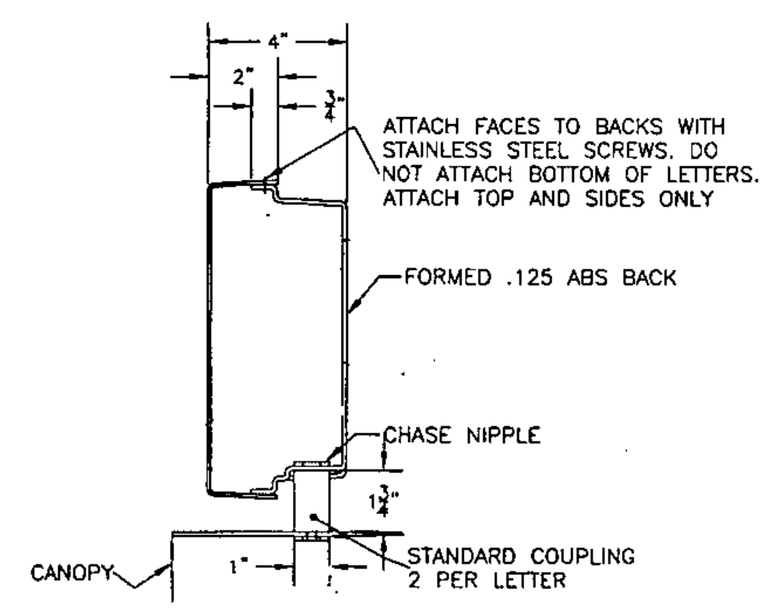

4 OPTIONAL CANOPY LETTER SECTION
N.T.S.

SAN JOSE BUILDING DIVISION
P.#
DATE

COPYRIGHT 2011
Miller Consulting Engineers,Inc.

MILLER
CONSULTING
ENGINEERS
9570 SW Barbur Blvd.
Suite One Hundred
Portland, OR 97219-5412
Phone (503) 246-1250
Fax (503) 246-1395

TACO BELL SIGNAGE
CUMMING RESOURCES LLC
840 S. BASCOM AVE.
SAN JOSE, CA

SHEET CONTENT
BUILDING CANOPIES

JOB No. 110492
DRAWN CJM
CHECKED
DATE 06-28-11
REVISIONS

SHEET
S1.0

NOTES:
1. SEE S0.1 FOR STRUCTURAL NOTES.
2. ALL BUILDING FRAMING DESIGN BY OTHERS.
3. ALL ARCH ELEMENTS ARE PREMANUFACTURED OFF SITE.
4. SEE MANUFACTURER SHOP DRAWINGS FOR FINISHES AND INSTALLATION INSTRUCTIONS.

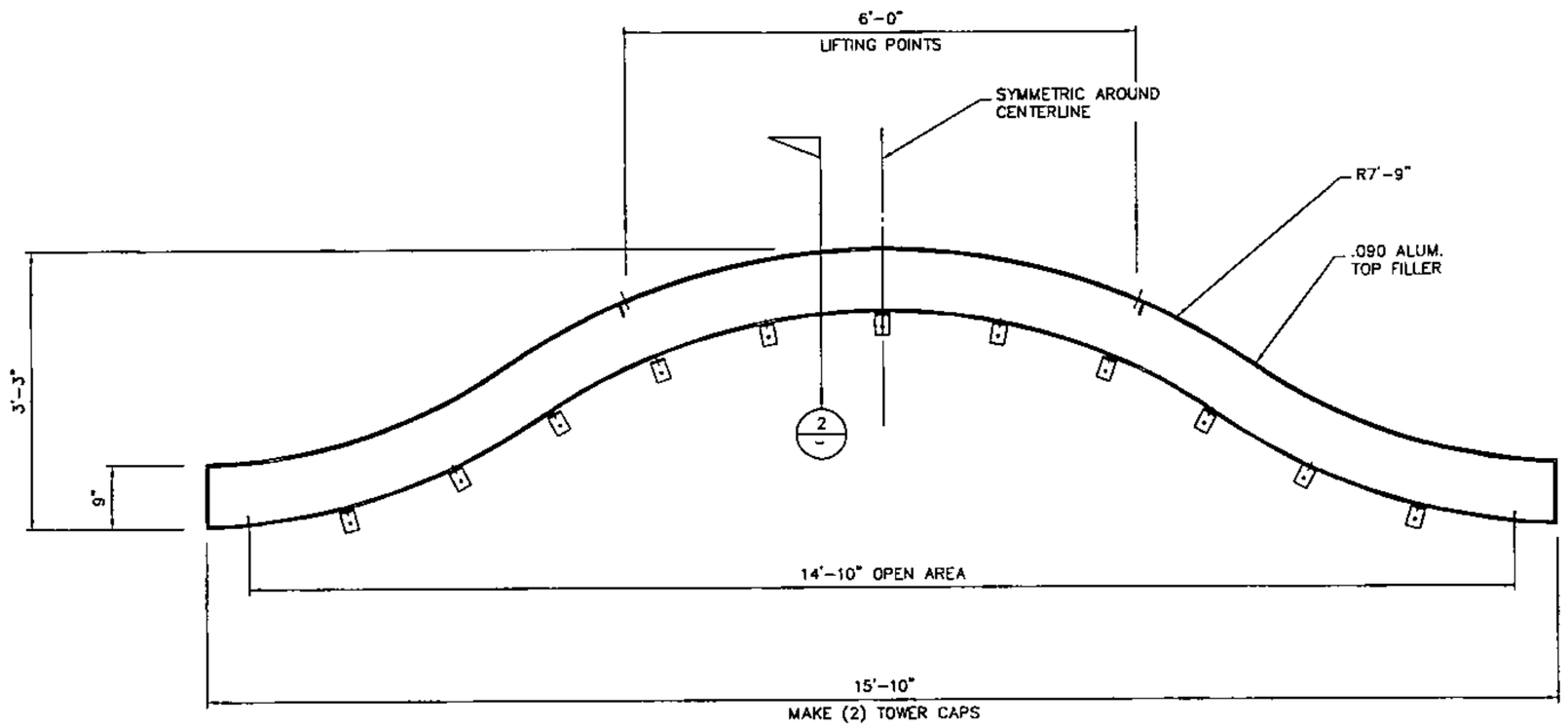

1 ELEVATION VIEW

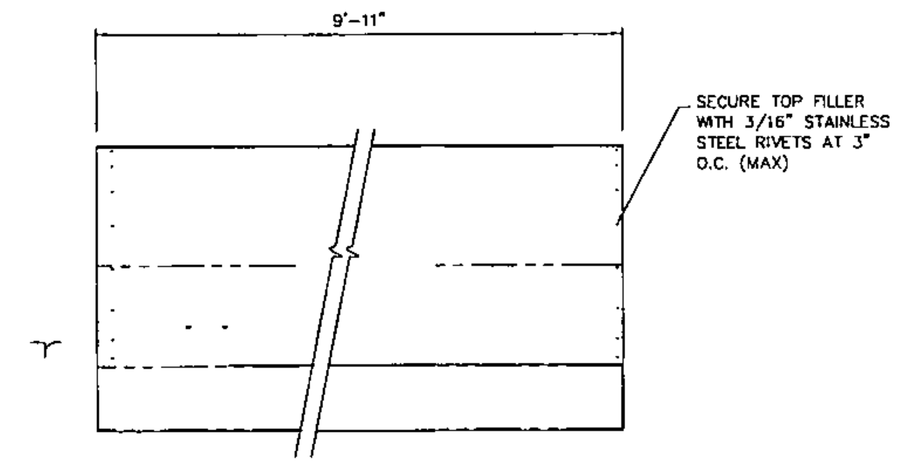

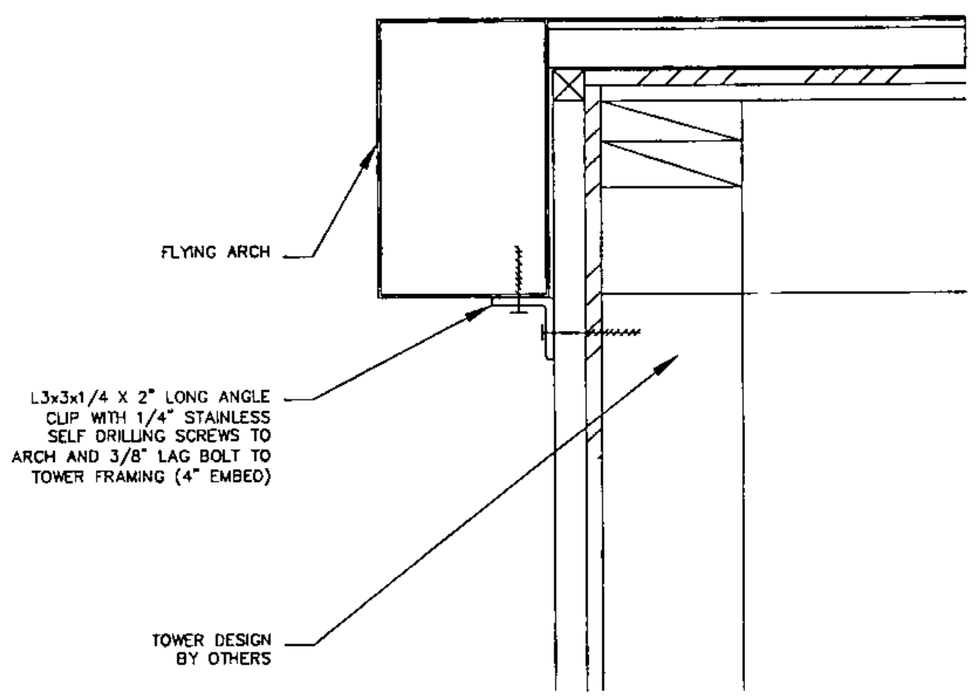

2 MOUNTING DETAILS

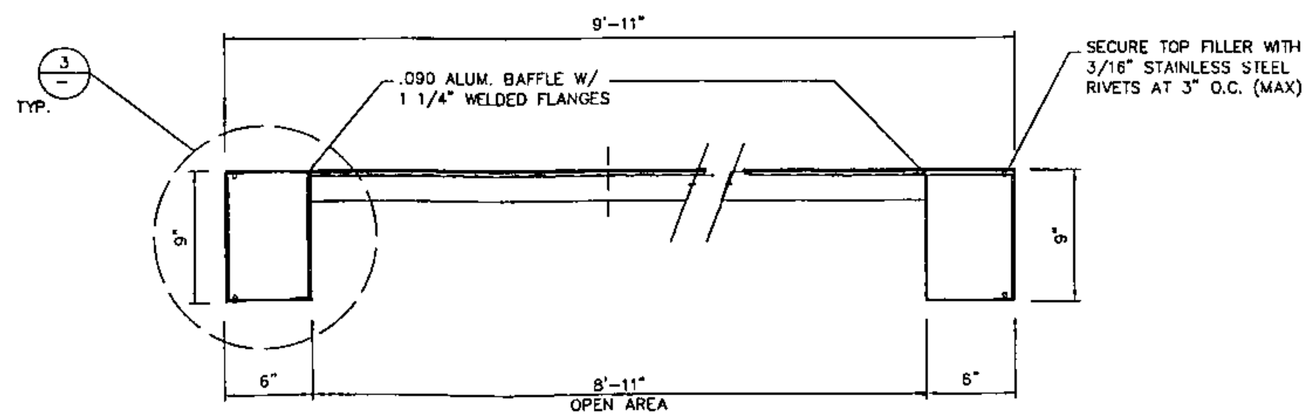

3 SECTION VIEW

REGISTERED PROFESSIONAL ENGINEER
ERIC R. WATSON
No. C058302
Exp 6/30/12
CIVIL
STATE OF CALIFORNIA
6-29-11

CITY OF SAN JOSE
BUILDING DIVISION
B.P.#
DATE

COPYRIGHT 2011
Miller Consulting Engineers,Inc.

MILLER
CONSULTING
ENGINEERS

9570 SW Barbur Blvd.
Suite One Hundred
Portland, OR 97219-5412
Phone (503) 246-1250
Fax (503) 246-1395

TACO BELL SIGNAGE
CUMMING RESOURCES LLC
840 S. BASCOM AVE.
SAN JOSE, CA

SHEET CONTENT
FLYING ARCH CAP

JOB No. 110492
DRAWN CJM
CHECKED
DATE 06-28-11
REVISIONS
SHEET S2.0

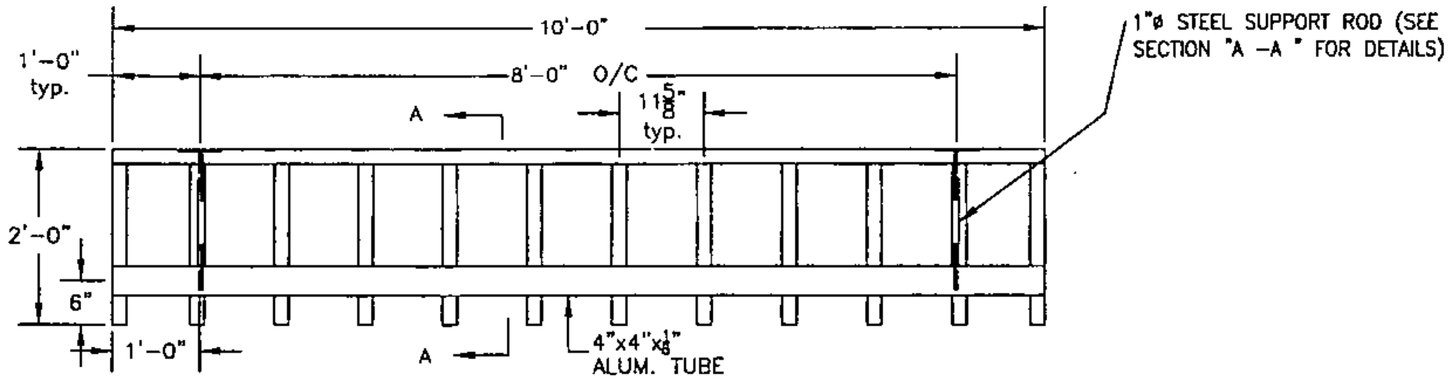

PLAN VIEW

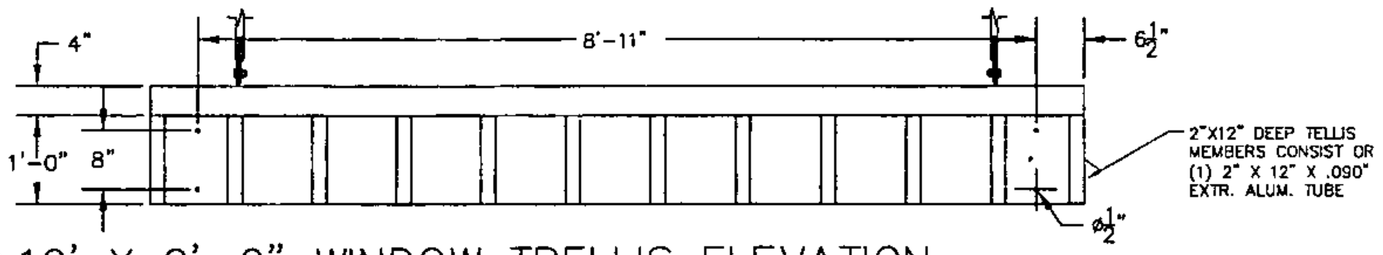

1 — 10' X 2'-0" WINDOW TRELLIS ELEVATION

N.T.S.

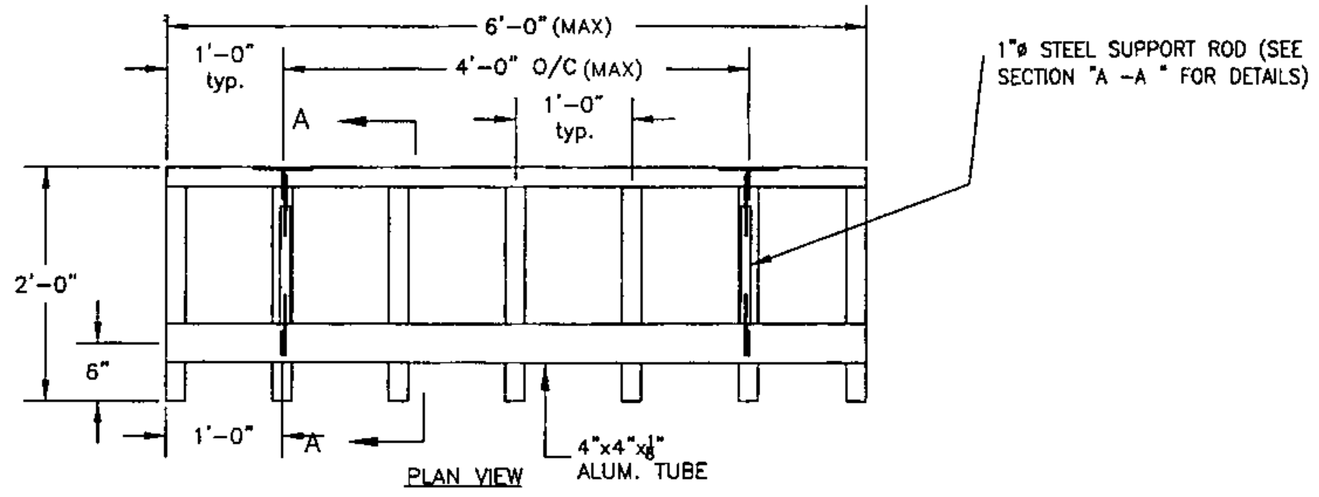

PLAN VIEW

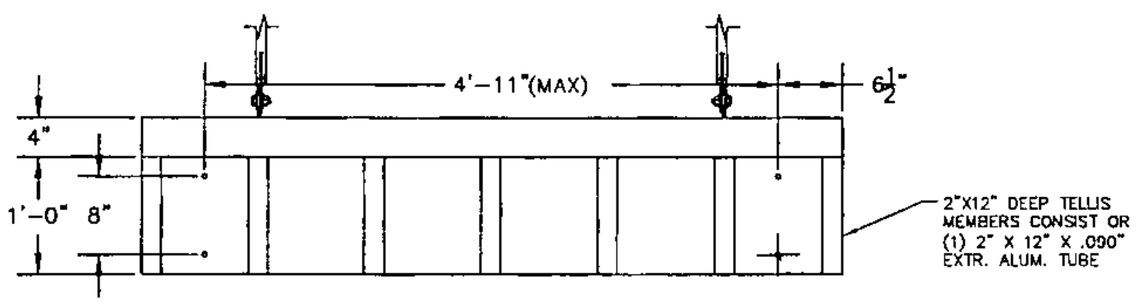

2 — 6'-0" X 2'-0" WINDOW TRELLIS ELEVATION

N.T.S.

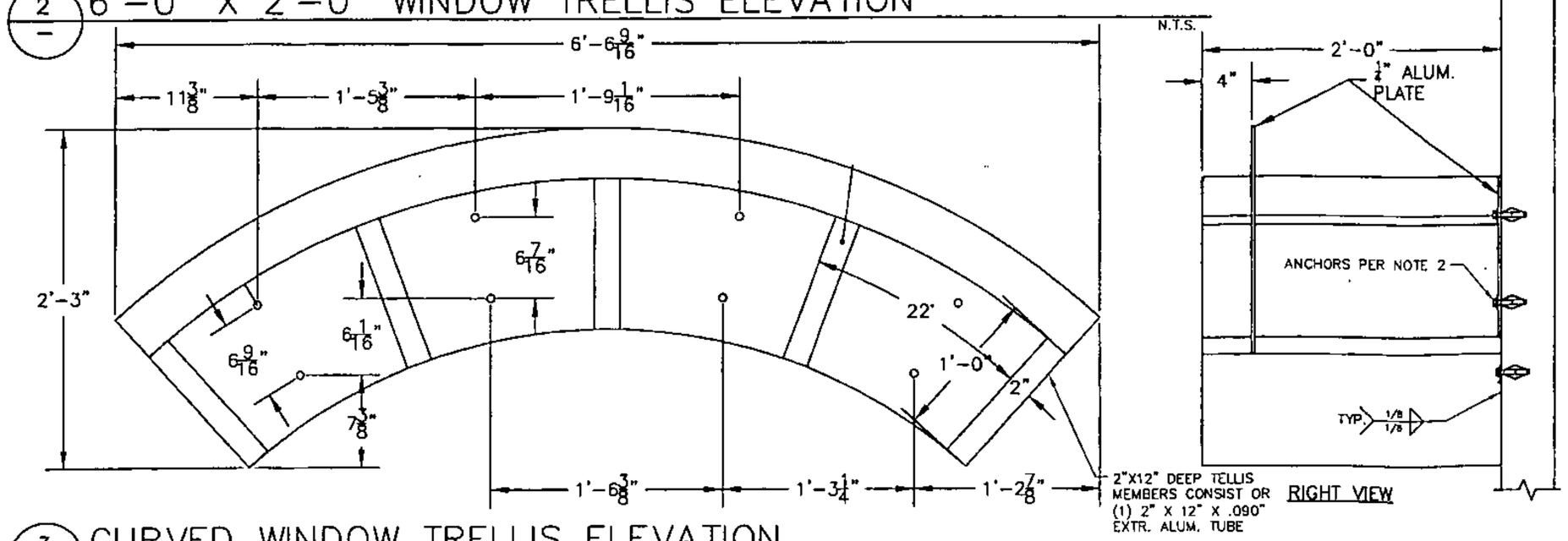

3 — CURVED WINDOW TRELLIS ELEVATION

N.T.S.

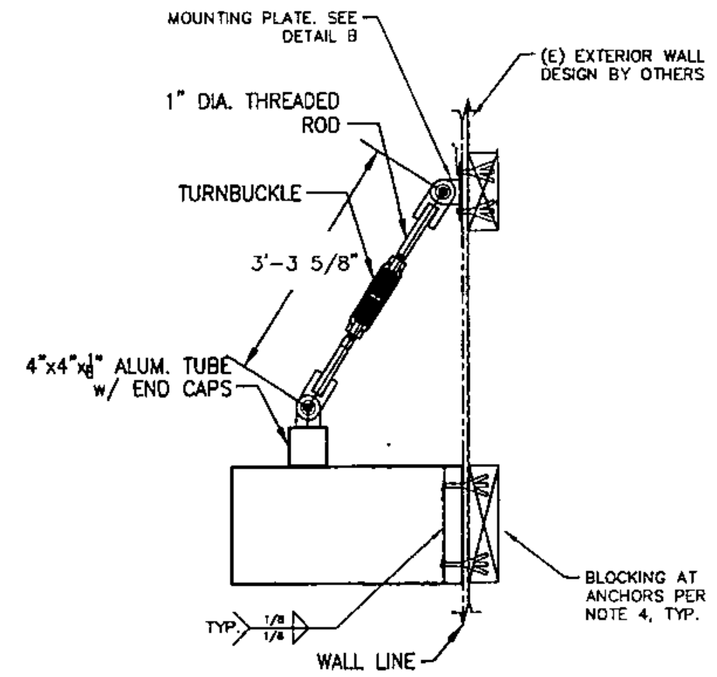

SECTION A-A

NOTES:
1. SEE S0.1 FOR STRUCTURAL NOTES.
2. ALL BOLTS TO EXISTING STRUCTURE TO BE 3/8" DIA. (MIN.) WITH 3" EMBEDMENT INTO SOLID WOOD FRAMING. ANCHOR TO BE PLACED IN CENTER OF STUD OR INTO BLOCKING AS SHOWN IN DETAIL A. HOLE FOR LAG TO BE PRE-DRILLED PER SECTION 11.1.3 OF THE NATIONAL DESIGN SPECIFICATION (NDS).
3. BUILDING FRAMING DESIGN BY OTHERS.
4. USE 4X10 BLOCKING WITH (2) SIMPSON A34 CLIPS EA. END AT TOP AND BOTTOM TO EXISTING WOOD FRAMING, TYPICAL AS REQUIRED. SEE DETAIL A.
5. ALL TRELLISES ARE PREMANUFACTURED OFF SITE.
6. SEE MANUFACTURER SHOP DRAWINGS FOR FINISHES AND INSTALLATION INSTRUCTIONS.
7. TRELLISES HAVE NO ROOF OR COVER AND HAVE MINIMAL LOADING TO THE STRUCTURE. THEY ARE DECORATIVE ONLY.

REGISTERED PROFESSIONAL ENGINEER
ERIC R. WATSON
No. C058302
Exp 6/30/12
CIVIL
STATE OF CALIFORNIA
6-29-11

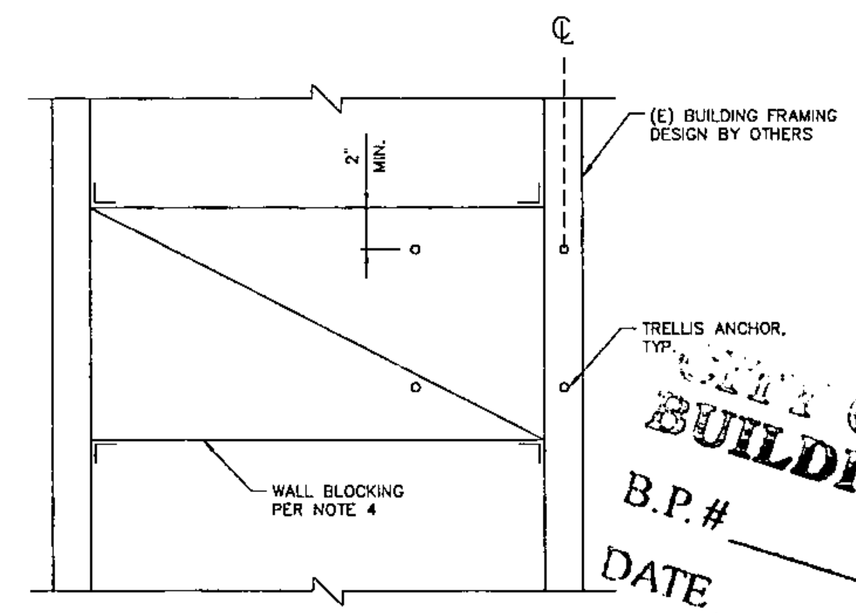

A — WALL ANCHORAGE DETAIL

N.T.S.

CITY OF SAN JOSE
BUILDING DIVISION
B.P.#
DATE

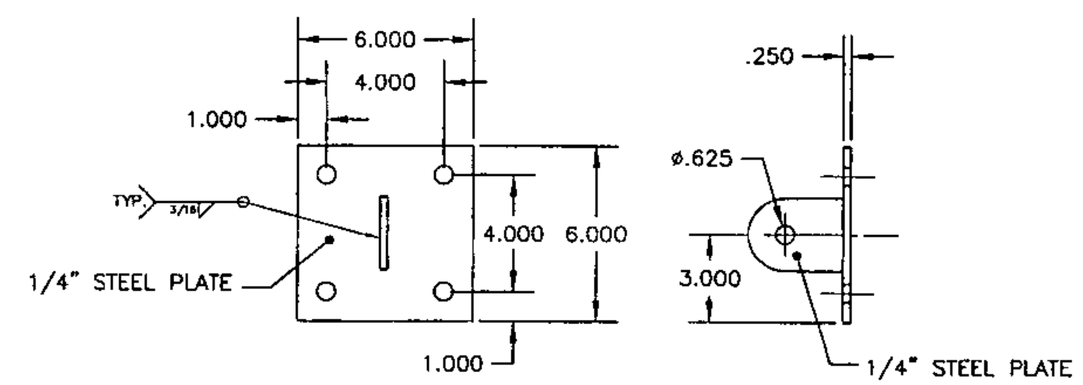

TURNBUCKLE MOUNTING PLATE
ASSEMBLY DETAIL
2 REQUIRED

B — WALL ANCHORAGE DETAIL

N.T.S.

COPYRIGHT 2011
Miller Consulting Engineers,Inc.

MILLER
CONSULTING
ENGINEERS
9570 SW Barbur Blvd.
Suite One Hundred
Portland, OR 97219-5412
Phone (503) 246-1250
Fax (503) 246-1395

TACO BELL SIGNAGE
PLUMMING RESOURCES LLC
840 S. BASCOM AVE.
SAN JOSE, CA

SHEET CONTENT
WINDOW TRELLISES

JOB No. 110492
DRAWN CJM
CHECKED CJW
DATE 06-28-11
REVISIONS

SHEET S3.0

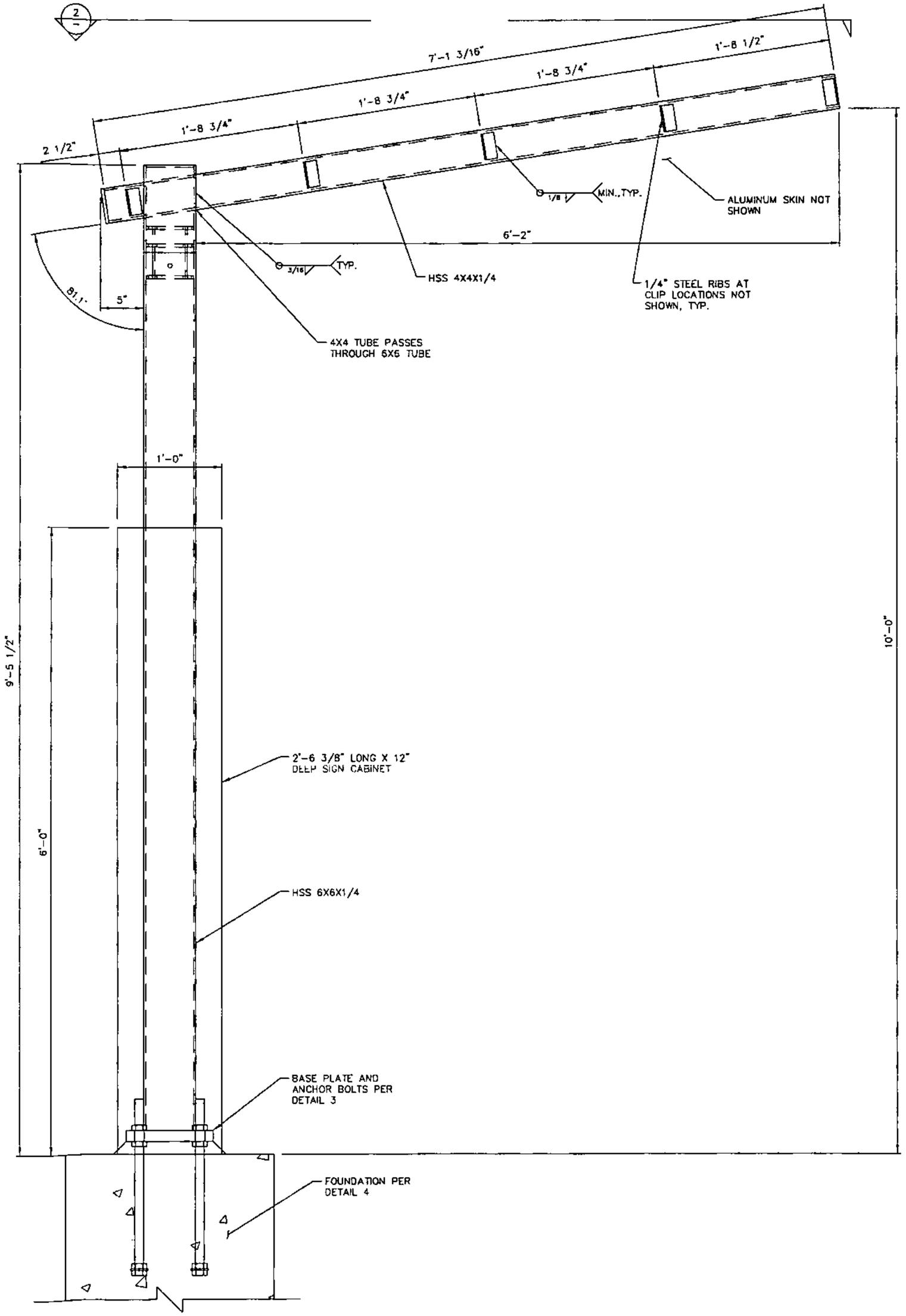

1 CANOPY ELEVATION

1 1/2"=1'-0"

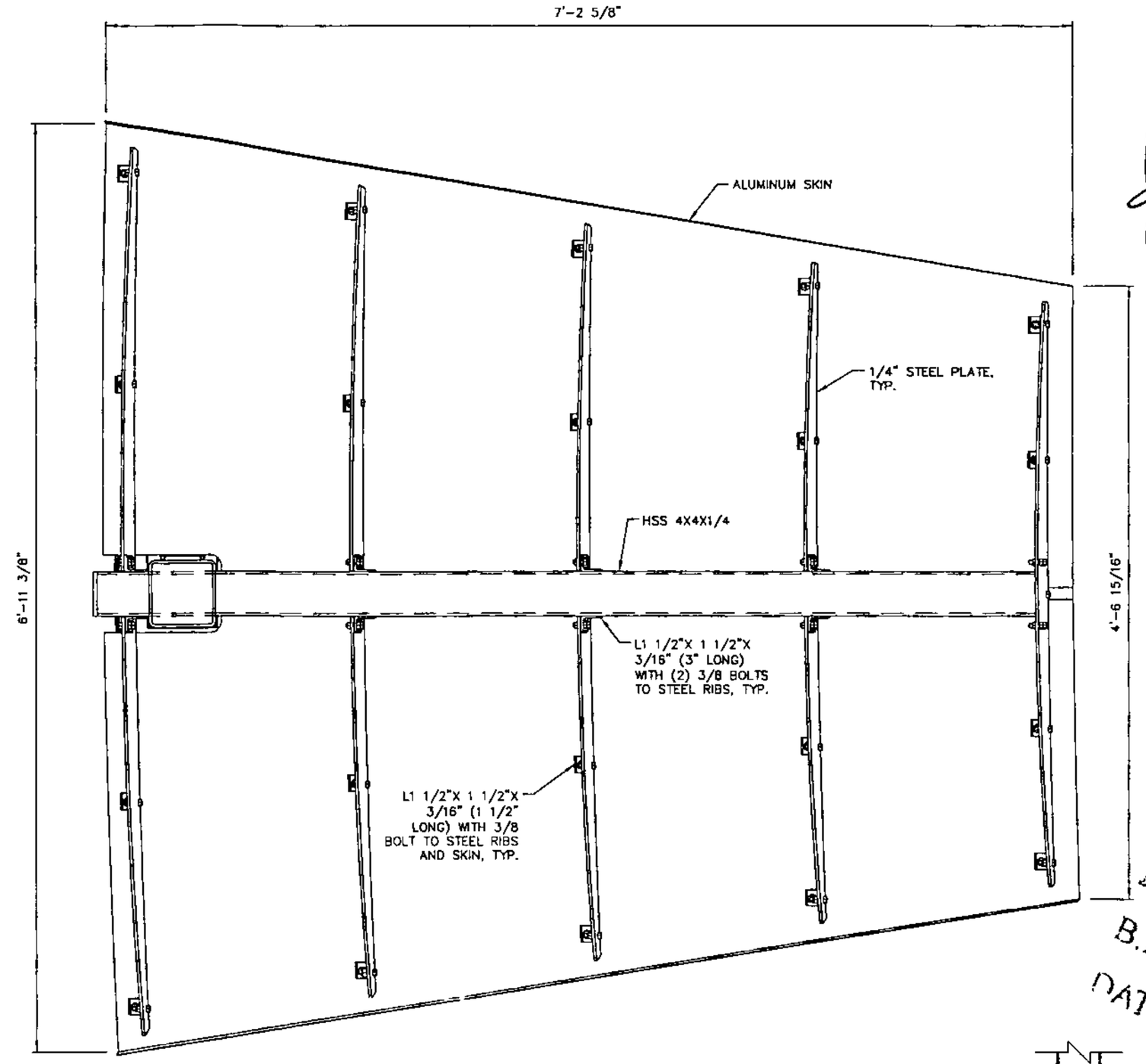

2 CANOPY PLAN

1 1/2"=1'-0"

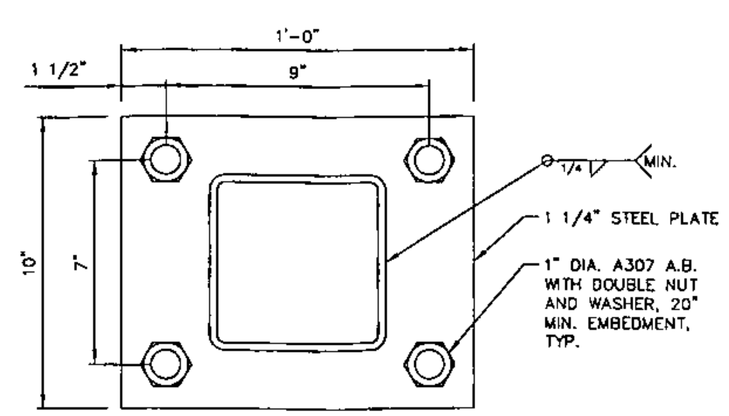

3 BASE PLATE

3"=1'-0"

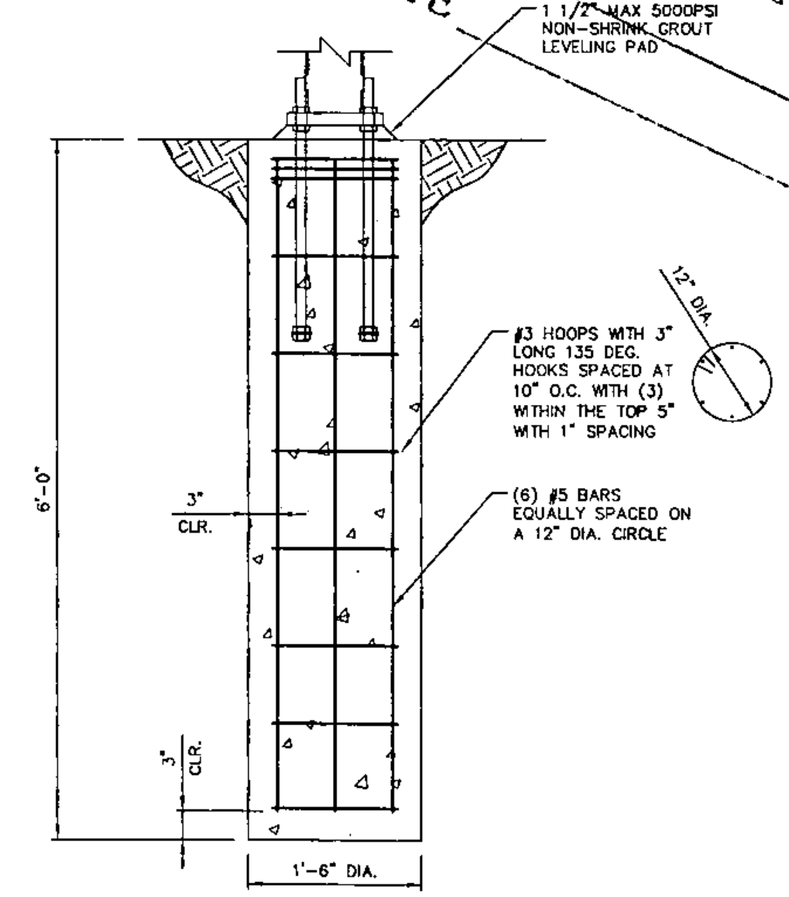

4 FOOTING DETAILS

1"=1'-0"

REGISTERED PROFESSIONAL ENGINEER
ERIC R. WATSON
No. C058302
Exp 6/30/12
CIVIL
STATE OF CALIFORNIA
6-29-11

CITY OF SAN JOSE
BUILDING DIVISION
B.P.#
DATE

NOTES:
1. SEE S0.1 FOR STRUCTURAL NOTES.
2. ALL FRAMING IS PREMANUFACTURED OFF SITE.
3. SEE MANUFACTURER SHOP DRAWINGS FOR FINISHES AND INSTALLATION INSTRUCTIONS.

COPYRIGHT 2011
Miller Consulting Engineers,Inc.

MILLER
CONSULTING
ENGINEERS

9570 SW Barbur Blvd.
Suite One Hundred
Portland, OR 97219-5412
Phone (503) 246-1250
Fax (503) 246-1395

TAGO BELL SIGNAGE

CUMMINGS RESOURCES LLC

840 S. BASCOM AVE.
SAN JOSE, CA

SHEET CONTENT
ASSET EVOLUTION
DT CANOPY

JOB No. 110492

DRAWN CJM

CHECKED

DATE 06-28-11

REVISIONS

SHEET S4.0

NOTES:
1. SEE S0.1 FOR STRUCTURAL NOTES.
2. ALL FRAMING IS PREMANUFACTURED OFF SITE.
3. SEE MANUFACTURER SHOP DRAWINGS FOR FINISHES AND INSTALLATION INSTRUCTIONS.

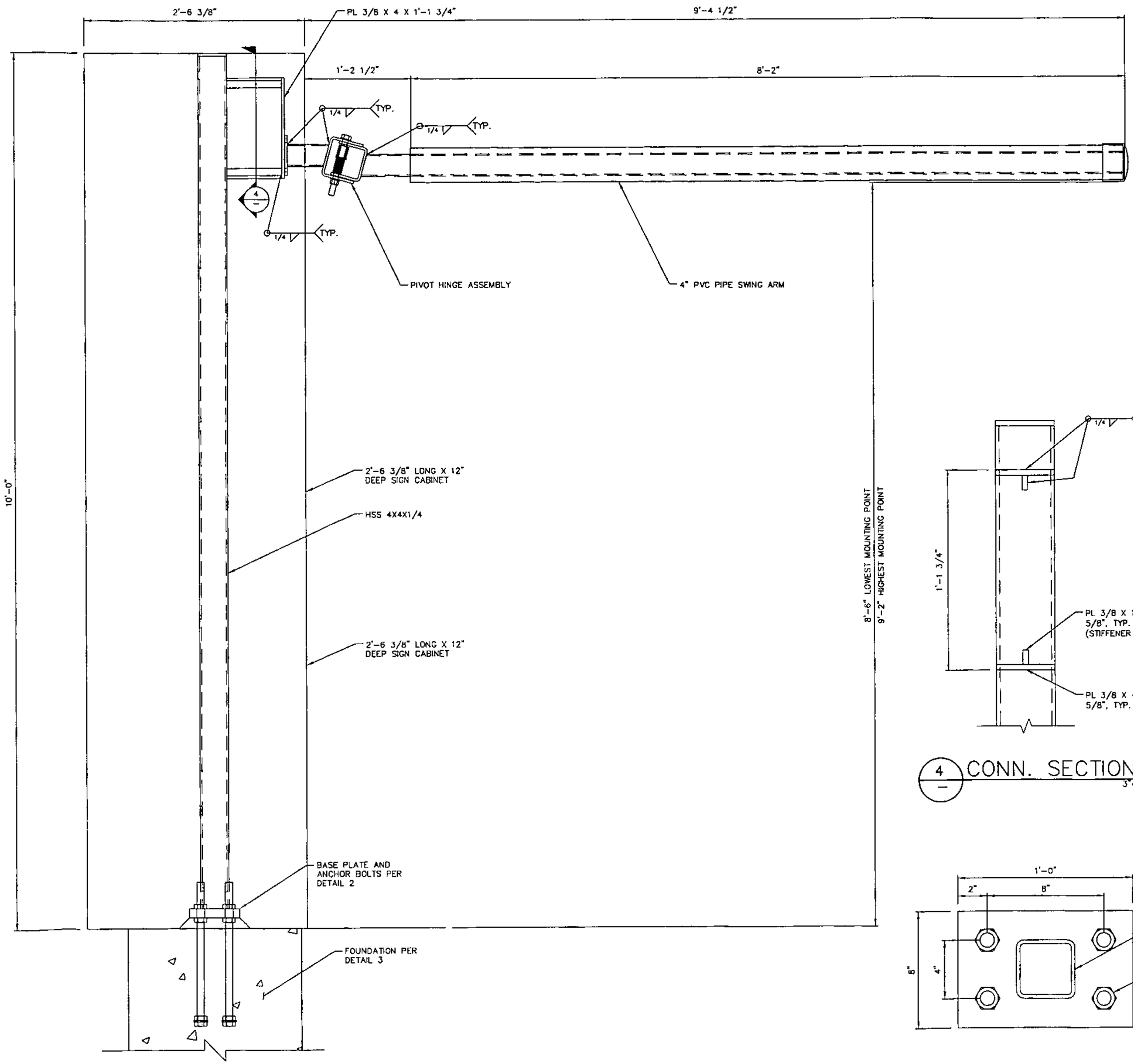

1 ENTRY PORTAL ELEVATION
1 1/2"=1'-0"

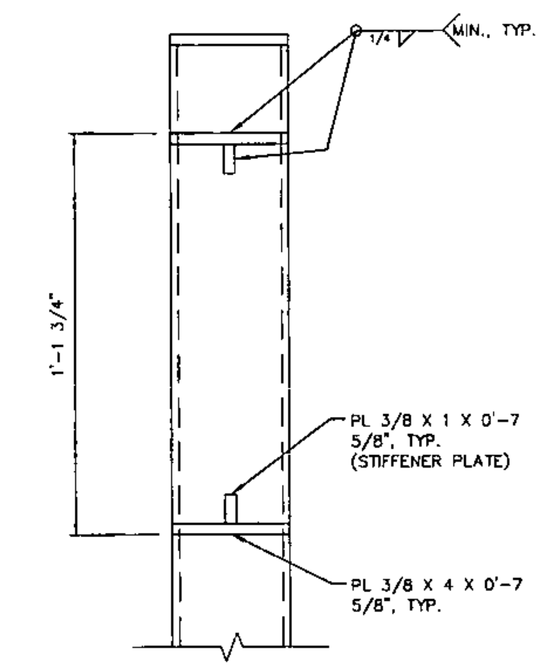

4 CONN. SECTION
3"=1'-0"

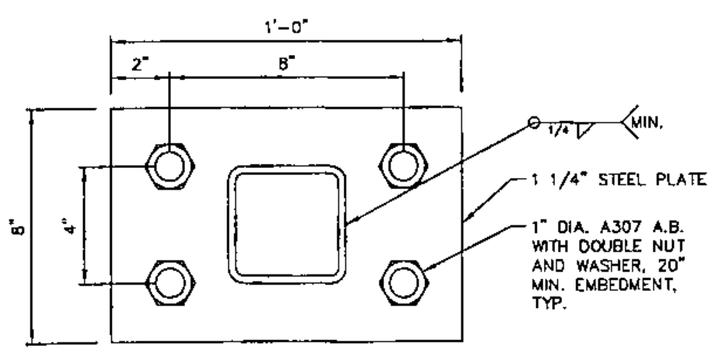

2 BASE PLATE
3"=1'-0"

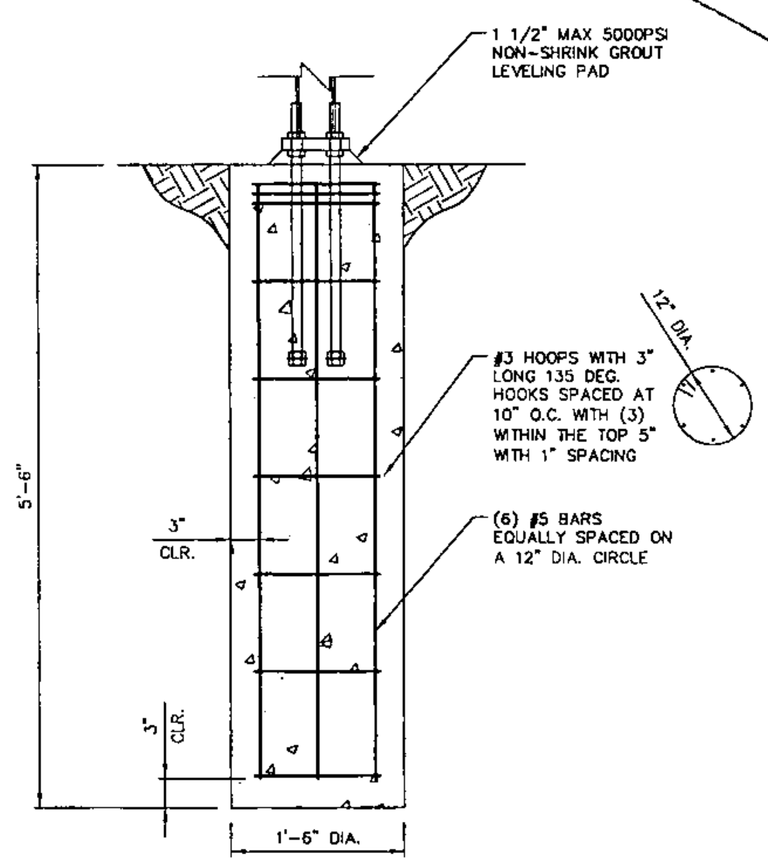

3 FOOTING DETAILS
1"=1'-0"

REGISTERED PROFESSIONAL ENGINEER
ERIC R. WATSON
No. C058302
Exp 6/30/12
CIVIL
STATE OF CALIFORNIA
6-29-11

CITY OF SAN JOSE
BUILDING DIVISION
B.P.#
DATE

COPYRIGHT 2011
Miller Consulting Engineers,Inc.

MILLER
CONSULTING
ENGINEERS
9570 SW Barbur Blvd.
Suite One Hundred
Portland, OR 97219-5412
Phone (503) 246-1250
Fax (503) 246-1395

TACO BELL SIGNAGE
CUMMING RESOURCES LLC
840 S. BASCOM AVE.
SAN JOSE, CA

SHEET CONTENT
ENTRY PORTAL
HWL

JOB No. 110492
DRAWN CJM
CHECKED EWW
DATE 06-28-11
REVISIONS

SHEET
S5.0

NOTES:
1. SEE S0.1 FOR STRUCTURAL NOTES.
2. ALL FRAMING IS PREMANUFACTURED OFF SITE.
3. SEE MANUFACTURER SHOP DRAWINGS FOR FINISHES AND INSTALLATION INSTRUCTIONS.

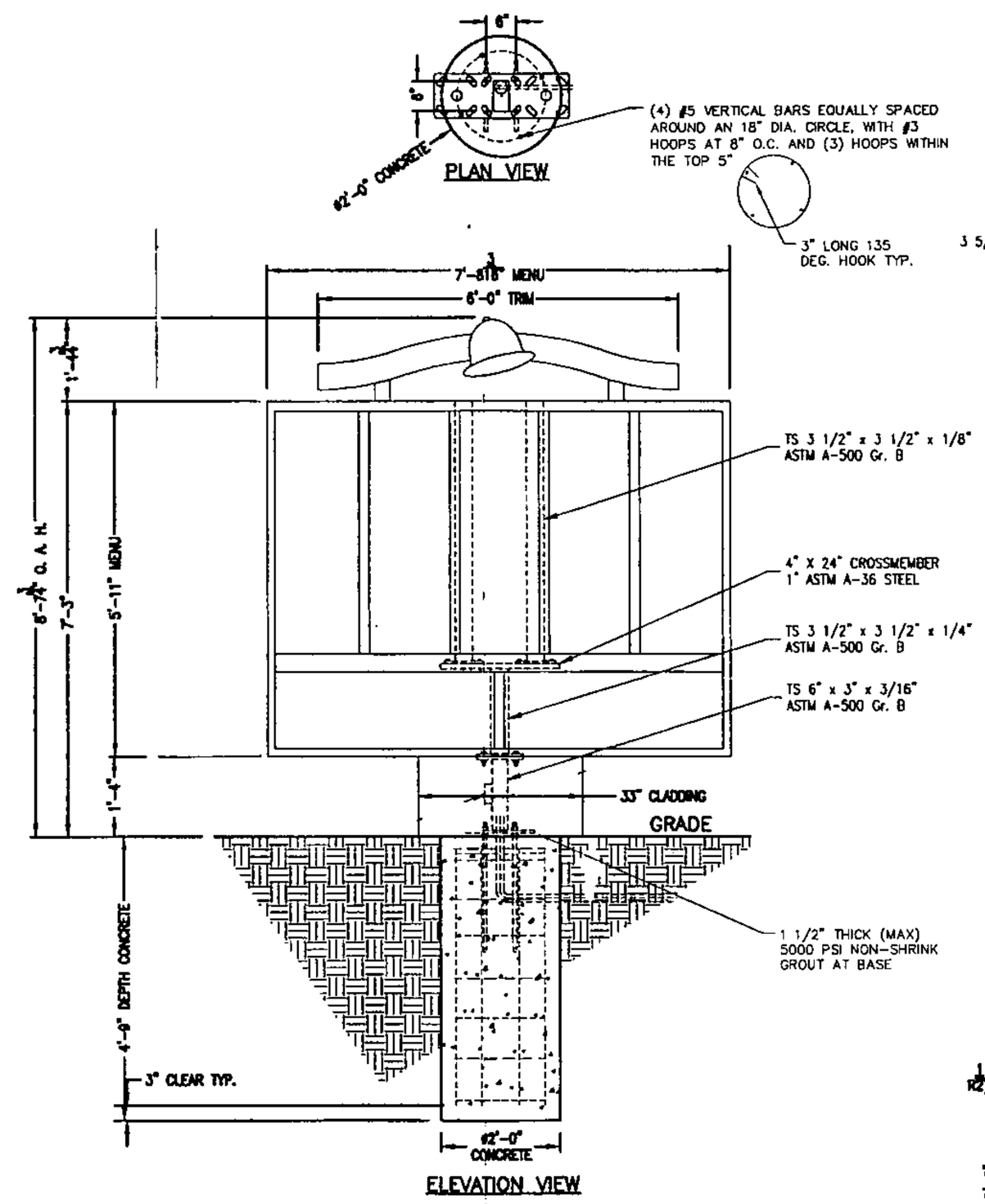

1 MENU BOARD ELEVATION
N.T.S.

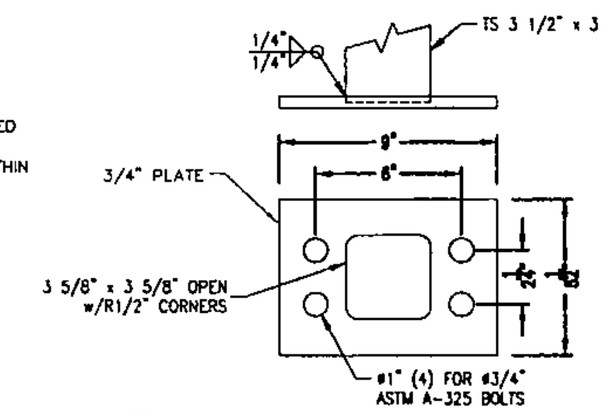

2 MOUNT PLATE DETAIL
N.T.S.

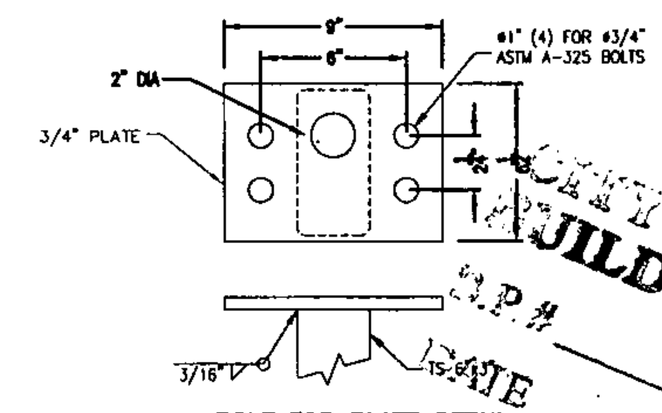

POLE TOP PLATE DETAIL
3/4" ASTM A-36 STEEL

3 POLE TOP PLATE DETAIL
N.T.S.

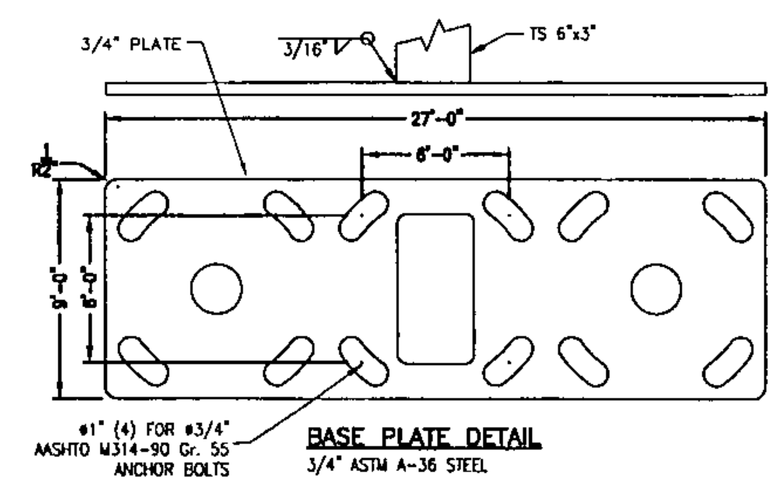

BASE PLATE DETAIL
3/4" ASTM A-36 STEEL

4 BASE PLATE DETAIL
N.T.S.

REGISTERED PROFESSIONAL ENGINEER
ERIC R. WATSON
No. C058302
Exp 6/30/12
CIVIL
STATE OF CALIFORNIA
6-29-11

CITY OF SAN JOSE
BUILDING DIVISION
S.P.#
DATE

COPYRIGHT 2011
Miller Consulting Engineers,Inc.

MILLER
CONSULTING
ENGINEERS

9570 SW Barbur Blvd.
Suite One Hundred
Portland, OR 97219-5412
Phone (503) 246-1250
Fax (503) 246-1395

TACO BELL SIGNAGE
CUMMING RESOURCES LLC
840 S. BASCOM AVE.
SAN JOSE, CA

SHEET CONTENT
MENU BOARD

JOB No. 110492
DRAWN CJM
CHECKED
DATE 06-28-11
REVISIONS

SHEET
S6.0

THIS IS AN ORIGINAL COPYRIGHT PROTECTED UNPUBLISHED DRAWING CREATED FOR YOUR PERSONAL USE IN CONNECTION WITH A PROJECT PLANNED FOR YOU BY CUMMINGS SIGNS. IT IS NOT TO BE SHOWN OUTSIDE YOUR ORGANIZATION NOR USED, REPRODUCED, COPIED, OR EXHIBITED IN ANY FASHION UNLESS AUTHORIZED IN WRITING BY AN OFFICER OF CUMMINGS SIGNS.

APPLY CLEAR TAPE AT EACH RIB TO PROTECT SCREEN FINISH

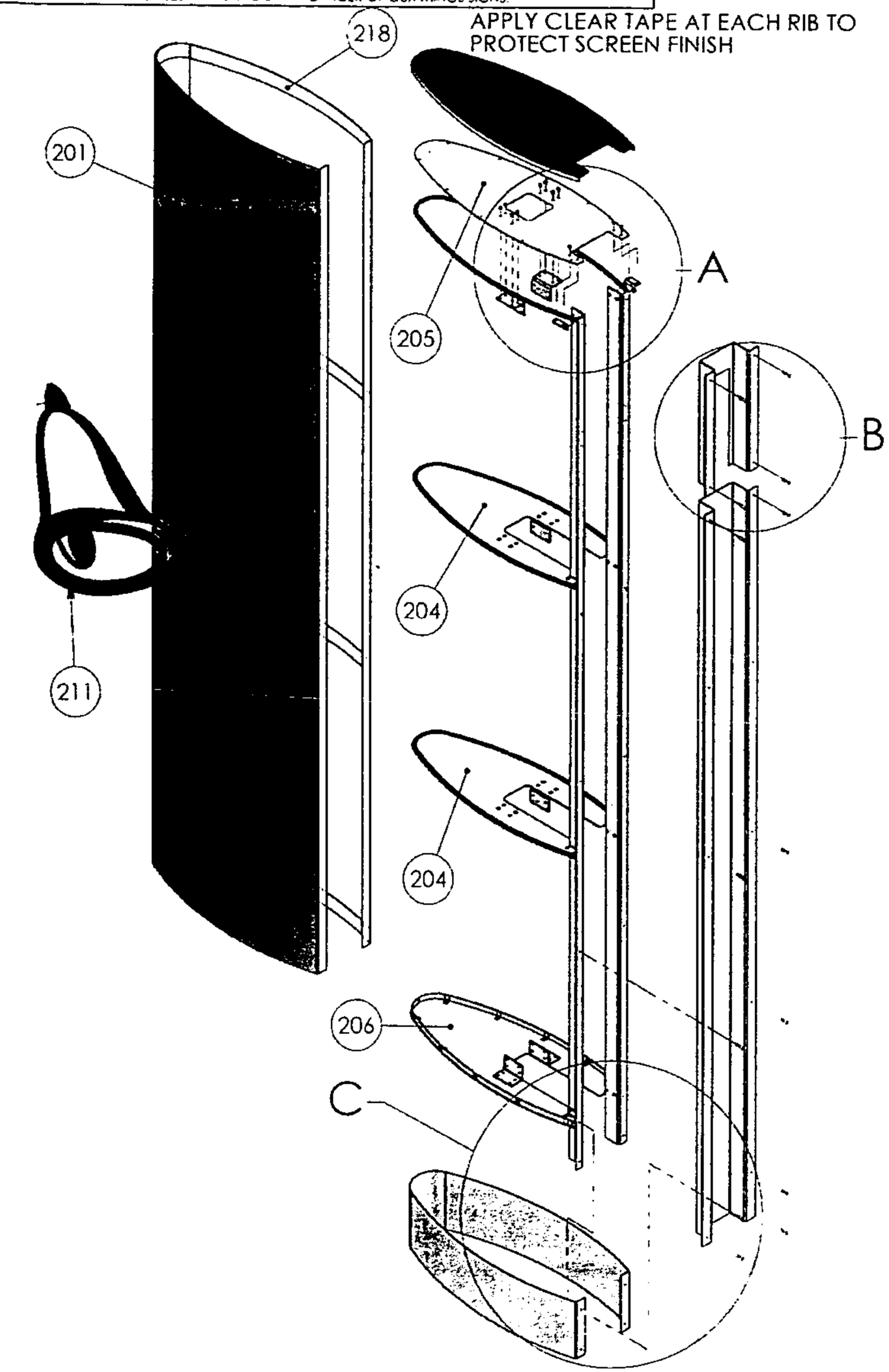

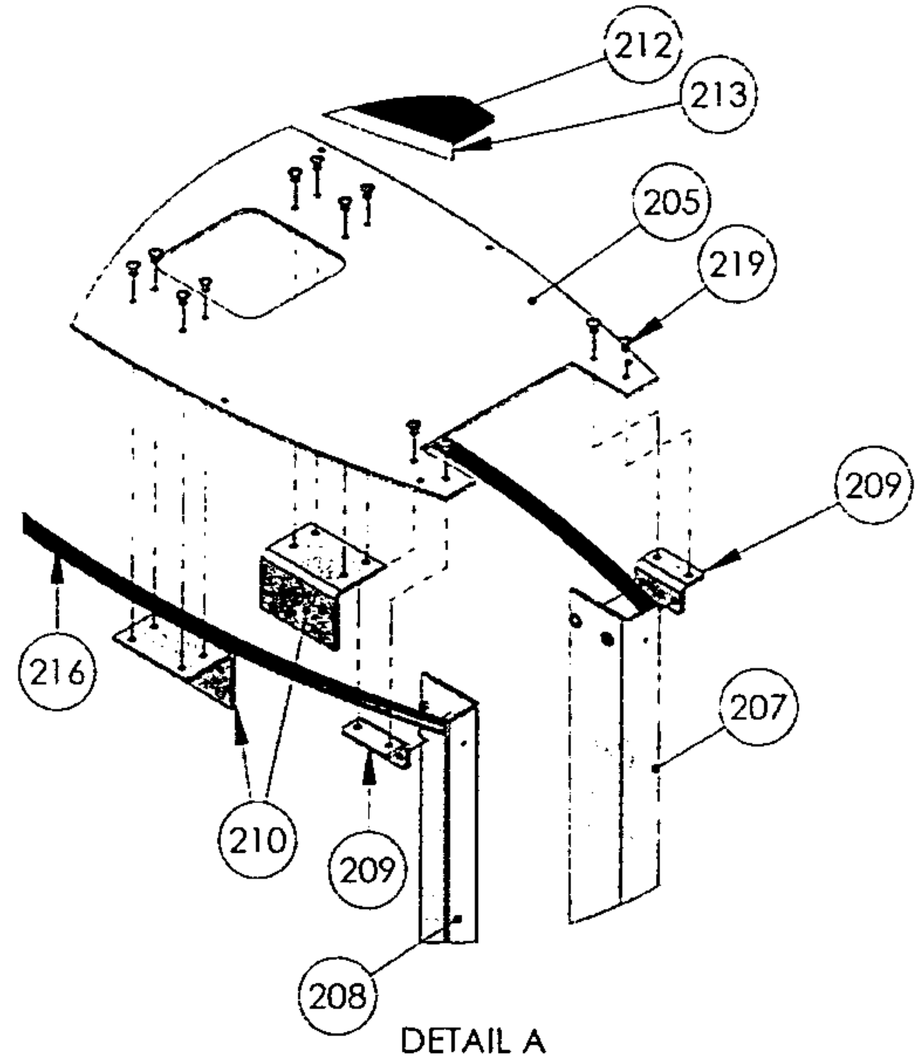

DETAIL A
SCALE 1 : 6

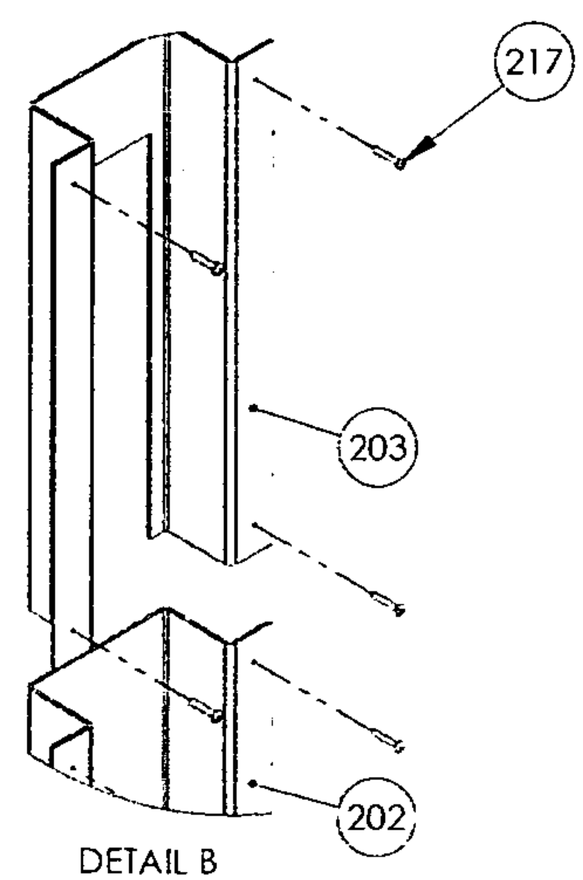

DETAIL B
SCALE 1 : 6

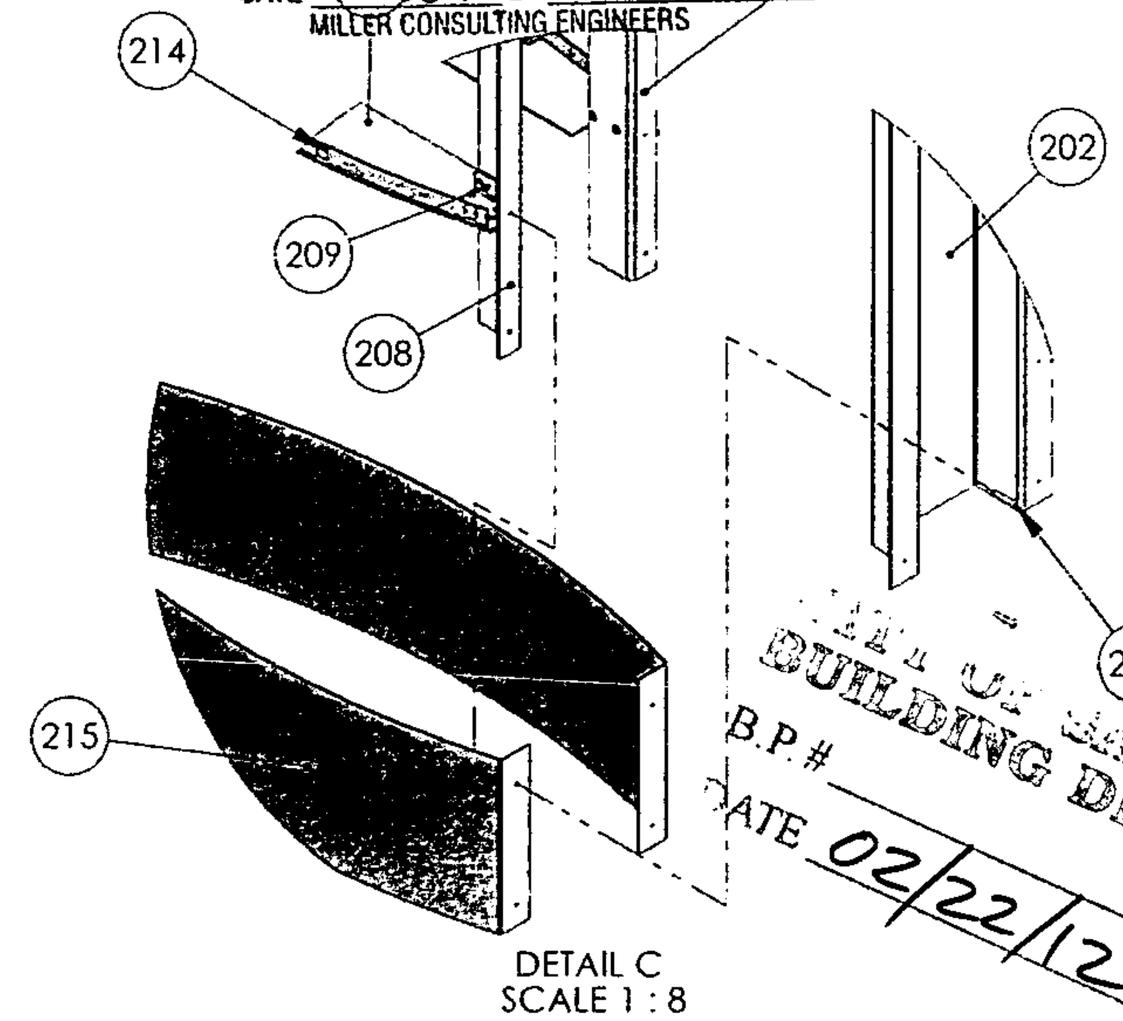

DETAIL C
SCALE 1 : 8

REVISIONS

ECR	REV	DESCRIPTION	DATE	BY

This review is only for general conformance with the design concept of the project and with the information given in the contract documents.

☒ NO EXCEPTION TAKEN ☐ REVISE & RESUBMIT

☐ MAKE CORRECTIONS NOTED ☐ SUBMIT SPECIFIED ITEM

Checking does not relieve the contractor of the responsibility for errors and omissions in the submittal or for fabrication, installation or safety methods, verification of dimensions and quantities, or the coordination with other aspects of the work.

DATE 08-02-14 BY CJM
MILLER CONSULTING ENGINEERS

CITY OF SAN JOSE
BUILDING DIVISION
B.P.#
DATE 02/22/12 VC

NOTES: 840 S. BASCOM AVE

CUMMINGS SIGNS.
4255 NAPIER FIELD
PORTLAND, OR 97062
PHONE 503 293-9000
FAX 503 293-9119

CUSTOMER: TACO BELL				TB208503
CODE	PAGE LAYOUT: CLADDING BODY ASSEMBLY			
ITEM DESCRIPTION: 10'-0" x 2'-6" ASSET EVOLUTION ENTRY PORTAL WITH 9'-0" SWING ARM				
DRAWING APPROVED / BY	LOCATION		DRAWN BY: J. WATSON	
PROGRAM APPROVED / BY				
PROTOTYPE / BY	SCALE: 1:24	PROJECT MGR: JEFF WELLS	ACCOUNT REPRESENTATIVE	
TYPE PLAN / BY	SHEET: 3 OF 9	ECN NUMBER	ITEM NUMBER: TB208503	REV: -
PRODUCTION / BY	WHOLE LOAD WEIGHT	ESTIMATED WEIGHT LBS: 340		

PC #11-025250

THIS IS AN ORIGINAL COPYRIGHT PROTECTED UNPUBLISHED DRAWING CREATED FOR YOUR PERSONAL USE IN CONNECTION WITH A PROJECT PLANNED FOR YOU BY CUMMINGS SIGNS. IT IS NOT TO BE SHOWN OUTSIDE YOUR ORGANIZATION NOR USED, REPRODUCED, COPIED, OR EXHIBITED IN ANY FASHION UNLESS AUTHORIZED IN WRITING BY AN OFFICER OF CUMMINGS SIGNS.

REVISIONS

ECR	REV	DESCRIPTION	DATE	BY

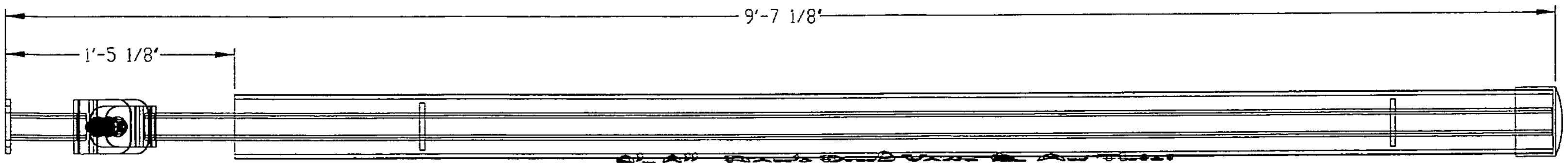

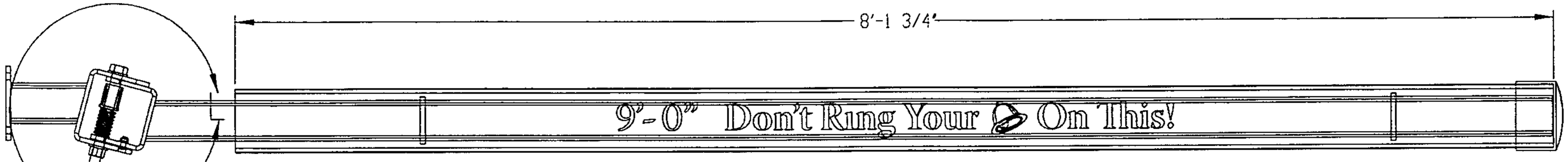

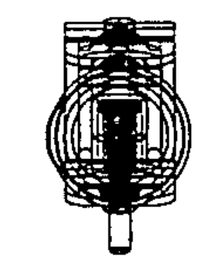

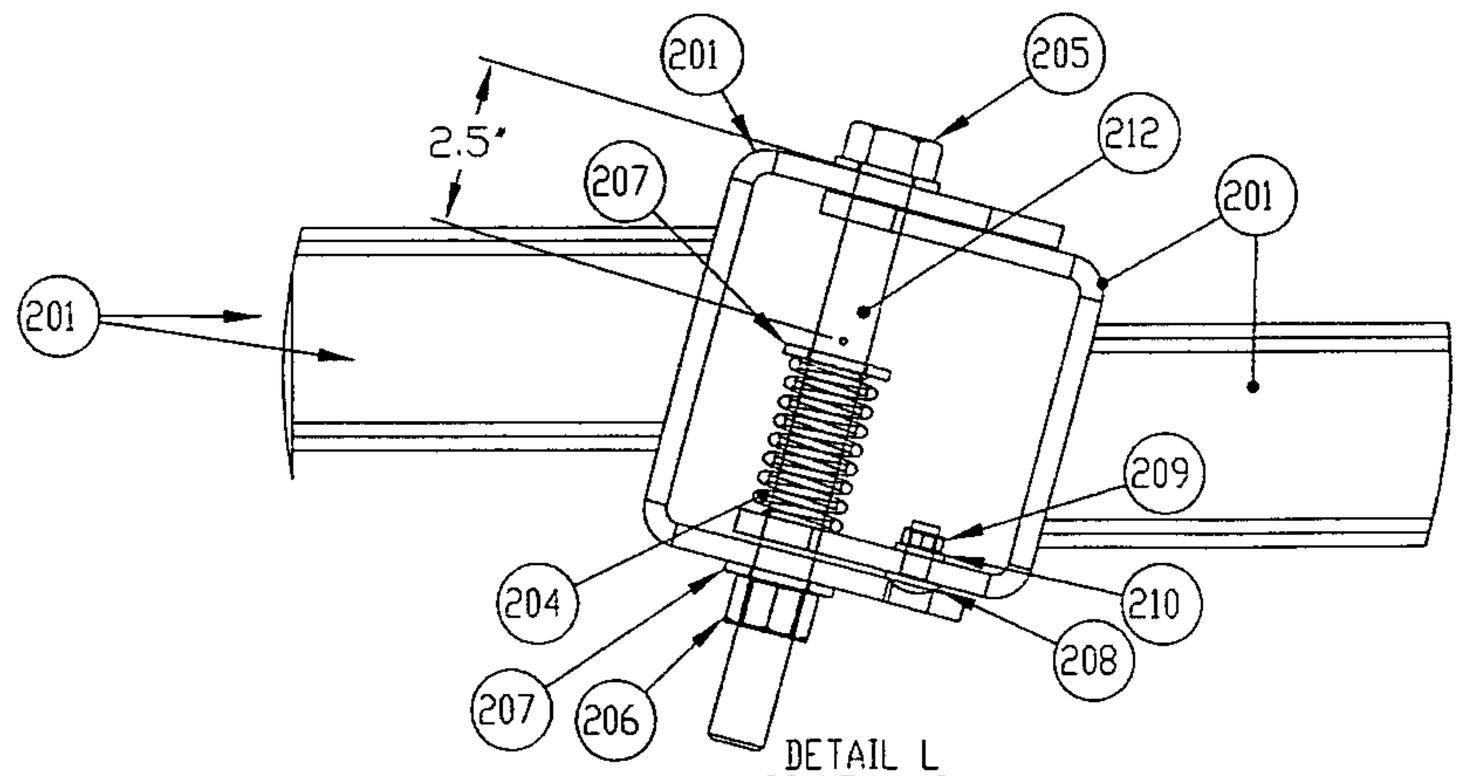

DETAIL L
SCALE 1 : 3

This review is only for general conformance with the design concept of the project and with the information given in the contract documents.

☒ NO EXCEPTION TAKEN ☐ REVISE & RESUBMIT

☐ MAKE CORRECTIONS NOTED ☐ SUBMIT SPECIFIED ITEM

Checking does not relieve the contractor of the responsibility for errors and omissions in the submittal or for fabrication, installation or safety methods, verification of dimensions and quantities, or the coordination with other aspects of the work.

DATE 08-02-11 BY CJM
MILLER CONSULTING ENGINEERS

ITEM NO.	DESCRIPTION	LENGTH	Default/QTY.
201	S-A Steel Assembly		1
202	PVC Pipe	8'-1 3/4"	1
203	PVC Pipe End Cap		1
204	Spring		1
205	BOLT 0.7500-10 x 8		1
206	HNUT 0.7500-10-B-N		1
207	Lock Washer 0.75		3
208	RHBOLT 0.375-16x0.75x0.75-N		1
209	HJNUT 0.3750-16-D-N		1
210	Lock Washer 0.375		1
211	Vinyl (5 Color Assembly)		1
212	1" Steel Pipe	1 5/8"	1

NOTES:

CUMMINGS SIGNS.
4255 NAPIER FIELD RD
DOTHAN, AL 36303
PHONE: (334) 983-8000
FAX: (334) 983-1379

CUSTOMER	TACO BELL		
CODE	PAGE LAYOUT	SWING ARM ASSEMBLY	
ITEM DESCRIPTION	10'-0" x 2'-6" ASSET EVOLUTION ENRTY PORTAL WITH 9'-0" SWING ARM		
DRAWING APPROVED / BY	LOCATION		DRAWN BY J. WATSON
PROGRAM APPROVED / BY			ACCOUNT REPRESENTATIVE
RELEASED FOR: PROTOTYPE / BY	SCALE 1:16	ENGINEER JEFF WELLS	
1st RUN / BY	SHEET 5 OF 9	BOXED SQ FT	ITEM NUMBER TB208505
PRODUCTION / BY	WIND LOAD (MPH)	EST WEIGHT (LBS) 340	REV -

ITEM NUMBER TB208505

THIS IS AN ORIGINAL COPYRIGHT PROTECTED UNPUBLISHED DRAWING CREATED FOR YOUR PERSONAL USE IN CONNECTION WITH A PROJECT PLANNED FOR YOU BY CUMMINGS SIGNS. IT IS NOT TO BE SHOWN OUTSIDE YOUR ORGANIZATION NOR USED, REPRODUCED, COPIED, OR EXHIBITED IN ANY FASHION UNLESS AUTHORIZED IN WRITING BY AN OFFICER OF CUMMINGS SIGNS.

REVISIONS				
ECR	REV	DESCRIPTION	DATE	BY

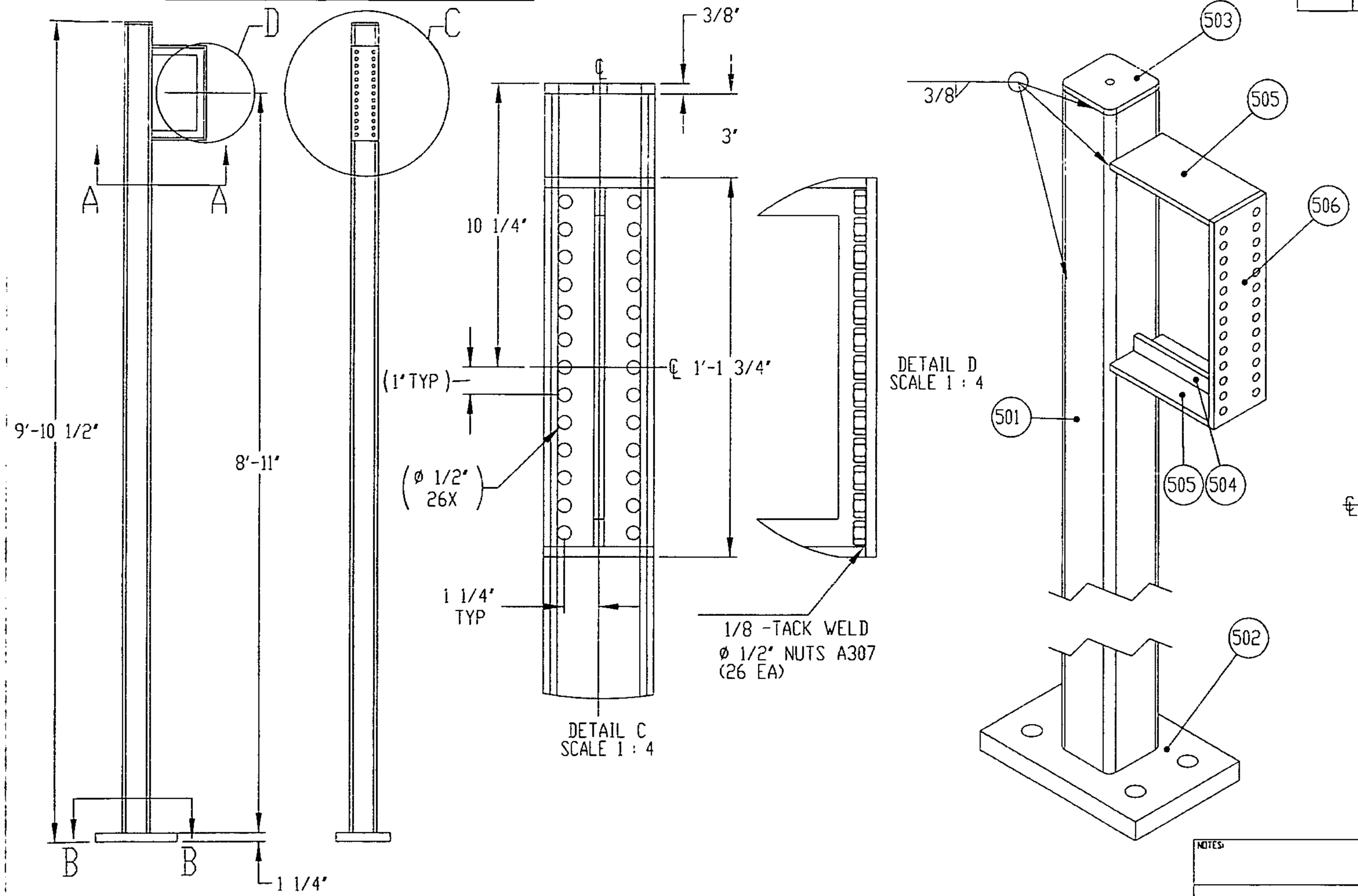

This review is only for general conformance with the design concept of the project and with the information given in the contract documents.

☒ NO EXCEPTION TAKEN ☐ REVISE & RESUBMIT

☐ MAKE CORRECTIONS NOTED ☐ SUBMIT SPECIFIED ITEM

Checking does not relieve the contractor of the responsibility for errors and omissions in the submittal or for fabrication, installation or safety methods, verification of dimensions and quantities, or the coordination with other aspects of the work.

DATE 08-02-11 BY CJM
MILLER CONSULTING ENGINEERS

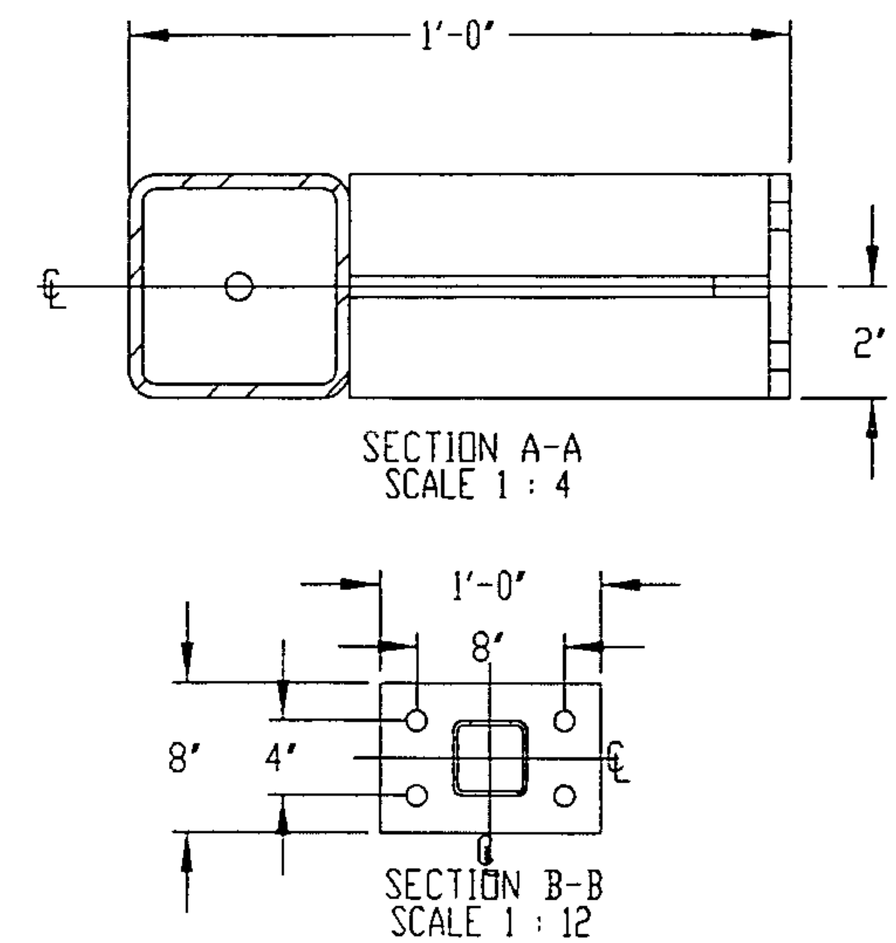

ITEM NO.	Raw material Number	OPTIMATION PART NO.	Description	LENGTH	QUANTITY
501	SW212500		TS4x4x0.25	9'-8 7/8"	1
502	SR125000	TB208501.MPG	1 1/4" Steel Plate		1
503	SR037500	TB208502.MPG	3/8" Steel Plate		1
504	SR037500	TB208503.MPG	3/8" Steel Plate		1
505	SR037500	TB208504.MPG	3/8" Steel Plate		2
506	SR037500	TB208505.MPG	3/8" Steel Plate		1

NOTES:

CUMMINGS SIGNS.
4255 NAPIER FIELD RD
DOTHAN, AL 36303
PHONE: (334) 982-8000
FAX: (334) 983-1379

CUSTOMER: TACO BELL				ITEM NUMBER: TB208506
CODE	PAGE LAYOUT: STEEL ASSEMBLY			
ITEM DESCRIPTION: 10'-0" x 2'-6" ASSET EVOLUTION ENRTY PORTAL WITH 9'-0" SWING ARM				
DRAWING APPROVED / BY	LOCATION		DRAWN BY: J. WATSON	
PROGRAM APPROVED / BY			ACCOUNT REPRESENTATIVE	
RELEASED FOR: PROTOTYPE / BY	SCALE: 1:24	ENGINEER: JEFF WELLS		
1st RUN / BY	SHEET: 6 OF 9	BOXED SQ FT	ITEM NUMBER: TB208506	REV: -
PRODUCTION / BY	WIND LOAD (MPH)	EST WEIGHT (LBS): 340		

THIS IS AN ORIGINAL COPYRIGHT PROTECTED UNPUBLISHED DRAWING CREATED FOR YOUR PERSONAL USE IN CONNECTION WITH A PROJECT PLANNED FOR YOU BY CUMMINGS SIGNS. IT IS NOT TO BE SHOWN OUTSIDE YOUR ORGANIZATION NOR USED, REPRODUCED, COPIED, OR EXHIBITED IN ANY FASHION UNLESS AUTHORIZED IN WRITING BY AN OFFICER OF CUMMINGS SIGNS.

REVISIONS				
ECR	REV	DESCRIPTION	DATE	BY

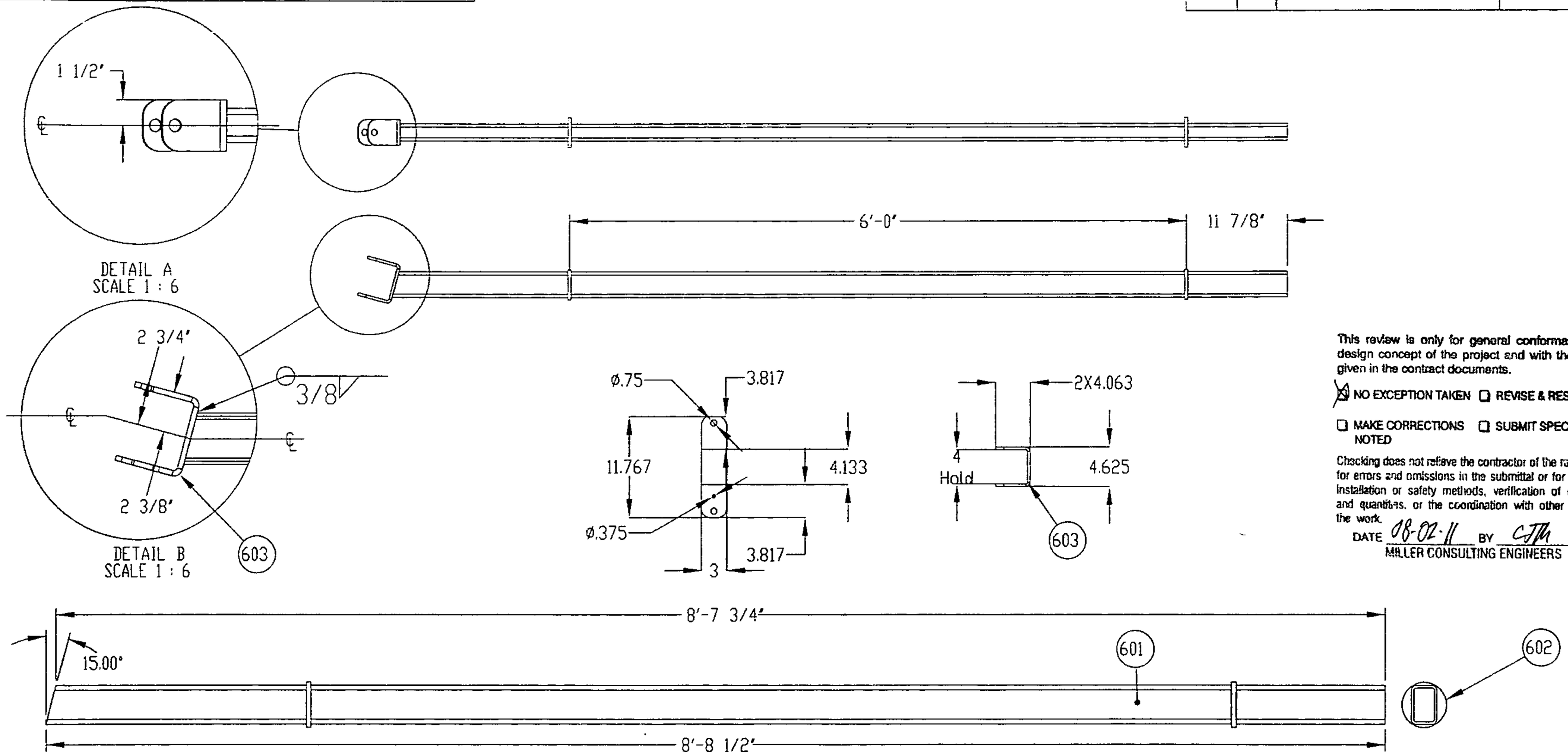

This review is only for general conformance with the design concept of the project and with the information given in the contract documents.

☒ NO EXCEPTION TAKEN ☐ REVISE & RESUBMIT

☐ MAKE CORRECTIONS NOTED ☐ SUBMIT SPECIFIED ITEM

Checking does not relieve the contractor of the responsibility for errors and omissions in the submittal or for fabrication, installation or safety methods, verification of dimensions and quantities, or the coordination with other aspects of the work.

DATE 08-02-11 BY CJM

MILLER CONSULTING ENGINEERS

ITEM NO.	RAW MATERIAL NO.	OPTIMATION PART NO.	Description	LENGTH	QUANTITY
601	ST025100	-	TR3x2x0.1875	8'-8 1/2"	1
602	SR031200	TB208506.MPG	5/16" Steel Plate		2
603	SR031200	TB208507.MPG	5/16" Steel Plate		1

NOTES:

CUMMINGS SIGNS.
4255 NAPIER FIELD RD
DOTHAN, AL 36303
PHONE: (334) 983-8000
FAX: (334) 983-1379

CUSTOMER: TACO BELL				ITEM NUMBER: TB208507
CODE	PAGE LAYOUT: STEEL ASSEMBLY			
ITEM DESCRIPTION: SWING ARM STEEL ASEMBLY				
DRAWING APPROVED	BY	LOCATION		DRAWN BY: J. WATSON
PROGRAM APPROVED	BY			ACCOUNT REPRESENTATIVE
RELEASED FOR: PROTOTYPE	BY	SCALE: 1:12	ENGINEER: JEFF WELLS	
1st RUN	BY	SHEET: 7 OF 9	BOXED SQ FT	ITEM NUMBER: TB208507 — REV: -
PRODUCTION	BY	WIND LOAD (MPH)	EST WEIGHT (LBS): 340	

THIS IS AN ORIGINAL COPYRIGHT PROTECTED UNPUBLISHED DRAWING CREATED FOR YOUR PERSONAL USE IN CONNECTION WITH A PROJECT PLANNED FOR YOU BY CUMMINGS SIGNS. IT IS NOT TO BE SHOWN OUTSIDE YOUR ORGANIZATION NOR USED, REPRODUCED, COPIED, OR EXHIBITED IN ANY FASHION UNLESS AUTHORIZED IN WRITING BY AN OFFICER OF CUMMINGS SIGNS.

REVISIONS				
ECR	REV	DESCRIPTION	DATE	BY

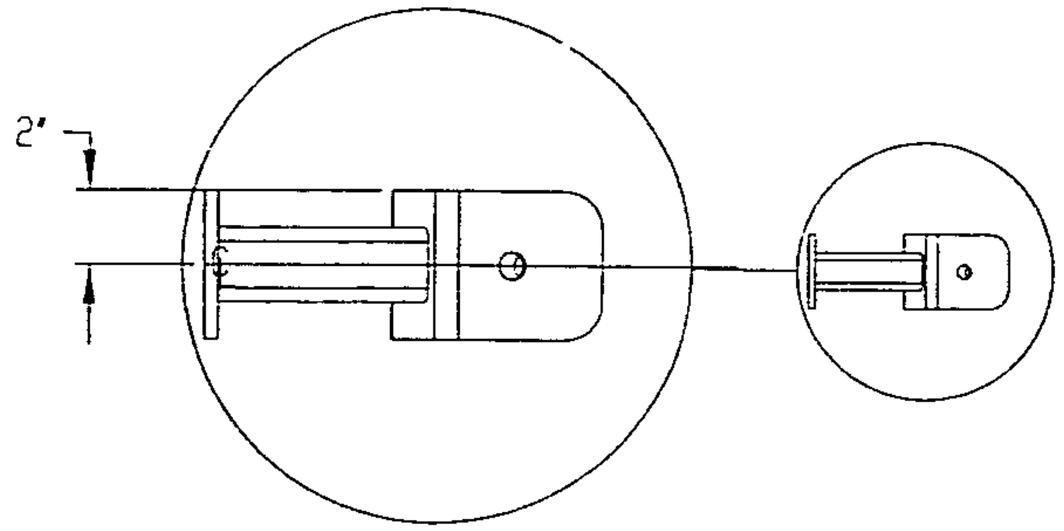

DETAIL A
SCALE 1 : 6

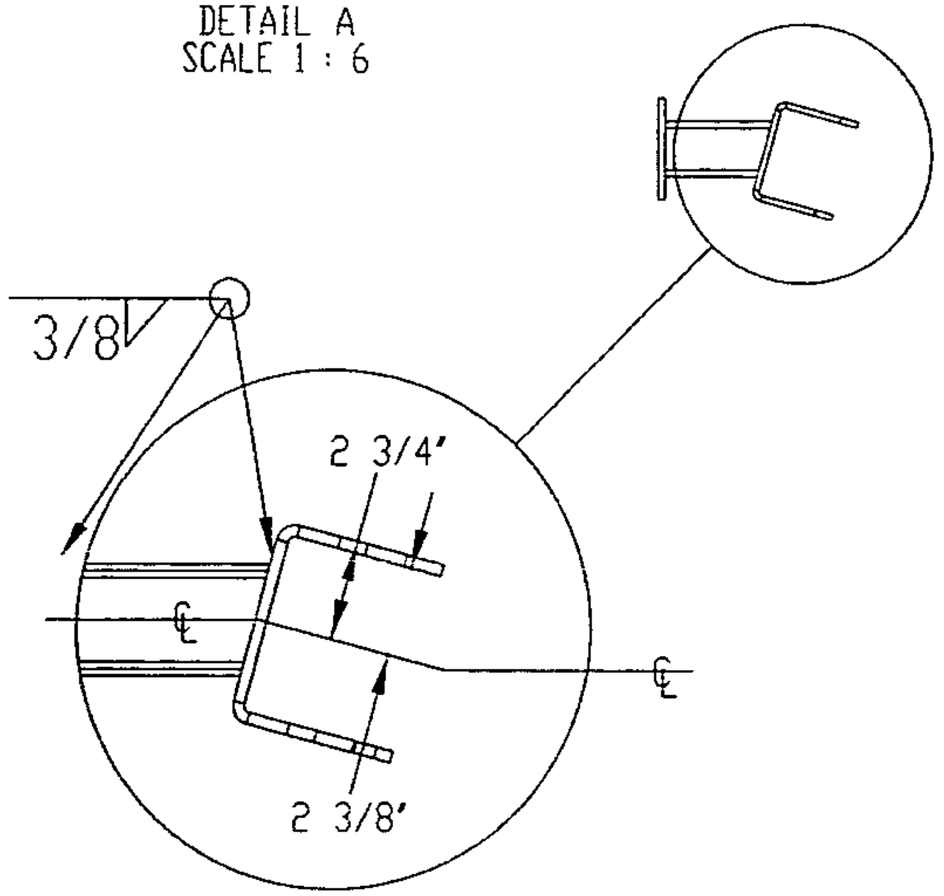

DETAIL B
SCALE 1 : 6

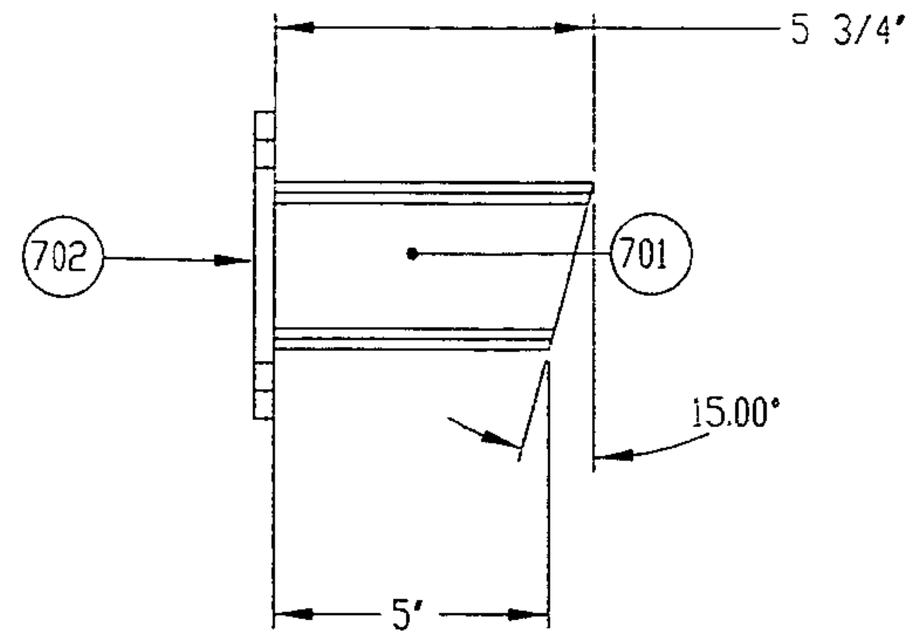

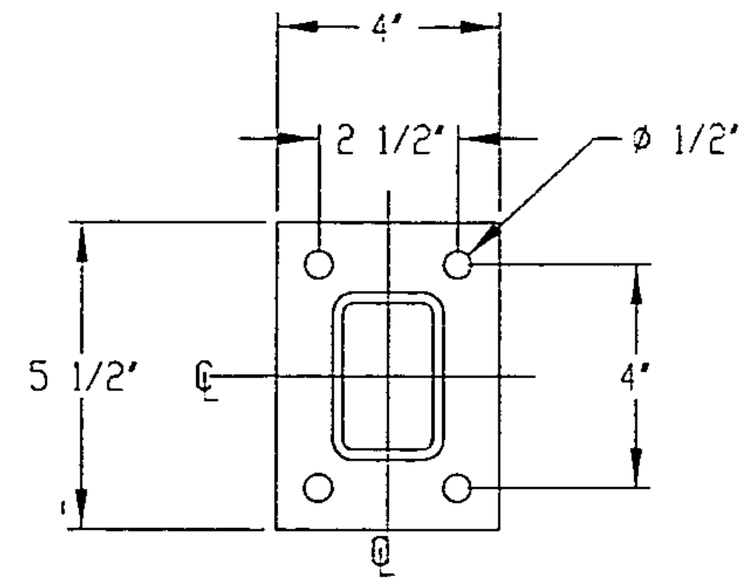

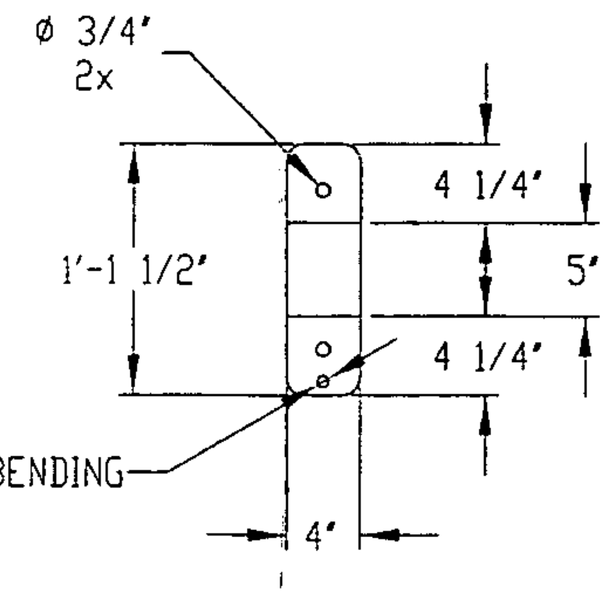

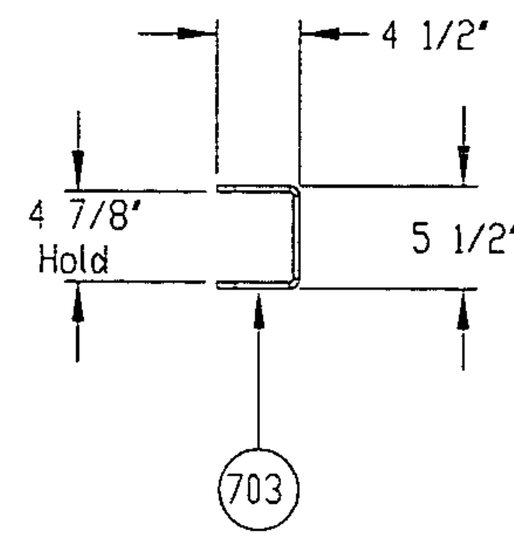

This review is only for general conformance with the design concept of the project and with the information given in the contract documents.

☒ NO EXCEPTION TAKEN ☐ REVISE & RESUBMIT

☐ MAKE CORRECTIONS NOTED ☐ SUBMIT SPECIFIED ITEM

Checking does not relieve the contractor of the responsibility for errors and omissions in the submittal or for fabrication, installation or safety methods, verification of dimensions and quantities, or the coordination with other aspects of the work.

DATE 08-02-11 BY CJM
MILLER CONSULTING ENGINEERS

ITEM NO.	RAW MATERIAL NO.	OPTIMATION PART NO.	Description	LENGTH	QUANTITY
701	ST025100		TR3x2x0.125	5 3/4"	1
702	SR037500	TB208508.MPG	3/8" Steel Plate		1
703	SR031200	TB208509.MPG	5/16" Steel Plate		1

NOTES:

CUMMINGS SIGNS.
4255 NAPIER FIELD RD
DOTHAN, AL 36303
PHONE: (334) 983-8000
FAX: (334) 983-1379

DRAWING APPROVED	BY		
PROGRAM APPROVED	BY		
RELEASED FOR: PROTOTYPE	BY		
1st RUN	BY		
PRODUCTION	BY		

CUSTOMER: TACO BELL			
CODE	PAGE LAYOUT: STEEL ASSEMBLY		
ITEM DESCRIPTION: SWING ARM STEEL ASEMBLY			
LOCATION			DRAWN BY: J. WATSON
SCALE: 1:12	ENGINEER: JEFF WELLS		ACCOUNT REPRESENTATIVE
SHEET: 8 OF 9	BOXED SQ FT	ITEM NUMBER: TB208508	REV: -
WIND LOAD (MPH)	EST WEIGHT (LBS): 340		

ITEM NUMBER: TB208508