Taco Bell
REMODEL

TACO BELL™

MIDTERM
MODERN EXPLORER
2770 ALUM ROCK AVENUE
SAN JOSE, CA 95127
STORE # 024525

W:\Data\Tambro\1856_Tambro_SanJose_AlumRock_024525\03_cd_current\000_1856_T1-0.dwg By: ARCHASSOCIATED1 Saved on:8/12/2019 4:05:36 PM

ALL IDEAS, DESIGNS, ARRANGEMENTS AND PLANS INDICATED BY OR DISCLOSED IN THIS DRAWING ARE OWNED BY, AND THE PROPERTY OF THIS OFFICE AND WERE CREATED, PROVIDED AND DEVELOPED FOR USE ON, AND IN CONNECTION WITH, THE SPECIFIED PROJECT. NONE OF SUCH IDEAS, DESIGNS, ARRANGEMENTS AND PLANS SHALL BE USED BY OR DISCLOSED TO ANY PERSON, FIRM OR CORPORATION FOR ANY PURPOSE WHATSOEVER WITHOUT THE WRITTEN PERMISSION OF PROJECT ARCHITECT.

CONTRACTORS SHALL VERIFY AND BE RESPONSIBLE FOR ALL DIMENSIONS AND CONDITIONS ON THE JOB AND THE OFFICE MUST BE NOTIFIED OF ANY VARIATION THEREFROM BEFORE PROCEEDING WITH FABRICATION ON ITEMS SO NOTED.

WRITTEN DIMENSIONS ON THESE DRAWINGS SHALL HAVE PRECEDENCE OVER SCALE DIMENSIONS. CONTRACTORS SHALL VERIFY AND BE RESPONSIBLE FOR ALL DIMENSIONS AND CONDITIONS ON THE JOB AND THE OFFICE MUST BE NOTIFIED OF ANY VARIATION THEREFROM BEFORE PROCEEDING WITH FABRICATION ON ITEMS SO NOTED.

THIS PROJECT INVOLVES THE REMODEL OF AN EXISTING QUICK SERVE DRIVE-THRU (TACO BELL) RESTAURANT. THE BUILDING EXTERIOR WILL BE PAINTED TO ENHANCE THE BUILDING ENTRANCES AND DRIVE-THRU.

EXTERIOR:
PAINT EXTERIOR NEW COLORS.
NEW EXTERIOR WALL SCONCES.
NO CHANGE IN NUMBER OF PARKING SPACES. PARKING LOT A0-1 SPACE CORRECTED.
REPLACE (N) ORDER POINT CANOPY.
1 (N) ENTRY PORTAL

INTERIOR:
UPDATE RESTROOMS TO CURRENT ADA REQUIREMENTS.
NEW SEATING, NO INCREASE IN THE NUMBER OF SEATS.
NEW WALL TILES AND PAINT IN DINING AND RESTROOMS
NEW FLOOR TILE.
REPLACE EXISTING CEILING AND ADD LED LIGHTING.
1 NEW INTERIOR DIGITAL MENU BOARDS.
NEW FRONT SERVICE COUNTER.
NEW MOP SINK.

ANY MODIFICATIONS, REPLACEMENT OR RELOCATION TO THE COMMERCIAL COOKING EQUIPMENT REQUIRES SEPARATE PLANS AND PERMITS FOR SAID MODIFICATIONS.

SCOPE OF WORK — H

ADDRESS:	2770 ALUM ROCK AVE, SAN JOSE, CA 95127
BUILDING CODES:	2016 CALIFORNIA BUILDING CODE
	2016 CALIFORNIA PLUMBING CODE
	2016 CALIFORNIA MECHANICAL CODE
	2016 CALIFORNIA ELECTRICAL CODE
	2016 CALIFORNIA EXISTING BUILDING CODE
	2016 INTERNATIONAL EXISTING BUILDING CODE
	2016 CALIFORNIA BUILDING ENERGY EFFICIENCY STANDARDS
CONSTRUCTION TYPE:	MAIN BUILDING: VB NON-SPRINKLERED TRASH ENCLOSURE: VB NON-SPRINKLERED
OCCUPANCY:	"A2" CONSTRUCTION
SEATING:	EXISTING 74 SEATS PROPOSED 76 SEATS
ZONING:	CN ZONE gENERAL PLAN CR29 - URBAN VILLAGE
STORIES:	SINGLE
MAXIMUM HEIGHT.:	23' - 0"
BUILDING AREA:	2,590 S.F. +/-
PARKING:	38 PARKING STALLS - NO CHANGE IN NUMBER OF PARKING STALLS (2 ADA PARKING STALLS)
EXISTING SITE AND BUILDING INFORMATION	
APN. # 484-20-037	
SITE AREA (NET) - 31,798 SQ. FT. (0.73 AC.)	
GROSS BLDG. AREA - 2,590 SQ. FT.	
TOTAL AREA COVERED BY STRUCTURE AS A % OF NET PARCEL AREA - 8.24%	
LANDSCAPE AREA - 3,818 SQ. FT.	
PARKING STALLS - 38 TOTAL (NO CHANGE TO NUMBER OF PARKING STALLS)	
FLOOD ZONE DESIGNATION - "X" - NO ACTION REQUIRED	
NO ADDITIONAL BUILDING AREA PROPOSED.	

PROJECT SUMMARY — D

TITLE / ADA / ENERGY / SURVEY

	1	2	3
T1.0 TITLE SHEET			
ADA-1 DISABLED ACCESSIBILITY GENERAL NOTES			
ADA-2 DISABLED ACCESSIBILITY EXTERIOR DETAILS			
ADA-3 DISABLED ACCESSIBILITY INTERIOR DETAILS			
DEMO			
D1.0 DEMOLITION FLOOR PLAN			
D2.0 DEMO RCP			
D3.0 DEMOLITION ELEVATIONS			
ARCHITECTURAL			
A0.0 SITE PLAN	•		
A0.1 SITE PLAN DETAILS	•		
A1.0 FLOOR PLAN	•		
A1.1 OCCUPANCY AND EXIT PLAN			
A2.0 SEATING PLAN / SCHEDULE	•		
A3.0 ROOF PLAN			
A4.0 EXTERIOR ELEVATIONS			
A5.0 EXTERIOR COLOR ELEVATIONS			
A6.0 CONSTRUCTION DETAILS - FINISH	•		
A6.1 CONSTRUCTION DETAILS - CEILING	•		
A7.0 FLOOR FINISH PLAN			
A7.2 FINISH SCHEDULE			
A8.0 INTERIOR ELEVATIONS - DINING ROOM			
A8.1 INTERIOR ELEVATIONS - DINING ROOM / KITCHEN			
A8.2 INTERIOR ELEVATIONS - TOILET ROOMS, ENLARGED TOILET ROOMS PLAN			
ELECTRICAL			
E0.0 TITLE 24			
E0.1 TITLE 24			
E1.0 REFLECTED CEILING PLAN	•		
E2.1 SERVICE DIAGRAMS AND SCHEDULE			
E7.0 ELECTRICAL DETAILS			
PLUMBING			
P1.0 PLUMBING PLAN	•		

SAN JOSE FIRE DEPARTMENT
Approved as submitted subject to inspection

FIRE PROTECTION SYSTEMS

Type of Inspection	Required
Overhead Installation	
Fixed Systems (Clean Agent, H.E.D.S. Spray Booth)	✓
Fire Alarm / Monitoring	
Pre-action	
FSD / Air Handler	
Others	

LIFE SAFETY SYSTEMS

Type of Inspection	Required
Panic Hardware/Occupant Load Sign	✓
Exiting & Exit Signs (including ladder signs)	✓
Stair / Elevator / Evacuation Signs	
Emergency Lighting	✓
Fire Rated Construction	✓
Street Address/ Fire Extinguisher	✓
Others	

☐ Sprinkler permit required ☑ Alarm permit required
By [signature] Date 8/13/19

REGULATOR & TYPE K

SHEET INDEX — A

SEPARATE ~~OR DEFERRED~~ PERMIT

1. REFACE (E) EXTERIOR MENUBOARD
2. REFACE (E) MONUMENT SIGN
3. REPLACEMENT OF ALL EXTERIOR SIGNAGE.
4. OCB & CLEARANCE BAR
5. CO2 Tank

DEFERRED SUBMITALS — E

STORE OWNER/OPERATOR	ARCHITECT
TAMBRO INC. 2780 ALUM ROCK AVENUE SAN JOSE, CA 95127 CONTACT: ALAN LAABS / DAN CARTER PHONE: (408) 929-2113	VMI ARCHITECTURE 637 FIFTH AVENUE SAN RAFAEL, CA 94901 CONTACT: PHILLIP MOSS, ARCHITECT PHONE: (415) 451-2500 / EMAIL: PMOSS@VMARCH.COM
PROPERTY OWNER	**GENERAL CONTRACTOR**
TAMBRO INC. 2780 ALUM ROCK AVENUE SAN JOSE, CA 95127 CONTACT: ALAN LAABS / DAN CARTER PHONE: (408) 929-2113	TBD

PROJECT DIRECTORY — F

PLANNING	HEALTH
CITY OF SAN JOSE PLANNING DEPARTMENT 200 E. SANTA CLARA STREET SAN JOSE, CA 95113 CONTACT: Phone: (408) 535-3555	SANTA CLARA COUNTY ENVIRONMENTAL HEALTH 1555 BERGER DRIVE, SUITE #300 SAN JOSE, CALIFORNIA 95112 CONTACT: Phone: (408) 918-3446
BUILDING	**FIRE**
CITY OF SAN JOSE BUILDING DEPARTMENT 200 E. SANTA CLARA STREET SAN JOSE, CA 95113 CONTACT: Phone: (408) 535-3555	CITY OF SAN JOSE FIRE DEPARTMENT 1661 SENTER ROAD SAN JOSE, CA 95112 CONTACT: TBD PHONE: (408) 794-7000

CITY CONTACTS — G

COMPLIANCE REQUIRED ALL TIMES THROUGHOUT CONSTRUCTION UNTIL RTO:

1. SEAL ALL CEILING AND WALL PENETRATION USING COVER PLATES AND FOAM AS NEEDED.
2. CONTRACTOR TO CONSTRUCT A TEMPORARY PLYWOOD DUST WALL WITH A DOOR BEHIND THE FRONT COUNTER. THIS WALL SHOULD REMAIN IN PLACE UNTIL 3 DAYS PRIOR TO RESTAURANT TURNOVER (RTO).
3. THE CONTRACTOR SHALL PROVIDE ADEQUATE SEPARATION BETWEEN THE CONSTRUCTION ZONE THE OCCUPIED AREAS, AND SHALL VERIFY THAT NECESSARY CITY INSPECTIONS FOR FIRE STRUCTURAL AND LIFE SAFETY ARE APPROVED PRIOR TO DAILY OCCUPANCY OF ANY PORTION OF THE BUILDING.
4. ONE RESTROOM SHALL REMAIN OPERATIONAL DURING CONSTRUCTION FOR EMPLOYEE USE.
5. PARKING LOT AND DRIVE THRU LANE MUST BE KEPT CLEAR OF ALL DEBRIS, NAILS, ETC.
6. STAGING AREA MUST BE KEPT TO THE REAR OF PROPERTY AND IN LIMITED AREA WHEN POSSIBLE. ALL DRIVEWAYS DRIVE AISLES AND DRIVE THRU LANE SHOULD REMAIN OPEN AND UNOBSTRUCTED AT ALL TIMES DURING CONSTRUCTION.
7. DRIVE THRU MENU BOARD AND SPEAKER MUST BE FUNCTIONAL AT ALL TIMES DURING CONSTRUCTION AS DRIVE THRU REMAINS OPEN.
8. ADJUST EXISTING IRRIGATION SYSTEM AS REQUIRED FOR PROPOSED NEW WORK. INCLUDES REMOVING AND CAPPING SPRINKLER HEADS WHERE LANDSCAPING IS NOTED AS BEING REMOVED AND REPLACED WITH PAVEMENT/ ROCKS.
9. ADJUST EXISTING LANDSCAPING IN PLANTER STRIPS AROUND BUILDING SO AS TO BE 4" LOWER THAN EXISTING PLASTER WEEP SCREEDS. NOTIFY OWNER IF THIS CAN NOT BE DONE WITHOUT MODIFYING PLANTERS.
10. CLEAN OUT AND REPAIR EXISTING ROOF AND OVERFLOW DRAINS FOR POSITIVE DRAINAGE TO DISCHARGE ONTO PAVEMENT SURFACES AWAY FROM BUILDING. PROVIDE NEW SCREENS ON ROOF.
11. CLEAN EXISTING ROOF AREAS OF ALL DEBRIS OR UNUSED EQUIPMENT. VERIFY WITH OWNER EXTENT OF UNUSED EQUIPMENT TO BE REMOVED.

SPECIFIC REMODEL PREPARATION AND STAGING NOTES — B

DETAIL CALLOUT X - DETAIL NUMBER AX.X - SHEET NUMBER	ROOM — ROOM NAME
SECTION CALLOUT X - SECTION NUMBER AX.X - SHEET NUMBER	P-X — FINISH CALLOUT
EXT. ELEVATION CALLOUT X - ELEVATION NUMBER AX.X - SHEET NUMBER	X — KEY NOTE
INT. ELEVATION CALLOUT X - ELEVATION NUMBER AX.X - SHEET NUMBER	X — WINDOW NUMBER / ARTWORK NUMBER
SHEARWALL CALLOUT X - SHEARWALL NUMBER X'-X" - SHEARWALL LENGTH	X — DOOR NUMBER
ELEVATION X'-X" - HEIGHT XXXX - DESCRIPTION	X — REVISION NUMBER
CEILING CALLOUT CL-X - CEILING TYPE X'-X" - HEIGHT	X-XXX — EQUIPMENT NUMBER
	XXX X — EQUIPMENT CALLOUT (M.E.P.) XXX - EQUIPMENT X - FIXTURE NUMBER

REFER TO STRUCTURAL, MECHANICAL, PLUMBING, AND ELECTRICAL SHEETS FOR SPECIFIC SYMBOLS.

GENERAL DRAWING SYMBOLS — J

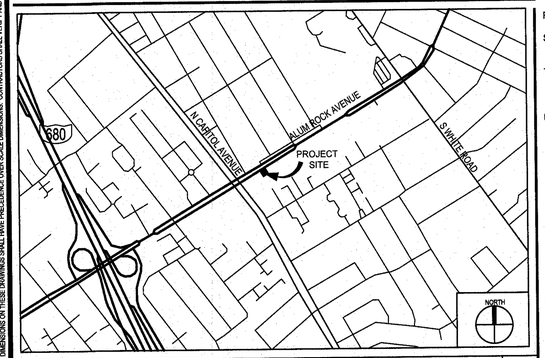

VICINITY MAP — N.T.S. — H

A. ALL WORK SHALL CONFORM TO THE 2016 EDITION OF THE CALIFORNIA BUILDING CODE, AND ALL OTHER APPLICABLE CODES, STANDARDS, AND REGULATIONS OF THE CITY OF SAN JOSE AND COUNTY OF SANTA CLARA.

B. IT IS INTENDED THAT A COMPLETE OCCUPIABLE BUILDING PROJECT IS PROVIDED.

C. THE GENERAL CONDITIONS OF THE CONTRACT FOR CONSTRUCTION (A.I.A. LATEST EDITION) ARE A PART OF THESE CONTRACT DOCUMENTS. A COPY IS ON FILE AT THE ARCHITECT'S OFFICE.

D. DUE TO THE NATURE OF THE WORK, ALL DIMENSIONS SHOWN SHALL BE CONSIDERED APPROXIMATE. CONTRACTOR SHALL FIELD VERIFY ALL DIMENSIONS PRIOR TO BEGINNING CONSTRUCTION. SHOP DRAWINGS SHALL BE SUBMITTED TO THE ARCHITECT FOR REVIEW PRIOR TO FABRICATION OF ANY ITEM. FAILURE TO ADHERE TO THIS PROCEDURE SHALL PLACE FULL RESPONSIBILITY FOR ANY ERRORS DIRECTLY UPON THE CONTRACTOR.

E. INFORMATION CONCERNING EXISTING BUILDING STRUCTURE, SIZE, LOCATION OF EQUIPMENT, FINISHES, ETC. WAS OBTAINED FROM VARIOUS PLANS FOR CONSTRUCTION OF THE EXISTING BUILDING. EVERY EFFORT HAS BEEN MADE TO ACCURATELY DEPICT EXISTING CONDITIONS, HOWEVER ALL WORK MUST BE VERIFIED IN THE FIELD PRIOR TO CONSTRUCTION. ANY CONFLICT BETWEEN THESE PLANS AND ACTUAL FIELD CONDITIONS SHALL BE REPORTED IMMEDIATELY TO THE ARCHITECT FOR VERIFICATION AND/OR CORRECTION.

F. DO NOT SCALE THESE DRAWINGS. VERIFY ALL DIMENSIONS AND CONDITIONS IN THE FIELD. ANY DISCREPANCIES IN THESE DRAWINGS SHALL BE BROUGHT TO THE ATTENTION OF THE ARCHITECT PRIOR TO STARTING WORK.

G. ALL PROPOSED SUBSTITUTIONS SHALL BE APPROVED BY THE ARCHITECT, IN WRITING, PRIOR TO INSTALLATION.

H. THE GENERAL CONTRACTOR SHALL USE EXTREME CAUTION IN DEMOLITION OF EXISTING CONSTRUCTION. ANY ITEM STRUCTURAL IN NATURE AND SCHEDULED FOR DEMOLITION IN THIS DRAWING BUT NOT IDENTIFIED AS STRUCTURAL IN NATURE SHALL BE VERIFIED WITH THE ARCHITECT PRIOR TO DEMOLITION. BY FAILURE TO DO SO, THE CONTRACTOR ASSUMES FULL RESPONSIBILITY FOR THE CONSEQUENCES OF SUCH ACTION.

I. G.C. IS RESPONSIBLE FOR SUBMITTAL, PAYING FEES AND OBTAINING ALL PERMITS ASSOCIATED WITH THE PROJECT EXCEPT GENERAL BUILDING PERMIT. THIS INCLUDES, BUT IS NOT LIMITED TO ELECTRICAL, MECHANICAL, PLUMBING, FIRE SPRINKLER, HOOD ANSUL, OR OTHER RELATED FIRE PERMITS, ENCROACHMENT PERMIT, ETC. OWNER WILL PAY FOR "CONNECTION FEES" ASSOCIATED WITH UTILITY PERMITS. G.C. REQUIRED TO PAY FOR TEMPORARY FACILITIES FEES AS REQUIRED TO COMPLETE THE WORK IN A TIMELY MANNER.

J. G.C. SHALL PROVIDE EACH SUBCONTRACTOR WITH A COMPLETE AGENCY-PERMITTED DRAWING SET AT TIME OF CONSTRUCTION.

K. THE GENERAL CONTRACTOR SHALL REMOVE EXISTING TRIM AND SURFACES AS REQUIRED TO PROVIDE A PLUMB AND TRUE SURFACE SUITABLE FOR THE APPLICATION OF NEW WALL FINISHES.

L. ALL ABBREVIATIONS INCLUDED FOLLOW INDUSTRY STANDARDS. CONTACT ARCHITECT IF ANY ABBREVIATIONS ARE NOT CLEAR.

M. THE CONTRACTOR SHALL SHORE AND/OR UNDERPIN EXISTING WORK AS REQUIRED TO SAFELY INSTALL NEW WORK. THIS WORK SHALL BE THE FULL RESPONSIBILITY OF THE CONTRACTOR AND NO ACT, DIRECTION OR REVIEW OF ANY SYSTEM OR METHOD BY THE ARCHITECT SHALL CHANGE OR AFFECT THE CONTRACTOR'S RESPONSIBILITY IN THIS MATTER. DEFLECTION OF EXISTING TO BE LIMITED TO 1/8" IN ORDER TO MAINTAIN INTEGRITY OF STRUCTURE.

N. NOTHING IN THESE PLANS OR SPECIFICATIONS SHALL BE CONSTRUED TO PERMIT WORK NOT CONFORMING TO THE MOST STRINGENT OF CODES. ALL WORK SHALL BE DONE IN ACCORDANCE WITH THE UNIFORM BUILDING CODE, UNIFORM FIRE CODE (UFC), AND ALL OTHER FEDERAL, STATE, COUNTY AND CITY ORDINANCES.

O. COMBUSTIBLE DEBRIS, RUBBISH AND WASTE MATERIAL SHALL NO T BE ACCUMULATED WITHIN BUILDINGS. RUBBISH AND WASTE MATERIAL SHALL BE REMOVED AS OFTEN AS PRACTICAL (ARTICLE 87; UFC).

P. FINAL APPROVAL IS SUBJECT TO ACCEPTANCE AFTER A FIELD INSPECTION.

Q. FIRE EXTINGUISHER REQUIREMENTS:A MINIMUM 2A-10BC RATED FIRE EXTINGUISHER(S) IS (REQUIRED)(RECOMMENDED) FOR 3000 SQUARE FEET. THE EXTINGUISHER(S) SHALL BE LOCATED SO THAT IT WILL BE UNNECESSARY FOR A PERSON TO TRAVEL MORE THAN 75 FEET TO REACH THE NEAREST EXTINGUISHERS SHOULD BE MOUNTED ON THE WALL SO THE TOP OF THE EXTINGUISHER SHOULD BE MOUNTED NEAR EXITS OR IN NORMAL EXIT PATHWAYS. IF NECESSARY, A SIGN SHALL BE POSTED TO CLEARLY INDICATE THE LOCATION OF THE EXTINGUISHER. (SECTION 1002.2 UFC/UFCS 10-1).

GC SHALL VERIFY THESE REQUIREMENTS ARE MET AND REPLACE/ PROVIDE EXTINGUISHERS AS REQUIRED BY FIRE DEPARTMENT.

R. PER COUNTY ENVIRONMENTAL HEALTH DEPT. ONE RESTROOM IS TO REMAIN OPEN DURING CONSTRUCTION.

S. THE GENERAL CONTRACTOR SHALL VERIFY EXISTING HOOD ANSUL SYSTEM IS IN COMPLIANCE WITH CURRENT UL 300 REQUIREMENTS AND NOTIFY OWNER IF NOT PRIOR TO START OF WORK.

T. ALL WORK SHALL BE DONE IN COMPLIANCE WITH CURRENT STATE AND FEDERAL ACCESSIBILITY REQUIREMENTS. REFER TO DRAWINGS FOR STANDARD COMPLIANCE REQUIREMENTS ALTHOUGH NOT ALL DETAILS ARE APPLICABLE TO THIS PROJECT. NOTIFY OWNER OF ANY NON COMPLIANT WORK FOR RESOLUTION PRIOR TO STARTING SUCH WORK.

U. ALL WORK DESCRIBED HEREIN THESE PLANS, AND OTHER CONTRACT DOCUMENTS, SHALL BE THE RESPONSIBILITY OF THE GENERAL CONTRACTOR UNLESS SPECIFICALLY NOTED OTHERWISE (I.E. BY OWNER, OTHERS OR VENDOR). WORK, SUCH AS KITCHEN EQUIPMENT, IS SUPPLIED BY OWNER BUT INSTALLED BY CONTRACTOR. OTHER WORK, SUCH AS SIGNAGE, MAY BE SUPPLIED AND INSTALLED BY VENDORS BUT REQUIRES WORK BY CONTRACTOR TO COMPLETE.

IN ALL SUCH CASES THE CONTRACTOR SHALL BE RESPONSIBLE FOR COORDINATING SUCH WORK WITH THE VENDOR(S) INCLUDING VERIFYING FIELD CONDITIONS AND MEASUREMENTS AND DELIVERY TIMES.

V. ADA REQUIREMENTS: THE COST TO COMPLETE THE PERMITTED WORK EXCEEDS THE CURRENT VALUATION THRESHOLD ($156,162.00) FOR REMODELS/ ALTERATION. GC SHALL CONFIRM THAT THE FOLLOWING ACCESSIBLE FEATURES ARE 100% COMPLIANT PER 2016 CBC 11B 202.4 EXCEPTION 8 :

A. PRIMARY ENTRANCES TO AREA OF ALTERATION.
B. PATH OF TRAVEL TO AREA OF ALTERATION.
C. RESTROOMS SERVING AREA OF ALTERATION.
D. PARKING, STORAGE, ALARMS SERVING AREA OF ALTERATION.
E. NO PUBLIC TELEPHONES OR DRINKING FOUNTAINS ARE PROVIDED OR EXISTING.

GENERAL NOTES — I

CITY OF SAN JOSE — CAPITAL OF SILICON VALLEY — Planning, Building and Code Enforcement

FORM #300 02/01/17 SUBJECT TO CHANGE

Accessibility Compliance Form

This form enables the Applicant to verify that the proposed construction will conform to California Building Code accessibility requirements.

ACCESSIBILITY COMPLIANCE DECLARATION

PROJECT ADDRESS: Number: 2770 Street: Alum Rock Ave City: San Jose Zip: 95127

I have surveyed the building at the above address for compliance with required accessibility features per the California Building Code. Proposed alteration work will include any upgrades required to provide compliance with accessibility features serving the area of work as described in section CBC 11B-202. I acknowledge the following scope of required upgrades:

CHECK ONE BOX

☑ The existing required accessibility features serving the area of work are in conformance with California Building Code.

■ Upgrades to the existing condition are proposed to provide full compliance with required accessibility features serving the area of work in conformance with California Building Code.

☐ The feasibility of the proposed work will be severely impacted if full accessibility compliance is provided. Not all access features will be provided with the proposed scope of work, thus an Unreasonable Hardship determination is sought. Upgrades will be provided for all features not exempted in the approved **Accessibility Unreasonable Hardship Application.**

Hugh Murphy 6/14/19
SIGNATURE PRINT NAME DATE

I am the: ☑ Project Designer ☐ Business Owner ☐ Other

CITY OF SAN JOSE BUILDING DIVISION
APPROVED PLAN SET
☒ OFFICE SET ( ) FIELD SET

ADDRESS 2770 ALUM ROCK AVE
PERMIT No. DATE
P.C. No. 19-125239 DATE 08, 14, 19
CODE EDITIONS: CBC, UMC, UPC 2016 NEC ENERGY DA
OCCUPANCY GROUP(S) A-2 TYPE OF CONSTRUCTION VB

PLANS APPROVED FOR:	CHECKED BY	APPROVED BY
☒ BUILDING NON STRUCT	St.	St.
☒ BUILDING STRUCT	St.	St.
( ) ELECTRICAL		
( ) PLUMBING		
( ) MECHANICAL		
( ) OTHER		
( ) ZONING	PLANNING PERMIT #	

OFFICE

San José Permit Center: COMMENTS www.sanjoseca.gov/building San José City Hall, 200 E. Santa Clara St., San José, CA 95113

SAN JOSE FORM 300 — C

VMI architecture
Design · Planning · Interiors
637 5th Avenue San Rafael, CA 94901
415-451-2500 415-451-2595 fax
www.vmiarchitecture.com

VMI JOB NUMBER
1856

LICENSED ARCHITECT — HUGH EDWARD MURPHY — No. C17926 — REN. 10/31/19 — STATE OF CALIFORNIA

OFFICE

RECORD DATES
DD SUBMITTAL
BLDG. SUBMITTAL
BID SET
CONTRACT SET

REVISIONS
1 07/24/19 BLDG - PC-1

CLIENT
Tambro Inc.
2780 Alum Rock Ave.
San Jose, CA 95127
STORE #024525

TACO BELL REMODEL
2770 Alum Rock Ave
San Josel, CA 95127
APN#: 484-20-037-2

TACO BELL
MOD EXPL
MID TERM

TITLE SHEET
T1-0

PC #19-125239

19 AUG 19

BEP

W:\Data\Tambro\1856_Tambro_SanJose_AlumRock_024525\03_cd_current\011_1856_ADA-1.dwg By: ARCHASSOCIATE01 Saved on:7/22/2019 1:43:09 PM

ALL IDEAS, DESIGNS, ARRANGEMENTS AND PLANS INDICATED BY THIS DRAWING ARE OWNED BY, AND THE PROPERTY OF THIS OFFICE AND WERE CREATED, EVOLVED AND DEVELOPED FOR USE ON, AND IN CONNECTION WITH, THE SPECIFIED PROJECT. NONE OF SUCH IDEAS, DESIGNS, ARRANGEMENTS OR PLANS SHALL BE USED BY OR DISCLOSED TO ANY PERSON, FIRM OR CORPORATION FOR ANY PURPOSE WHATSOEVER WITHOUT THE WRITTEN PERMISSION OF PROJECT ARCHITECT. WRITTEN DIMENSIONS ON THESE DRAWINGS SHALL HAVE PRECEDENCE OVER SCALE DIMENSIONS. CONTRACTORS SHALL VERIFY AND BE RESPONSIBLE FOR, ALL DIMENSIONS AND CONDITIONS ON THE JOB AND THIS OFFICE MUST BE NOTIFIED OF ANY VARIATION FROM THE DIMENSIONS AND CONDITIONS SHOWN BY THESE DRAWINGS. SHOP DETAILS OF ADEQUATE SCALE MUST BE SUBMITTED TO THIS OFFICE FOR APPROVAL BEFORE PROCEEDING WITH FABRICATION ON ITEMS SO NOTED.

CONSTRUCTION NOTES

1. CONSTRUCT SIDEWALKS WITH THE SLOPE 0.5% LESS THAN THE MAXIMUM ALLOWABLE ADA STANDARD.
2. ALL CLEAR DISTANCES ARE "CLEAR" TO THE FACE OF FINISH AND/ OR VENEER.

HAZARDS AND PROTRUDING OBJECTS

1. MINIMUM CLEAR FLOOR OR GROUND SPACE REQUIRED TO ACCOMMODATE A SINGLE, STATIONARY WHEELCHAIR AND OCCUPANT IS 30 INCHES BY 48 INCHES. MINIMUM CLEAR FLOOR OR GROUND SPACE FOR WHEELCHAIRS MAY BE POSITIONED FOR FORWARD OR PARALLEL APPROACH TO AN OBJECT. FLOOR OR GROUND SPACE FOR WHEELCHAIRS MAY BE PART OF THE KNEE SPACE REQUIRED UNDER SOME OBJECTS.
2. PROVIDE AN ADDITIONAL 12 INCHES WIDTH ON ONE SIDE FOR ALCOVES GREATER THAN 15 INCHES DEEP AND DESIGNED FOR SIDE APPROACH.
3. PROVIDE AN ADDITIONAL 6 INCHES WIDTH ON ONE SIDE FOR ALCOVES GREATER THAN 24 INCHES DEEP AND DESIGNED FOR FRONT APPROACH.
4. OBJECTS PROJECTING FROM WALLS WITH THEIR LEADING EDGES BETWEEN 27 INCHES AND 80 INCHES ABOVE THE FINISHED FLOOR SHALL PROTRUDE NO MORE THAN 4 INCHES INTO WALKS, HALLS, CORRIDORS, PASSAGEWAYS, OR AISLES.
5. OBJECTS MOUNTED WITH THEIR LEADING EDGES AT OR BELOW 27 INCHES ABOVE THE FINISHED FLOOR MAY PROTRUDE ANY AMOUNT.
6. FREESTANDING OBJECTS MOUNTED ON POSTS / PYLONS MAY OVERHANG 12 INCHES MAXIMUM FROM 27 INCHES TO 80 INCHES ABOVE THE GROUND OR FINISHED FLOOR.
7. PROTRUDING OBJECTS SHALL NOT REDUCE THE REQUIRED CLEAR WIDTH OF AN ACCESSIBLE ROUTE OR MANEUVERING SPACE.
8. ANY OBSTRUCTION OVERHANGING A PEDESTRIAN WAY SHALL BE A MINIMUM OF 80 INCHES ABOVE THE WALKING SURFACE AS MEASURED TO THE BOTTOM OF THE OBSTRUCTION.

PARKING

1. SURFACE SLOPES OF ACCESSIBLE PARKING SPACES FOR THE PHYSICALLY DISABLED SHALL NOT EXCEED 3/16 INCH PER FOOT (1.5% GRADIENT) IN ANY DIRECTION.
2. DISABLED PARKING SPACES SHALL BE LOCATED SO AS NOT TO REQUIRE USERS TO WHEEL OR WALK BEHIND ANY OTHER NON-DISABLED OR DISABLED PARKING SPACE.
3. IN EACH PARKING AREA, A BUMPER OR CURB SHALL BE PROVIDED AND LOCATED TO PREVENT ENCROACHMENT OF CARS OVER THE REQUIRED WIDTH OF WALKWAYS.
4. PARKING SPACES RESERVED FOR PERSONS WITH PHYSICAL DISABILITIES SHALL BE IDENTIFIED BY A REFLECTIVE SIGN PERMANENTLY POSTED IMMEDIATELY ADJACENT TO AND VISIBLE FROM EACH STALL OR SPACE, CONSISTING OF A PROFILE VIEW OF A WHEELCHAIR WITH OCCUPANT IN WHITE ON DARK BLUE BACKGROUND. THE SIGN SHALL NOT BE SMALLER THAN 70 INCHES IN AREA AND, WHEN IN THE PATH OF TRAVEL, SHALL BE POSTED AT A MINIMUM HEIGHT OF 80 INCHES FROM THE BOTTOM OF THE SIGN TO TOP OF SIDEWALK. SIGNS MAY ALSO BE CENTERED ON THE WALL AT THE INTERIOR END OF THE PARKING SPACE AT A MINIMUM HEIGHT OF 36 INCHES FROM THE PARKING SPACE FINISHED GRADE, GROUND, OR SIDEWALK (WHICHEVER IS HIGHEST).

WALKS AND SIDEWALKS

1. WALKS AND SIDEWALKS SHALL HAVE A CONTINUOUS COMMON SURFACE NOT EXCEEDING 1.5% CROSS SLOPE AND SHALL NOT BE INTERRUPTED BY STEPS OR BY ABRUPT CHANGES IN LEVEL WHICH EXCEED 1/4 INCH, AND SHALL BE A MINIMUM OF 48 INCHES IN WIDTH. SURFACES SHALL BE SLIP RESISTANT.
2. ANY OBSTRUCTION OVER WALKWAYS SHALL HAVE A CLEAR VERTICAL CLEARANCE OF 80 INCHES. AN OBJECT SHALL NOT PROTRUDE INTO WALKWAY MORE THAN 4 INCHES.
3. WALKS, SIDEWALKS, AND PEDESTRIAN WAYS SHALL BE FREE OF GRATING WHENEVER POSSIBLE. GRID OPENINGS WITHIN GRATINGS LOCATED IN THE SURFACE OF ANY OF THESE AREAS SHALL BE LIMITED TO 1/2 INCH IN THE DIRECTION OF THE TRAFFIC FLOW.
4. WHEN THE SLOPE IN THE DIRECTION OF TRAVEL OF ANY WALK EXCEEDS 1 VERTICAL TO 20 HORIZONTAL (5%), IT SHALL COMPLY WITH THE PROVISIONS OF PEDESTRIAN RAMPS.
5. A LEVEL AREA, 1.5% MAX SLOPE, SHALL BE PROVIDED AT ALL DOORS. REFER TO ENTRANCE NOTES BELOW AND ACCESSIBLE DETAILS FOR CLEAR SPACE REQUIREMENTS.
6. WARNING CURBS, MINIMUM 6 INCHES IN HEIGHT, SHALL BE PROVIDED FOR ANY ABRUPT LEVEL CHANGE ADJACENT TO WALKWAYS EXCEPT AT ADJACENT STREET OR DRIVEWAY / PARKING STALL.

ENTRANCES AND DOORS

1. ALL PRIMARY ENTRANCES AND EXTERIOR GROUND FLOOR EXIT DOORS TO BUILDINGS AND FACILITIES SHALL BE MADE ACCESSIBLE TO THE PHYSICALLY DISABLED.
2. ALL ACCESSIBLE ENTRANCES SHALL BE IDENTIFIED WITH AT LEAST ONE STANDARD SIGN AND WITH ADDITIONAL DIRECTIONAL SIGNS, AS REQUIRED, VISIBLE FROM APPROACHING PEDESTRIAN WAYS.
3. AT ALL TACTILE DOOR SIGNS, A CLEAR FLOOR SPACE AT LEAST 18 INCHES BY 18 INCHES CENTRED ON THE SIGN AND CLEAR OF ANY DOOR SWINGS SHALL BE PROVIDED.
4. EVERY REQUIRED ENTRANCE OR PASSAGE DOORWAY SHALL BE OF A SIZE AS TO PERMIT THE INSTALLATION OF A DOOR NOT LESS THAN 36 INCHES IN WIDTH, AND NOT LESS THAN 80 INCHES IN HEIGHT. DOORS SHALL BE CAPABLE OF OPENING AT LEAST 90 DEGREES AND SHALL BE MOUNTED SO THAT THE CLEAR WIDTH OF THE DOORWAY IS NOT LESS THAN 32 INCHES.
5. LATCHING AND LOCKING DOORS THAT ARE HAND ACTIVATED SHALL HAVE A TYPE OF LEVER HARDWARE, PANIC BARS, PUSH-PULL ACTIVATING BARS, OR OTHER HARDWARE DESIGNED TO PROVIDE PASSAGE WITHOUT REQUIRING THE ABILITY TO GRASP THE OPENING HARDWARE.
6. LEVER HAND ACTIVATED DOOR OPENING HARDWARE SHALL BE CENTERED BETWEEN 34 INCHES AND 44 INCHES MAXIMUM ABOVE THE FLOOR.
7. THE FLOOR OR LANDING LENGTH ON EACH SIDE OF AN ENTRANCE OR PASSAGE DOOR SHALL BE LEVEL AND CLEAR AT LEAST 60 INCHES IN THE DIRECTION OF THE DOOR SWING AND AT LEAST 48 INCHES OPPOSITE THE DIRECTION OF THE DOOR SWING AS MEASURED AT RIGHT ANGLES TO THE FACE OF THE DOOR IN THE CLOSED POSITION. THE WIDTH OF THE LEVEL AND CLEAR AREA ON THE SIDE WHICH THE DOOR SWINGS SHALL EXTEND A MINIMUM OF 24 INCHES PAST THE STRIKE EDGE OF THE DOOR FOR DOORS WITH LATCH SIDE APPROACH AND 36 INCHES FOR DOORS REQUIRING HINGE SIDE APPROACH. REFER TO ACCESSIBLE DETAILS FOR ADDITIONAL CLEARANCE REQUIREMENTS ON SHEET ADA-2.
8. THE FLOOR OR LANDING SHALL NOT BE MORE THAN 1/2 INCH LOWER THAN THE THRESHOLD OF THE DOORWAY. CHANGES IN LEVEL BETWEEN 1/4 INCH AND 1/2 INCH SHALL BE LEVELED WITH A SLOPE NO GREATER THAN 1:2.
9. THE BOTTOM 10 INCHES OF ALL DOORS (EXCEPT AUTOMATIC AND SLIDING) SHALL HAVE A SMOOTH UNINTERRUPTED SURFACE TO ALLOW THE DOOR TO BE OPENED BY A WHEELCHAIR FOOTREST WITHOUT CREATING A TRAP OR HAZARDOUS CONDITION. WHERE NARROW FRAME DOORS ARE USED, A 10 INCH HIGH SMOOTH PANEL SHALL BE INSTALLED ON THE PUSH SIDE OF THE DOOR WHICH WILL ALLOW THE DOOR TO BE OPENED BY A WHEELCHAIR FOOTREST.
10. THE MAXIMUM EFFORT TO OPERATE DOORS SHALL NOT EXCEED 5 LBS. FOR ALL EXTERIOR AND INTERIOR DOORS. SUCH PULL OR PUSH EFFORT BEING APPLIED AT RIGHT ANGLES TO HINGED DOORS AND AT THE CENTER PLANE OF SLIDING OR FOLDING DOORS. COMPENSATING DEVICES OR AUTOMATIC DOOR OPERATORS MAY BE UTILIZED TO MEET THE ABOVE STANDARDS. WHEN FIRE DOORS ARE REQUIRED, THE MAXIMUM EFFORT TO OPERATE THE DOOR MAY NOT EXCEED 15 LBS.

STAIRWAYS

1. STAIRWAYS SHALL HAVE INTERMEDIATE HANDRAILS LOCATED IN SUCH A MANNER THAT ALL PORTIONS OF THE STAIRWAY WIDTH REQUIRED FOR EGRESS CAPACITY ARE WITHIN 30 INCHES OF A HANDRAIL.
2. STAIR RISER HEIGHTS SHALL BE 7 INCHES MAXIMUM AND 4 INCHES MINIMUM. THE RISER HEIGHT SHALL BE MEASURED VERTICALLY BETWEEN THE LEADING EDGES OF ADJACENT TREADS. RECTANGULAR TREAD DEPTHS SHALL BE 11 INCHES MINIMUM MEASURED HORIZONTALLY BETWEEN THE VERTICAL PLANES OF THE FOREMOST PROJECTION OF ADJACENT TREADS AND AT RIGHT ANGLE TO THE TREADS LEADING EDGE.
3. THE UPPER APPROACH AND THE LOWER TREAD OF EACH INTERIOR STAIR, AND ALL EXTERIOR STAIR TREADS, SHALL BE MARKED BY A STRIP OF CLEARLY CONTRASTING COLOR AT LEAST 2 INCHES WIDE AND PLACED PARALLEL TO, AND NOT MORE THAN, 1 INCH FROM THE NOSE OF THE STEP OR LANDING TO ALERT THE VISUALLY IMPAIRED. THE STRIPE SHALL BE OF A MATERIAL THAT IS AT LEAST AS SLIP RESISTANT AS THE TREADS OF THE STAIR.
4. WHERE STAIRS OCCUR OUTSIDE OF A BUILDING, THE UPPER APPROACH AND ALL TREADS SHALL BE MARKED BY A STRIP OF CLEARLY CONTRASTING COLOR AT LEAST 2 INCHES WIDE AND PLACED PARALLEL TO, AND NOT MORE THAN 1 INCH FROM THE NOSE OF THE STEP OR LANDING TO ALERT THE VISUALLY IMPAIRED. THE STRIP SHALL BE OF A MATERIAL THAT IS AT LEAST AS SLIP RESISTANT AS THE TREADS OF THE STAIR. A PAINTED STRIP SHALL BE ACCEPTABLE.
5. ALL STAIR TREAD SURFACES SHALL BE SLIP RESISTANT.
6. HANDRAILS AT STAIRWAYS SHALL BE 34 INCHES TO 38 INCHES ABOVE THE NOSING OF THE TREADS MEASURED TO THE TOP OF THE HANDRAIL.
7. HANDRAILS AT THE TOP OF STAIRWAYS SHALL EXTEND A MINIMUM OF 12 INCHES OF LEVEL DISTANCE BEYOND THE TOP NOSING. HANDRAILS AT THE BOTTOM OF STAIRWAYS SHALL EXTEND A MINIMUM OF TREAD WIDTH PLUS 12 INCHES BEYOND THE BOTTOM NOSING BEFORE THEY ARE RETURNED. AT THE BOTTOM, THE HANDRAIL SHALL CONTINUE TO SLOPE FOR A DISTANCE OF THE WIDTH OF ONE TREAD FROM THE BOTTOM RISER. THE REMAINDER OF THE EXTENSION SHALL BE HORIZONTAL (LEVEL).
8. WHERE THE EXTENSION OF THE HANDRAIL IN THE DIRECTION OF THE STAIR RUN WOULD CREATE A HAZARD, THE EXTENSION SHALL BE MADE AT RIGHT ANGLES, ON THE FACE OF A RETURNING WALL. WHERE THE STAIRS ARE CONTINUOUS THE HANDRAIL SHALL BE CONTINUOUS AND NEED NOT EXTEND OUT INTO THE LANDING.
9. ALL HANDRAIL ENDS SHALL BE RETURNED OR SHALL TERMINATE IN NEWEL POSTS OR SAFETY TERMINALS.
10. ALL HANDRAILS PROJECTED FROM A WALL SHALL HAVE AN ABSOLUTE CLEARANCE OF 1-1/2 INCHES BETWEEN THE WALL AND THE HANDRAIL.
11. THE HANDGRIP PORTION OF HANDRAILS SHALL BE NOT LESS THAN 1-1/4 INCH NOR MORE THAN 1-1/2 INCH OUTSIDE DIAMETER IN CROSS-SECTION (1-1/2" STD. PIPE IS ACCEPTABLE) DIMENSION OR THE SHAPE SHALL PROVIDE AN EQUIVALENT SMOOTH GRIPPING SURFACE WITH NO SHARP CORNERS.

RAMPS

1. ALL RAMPS USED AS EXITS AND ANY PATH OF TRAVEL HAVING A SLOPE GREATER THAN 1:20 (5%) SHALL COMPLY WITH THE REQUIREMENTS OF THIS SECTION. RAMPS SHALL HAVE THE LEAST POSSIBLE SLOPE.
2. PEDESTRIAN RAMPS SERVING PRIMARY ENTRANCES TO A BUILDING SHALL HAVE A MINIMUM WIDTH OF 48 INCHES.
3. ALL RAMPS IN AREAS ACCESSIBLE TO PERSONS WITH DISABILITIES ON A PATH OF TRAVEL OR SERVING EXITS SHALL HAVE A 1:12.5 (8.0%) MAXIMUM SLOPE WITH CROSS SLOPES NO GREATER THAN 1:65 (1.5%).
4. THE LEVEL LANDING WIDTH OF ANY RAMP SHALL EXTEND PAST THE STRIKE EDGE OF ANY DOOR OR GATE AS SHOWN ON DETAILS.
5. DOORS STANDING IN ANY POSITION SHALL NOT REDUCE THE MINIMUM DIMENSION OF THE RAMP TO LESS THAN 42 INCHES OR THE REQUIRED WIDTH BY MORE THAN 3 INCHES WHEN FULLY OPEN (CA. ONLY).
6. ALL CURB RAMPS SHALL BE PROVIDED WITH TRUNCATED DOMES TO COMPLY WITH THE MINIMUM REQUIREMENTS OF A.D.A.A.G. AND THE LATEST CA-24 ACCESS REQUIREMENTS.
7. HANDRAILS ARE REQUIRED ON RAMPS WHEN THE SLOPE EXCEEDS 1:20 (5%). HANDRAILS AT RAMPS SHALL RUN ALONG BOTH SIDES OF A RAMP, BE CONTINUOUS THE FULL LENGTH, HANDRAILS SHALL EXTEND A MINIMUM OF 12 INCHES OF LEVEL DISTANCE BEYOND THE TOP AND BOTTOM OF THE RAMP. HANDRAIL EXTENSIONS SHALL RETURN TO THE LAST SUPPORT OF THE HANDRAIL.
8. THE HANDRAIL GRIP SURFACE AT RAMPS SHALL BE MOUNTED BETWEEN 34 INCHES AND 38 INCHES ABOVE THE RAMP SURFACE.
9. RAMPS WITH A RISE GREATER THAN 6 INCHES SHALL HAVE HANDRAILS ON BOTH SIDES.
10. GUARDS SHALL BE LOCATED ALONG OPEN SIDED WALKING SURFACES, STAIRWAYS, RAMPS AND LANDINGS THAT ARE LOCATED MORE THAN 30 INCHES ABOVE THE FLOOR OR GRADE BELOW. GUARDS SHALL BE 42 INCHES HIGH, MEASURED VERTICALLY ABOVE ADJACENT WALKING SURFACE. GUARDS SHALL HAVE BALUSTERS OR ORNAMENTAL PATTERN SUCH THAT A 4-INCH-DIAMETER SPHERE CANNOT PASS THROUGH ANY OPENING.

BABY CHANGING TABLE (WHEN PROVIDED)

1. BABY CHANGING TABLES WHEN DEPLOYED SHALL NOT OBSTRUCT THE REQUIRED WIDTH OF AN ACCESSIBLE ROUTE EXCEPT CAN PROJECT MAXIMUM 4" BETWEEN 27" & 80" ABOVE FINISH FLOOR. CHANGING TABLES SHALL NOT BE LOCATED TOILET COMPARTMENTS THAT ARE WHEELCHAIR ACCESSIBLE WITHIN A MULTIPLE ACCOMMODATION TOILET FACILITY.

SANITARY FACILITIES (GENERAL)

1. ALL DOORWAYS LEADING TO SANITARY FACILITIES SHALL HAVE 32 INCH CLEAR, UNOBSTRUCTED OPENINGS.
2. ALL SINKS, FAUCET CONTROLS, AND OPERATING MECHANISMS SHALL BE OPERABLE WITH ONE HAND AND SHALL NOT REQUIRE TIGHT GRASPING, PINCHING, OR TWISTING OF THE WRIST. THE FORCE REQUIRED TO ACTIVATE CONTROLS SHALL BE NO GREATER THAN 5 LBS. LEVER-OPERATED, PUSH TYPE, AND ELECTRONICALLY CONTROLLED MECHANISMS ARE EXAMPLES OF ACCEPTABLE DESIGNS. SELF-CLOSING VALVES ARE ALLOWED IF THE FAUCET REMAINS OPEN FOR AT LEAST 10 SECONDS.
3. LAVATORIES SHALL BE MOUNTED WITH A MINIMUM DISTANCE OF 18 INCHES FROM A WALL OR PARTITION TO THE CENTER OF THE FIXTURE. ACCESSIBLE LAVATORIES SHALL BE MOUNTED WITH THE FRONT OF THE HIGHER OF THE RIM OR COUNTER SURFACE NO HIGHER THAN 34 INCHES ABOVE THE FLOOR.
4. DOORS TO ACCESSIBLE TOILET ROOMS SHALL NOT ENCROACH INTO THE CLEAR FLOOR SPACE REQUIRED FOR ANY FIXTURE.

TOILET ROOM IDENTIFICATION SYMBOLS

1. DOOR MOUNTED SIGNAGE
   - 1.1. (MEN'S) - EQUILATERAL TRIANGLE 1/4 INCH THICK WITH EDGES 12 INCHES LONG AND A VERTEX POINTING UPWARD.
   - 1.2. (WOMEN'S) - 12 INCH DIAMETER CIRCLE 1/4 INCH THICK.
   - 1.3. (UNISEX) - 12 INCH DIAMETER CIRCLE 1/4 INCH THICK WITH 1/4 INCH THICK TRIANGLE SUPERIMPOSED WITHIN THE CIRCLE.
   - 1.4. THE COLOR AND CONTRAST OF THE SIGN DISTINCTLY CONTRASTS WITH THE DOOR COLOR.
   - 1.5. SIGNS ARE CENTERED ON THE DOOR 60 INCHES FROM THE FLOOR.
2. WALL MOUNTED SIGNAGE
   - 2.1. THE INTERNATIONAL SYMBOL OF ACCESSIBILITY IS INSTALLED ON THE WALL ADJACENT TO THE LATCH SIDE OF THE DOOR. THE BORDER DIMENSIONS OF THIS PICTOGRAM SHALL BE A MINIMUM OF 6 INCHES IN HEIGHT. WHERE THERE IS NO WALL SPACE ON THE LATCH SIDE, INCLUDING AT DOUBLE LEAF DOORS, SIGNS SHALL BE PLACED ON THE NEAREST ADJACENT WALL, PREFERABLY ON THE RIGHT.
   - 2.2. DESCRIPTION AS TO TOILET ROOM USAGE (I.E. MEN'S TOILET ROOM, ETC.) IS PLACED DIRECTLY BELOW THE SYMBOL OF ACCESSIBILITY.
   - 2.3. THE CHARACTERS AND BACKGROUND OF THE SIGN IS EGGSHELL, MATTE, OR OTHER NON-GLARE FINISH AND THE COLOR AND CONTRAST OF THE SIGN DISTINCTLY CONTRASTS WITH THE COLOR AND CONTRAST OF THE WALL.
   - 2.4. SIGNS WITH RAISED CHARACTERS AND BRAILLE SHALL BE LOCATED 48 INCHES MINIMUM ABOVE THE FINISH FLOOR OR GROUND SURFACE, MEASURED FROM THE BASELINE OF THE LOWEST LINE OF BRAILLE AND 60 INCHES MAXIMUM ABOVE THE FINISH FLOOR OR GROUND SURFACE, MEASURED FROM THE BASELINE OF THE HIGHEST LINE OF RAISED CHARACTERS. MOUNTING LOCATION SHALL BE DETERMINED SO THAT A PERSON MAY APPROACH WITHIN 3 INCHES OF SIGNAGE WITHOUT ENCOUNTERING PROTRUDING OBJECTS OR STANDING WITHIN THE SWING OF A DOOR.
   - 2.5. LETTERS AND NUMERALS ARE RAISED 1/32 INCH, ARE SANS-SERIF UPPERCASE CHARACTERS, ARE A MINIMUM 5/8 INCH HIGH AND A MAXIMUM OF 2 INCHES HIGH, AND ARE ACCOMPANIED BY GRADE 2 BRAILLE.

TOILET ROOM FIXTURES AND STALLS

1. THE HEIGHT OF ACCESSIBLE WATER CLOSETS SHALL BE 17 INCHES MINIMUM AND 19 INCHES MAXIMUM MEASURED TO THE TOP OF THE SEAT.
2. THE CENTER LINE O THE ACCESSIBLE WATER CLOSET SHALL BE 17 INCHES MINIMUM AND 18 INCHES MAXIMUM FROM SIDE WALL OR PARTITION.
3. TOILET AND URINAL FLUSH CONTROLS SHALL BE OPERABLE WITH ONE HAND AND SHALL NOT REQUIRE TIGHT GRASPING, PINCHING, OR TWISTING OF THE WRIST. **CONTROLS FOR THE FLUSH VALVES SHALL BE MOUNTED ON THE OPEN (WIDE) SIDE OF THE TOILET STALL**, NO MORE THAN 44 INCHES ABOVE THE FLOOR. THE FORCE REQUIRED TO ACTIVATE CONTROLS SHALL BE NO GREATER THAN 5 LBS.
4. WHERE URINALS ARE PROVIDED, AT LEAST ONE SHALL HAVE A CLEAR SPACE 30 INCHES WIDE BY 48 INCHES LONG IN FRONT OF THE URINAL. AT LEAST ONE URINAL WITH A RIM PROJECTING A MINIMUM OF 13.5 INCHES FROM THE BACK OF THE FIXTURE AND A MAXIMUM OF 17 INCHES ABOVE THE FLOOR SHALL BE INSTALLED.
5. A CLEAR FLOOR SPACE 30 INCHES WIDE BY 48 INCHES LONG SHALL BE PROVIDED IN FRONT OF A LAVATORY TO ALLOW FORWARD APPROACH. SUCH CLEAR SPACE SHALL ADJOIN OR OVERLAP AN ACCESSIBLE ROUTE AND SHALL EXTEND INTO KNEE AND TOE SPACE UNDERNEATH LAVATORY.
6. LAVATORIES SHALL BE MOUNTED WITH A CLEARANCE OF AT LEAST 29 INCHES FROM THE FLOOR TO THE BOTTOM OF THE APRON WITH KNEE CLEARANCE UNDER THE FRONT LIP EXTENDING A MINIMUM OF 30 INCHES IN WIDTH WITH 8 INCHES MINIMUM DEPTH AT THE TOP. TOE CLEARANCE SHALL BE THE SAME WIDTH AND MINIMUM OF 9 INCHES HIGH FROM THE FLOOR AND A MINIMUM OF 11 INCHES DEEP FROM THE FRONT OF THE LAVATORY.
7. HOT WATER AND DRAIN PIPES UNDER LAVATORIES SHALL BE INSULATED OR OTHERWISE COVERED. THERE SHALL BE NO SHARP OR ABRASIVE SURFACES UNDER LAVATORIES.
8. MIRRORS SHALL BE MOUNTED WITH BOTTOM EDGE OF THE REFLECTIVE SURFACE NOT MORE THAN 40 INCHES FROM THE FLOOR. LOCATE SOAP DISPENSERS, PAPER TOWEL DISPENSERS, SANITARY NAPKIN DISPENSERS AND WASTE RECEPTACLES WITH ALL OPERABLE PARTS NOT MORE THAN 40 INCHES FROM THE FLOOR.
9. TOILET TISSUE DISPENSERS SHALL BE LOCATED ON THE WALL 7 INCHES MINIMUM AND 9 INCHES MAXIMUM FROM THE FRONT EDGE OF THE TOILET SEAT. THE DISPENSER OUTLET MUST BE BELOW THE GRAB BAR AND 19 INCHES MINIMUM ABOVE THE FLOOR.
10. A CLEAR SPACE, MEASURED FROM THE FLOOR TO A HEIGHT OF 27 INCHES ABOVE THE FLOOR, WITHIN THE SANITARY FACILITY ROOM, OR SUFFICIENT SIZE TO INSCRIBE A CIRCLE OF A DIAMETER NOT LESS THAN 60 INCHES, OR A CLEAR SPACE NO LESS THAN 56 INCHES BY 63 INCHES IN SIZE SHALL BE PROVIDED. DOORS OTHER THAN THE DOOR TO THE DISABLED TOILET COMPARTMENT, IN ANY POSITION, MAY NOT ENCROACH INTO THIS SPACE BY MORE THAN 12 INCHES. THIS CLEAR SPACE MAY INCLUDE KNEE AND TOE CLEARANCE SPACE UNDER FIXTURES.
11. AN ACCESSIBLE INDIVIDUAL TOILET STALL SHALL PROVIDE AT LEAST 59 INCHES CLEAR FLOOR SPACE FROM THE REAR WALL FOR FLOOR MOUNTED WATER CLOSETS AND 56 INCHES CLEAR FLOOR SPACE FROM THE REAR WALL FOR WALL MOUNTED WATER CLOSETS.
12. FOR ACCESSIBLE TOILET STALLS WITH DOORS ON THE END WALL, THERE MUST BE 48 INCHES CLEAR FROM THE FRONT-MOST POINT OF THE WATER CLOSET. THE SPACE BETWEEN THE CLEAR FLOOR SPACE AND THE 48 INCHES IN FRONT OF THE WATER CLOSET IS CONSIDERED MANEUVERING SPACE. DOORS MAY SWING INTO THE MANEUVERING SPACE.
13. FOR ACCESSIBLE TOILET STALLS WITH DOORS ON THE SIDE WALL THERE MUST BE 60 INCHES CLEAR FROM THE FRONT-MOST POINT OF THE WATER CLOSET. THE SPACE BETWEEN THE CLEAR FLOOR SPACE AND THE 60 INCHES IN FRONT OF THE WATER CLOSET IS CONSIDERED MANEUVERING SPACE. DOORS MAY SWING INTO THE MANEUVERING SPACE.
14. FOR ACCESSIBLE TOILET STALLS WITH IN-SWINING DOORS, THE END WALL MUST BE AT LEAST 36 INCHES BEYOND THE REQUIRED CLEAR FLOOR SPACE.
15. WATER CLOSET COMPARTMENT SHALL BE EQUIPPED WITH A DOOR THAT HAS AN AUTOMATIC CLOSING DEVICE, AND A CLEAR UNOBSTRUCTED OPENING WIDTH OF 32 INCHES WHEN LOCATED AT THE END AND 34 INCHES WHEN LOCATED AT THE SIDE WHEN THE DOOR IS POSITIONED AT AN ANGLE OF 90 DEGREES FROM ITS CLOSED POSITION. DOOR SHALL HAVE A 9 INCH MINIMUM CLEAR OPENING FROM FINISH FLOOR TO BOTTOM OF DOOR.
16. ACCESSIBLE WATER CLOSET DOOR SHALL BE EQUIPPED ON THE INSIDE AND OUTSIDE WITH HANDLES OF A LOOP OR U-SHAPED DESIGN AND LOCATED IMMEDIATELY ABOVE THE LATCH. THE LATCH SHALL BE A FLIP OVER, SLIDING OR OTHER HARDWARE SO AS NOT TO REQUIRE GRASPING OR TWISTING.
17. EXCEPT FOR DOOR OPENINGS, A CLEAR UNOBSTRUCTED ACCESS NOT LESS THAN 44 INCHES SHALL BE PROVIDED TO ALL WATER CLOSET COMPARTMENTS DESIGNED FOR USE BY THE DISABLED.
18. TOE CLEARANCE SHALL EXTEND AT LEAST 6" BEYOND AT LEAST ONE SIDE PARTITION OF AN ACCESSIBLE TOILET STALL UNLESS THE COMPARTMENT IS GREATER THAN 66 INCHES WIDE. THE UNDERSIDE OF ALL PARTITIONS SHALL BE SMOOTH AND FREE FROM SHARP EDGES OR ABRASIVE SURFACES.

TOILET ROOM GRAB BARS

1. GRAB BARS SHALL BE LOCATED ON ONE SIDE AND THE BACK OF THE PHYSICALLY DISABLED TOILET STALL OR COMPARTMENT AND SHALL BE SECURELY ATTACHED 33 INCHES MINIMUM AND 36 INCHES MAXIMUM ABOVE AND PARALLEL TO THE FLOOR MEASURED TO THE TOP OF THE GRIPPING SURFACE.
2. SIDE GRAB BARS SHALL BE AT LEAST 42 INCHES LONG WITH THE FRONT END POSITIONED AT LEAST 54 INCHES FROM THE REAR WALL AND THE BACK END NO LESS THAN 12 INCHES FROM THE REAR WALL. GRAB BARS AT THE BACK STALL SHALL NOT BE LESS THAN 36 INCHES LONG AND EXTEND A MINIMUM OF 12 INCHES FROM THE CENTERLINE OF THE WATER CLOSET ON ONE SIDE AND A MINIMUM OF 24 INCHES FROM THE CENTERLINE OF THE WATER CLOSET ON THE OTHER SIDE.
3. THE DIAMETER OR WIDTH OF THE GRIPPING SURFACES OF A GRAB BAR SHALL BE 1-1/4 INCHES OR THE SHAPE SHALL PROVIDE AN EQUIVALENT GRIPPING SURFACE. IF THE GRAB BARS ARE MOUNTED ADJACENT TO A WALL, THE SPACE BETWEEN THE WALL AND THE GRAB BARS SHALL BE 1-1/2 INCHES.
4. GRAB BARS AND ANY WALL OR OTHER SURFACE ADJACENT TO THEM SHALL BE FREE OF ANY SHARP OR ABRASIVE ELEMENTS.
5. GRAB BARS SHALL NOT ROTATE WITHIN THEIR FITTINGS.
6. GRAB BARS SHALL BE DESIGNED TO SUPPORT A 250 POUND FORCE AT ANY POINT.

ADDITIONAL REQUIREMENTS

1. THE BOTTOM OF RECEPTACLE OUTLET BOXES SHALL BE NOT LESS THAN 15 INCHES ABOVE THE FLOOR
2. THE ELECTRICAL BOX OF SWITCHES INTENDED TO BE USED BY OCCUPANTS OF A ROOM OR AREA TO CONTROL LIGHTING AND RECEPTACLE OUTLETS, APPLIANCES, OR COOLING, HEATING AND VENTILATING EQUIPMENT, SHALL BE NOT LESS THAN 36 INCHES NOR MORE THAN 48 INCHES (MEASURED TO TOP) ABOVE THE FLOOR OR WORKING PLATFORM.
3. THE CENTER OF FIRE ALARM INITIATING DEVICES (BOXES) SHALL BE LOCATED 48 INCHES ABOVE THE LEVEL OF THE ADJACENT FLOOR, WORKING PLATFORM, GROUND SURFACE, OR SIDEWALK.
4. INTERNATIONAL SYMBOL OF ACCESSIBILITY SHALL BE THE STANDARD USED TO IDENTIFY FACILITIES THAT ARE ACCESSIBLE TO AND USABLE BY PHYSICALLY DISABLED PERSONS.
5. THE SYMBOL, SPECIFIED ABOVE, SHALL CONSIST OF A WHITE FIGURE ON A BLUE BACKGROUND. THE BLUE SHALL BE EQUAL TO COLOR NO 15090 IN FEDERAL STANDARD 595A.

ACCESSIBILITY NOTES — A

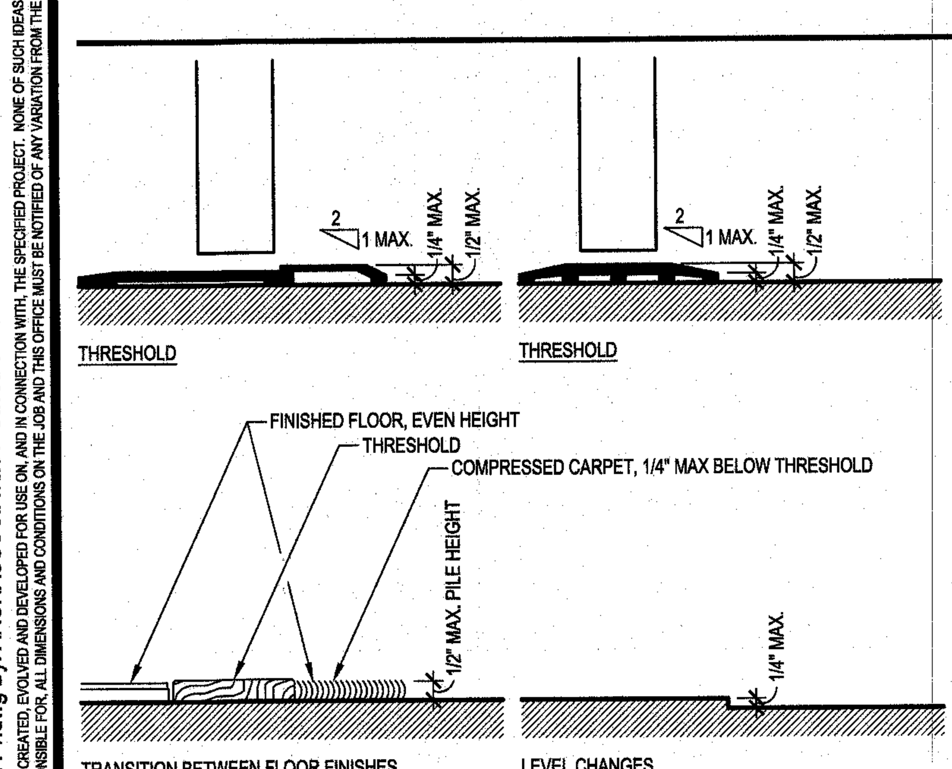

THRESHOLDS AND TRANSITIONS — 3" = 1'-0" — 19

DOOR NOTES:

BOTTOM RAIL:
- A. MINIMUM 10" HIGH SMOOTH SURFACE AT DOOR BOTTOM, EITHER ATTACHED PANEL OR BOTTOM RAIL.

HARDWARE:
- A. OPENABLE FROM INSIDE WITHOUT USE OF KEY OR SPECIAL KNOWLEDGE OR EFFORT.
- B. OPENABLE BY SINGLE EFFORT LEVER-TYPE DEVICE (NOT REQUIRING GRASPING) MOUNTED 34" TO 44" A.F.F.
- C. MAXIMUM 5 LBS. EFFORT TO OPERATE EXTERIOR DOOR, 5 LBS. FOR INTERIOR DOORS.

SIGNAGE:
- A. MOUNTING LOCATION SHALL BE DETERMINED SO THAT A PERSON MAY APPROACH WITHIN 3 INCHES OF SIGNAGE WITHOUT ENCOUNTERING PROTRUDING OBJECTS OR STANDING WITHIN SWING OF DOOR.
- B. IF ACCESSIBILITY OR EXIT SIGN OCCURS ON SIDELITE, PLACE A MATCHING OR BLANK PANEL ON OPPOSITE SIDE.
- C. SIGNS WITH RAISED CHARACTERS AND BRAILLE SHALL BE LOCATED 48 INCHES MINIMUM ABOVE THE FINISH FLOOR OR GROUND SURFACE MEASURED FROM THE BASELINE OF THE LOWEST LINE OF BRAILLE AND 60 INCHES MAXIMUM MEASURED FROM THE BASELINE OF THE HIGHEST LINE OF RAISED CHARACTERS.

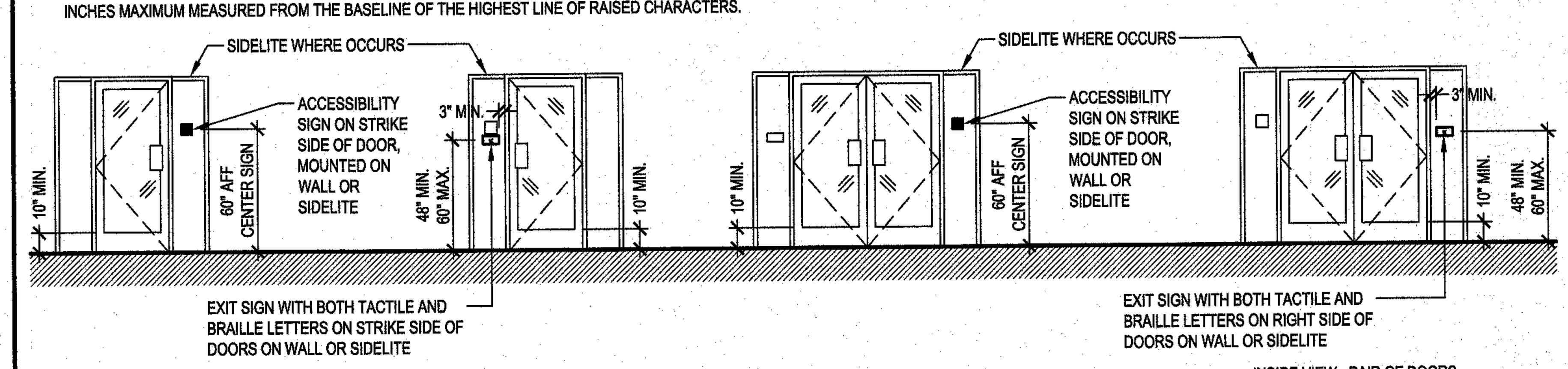

INTERNATIONAL SYMBOL OF ACCESSIBILITY — ENTRANCE SIGN (PLACED ON EXTERIOR OF BUILDING) — EXIT SIGN (PLACED ON INTERIOR OF BUILDING)

EXIT SIGN NOTES:
LETTERS/NUMERALS SHALL BE RAISED 1/32", UPPER CASE SANS SERIF TYPE ON CLEAR PHOTOPOLYMER PLAQUE AND SHALL BE ACCOMPANIED WITH GRADE 2 BRAILLE. RAISED CHARACTERS SHALL BE AT LEAST 5/8" HIGH, BUT NO HIGHER THAN 2".

GRADE 2 BRAILLE STANDARD DIMENSIONS:

DOT BASE DIAMETER	.059"
DOT HEIGHT (ROUNDED ON TOP)	.025"
DOT SPACING WITHIN THE SAME CELL	.10" O.C.
DOT SPACING BETWEEN CELLS	.20" O.C.

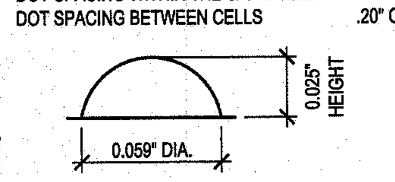

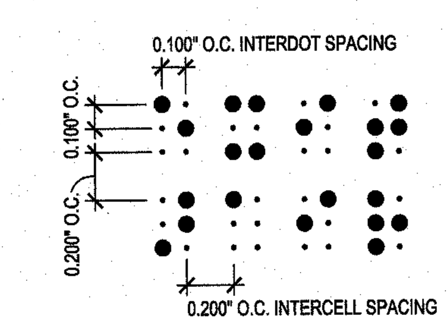

ALL TACTILE EXIT SIGNS ARE IN ADDITION TO ILLUMINATED EXIT SIGNS. AT WALLS SECURE SIGN WITH VINYL FOAM TAPE. AT STOREFRONT LOCATIONS ATTACH SIGN TO GLASS WITH MASTIC CLEAR DOUBLE FACED TAPE AND BEHIND THE SIGN MOUNT A FROSTED VINYL SHAPE OF SAME CONFIGURATION AS SIGN ON EXTERIOR FACE OF GLASS TO EXACTLY ALIGN WITH SIGN.

ACCESSIBILE ENTRANCES AND SIGNAGE — 3/16" = 1'-0" — 7

DISABLED ACCESSIBILITY NOTES AND DETAILS IN DRAWINGS ADA-1, ADA-2, AND ADA-3 ARE INTENDED TO SHOW GENERAL ACCESSIBLE COMPLIANCE AND NOT ALL NOTES OR DETAILS MAY BE APPLICABLE TO THIS PROJECT.

REFER TO PROJECT-SPECIFIC PLANS AND SHEETS FOR EXTENT OF WORK REQUIRING COMPLIANCE WITH ACCESSIBILITY REQUIREMENTS.

SEE PROJECT-SPECIFIC PLANS AND SHEETS FOR SPECIFIC DETAILS AS APPLICABLE.

IN NO CASE ARE REQUIREMENTS ON ADA-1, ADA-2, OR ADA-3 TO BE OVER-RIDDEN.

ADDITIONAL NOTE — B

NOTES:
1. CLEAR SPACES MUST BE LEVEL TO PREVENT WHEELCHAIRS FROM ROLLING WHEN THE OCCUPANT RELEASES THE WHEEL GRIPS TO REACH FOR THE DOOR. 1/4" PER FOOT (1.5%) SLOPE IS ALLOWED FOR DRAINAGE.
2. WHERE DOORS OPEN ONTO, BUT NOT INTO A CORRIDOR, THE REQUIRED LEVEL AREA BEYOND THE DOORS MAY BE A MINIMUM OF 48".

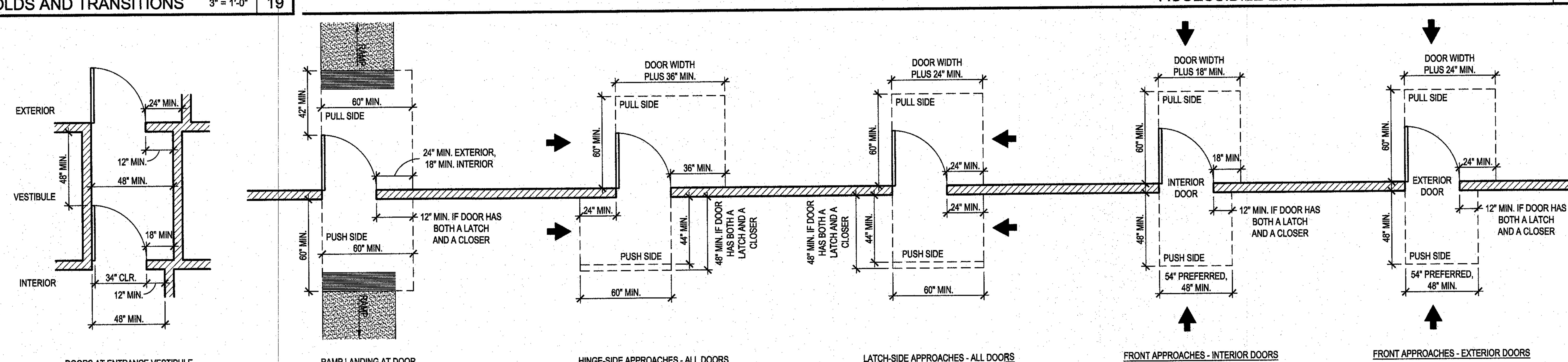

MANEUVERING CLEARANCES AT DOORS — 1/4" = 1'-0" — 8

TOTAL PARKING SPACES PROVIDED	MINIMUM ACCESSIBLE SPACES REQUIRED
1 TO 25	1
26 TO 50	2
51 TO 75	3
76 TO 100	4
101 TO 150	5
151 TO 200	6
201 TO 300	7
301 TO 400	8
401 TO 500	9
501 TO 1000	= 2% OF TOTAL
1001 AND OVER	20 + 1 FOR EACH 100, OR FRACTION THEREOF, OVER 1000

REQUIRED PARKING — C

5% OF SEATING AND STANDING SPACES AT DINING SURFACES SHALL BE ACCESSIBLE.

TOTAL NUMBER OF SEATS	MINIMUM ACCESSIBLE SEATS REQUIRED
1 TO 20	1
21 TO 40	2
41 TO 60	3
61 TO 80	4
81 TO 100	5
101 TO 120	6
121 TO 140	7
141 TO 160	8
161 TO 180	9
181 TO 200	10

REQUIRED SEATING — D

VMI architecture
Design · Planning · Interiors
637 5th Avenue San Rafael, CA 94901
415-451-2500 415-451-2595 fax
www.vmiarchitecture.com

VMI JOB NUMBER
1856

LICENSED ARCHITECT
HUGH EDWARD MURPHY
No. C17928
REN. 10/31/19
STATE OF CALIFORNIA

CITY OF SAN JOSE
BUILDING DIVISION
B.P. # ______
DATE ______

RECORD DATES
DD SUBMITTAL -
BLDG. SUBMITTAL -
BID SET -
CONTRACT SET -

REVISIONS

CLIENT
Tambro Inc.
2780 Alum Rock Ave.
San Jose, CA 95127
STORE #024525

TACO BELL REMODEL
2770 Alum Rock Ave
San Josel, CA 95127
APN#: 484-20-037-2

TACO BELL
MOD EXPL
MID TERM

ACCESSIBILITY ENTRANCE DETAILS

ADA-1

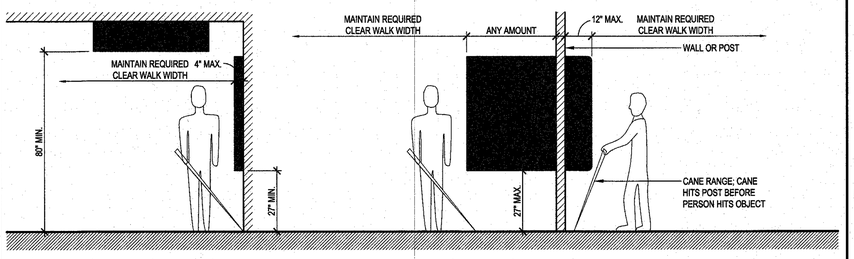

PROTRUDING OBJECTS 3/8" = 1'-0" | 13

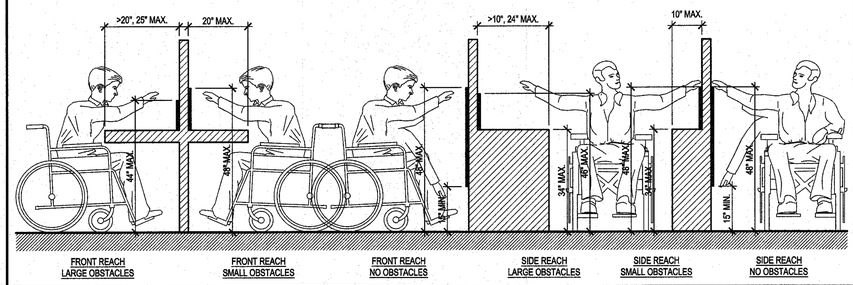

ACCESSIBLE REACH RANGE 1/2" = 1'-0" | 5

DISABLED ACCESSIBILITY NOTES AND DETAILS IN DRAWINGS ADA-1, ADA-2, AND ADA-3 ARE INTENDED TO SHOW GENERAL ACCESSIBLE COMPLIANCE AND NOT ALL NOTES OR DETAILS MAY BE APPLICABLE TO THIS PROJECT.

REFER TO PROJECT-SPECIFIC PLANS AND SHEETS FOR EXTENT OF WORK REQUIRING COMPLIANCE WITH ACCESSIBILITY REQUIREMENTS.

SEE PROJECT-SPECIFIC PLANS AND SHEETS FOR SPECIFIC DETAILS AS APPLICABLE.

IN NO CASE ARE REQUIREMENTS ON ADA-1, ADA-2, OR ADA-3 TO BE OVER-RIDDEN.

ADDITIONAL NOTE | B

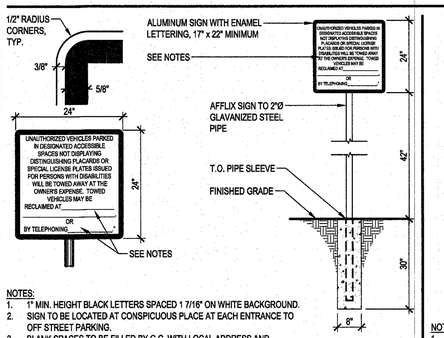

NOTES:
1. 1" MIN. HEIGHT BLACK LETTERS SPACED 1 7/16" ON WHITE BACKGROUND.
2. SIGN TO BE LOCATED AT CONSPICUOUS PLACE AT EACH ENTRANCE TO OFF STREET PARKING.
3. BLANK SPACES TO BE FILLED BY G.C. WITH LOCAL ADDRESS AND TELEPHONE NUMBER AS A PERMANENT PART OF SIGN.

TOW AWAY SIGN 1/2" = 1'-0" | 18

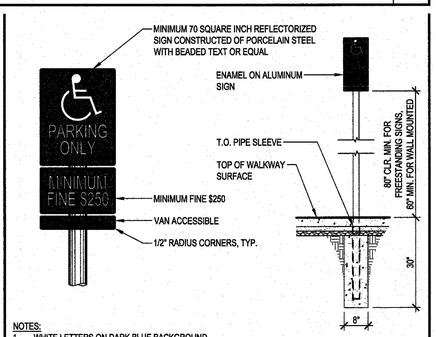

NOTES:
1. WHITE LETTERS ON DARK BLUE BACKGROUND.
2. CENTER SIGN AT INTERIOR END OF PARKING STALL.

PARKING SIGNAGE 1/2" = 1'-0" | 14

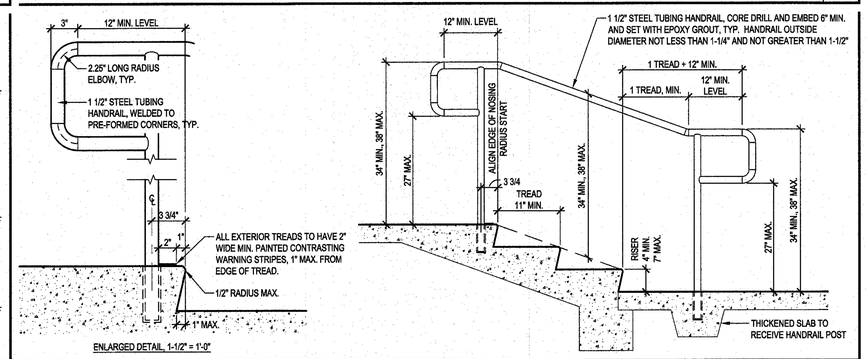

STAIRCASE HAND RAIL 3/4" = 1'-0" | 6

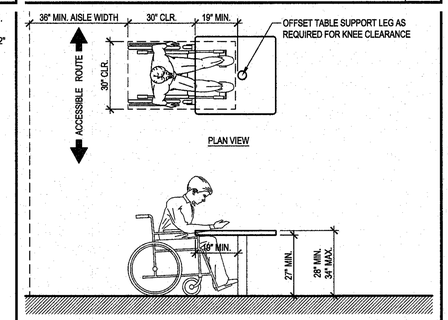

NOTE: MAINTAIN 44" MIN. CLEAR AISLE EGRESS PATHS TO EXIT DOORS.

ACCESSIBLE SEATING - WHEELCHAIR 3/8" = 1'-0" | 2

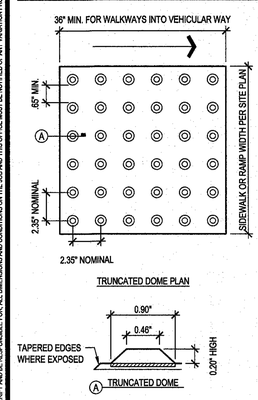

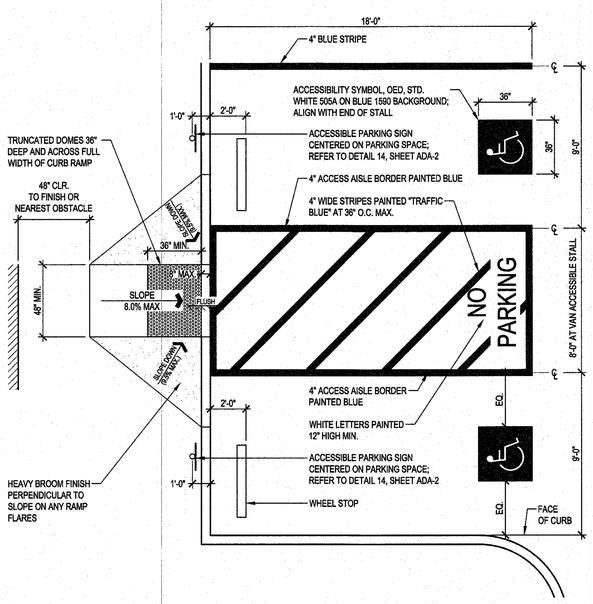

NOTES:
1. CONFIGURATION OF RAMP AND SURROUNDING CURBS MAY VARY.
2. PAVEMENT AREA WITHIN DISABLED PARKING STALL AND LOADING ZONE TO HAVE A SLOPE OF 1.5% MAXIMUM.
3. ADDITIONAL SIGNAGE MAY BE REQUIRED.
4. ACESSIBILITY SYMBOL PAINTED IN PARKING STALL MUST BE VISIBLE WHEN A VEHICLE IS PROPERLY PARKED.
5. TRUNCATED DOMES MAT (YELLOW) PATTERN TO BE PLACED ACROSS WIDTH OF WALKWAY FOR 36" MIN. LEADING INTO VEHICULAR WAY.

ACCESSIBLE PARKING SPACE 1/4" = 1'-0" | 16

RAMP & HANDRAIL GENERAL NOTES:
1. ALL RAMPS MUST MEET HANDRAIL AND CURB REQUIREMENTS.
2. MAXIMUM HORIZONTAL DISTANCE OF EACH RAMP VARIES.
3. ALL RAMPS AND LANDINGS MUST MEET GROOVING AND/OR TRUNCATED DOME WARNING STRIP REQUIREMENTS.
4. OPENINGS IN GUARDS SHALL HAVE BALUSTERS SUCH THAT A 4-INCH-DIAMETER SPHERE CANNOT PASS THROUGH ANY OPENING.
5. ALL HANDRAILS AND GUARDS SHALL BE HOT DIP GALVANIZED STEEL PIPES AND PAINTED A DARK BRONZE COLOR UNLESS OTHERWISE NOTED. CORE SET HANDRAIL AND GUARD POLES INTO CONCRETE CURBS OR SLABS A MINIMUM OF 6" AND SET WITH GROUT.

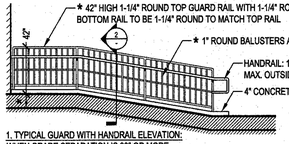

1. TYPICAL GUARD WITH HANDRAIL ELEVATION: WHEN GRADE SEPARATION IS 30" OR MORE

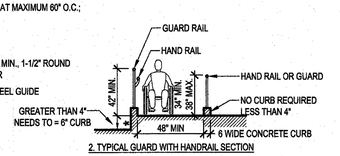

2. TYPICAL GUARD WITH HANDRAIL SECTION

* PROVIDE ROUND TOP GUARD RAIL WHERE GRADE SEPARATION EXCEEDS 29"; RAMPS OR LANDING MORE THAN 30 INCHES ABOVE ADJACENT GRADE OR FLOOR BELOW SHALL HAVE BALUSTERS SPACED SUCH THAT A 4-INCH-DIAMETER SPHERE CANNOT PASS THROUGH ANY OPENING.

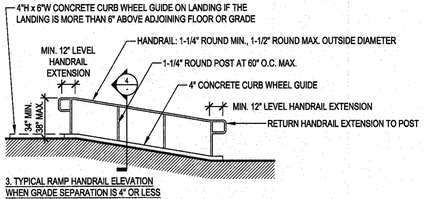

3. TYPICAL RAMP HANDRAIL ELEVATION WHEN GRADE SEPARATION IS 4" OR LESS

OPTION TO USE BOTTOM RAIL < 4" FROM RAMP SURFACE IN LIEU OF CURB

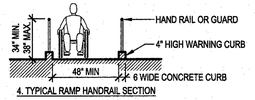

4. TYPICAL RAMP HANDRAIL SECTION

RAMP NOTES:
1. WHEN DOOR SWINGS ONTO LANDING - 42" MIN. PLUS DOOR WIDTH.
2. MAXIMUM HORIZONTAL DISTANCE OF EACH RAMP AND RUN VARY

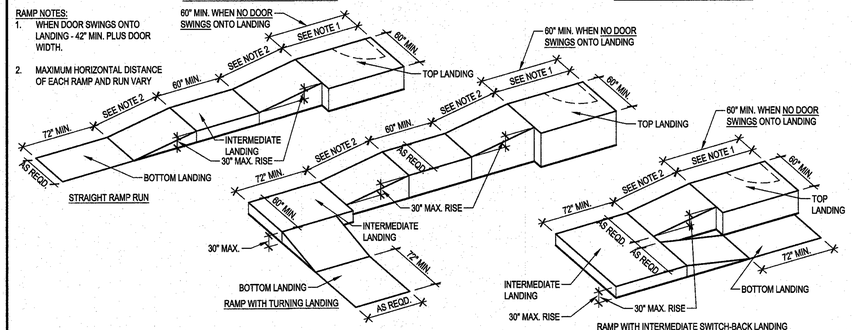

RAMPS 3/16" = 1'-0" | 8

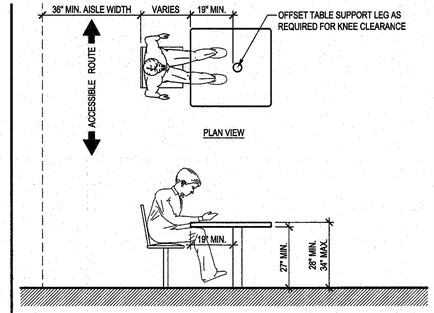

NOTE: MAINTAIN 44" MIN. CLEAR AISLE EGRESS PATHS TO EXIT DOORS.

ACCESSIBLE SEATING - FIXED CHAIRS 3/8" = 1'-0" | 3

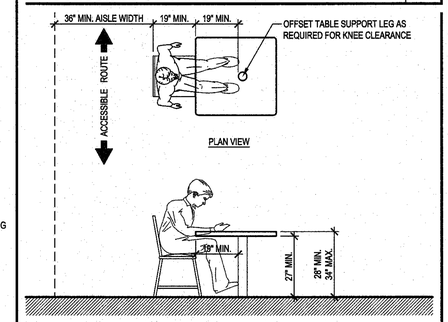

NOTE: MAINTAIN 44" MIN. CLEAR AISLE EGRESS PATHS TO EXIT DOORS.

ACCESSIBLE SEATING - LOOSE CHAIRS 3/8" = 1'-0" | 4

VMI architecture
Design · Planning · Interiors
637 5th Avenue San Rafael, CA 94901
415-451-2500 415-451-2595 fax
www.vmiarchitecture.com

VMI JOB NUMBER
1856

LICENSED ARCHITECT
HUGH EDWARD MURPHY
No. C17828
REN. 10/31/19
STATE OF CALIFORNIA

CITY OF SAN JOSE BUILDING DIVISION
B.P. #
DATE

RECORD DATES
DD SUBMITTAL -
BLDG. SUBMITTAL -
BID SET -
CONTRACT SET -

REVISIONS

CLIENT
Tambro Inc.
2780 Alum Rock Ave.
San Jose, CA 95127
STORE #024525

TACO BELL REMODEL
2770 Alum Rock Ave
San Josel, CA 95127
APN#: 484-20-037-2

TACO BELL
MOD EXPL
MID TERM

ACCESSIBLE REACH AND PATH DETAILS

ADA-2

W:\Data\Tambro\1856_Tambro_San.Jose_AlumRock_024525\03_cd_current\012_1856_ADA-2.dwg By: ARCHASSOCIATE01 Saved on:7/22/2019 1:45:15 PM
ALL IDEAS, DESIGNS, ARRANGEMENTS OR PLANS INDICATED OR REPRESENTED BY THIS DRAWING ARE OWNED BY, AND THE PROPERTY OF THE ARCHITECT. NONE OF SUCH IDEAS, DESIGNS, ARRANGEMENTS OR PLANS SHALL BE USED BY OR DISCLOSED TO ANY PERSON, FIRM OR CORPORATION FOR ANY PURPOSE WHATSOEVER WITHOUT THE WRITTEN PERMISSION OF PROJECT ARCHITECT.
WRITTEN DIMENSION ON THESE DRAWINGS SHALL HAVE PRECEDENCE OVER SCALE DIMENSIONS. CONTRACTORS SHALL VERIFY AND BE RESPONSIBLE FOR, ALL DIMENSIONS AND CONDITIONS ON THE JOB AND THIS OFFICE MUST BE NOTIFIED OF ANY VARIATION FROM THE DEVIATION FROM THE DIMENSIONS AND CONDITIONS SHOWN BY THESE DRAWINGS. SHOP DETAILS OF ADEQUATE SCALE MUST BE SUBMITTED TO THIS OFFICE FOR APPROVAL BEFORE PROCEEDING WITH FABRICATION ON ITEMS SO NOTED.

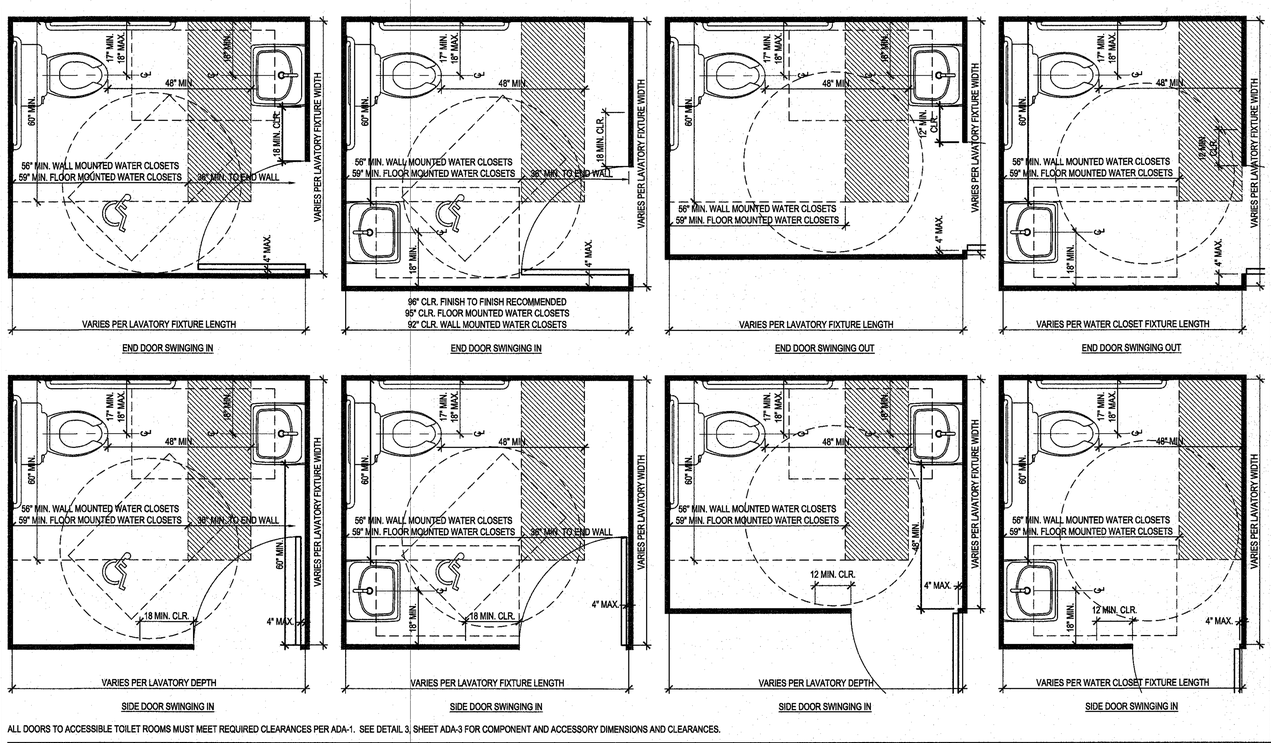

ALL DOORS TO ACCESSIBLE TOILET ROOMS MUST MEET REQUIRED CLEARANCES PER ADA-1. SEE DETAIL 3, SHEET ADA-3 FOR COMPONENT AND ACCESSORY DIMENSIONS AND CLEARANCES.

SINGLE ACCOMODATION TOILET ROOM LAYOUTS 1/2" = 1'-0" | 10

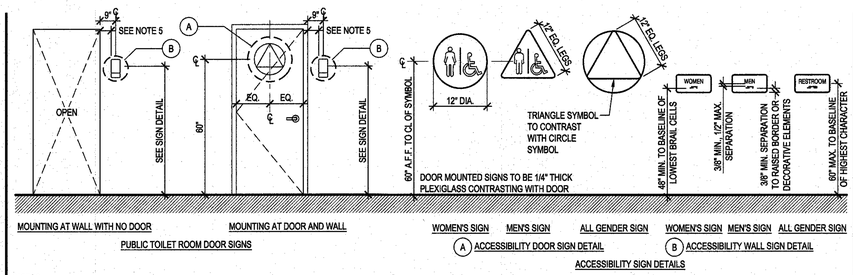

NOTES:
1. SIGNS TO MEET ALL LOCAL, A.D.A., CA TITLE-24, AND U.B.C. CODE REQUIREMENTS.
2. MOUNT SIGNS WITH ADHESIVE ONLY AND CAULK EDGES WITH CLEAR SILICONE.
3. ALL CHARACTERS, BRAILLE AND PICTORAL SYMBOL SIGNS (PICTOGRAMS) TO BE RAISED. LETTERS AND NUMERALS SHALL BE RAISED 1/32", UPPERCASE, SANS SERIF TYPE AND ACCOMPANIED WITH GRADE 2 BRAILLE. RAISED CHARACTERS SHALL BE 5/8" HIGH MIN., 2" HIGH MAX.
4. CHARACTERS AND SIGNS SHALL BE INSTALLED ON THE WALL ADJACENT TO THE LATCH SIDE OF THE DOOR.
5. MOUNTING LOCATION ALLOWS A PERSON TO APPROACH WITHIN 3" OF THE SIGNAGE WITHOUT ENCOUNTERING PROTRUDING OBJECTS OR STANDING WITHIN THE SWING OF DOOR.

ACCESSIBLE TOILET DOOR SIGNS 3/8" = 1'-0" | 1

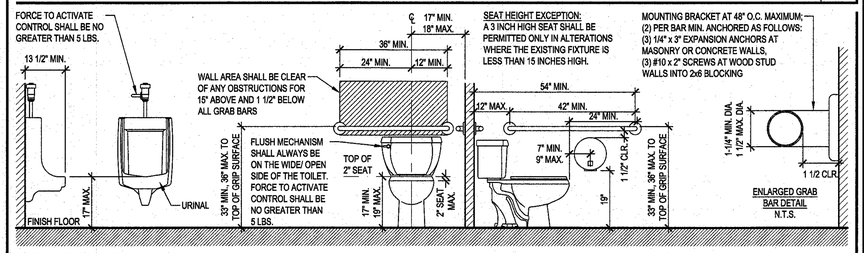

COAT HOOK SPEC: BOBRICK OR CHRISTY COMMERCIAL HARDWARE & SUPPLY WAREHOUSE #039-6529 OR SIMILAR ADA COMPLIANT HOOK. CHRISTYHARDWARE.COM 877-544-5400

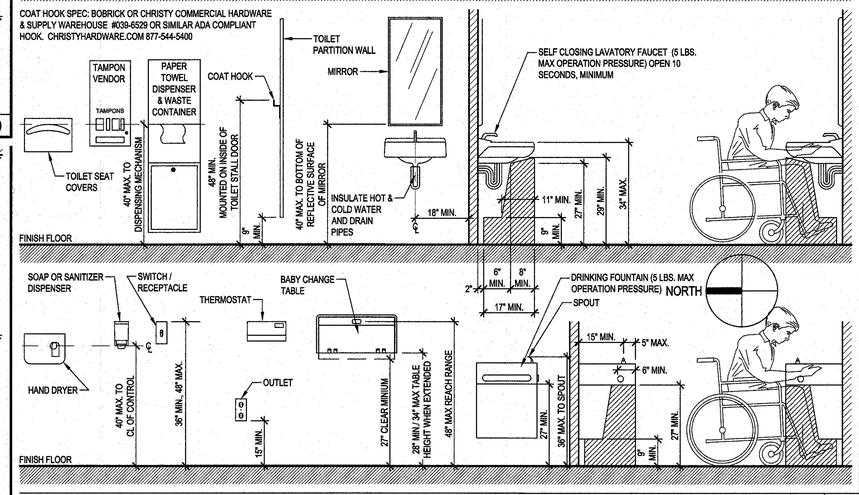

FIXTURES AND ACCESSORIES CLEARANCES 1/2" = 1'-0" | 3

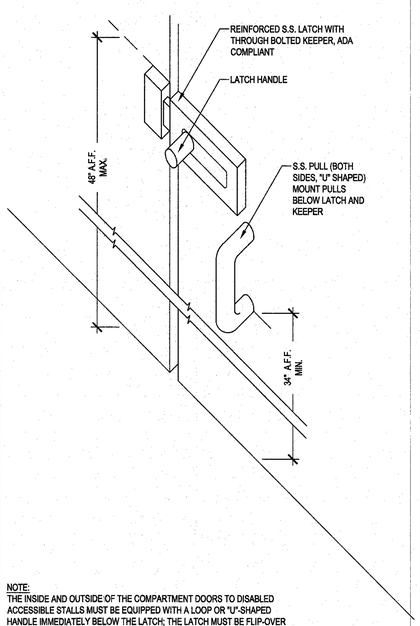

NOTE:
THE INSIDE AND OUTSIDE OF THE COMPARTMENT DOORS TO DISABLED ACCESSIBLE STALLS MUST BE EQUIPPED WITH A LOOP OR "U"-SHAPED HANDLE IMMEDIATELY BELOW THE LATCH; THE LATCH MUST BE FLIP-OVER STYLE, SLIDING OR OTHER HARDWARE NOT REQUIRING TIGHT GRASPING OR TWISTING.

SEE DOOR SCHEDULE AND DOOR NOTES WHERE APPLICABLE.

ACCESSIBLE STALL LATCH N.T.S. | 20

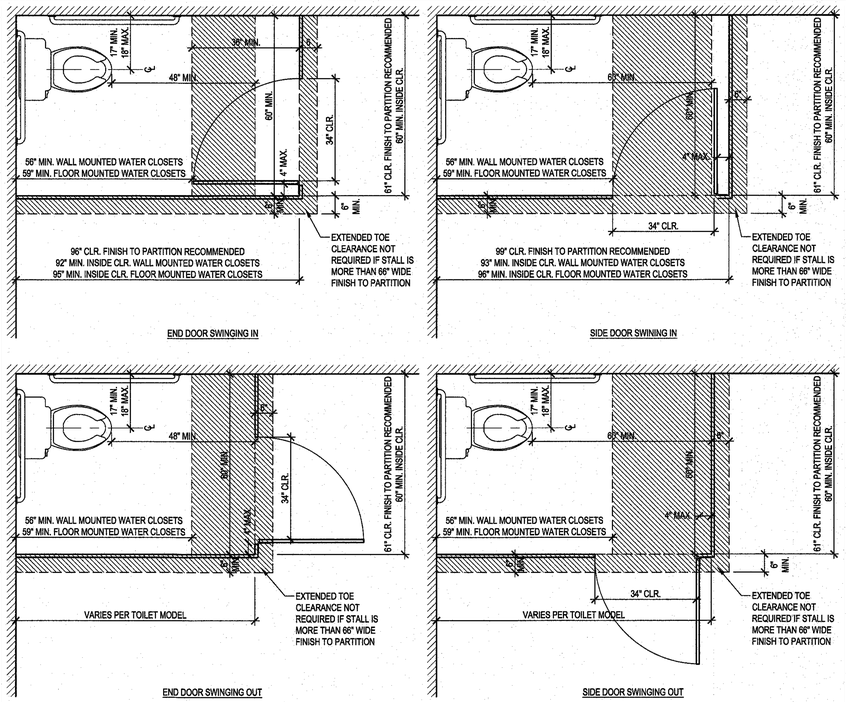

ALL DOORS TO ACCESSIBLE TOILET ROOMS AND TO ACCESSIBLE STALLS MUST MEET REQUIRED CLEARANCES PER ADA-1. SEE DETAIL 3, SHEET ADA-3 FOR COMPONENT AND ACCESSORY DIMENSIONS AND CLEARANCES.

ACCESSIBLE STALL LAYOUTS WITHIN MULTIPLE ACCOMODATION TOILET ROOMS 1/2" = 1'-0" | 12

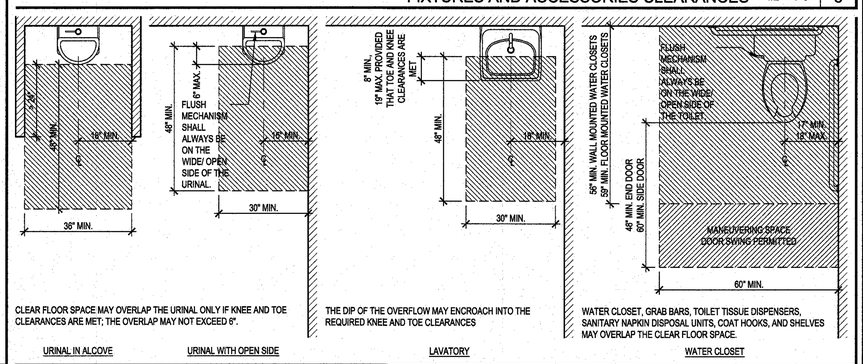

PLUMBING FIXTURE CLEAR FLOOR SPACE 1/2" = 1'-0" | 4

VMI architecture
Design · Planning · Interiors
637 5th Avenue San Rafael, CA 94901
415-451-2500 415-451-2595 fax
www.vmiarchitecture.com

VMI JOB NUMBER
1856

LICENSED ARCHITECT HUGH EDWARD AURDY No. C17928 REN. 10/31/19 STATE OF CALIFORNIA

CITY OF SAN JOSE BUILDING DIVISION
B.P. #
DATE

RECORD DATES
DD SUBMITTAL -
BLDG. SUBMITTAL -
BID SET -
CONTRACT SET -

REVISIONS

CLIENT
Tambro Inc.
2780 Alum Rock Ave.
San Jose, CA 95127
STORE #024525

TACO BELL REMODEL
2770 Alum Rock Ave
San Josel, CA 95127
APN#: 484-20-037-2

TACO BELL
MOD EXPL
MID TERM

ACCESSIBLE RESTROOMS AND DETAILS

ADA-3

W:\Data\Tambro\1856_Tambro_SanJose_AlumRock_02452\03_cd_current\013_1856_ADA-3.dwg By: ARCHASSOCIATE01 Saved on:7/22/2019 1:44:53 PM
ALL IDEAS, DESIGNS, ARRANGEMENTS AND PLANS INDICATED BY THIS DRAWING ARE OWNED BY, AND THE PROPERTY OF THIS OFFICE AND WERE CREATED, EVOLVED AND DEVELOPED FOR USE ON, AND IN CONNECTION WITH, THE SPECIFIED PROJECT. NONE OF SUCH IDEAS, DESIGNS, ARRANGEMENTS AND PLANS MAY BE USED BY OR DISCLOSED TO ANY PERSON, FIRM OR CORPORATION FOR ANY PURPOSE WHATSOEVER WITHOUT THE WRITTEN PERMISSION OF PROJECT ARCHITECT.
WRITTEN DIMENSIONS ON THESE DRAWINGS SHALL HAVE PRECEDENCE OVER SCALE DIMENSIONS. CONTRACTORS SHALL VERIFY AND BE RESPONSIBLE FOR ALL DIMENSIONS AND CONDITIONS ON THE JOB AND THIS OFFICE MUST BE NOTIFIED OF ANY VARIATION FROM THE DIMENSIONS AND CONDITIONS SHOWN BY THESE DRAWINGS.

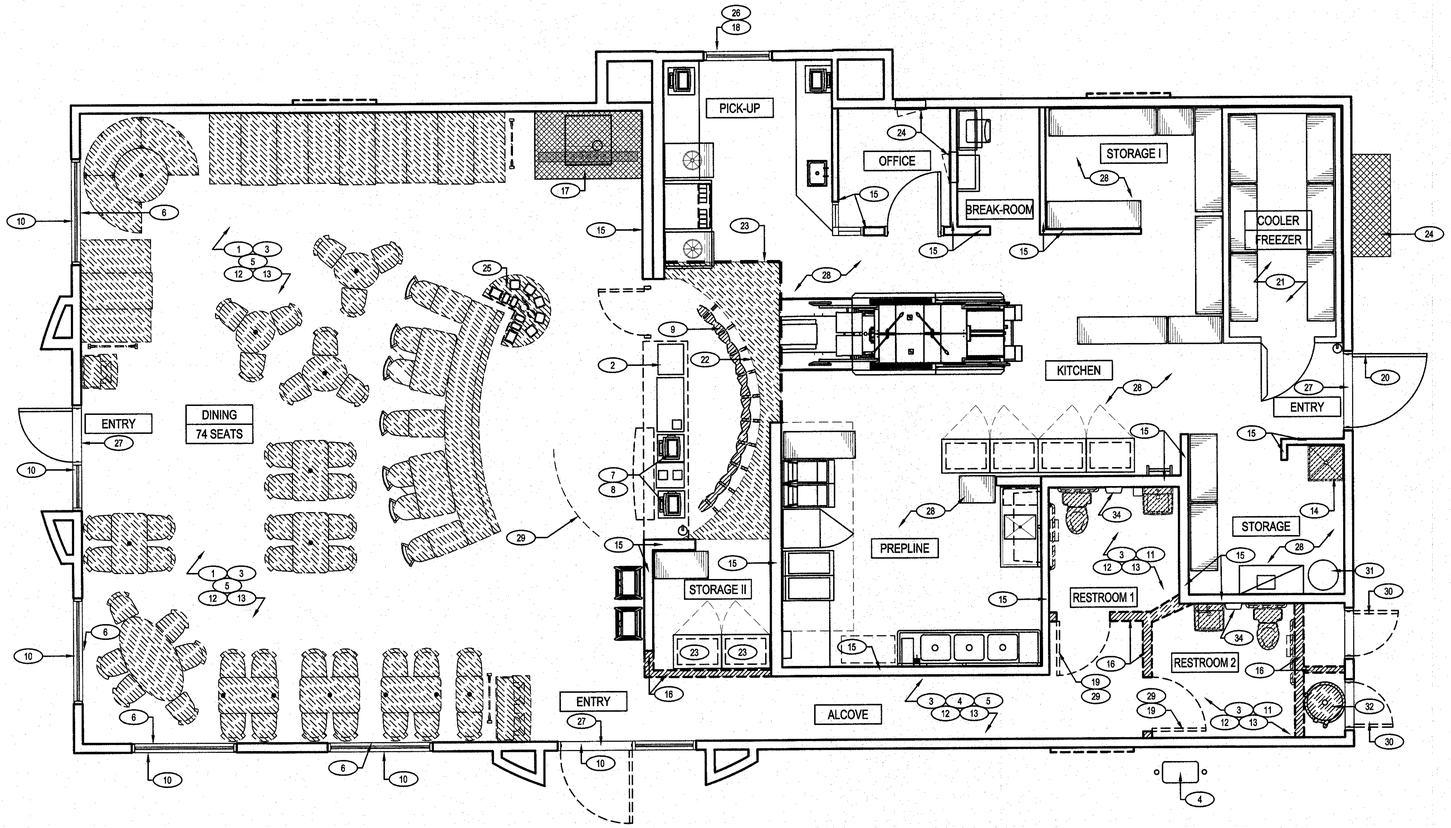

NORTH

DEMOLITION FLOOR PLAN 1/4" = 1'-0" A

TYPICAL EXISTING EXTERIOR WALL:
2x6 WOOD STUDS @16" O.C. w/ 1/2" PLYWOOD (EXP 1) SHEATHING.

TYPICAL EXISTING INTERIOR WALL TO REMAIN:
2x4 WOOD STUDS @16" O.C. (U.N.O.)

TYPICAL WALL DEMOLITION:
DEMO AS INDICATED (SEE KEY NOTES)

TYPICAL DEMOLITION:
ITEMS TO BE REMOVED.

TYPICAL REINSTALLATION:
ITEMS TO BE REMOVED AND SAVE FOR REINSTALLATION.

DEMOLITION LEGEND D

INSPECT INTERIOR AND EXTERIOR WALLS. REPLACE ANY DAMAGED SUBSTRATE WALLS ETC. INSPECT DINING ROOM WINDOWS & WALLS BELOW WINDOWS FOR EVIDENCE OF MOISTURE DAMAGE & IMPROPERLY INSTALLED FLASHING. VERIFY WITH OWNER.

ROOF RECOMMENDATIONS: INSPECTION OF EXISTING ROOF BY QUALIFIED ROOFER IS RECOMMENDED. REPLACE ROOF IF WARRANTED. VERIFY ALL ACTIONS WITH OWNER.

SEE SITE PLAN FOR ANY SITE DEMO WORK.

DRINK SYSTEM FRUTISTA MACHINE SHALL BE TEMPORARILY RELOCATED PER STORE MANAGERS DIRECTION BY AUTHORIZED TECHNICIANS. OWNER SHALL COORDINATE.

DEMOLITION NOTES C

(#) - KEYNOTE SYMBOL ON PLAN

1. REMOVE ALL DINING AREA SEATS, TABLES, TRASH ENCLOSURES, DIVIDER WALLS AND ARTWORK FROM DINING AND ALCOVE.
2. SAFE TO BE TEMPORARILY RELOCATED FOR THE DURATION OF CONSTRUCTION AND REMAIN OPERATIONAL. COORDINATE TEMPORARY LOCATION WITH OWNER.
3. REMOVE EXISTING WALL TILE, SUBSTRATE AND OTHER FINISHES IN DINING ROOM, SERVING AREA, CORRIDOR AND RESTROOM.
4. (E) GAS METER TO REMAIN.
5. PATCH CONCRETE SLAB AND CORE HOLES AS NEEDED WHERE POSTS WERE REMOVED. PREP FOR NEW FLOOR FINISHES.
6. (E) INTERIOR SUBSTRATE TO BE REMOVED BELOW EXISTING WINDOWS TO INSPECT FRAMING FOR DAMAGE. REPLACE IF REQUIRED.
7. (E) POS REGISTERS TO BE REMOVED, DISCONNECT FROM NETWORK WHEN TECHNICIAN IS PRESENT. RELOCATE DURING CONSTRUCTION.
8. REMOVE EXISTING COUNTER STRUCTURE COMPLETE. SEE NEW FLOOR PLAN FOR NEW COUNTER.
9. (E) MENU BOARD TO BE REMOVED. PREP FOR NEW DIGITAL MENUBOARD.
10. (E) STOREFRONT WINDOWS & FRAMES TO REMAIN. PROTECT DURING CONSTRUCTION.
11. EXISTING RESTROOM FIXTURES AND ACCESSORIES TO BE REMOVED AND SAVED FOR REINSTALLATION IF IN GOOD CONDITION. CAP PLUMBING WHERE NECESSARY.
12. REMOVE ALL FLOOR TILES AND TILE BASE IN DINING, ALCOVE AND RESTROOMS.
13. REPAIR WALL DAMAGE WHERE TILE AND TILE BASE ARE REMOVED.
14. (E) MOP SINK TO BE REMOVED.
15. (E) INTERIOR WALL TO REMAIN.
16. (E) INTERIOR WALLS TO BE REMOVED.
17. REMOVE EXISTING DRINK TABLE, PEPSI AND ICE MACHINES SAVE FOR REINSTALLATION.
18. (E) DRIVE-THRU WINDOW TO REMAIN.
19. EXISTING RESTROOM DOOR FRAMES TO BE REMOVED AND SAVED FOR REINSTALLATION.
20. REPAIR AND REPAINT (E) REAR DOOR AND HARDWARE.
21. (E) COOLER/ FREEZER TO REMAIN - NO WORK.
22. (E) MENUBOARD BULKHEAD TO BE SQUARED OFF.
23. PROTECT EXISTING EQUIPMENT FROM DUST AND DEBRIS. G.C. TO CONSTRUCT A TEMPORARY FLOOR TO CEILING BARRIER BEHIND (N) INTERIOR MENU BOARD BULKHEAD WALL. BARRIER SHALL BE CONSTRUCTED OUT OF PLYWOOD AND SEALED WITH PLASTIC SHEATHING TO MINIMIZE ANY DUST INFILTRATION INTO KITCHEN AREAS DURING CONSTRUCTION. PROVIDE A 3' X 6'-8" HINGED ACCESS DOOR.
24. (E) ELECTRICAL PANELS & MAIN SWITCH GEAR TO REMAIN.
25. (E) CONDIMENT CART TO BE REMOVED.
26. REMOVE PRICE CONFIRMATION IF IN POOR CONDITION.
27. G.C. TO VERIFY STOREFRONT DOOR AND THRESHOLD COMPLIES WITH ADA REQUIREMENTS. REPLACE IF NECESSARY.
28. (E) KITCHEN EQUIPMENT AND STORAGE TO REMAIN - NO WORK.
29. (E) QUEUE RAIL TO BE REMOVED AND CORE HOLES FILLED IN.
30. (E) DOOR TO BE REMOVED.
31. CO2 TANK TO REMAIN.
32. HOT WATER TANK TO BE REMOVED. CAP GAS IN CEILING.
33. REUSE EXISTING DOOR AND HARDWARE. MODIFY FRAME AS SHOWN ON 11 / A6-0.
34. REPLACE (E) ELECTRIC HAND DRYERS WITH (N).

KEY NOTES B

VMI architecture
Design · Planning · Interiors
637 5th Avenue San Rafael, CA 94901
415-451-2500 415-451-2595 fax
www.vmiarchitecture.com

VMI JOB NUMBER
1856

LICENSED ARCHITECT
HUGH EDWARD MURPHY
No. C17928
RN. 10/31/19
STATE OF CALIFORNIA

CITY OF SAN JOSE
BUILDING DIVISION
B.P. #
DATE

RECORD DATES
DD SUBMITTAL -
BLDG. SUBMITTAL -
BID SET -
CONTRACT SET -

REVISIONS

CLIENT
Tambro Inc.
2780 Alum Rock Ave.
San Jose, CA 95127
STORE #024525

TACO BELL REMODEL
2770 Alum Rock Ave
San Josel, CA 95127
APN#: 484-20-037-2

TACO BELL
MOD EXPL
MID TERM

DEMO
FLOOR PLAN
D1-0

W:\Data\Tambro\1856_Tambro_SanJose_AlumRock_024525\03_cd_current\210_1856_D1-0.dwg By: ARCHASSOCIATE01 Saved on:9/14/2019 1:58:39 PM
ALL IDEAS, DESIGNS, ARRANGEMENTS AND PLANS INDICATED BY THIS DRAWING ARE OWNED BY, AND THE PROPERTY OF THIS OFFICE AND WERE CREATED, EVOLVED AND DEVELOPED FOR USE ON, AND IN CONNECTION WITH, THE SPECIFIED PROJECT. NONE OF SUCH IDEAS, DESIGNS, ARRANGEMENTS AND PLANS MAY BE USED BY OR DISCLOSED TO ANY PERSON, FIRM OR CORPORATION FOR ANY PURPOSE WHATSOEVER WITHOUT THE WRITTEN PERMISSION OF PROJECT ARCHITECT.
WRITTEN DIMENSIONS ON THESE DRAWINGS SHALL HAVE PRECEDENCE OVER SCALED DIMENSIONS. CONTRACTORS SHALL VERIFY AND BE RESPONSIBLE FOR ALL DIMENSIONS AND CONDITIONS SHOWN BY THESE DRAWINGS. SHOP DETAILS OF ADEQUATE SCALE MUST BE SUBMITTED TO THIS OFFICE FOR APPROVAL BEFORE PROCEEDING WITH FABRICATION ON ITEMS SO NOTED.

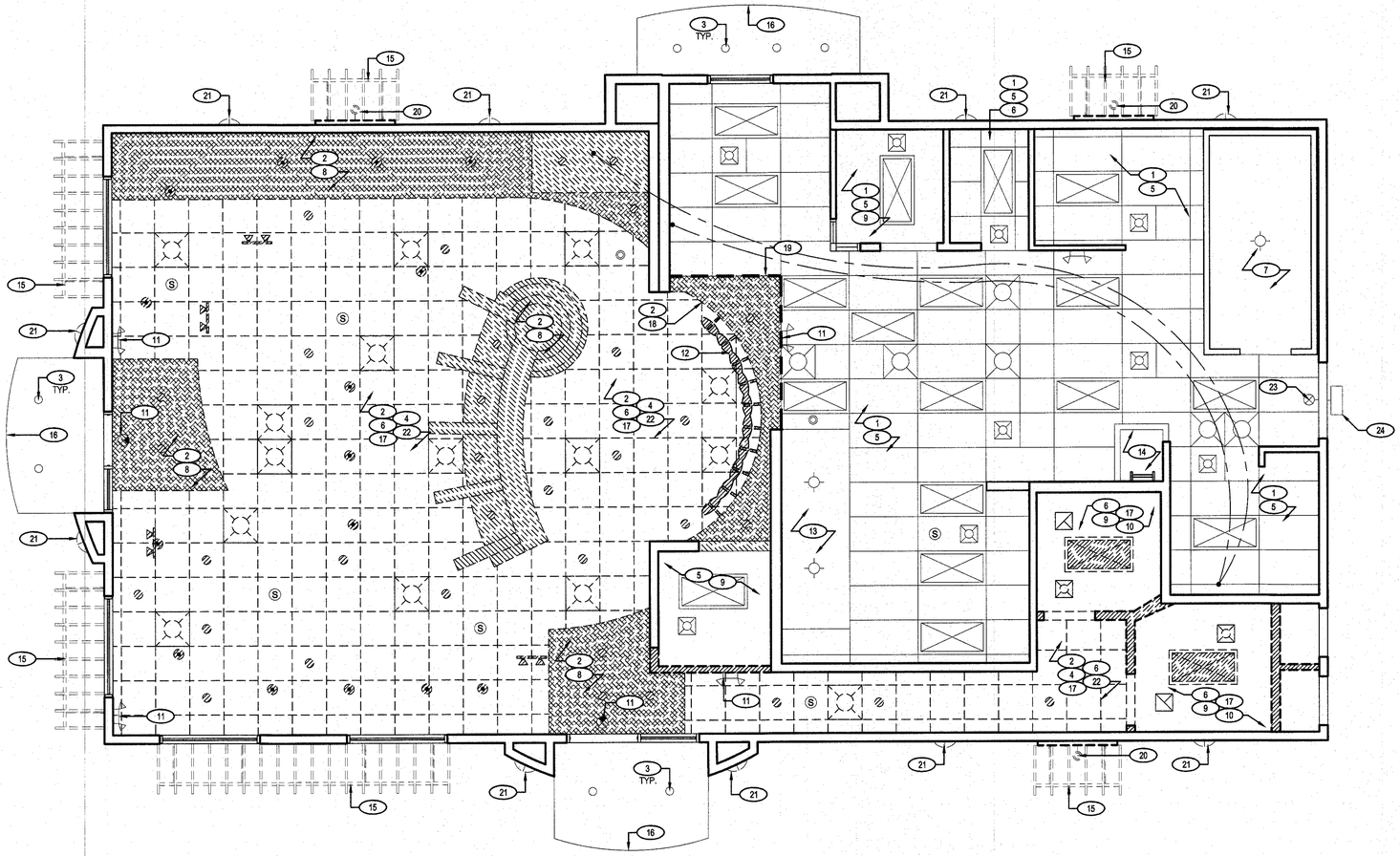

DEMOLITION REFLECTED CEILING PLAN 1/4" = 1'-0" A

A. LIGHTS TO BE REMOVED.

B. ITEMS TO BE REMOVED.

DEMOLITION LEGEND F

A. INSPECT INTERIOR AND EXTERIOR WALLS. REPLACE ANY DAMAGED SUBSTRATE WALLS ETC. INSPECT DINING ROOM WINDOWS & WALLS BELOW WINDOWS FOR EVIDENCE OF MOISTURE DAMAGE & IMPROPERLY INSTALLED FLASHING. VERIFY WITH OWNER.

B. ROOF RECOMMENDATIONS: INSPECTION OF EXISTING ROOF BY QUALIFIED ROOFER IS RECOMMENDED. REPLACE ROOF IF WARRANTED. VERIFY ALL ACTIONS WITH OWNER.

C. SEE SITE PLAN FOR ANY SITE DEMO WORK.

D. DRINK SYSTEM FRUTISTA MACHINE SHALL BE TEMPORARILY RELOCATED PER STORE MANAGERS DIRECTION BY AUTHORIZED TECHNICIANS. OWNER SHALL COORDINATE.

DEMOLITION NOTES E

(#) KEYNOTE SYMBOL ON PLAN

1. (E) LIGHT FIXTURES TO REMAIN IN KITCHEN, OFFICE, BREAK-ROOM AND STORAGE.
2. REMOVE (E) DOWNLIGHTS, PENDANTS AND DIRECTIONAL LIGHTS WITHIN IN DINING ROOM, SERVICE AREA AND ALCOVE.
3. REPLACE (E) EXTERIOR LIGHT BULBS IN CANOPIES WITH (N) 20 WATTS LED BULB. REFER TO DWG A7-1 FOR NEW REFLECTED CEILING PLAN.
4. REMOVE (E) CEILING GRID AND TILES IN DINING ROOM AND ALCOVE, REPAIR EXISTING T-BAR CEILING TO LIKE NEW CONDITION AND PAINT - PREP FOR NEW GRID AND TILES. REFER TO A7-2 FOR FINISH.
5. (E) CEILING TILES AND GRID IN KITCHEN, OFFICE, STORAGE TO REMAIN - NO WORK.
6. REMOVE (E) MECHANICAL SUPPLY / RETURN GRILLES. SEE REFLECTED CEILING PLAN A7-1. EXISTING DUCT WORK MAY REMAIN, VERIFY CONDITION, REPAIR REPLACE DUCT AS REQUIRED TO CONNECT WITH (E) HVAC.
7. (E) COOLER/ FREEZER & LIGHTING TO REMAIN - NO WORK.
8. REMOVE (E) SOFFIT ON DINING.
9. (E) GYP. BD. CEILING RESTROOMS, STORAGE AND OFFICE TO REMAIN. PATCH, REPAIR AND TEXTURE TO MATCH ANY AREAS THAT HAVE BEEN WORKED ON.
10. (E) FLUORESCENT LIGHT FIXTURES TO BE REMOVED IN THE RESTROOMS.
11. REMOVE EXISTING EMERGENCY EGRESS AND ILLUMINATED EXIT SIGN. SAVE FOR REINSTALLATION.
12. REMOVE (E) REVOLUTION MENU BOARD. PREP FOR NEW DIGITAL MENUBOARD.
13. (E) TYPE I HOOD TO REMAIN. NO WORK.
14. (E) ROOF LADDER TO REMAIN, HATCH TO REMAIN. NO WORK.
15. REMOVE (E) AWNINGS TO BE REMOVED FOR DISPOSAL. PATCH WALLS BEHIND AWNINGS.
16. (E) ENTRY AND DRIVE-THRU CANOPIES TO REMAIN. CLEAN AND PAINT. REFER TO A4-0 & A4-1 FOR COLOR SCHEDULE.
17. (E) SPEAKERS, SECURITY CAMERAS, SECURITY EQUIPMENT, SMOKE DETECTORS & OTHER CEILING MOUNTED ACCESSORIES IN DINING AREA, BATHROOMS, ALCOVE TO BE REMOVED AND STORED FOR REINSTALLATION.
18. (E) MENU BOARD BULKHEAD TO BE REMOVED. MODIFY TO SQUARED OFF AND (N) DIGITAL MENU BOARDS.
19. PROTECT (E) EQUIPMENT FROM DUST AND DEBRIS. GC TO CONSTRUCT A TEMPORARY FLOOR TO CEILING BARRIER BEHIND INTERIOR MENU BOARD BULKHEAD WALL. BARRIER SHALL BE CONSTRUCTED OUT OF PLYWOOD AND SEALED WITH PLASTIC SHEATHING TO MINIMIZE ANY DUST INFILTRATION INTO KITCHEN AREAS DURING CONSTRUCTION. PROVIDE A 3' x 6'-8" HINGED ACCESS DOOR.
20. REMOVE EXTERIOR ARTWORK AND DIRECTIONAL LIGHT SCONCE. (E) ELECTRICAL J-BOX TO REMAIN.
21. (E) EXTERIOR SCONCES TO BE REMOVED. ELECTRICAL J-BOX TO REMAIN.
22. (E) MECHANICAL SUPPLY / RETURN GRILLES TO REMAIN. EXISTING DUCT WORK MAY REMAIN, VERIFY CONDITION, REPAIR REPLACE DUCT AS REQUIRED TO CONNECT WITH (E) HVAC.
23. (E) ILLUMINATED EXIT LIGHT TO REMAIN.
24. (E) WALL PACK TO REMAIN.

KEY NOTES B

VMI architecture
Design · Planning · Interiors
637 5th Avenue San Rafael, CA 94901
415-451-2500 415-451-2595 fax
www.vmiarchitecture.com

VMI JOB NUMBER
1856

LICENSED ARCHITECT
HUGH EDWARD MURPHY
No. C17626
REN. 10/31/19
STATE OF CALIFORNIA

CITY OF SAN JOSE
BUILDING DIVISION
B.P. #
DATE

RECORD DATES
DD SUBMITTAL -
BLDG. SUBMITTAL -
BID SET -
CONTRACT SET -

REVISIONS

CLIENT
Tambro Inc.
2780 Alum Rock Ave.
San Jose, CA 95127
STORE #024525

TACO BELL REMODEL
2770 Alum Rock Ave
San Josel, CA 95127
APN#: 484-20-037-2

TACO BELL
MOD EXPL
MID TERM

DEMOLITION REFLECTED CEILING PLAN

D2-0

W:\Data\Tambro\1856_Tambro_SanJose_AlumRock_024525\03_cd_current\220_1856_D2-0.dwg By: ARCHASSOCIATE01 Saved on:6/14/2019 2:45:25 PM
ALL IDEAS, DESIGNS, ARRANGEMENTS AND PLANS INDICATED OR REPRESENTED BY THESE DRAWINGS, WHETHER OR NOT EXECUTED, ARE THE EXCLUSIVE PROPERTY OF VMI ARCHITECTURE. THEY ARE NOT TO BE USED BY OR DISCLOSED TO ANY PERSON, FIRM OR CORPORATION FOR ANY PURPOSE WHATSOever WITHOUT THE WRITTEN PERMISSION OF PROJECT ARCHITECT.
NOTE: THE CONTRACTOR SHALL VERIFY ALL DIMENSIONS AND CONDITIONS SHOWN BY THESE DRAWINGS. SHOP DETAILS OF ADEQUATE SCALE MUST BE SUBMITTED TO THIS OFFICE FOR APPROVAL BEFORE PROCEEDING WITH FABRICATION ON ITEMS SO NOTED.
ALL DIMENSIONS AND CONDITIONS SHOWN ON THE DRAWINGS ARE TO BE VERIFIED BY THE CONTRACTOR. VERIFY AS-BUILT CONDITIONS AND DIMENSIONS AND CONDITIONS ON THE JOB AND THIS OFFICE MUST BE NOTIFIED OF ANY VARIATION FROM THE DIMENSIONS AND CONDITIONS SHOWN ON THESE DRAWINGS.

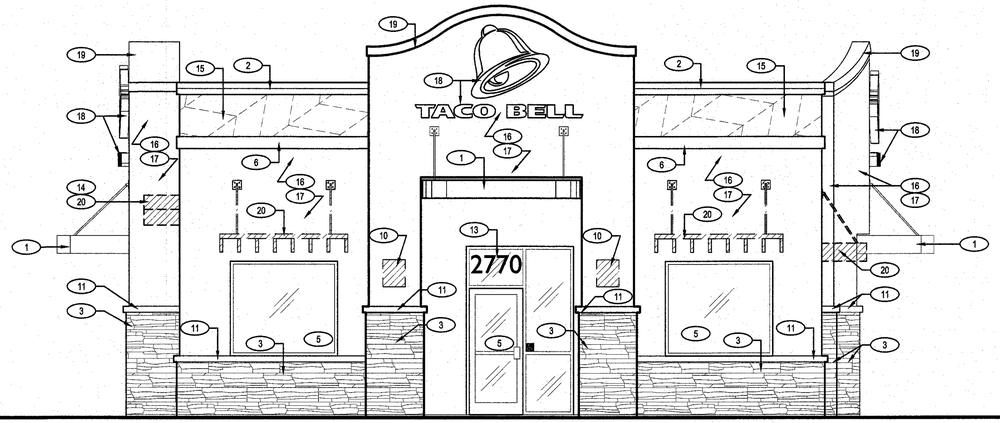

EXISTING NORTH ELEVATION 1/4" = 1'-0" | 1

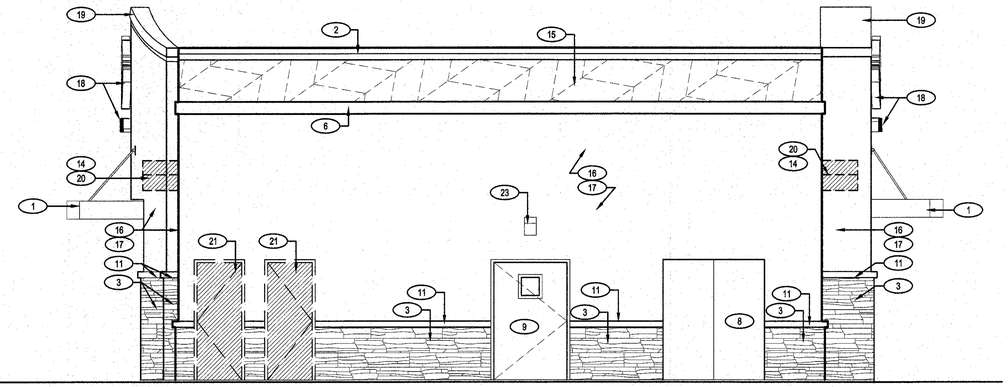

EXISTING SOUTH ELEVATION 1/4" = 1'-0" | 2

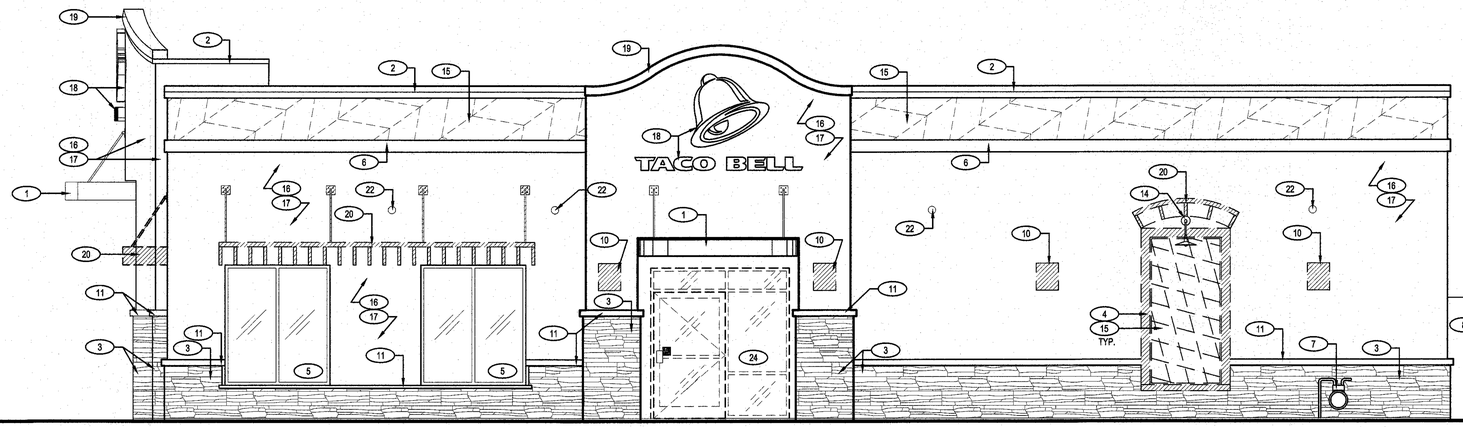

EXISTING WEST ELEVATION 1/4" = 1'-0" | 3

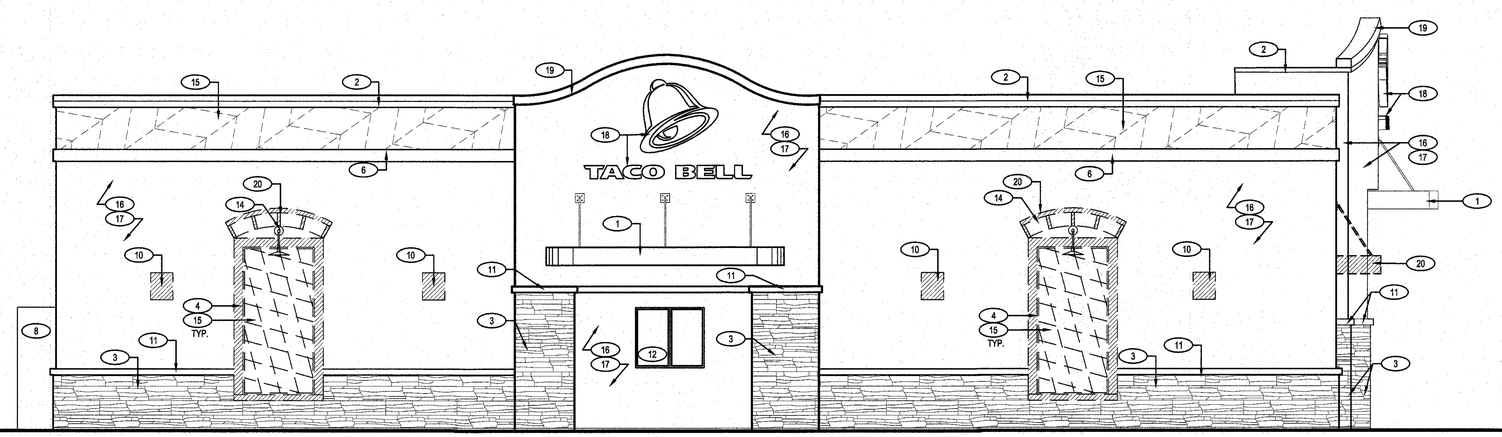

EXISTING EAST ELEVATION 1/4" = 1'-0" | 4

A. ITEMS TO BE REMOVED.

DEMOLITION LEGEND | B

(#) - KEYNOTE SYMBOL ON PLAN

1. (E) CANOPIES TO REMAIN, CLEAN AND PAINT.
2. (E) GALV. METAL CAP FLASHING - PRIME & PAINT.
3. (E) STONE TO REMAIN. PATCH AND REPAIR AS REQUIRED.
4. EXTERIOR ARTWORK LOCATIONS TO BE REMOVED. RE-STUCCO SO SURFACE IS HOMOGENEOUS.
5. (E) DOORS AND STOREFRONT TO REMAIN. PROTECT DURING REMODEL.
6. (E) PAINTED ACCENT BAND TO REMAIN.
7. (E) GAS METER NO WORK.
8. (E) MAIN SWITCH GEAR TO REMAIN.
9. (E) SERVICE DOOR & HARDWARE TO REMAIN. REPAIR AND REPAINT.
10. (E) EXTERIOR LIGHTING TO BE REMOVED. (E) JUNCTION BOX TO REMAIN AND ALIGN WITH WALL SCONCE J-BOXES.
11. WAINSCOT CAP TO REMAIN.
12. (E) DRIVE-THRU WINDOW TO REMAIN.
13. (E) ADDRESS NUMERALS SHALL REMAIN.
14. (E) DIRECTIONAL LIGHT FIXTURE TO BE REMOVED.
15. INFILL GROOVES IN EXISTING CEMENT PLASTER AND PAINT.
16. PREP ENTIRE BUILDING FOR NEW EXTERIOR PAINT.REFER TO DWG A4-0.
17. PATCH AND REPAIR CEMENT PLASTER AS NEEDED.
18. (E) BUILDING SIGNS TO REMAIN.
19. (E) ARCH TO REMAIN. PREP FOR NEW PAINTING.
20. (E) TRELLIS TO BE REMOVED. PREP AND FILL IN ANY HOLES.
21. (E) EQUIPMENT DOORS TO BE REMOVED. PATCH REPAIR TO MATCH EXISTING.
22. (E) ROOF DRAIN, RAIN WATER LEADER, AND OVERFLOW TO REMAIN.
23. (E) WALL PACK TO REMAIN.
24. REUSE EXISTING DOOR AND HARDWARE. MODIFY FRAME AS SHOWN WITH NEW TEMP GLASS 10 / A6-0.

KEYNOTES | A

VMI architecture
Design · Planning · Interiors
637 5th Avenue San Rafael, CA 94901
415-451-2500 415-451-2595 fax
www.vmiarchitecture.com

VMI JOB NUMBER
1856

LICENSED ARCHITECT
HUGH EDWARD MURPHY
No. C17928
RE. 10/31/19
STATE OF CALIFORNIA

CITY OF SAN JOSE
BUILDING DIVISION
B.P. #
DATE

RECORD DATES

DD SUBMITTAL	-
BLDG. SUBMITTAL	-
BID SET	-
CONTRACT SET	-

REVISIONS

CLIENT
Tambro Inc.
2780 Alum Rock Ave.
San Jose, CA 95127
STORE #024525

TACO BELL REMODEL
2770 Alum Rock Ave
San Josel, CA 95127
APN#: 484-20-037-2

TACO BELL
MOD EXPL
MID TERM

DEMO
ELEVATIONS

D3-0

W:\Data\Tambro\1856_Tambro_San.Jose_AlumRock_024525\03_cd_current\240_1856_D3-0.dwg By: ARCHASSOCIATE01 Saved on:6/14/2019 11:40:37 AM
ALL IDEAS, DESIGNS, ARRANGEMENTS AND PLANS INDICATED BY THIS DRAWING ARE OWNED BY, AND THE PROPERTY OF THIS OFFICE AND WERE CREATED, EVOLVED AND DEVELOPED FOR USE ON, AND IN CONNECTION WITH, THE SPECIFIED PROJECT. NONE OF SUCH IDEAS, DESIGNS, ARRANGEMENTS OR PLANS SHALL BE USED BY OR DISCLOSED TO ANY PERSON, FIRM OR CORPORATION FOR ANY PURPOSE WHATSOEVER WITHOUT THE WRITTEN PERMISSION OF PROJECT ARCHITECT.
WRITTEN DIMENSIONS ON THESE DRAWINGS SHALL HAVE PRECEDENCE OVER SCALE DIMENSIONS. CONTRACTORS SHALL VERIFY AND BE RESPONSIBLE FOR, ALL DIMENSIONS AND CONDITIONS ON THE JOB AND THIS OFFICE MUST BE NOTIFIED OF ANY VARIATION FROM THE DIMENSIONS AND CONDITIONS SHOWN BY THESE DRAWINGS. SHOP DETAILS OF ADEQUATE SCALE MUST BE SUBMITTED TO THIS OFFICE FOR APPROVAL BEFORE PROCEEDING WITH FABRICATION ON ITEMS SO NOTED.

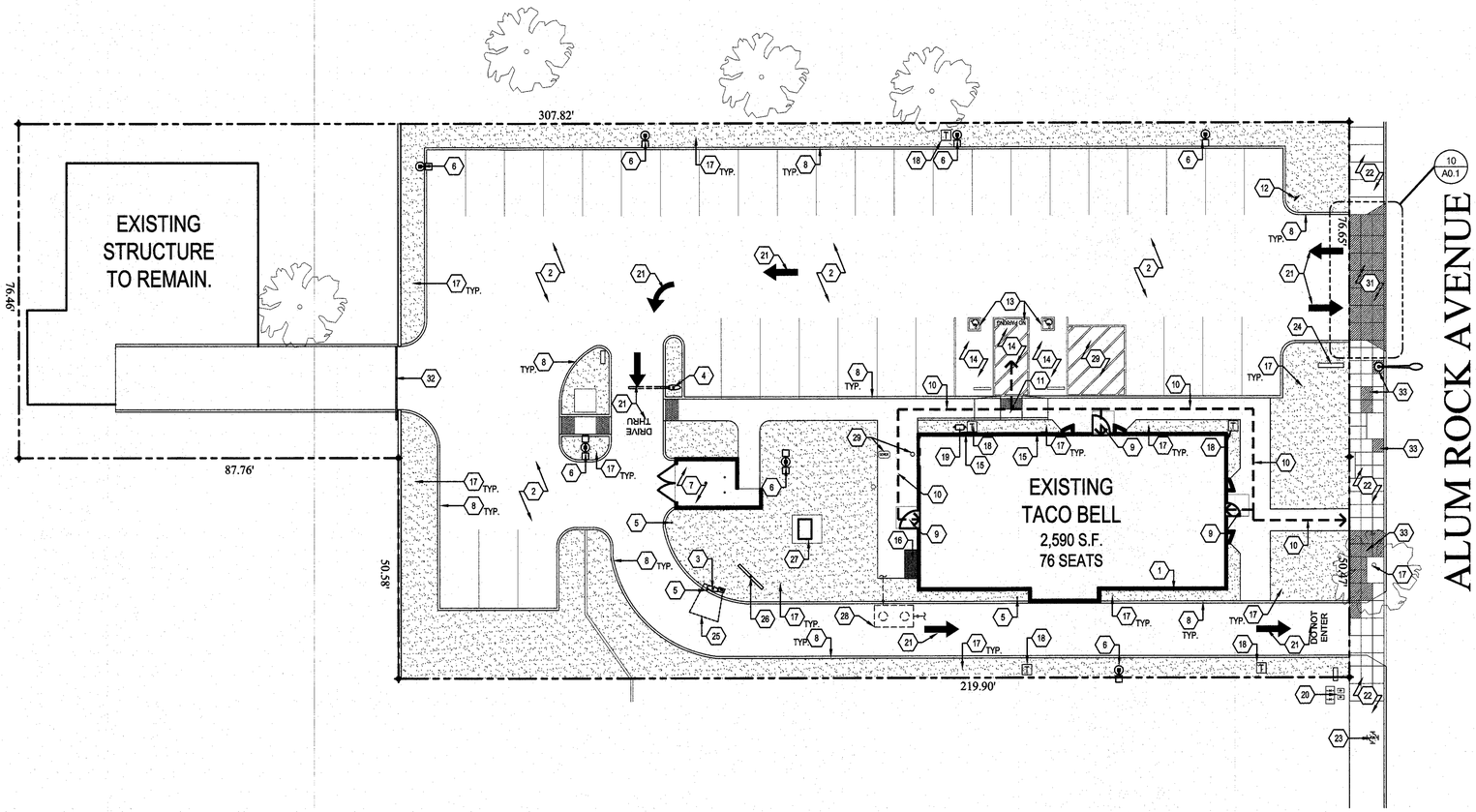

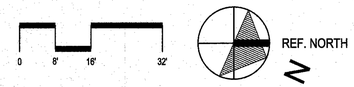

SITE PLAN 1/16" = 1'-0" A

(#) KEYNOTE SYMBOL ON PLAN

1. LINE OF (E) BUILDING.
2. (E) TACO BELL ASPHALT PARKING. NO REDUCTION IN PARKING SPACES. G.C. TO SLURRY, SEAL AND RE-STRIPE ENTIRE ASPHALT PARKING AREA AND DRIVE-THRU AS INDICATED/ PARKING STRIPPING TO CITY STANDARDS. NOTE - NO SEAL SHALL BE APPLIED TO CONCRETE AREAS.
3. (E) SPEAKER PEDESTAL AND O.C.B. TO REMAIN.
4. (N) DRIVE-THRU CLEARANCE BAR. SEE DETAIL 2 & 12/A0-1 FOR FOOTING. Separate Permit
5. (E) BOLLARD TO BE REPAINTED, TYPICAL FOR ALL ON-SITE BOLLARDS.
6. (E) SITE LIGHT TO REMAIN. REPAINT (E) POLES TO MATCH (E) POLE COLOR.
7. (E) TRASH ENCLOSURE REPAINT TO MATCH MAIN BUILDING COLOR.
8. (E) CONCRETE CURB TO REMAIN.
9. (E) PAVEMENT SURFACE AT ENTRY DOORS SHALL HAVE A SLOPE THAT DOES NOT EXCEED 2% SLOPE IN ANY DIRECTION FOR 60". LANDING TO EXTEND 24" ON STRIKE SIDE OF DOOR.
10. (E) ADA ACCESSIBLE PATH OF TRAVEL. CROSS SLOPE ALONG PATH NOT TO EXCEED 2% AND SLOPE IN DIRECTION OF TRAVEL NOT TO EXCEED 5%.
11. (E) ADA RAMP TO REMAIN. VERIFY CONFORMS WITH DETAIL 16/ADA-2 CORRECT AS REQUIRED.
12. (N) TOW AWAY SIGNS FOR UNAUTHORIZED VEHICLES FOR ADA SPACES.
13. REPAINT (E) ADA LOADING ZONE STRIPPING PARKING SYMBOLS AND "NO PARKING".
14. (E) ADA PARKING. CONTRACTOR TO VERIFY IF LESS THAN 2% SLOPE IN ANY DIRECTION. G.C. TO RE-GRADE AND EXTEND CONCRETE SURFACE TO ATTAIN COMPLIANCE AS NECESSARY. REFER TO DETAIL 16/ADA-2 FOR REFERENCE.
15. (E) VAN ACCESSIBLE SIGNAGE ON WALL. REPLACE WITH SAME. SEE DETAIL 14/ADA-2.
16. REPAINT (E) ELECTRICAL SWITCHGEAR TO MATCH BUILDING COLOR.
17. (E) TREE & (E) LANDSCAPE TO REMAIN.
18. (E) TRASH RECEPTACLES TO REMAIN.
19. (E) GAS METER TO REMAIN.
20. (E) WATER METER AND BACKFLOW TO REMAIN.
21. (E) ARROWS AND WORDING TO BE REPAINTED - EPOXY TRAFFIC PAINT.
22. (E) CITY SIDEWALKS TO REMAIN.
23. (E) FIRE HYDRANT TO REMAIN.
24. (E) MONUMENT SIGN TO BE REFACED. UNDER A SEPARATE PERMIT.
25. (N) CANOPY AT ORDER POINT. 1 Separate Permit
26. MENU BOARD TO REMAIN. REMOVE (E) FLYING ARCH.
27. (E) TRANSFORMER TO REMAIN.
28. (E) GREASE INTERCEPTOR TO REMAIN.
29. (E) SANITARY SEWER TO REMAIN.
30. RE-STRIPE (E) LOADING ZONE.
31. REPLACE (E) DRIVEWAY ENTRANCE TO CITY STANDARDS. SEE DETAIL 10 / A0-1.
32. (E) GATE TO REMAIN.
33. REPLACE (E) SIDEWALK TO CITY STANDARDS.

SITE PLAN KEY NOTES B

VMI architecture
Design · Planning · Interiors
637 5th Avenue San Rafael, CA 94901
415-451-2500 415-451-2595 fax
www.vmiarchitecture.com

VMI JOB NUMBER
1856

LICENSED ARCHITECT
HUGH EDWARD MURPHY
No. C17928
REN. 10/31/19
STATE OF CALIFORNIA

CITY OF SAN JOSE
BUILDING DIVISION
B.P. #
DATE

RECORD DATES

DD SUBMITTAL	-
BLDG. SUBMITTAL	-
BID SET	-
CONTRACT SET	-

REVISIONS

1	07/24/19	BLDG - PC-1

CLIENT
Tambro Inc.
2780 Alum Rock Ave.
San Jose, CA 95127
STORE #024525

TACO BELL REMODEL
2770 Alum Rock Ave
San Josel, CA 95127
APN#: 484-20-037-2

TACO BELL
MOD EXPL
MID TERM

SITE PLAN
A0-0

W:\Data\Tambro\1856_Tambro_San.Jose_AlumRock_02452503_c01_current\400_1856_A0-0.dwg By: ARCHASSOCIATE01 Saved on:7/24/2019 4:03:11 PM
ALL IDEAS, DESIGNS, ARRANGEMENTS AND PLANS INDICATED BY AND THE DRAWINGS ARE OWNED BY, AND THE PROPERTY OF THIS OFFICE AND WERE CREATED, EVOLVED AND DEVELOPED FOR USE ON, AND IN CONNECTION WITH, THE SPECIFIED PROJECT. NONE OF SUCH IDEAS, DESIGNS, ARRANGEMENTS AND PLANS MAY BE USED BY OR DISCLOSED TO ANY PERSON, FIRM OR CORPORATION FOR ANY PURPOSE WHATSOEVER WITHOUT THE WRITTEN PERMISSION OF PROJECT ARCHITECT.
WRITTEN DIMENSIONS ON THESE DRAWINGS SHALL HAVE PRECEDENCE OVER SCALED DIMENSIONS. CONTRACTORS SHALL VERIFY AND BE RESPONSIBLE FOR ALL DIMENSIONS AND CONDITIONS ON THE JOB AND THIS OFFICE MUST BE NOTIFIED OF ANY VARIATION FROM THE DRAWINGS BEFORE PROCEEDING WITH THE WORK.

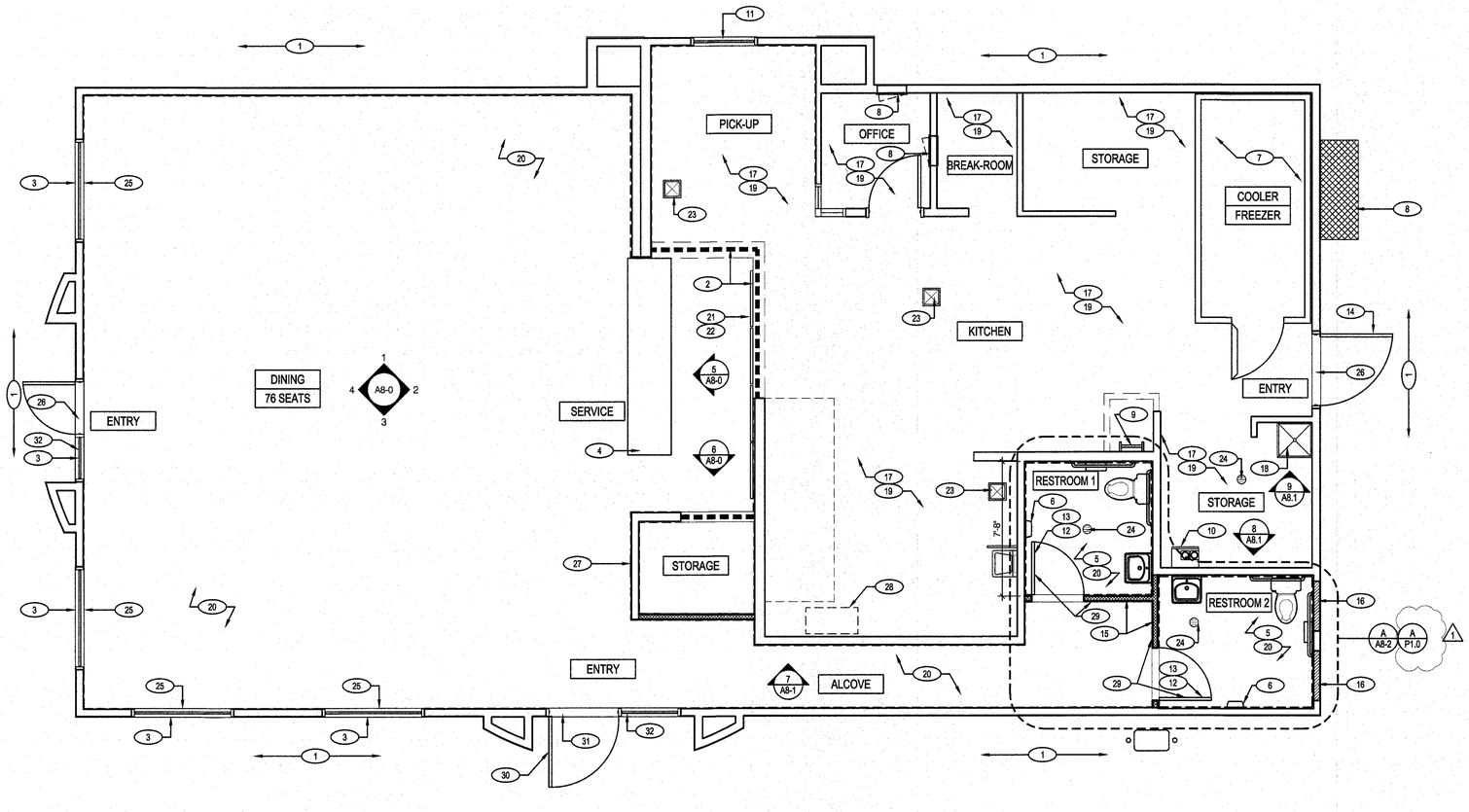

NEW FLOOR PLAN 1/4" = 1'-0" | A

TYPICAL NEW EXTERIOR WALL:
2x6 WD STUDS @ 16" O.C. W/ 1/2" GYP. BD.
SUBSTRATE U.O.N.

TYPICAL NEW INTERIOR WALL:
2x4 WD STUDS @ 16" O.C. W/ 1/2" GYP. BD.
SUBSTRATE U.O.N.

NOTE:
USE MOISTURE RESISTANT GYP. BD. BEHIND ALL CERAMIC WALL TILE. U.O.N.
ACCEPTABLE ALTERNATE:
METAL STUDS IN LIEU OF WOOD STUDS.

WALL LEGEND | F

DIMENSIONS:
A. DIMENSIONS THAT ORIGINATE FROM EXISTING ELEMENTS OF THE BUILDING ARE FROM FACE OF FINISH. ALL OTHER DIMENSIONS ARE TO FACE OF STUD U.O.N. REFER TO FOUNDATION PLAN FOR FACE OF CONC. DIMENSIONS.
B. DIMENSIONS NOTED AS "CLEAR" OR "HOLD" ARE MIN. REQ'D. NET CLEARANCE FROM FACE OF WALL / WAINSCOT FINISH. VERIFY FINAL EQUIPMENT SIZES W/ VENDOR PRIOR TO INT. WALL FRAMING.

WINDOWS / DOORS:
A. SEE SCHEDULE FOR WINDOW AND DOOR TYPES.
B. ALL DOOR AND WINDOW OPENING DIMENSIONS ARE TO ROUGH OPENING.

FINISH SUBSTRATES:
A. PROVIDE 1/2" THICK CEMENTITIOUS BD. FROM FLOOR SLAB TO 12" A.F.F. MIN. IN LIEU OF GYP. BD. AT ALL WALLS EXCEPT SHEARWALL SURFACES, U.O.N.
B. ALL JOINTS, GAPS OR SPACES LEADING TO ALL HOLLOW OR INACCESSIBLE SPACES SHALL BE SEALED WITH "NSF INTERNATIONAL" APPROVED SEALANTS.

DECOR:
A. SEE A2.0 FOR SEATING PLAN AND DETAILS.
B. SEE A7.0 FOR FLOOR FINISHES.
C. SEE A8.0 - A8.1 FOR WALL FINISHES.
D. SEE A7.1 FOR CEILING & WALL FINISHES.

GENERAL:
A. DRAWINGS ARE BASED UPON WOOD FRAMING. UTILIZATION OF METAL STUDS ON NON-BEARING INTERIOR PARTITIONS, BULKHEADS AND SOFFITS IS ACCEPTABLE.
B. ALL ATTACHMENTS MADE THROUGH E.I.F.S. SHALL BE BUSHED TO PREVENT DAMAGE TO THE FINISH.
C. ALL PENETRATIONS THROUGH CEMENT PLASTER SHALL BE SEALED USING MFR'S. APPROVED METHOD.

FLOOR PLAN NOTES | D

(#) KEYNOTE SYMBOL ON PLAN

1. POWER WASH, PATCH AND REPAIR (E) STUCCO SURFACES AND AS NEEDED FOR NEW EXTERIOR PAINT. SEE EXTERIOR ELEVATIONS A4-0 & A4-1.
2. PROTECT EXISTING EQUIPMENT FROM DUST AND DEBRIS. G.C. TO CONSTRUCT A TEMPORARY FLOOR TO CEILING BARRIER BEHIND INTERIOR MENU BOARD BULKHEAD WALL. BARRIER SHALL BE CONSTRUCTED OUT OF PLYWOOD AND SEALED WITH PLASTIC SHEATHING TO MINIMIZE ANY DUST INFILTRATION INTO KITCHEN AREAS DURING CONSTRUCTION. PROVIDE A 3' X 6'-8" HINGED ACCESS DOOR. SEE EQUIPMENT PLAN.
3. PROTECT EXISTING STOREFRONT & DOORS, WINDOWS & FRAMES TO REMAIN.(E) STOREFRONT DOORS TO REMAIN WITH (E) HARDWARE. ADJUST OPENING PRESSURE TO #5 PULL PRESSURE TO OPERATE.
4. (N) POS COUNTER. GC TO COORDINATE WITH SEATING VENDOR.
5. RE-INSTALL (E) TOILETS, HAND SINK, FAUCETS AND ACCESSORIES IN RESTROOMS IF IN GOOD CONDITION AND ADA COMPLAINT AND MEETS CALGREEN.
6. (N) ELECTRIC HAND DRYERS. RUN 10 AMP 208 CIRCUIT TO THIS LOCATION. SEE DWG A8-2 FOR MOUNTING HEIGHT.
7. (E) WALK-IN COOLER/ FREEZER TO REMAIN - NO WORK.
8. (E) ELECTRICAL PANELS & MAIN SWITCH GEAR TO REMAIN.
9. (E) LADDER TO ROOF TO REMAIN.
10. (N) NORITZ NC300DV TANKLESS WATER HEATER. SEE DWG A8-0. REUSE (E) GAS LINE FOR W.H.
11. (E) DRIVE-THRU PICK-UP WINDOW TO REMAIN.
12. (E) RESTROOM DOORS, FRAMES AND HARDWARE TO BE REINSTALL. RE-LAMINATE DOOR AND PAINT DOOR FRAME, BOTH SIDES AND PREP DOOR AND FRAME FOR NEW FINISHES, REF SHEET A7-2. PATCH AND REPAIR AS REQUIRED. REPAIR/ REPLACE HARDWARE AS REQUIRED TO BRING TO LIKE NEW CONDITION.
13. (N) DOOR HOOK ON BACK OF DOOR TO HOLD OPEN.
14. (E) REPAIR AND REPAINT REAR DOOR.
15. (N) 2x4 STUDS AT 16" oc. PER 2 / A6-1.
16. INFILL (E) DOOR OPENING AND ALIGN (N) FINISHES WITH (E) FINISHES.
17. STEAM CLEAN TILE IN THE KITCHEN AREA AND RE-GROUT AND RESEAL JOINTS.
18. (N) MOP SINK AND STAINLESS STEEL SURROUND FOR MOP SINK. SEE DWG 9/A8-1. PATCH AND REPAIR WALL BEHIND (E) MOP SINK PRIOR TO INSTALLING (N) S.S. SURROUND.
19. (E) DAMAGED OR DISCOLORED FRP IN KITCHEN AND OFFICE TO BE REPLACED OR REPAIRED.
20. REPAIR (E) WALL DAMAGE WHERE TILE AND TILE BASE WERE REMOVED.
21. (N) STRAIGHTEN BULKHEAD & SOFFIT TO REMAIN, CAP WITH S.S. CORNER GUARDS.
22. (N) DIGITAL MENU BOARDS. COORDINATE ELECTRICAL LOCATIONS WITH OWNERS.
23. (E) FLOOR SINK AT KITCHEN TO REMAIN.
24. (E) FLOOR DRAIN AT KITCHEN AND RESTROOMS TO REMAIN.
25. RE-INSTALL OR REPLACE SUBSTRATE BELOW WINDOWS AFTER FRAMING INSPECTION.
26. VERIFY STOREFRONT DOOR AND THRESHOLD COMPLIES WITH ADA REQUIREMENTS. REPLACE IF NECESSARY.
27. **(N) MAXIMUM OCCUPANCY SIGN. SEE A1-1.**
28. **(E) GREASE TRAP TO REMAIN.**
29. **(N) ADA RESTROOM SIGN PER 1 / ADA-3.**
30. REUSE EXISTING DOOR AND HARDWARE. MODIFY FRAME AS SHOWN WITH NEW TEMP GLASS 11 / A6-0.
31. (N) ADA COMPLIANT THRESHOLD.
32. (N) INTERNATIONAL SYMBOL OF ACCESSIBILITY AT 60" A.F.F. SEE ELEVATIONS A4-0.

KEY NOTES | B

VMI architecture
Design · Planning · Interiors
637 5th Avenue San Rafael, CA 94901
415-451-2500 415-451-2595 fax
www.vmiarchitecture.com

VMI JOB NUMBER
1856

LICENSED ARCHITECT
HUGH EDWARD MORGAN
No. C17936
REN. 10/31/19
STATE OF CALIFORNIA

CITY OF SAN JOSE
BUILDING DIVISION
B.P. #
DATE

RECORD DATES
DD SUBMITTAL -
BLDG. SUBMITTAL -
BID SET -
CONTRACT SET -

REVISIONS
1 07/24/19 BLDG - PC-1

CLIENT
Tambro Inc.
2780 Alum Rock Ave.
San Jose, CA 95127
STORE #024525

TACO BELL REMODEL
2770 Alum Rock Ave
San Josel, CA 95127
APN#: 484-20-037-2

TACO BELL
MOD EXPL
MID TERM

FLOOR PLAN
A1-0

W:\Data\Tambro\1856_Tambro_SanJose_AlumRock_024525\03_cd_current\410_1856_A1-0.dwg By: ARCHASSOCIATE01 Saved on:7/24/2019 4:43:16 PM
ALL IDEAS, DESIGNS, ARRANGEMENTS AND PLANS INDICATED BY THIS DRAWING ARE OWNED BY, AND THE PROPERTY OF THIS OFFICE AND WERE CREATED, EVOLVED AND DEVELOPED FOR USE ON, AND IN CONNECTION WITH, THE SPECIFIED PROJECT. NONE OF SUCH IDEAS, DESIGNS, ARRANGEMENTS OR PLANS SHALL BE USED BY OR DISCLOSED TO ANY PERSON, FIRM OR CORPORATION FOR ANY PURPOSE WHATSOEVER WITHOUT THE WRITTEN PERMISSION OF PROJECT ARCHITECT.
WRITTEN DIMENSIONS ON THESE DRAWINGS SHALL HAVE PRECEDENCE OVER SCALE DIMENSIONS. CONTRACTORS SHALL VERIFY AND BE RESPONSIBLE FOR, ALL DIMENSIONS AND CONDITIONS ON THE JOB AND THIS OFFICE MUST BE NOTIFIED OF ANY VARIATION FROM THE DIMENSIONS AND CONDITIONS SHOWN BY THESE DRAWINGS. SHOP DETAILS OF ADEQUATE SCALE MUST BE SUBMITTED TO THIS OFFICE FOR APPROVAL BEFORE PROCEEDING WITH FABRICATION ON ITEMS SO NOTED.

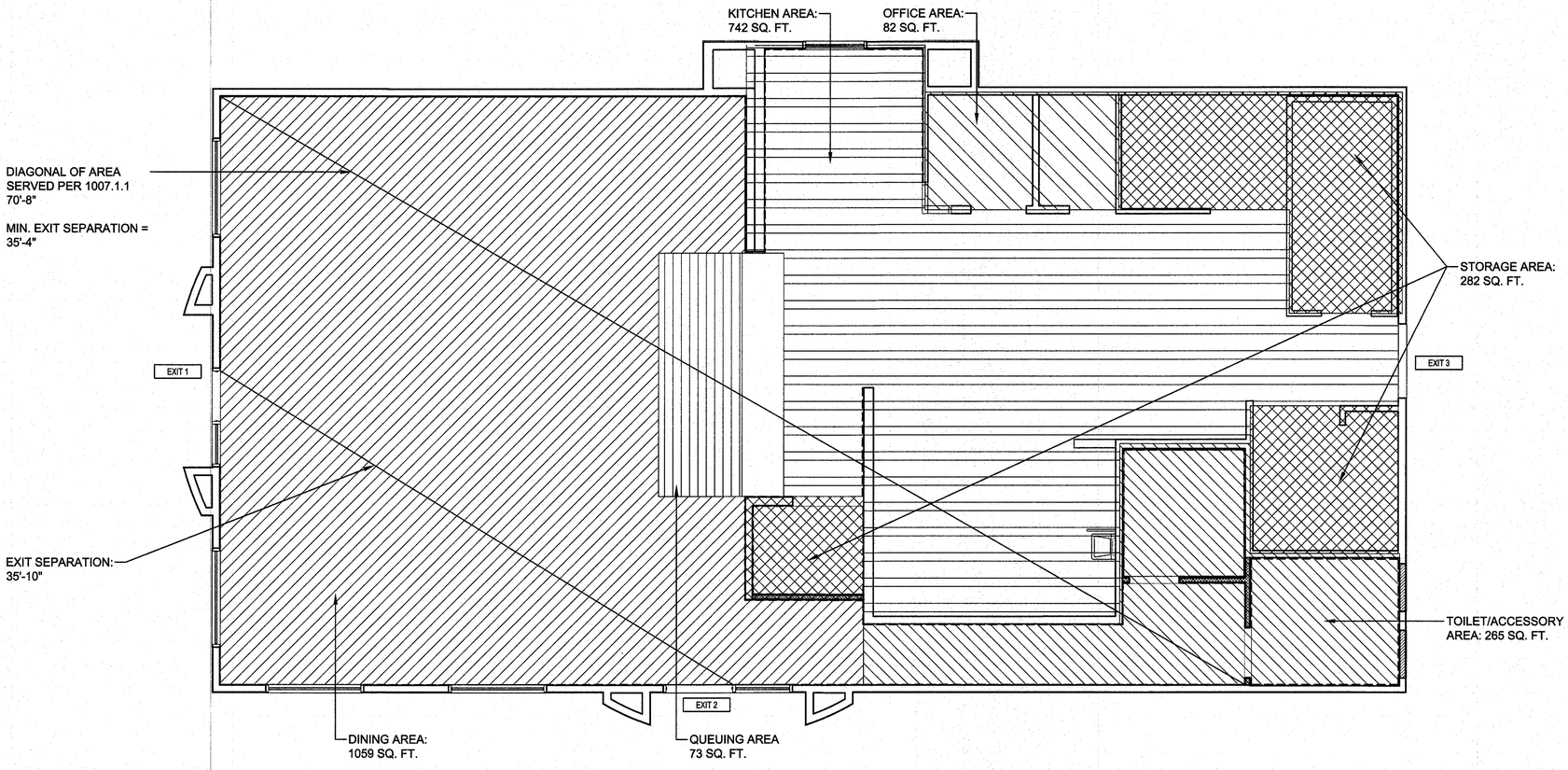

OCCUPANCY PLAN 1/4" = 1'-0" | A

FIXTURE COUNT FOR RESTROOMS

SPACE	SQUARE FEET	RATE PER SQUARE FOOT	TOTAL
DINING	1132	30/SF *	38
KITCHEN	740	200/SF **	4
STORAGE	282	200/SF **	2
OFFICE	82	200/SF **	1
TOTAL			45

* BASED ON CPC TABLE 422.1 TABLE A OCCUPANCY A2
** BASED ON CPC TABLE 422.1 TABLE A OCCUPANCY B.

RESTROOMS AND HALL TO RESTROOMS ARE EXCLUDED FROM CALCULATIONS.

OCCUPANT LOAD AND FIRE SPRINKLER REQUIREMENT STUDY

SPACE	AREA (SQ. FT.)	CALCULATION	OCCUPANTS
DINING AREA	1059	1 PERSON / 15 SQ. FT.	71
QUEUING AREA	73	1 PERSON / 5 SQ. FT.	15
KITCHEN AREA	742	1 PERSON / 200 SQ. FT.	4
OFFICE AREA	82	1 PERSON / 100 SQ. FT.	1
STORAGE AREA	282	1 PERSON / 300 SQ. FT.	1
TOILET / ACCESSORY AREA	239	N/A	-
TOTAL:	2,472 S.F.	TOTAL:	92 PERSONS

OCCUPANCY CALCULATION | D

A. SECTION 1015 AND TABLE 1015.1 REQUIRE TWO EXITS WHEN OCCUPANT LOAD EXCEEDS 49 PERSONS. TABLE 1021.1 REQUIRES TWO (2) EXITS FOR UP TO 500 OCCUPANTS.

GENERAL NOTES | C

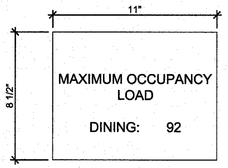

NOTES:

1. LETTERS TO BE ARIAL NARROW, MINIMUM 3/4" HIGH WITH A 1/16" STROKE.
2. LETTERS TO BE BLACK ON A WHITE BACKGROUND.
3. SIGN SHALL BE DURABLE, PERMANENT, AND HAVE A CONTRASTING COLOR FROM THE BACKGROUND.
4. SIGN MUST BE HAVE A CORRESPONDING FLOOR LAYOUT AT LEAST 8-1/2" x 11".
5. SIGN SHALL BE MAINTAINED BY THE OWNER AS DEFINED BY SECTION 1004.3.

OCCUPANCY SIGN N.T.S. | B

VMI architecture
Design · Planning · Interiors
637 5th Avenue San Rafael, CA 94901
415-451-2500 415-451-2595 fax
www.vmiarchitecture.com

VMI JOB NUMBER
1856

LICENSED ARCHITECT
HUGH EDWARD MORRY
No. C17928
REN. 10/31/19
STATE OF CALIFORNIA

CITY OF SAN JOSE
BUILDING DIVISION
B.P. #
DATE

RECORD DATES
DD SUBMITTAL -
BLDG. SUBMITTAL -
BID SET -
CONTRACT SET -

REVISIONS

CLIENT
Tambro Inc.
2780 Alum Rock Ave.
San Jose, CA 95127
STORE #024525

TACO BELL REMODEL
2770 Alum Rock Ave
San Josel, CA 95127
APN#: 484-20-037-2

TACO BELL
MOD EXPL
MID TERM

OCCUPANT LOAD
CALCULATION

A1-1

W:\Data\Tambro\1856_Tambro_San.Jose_AlumRock_024525\03_cd_current\412_1856_A1-1.dwg By: ARCHASSOCIATE01 Saved on:8/14/2019 3:01:31 PM
ALL IDEAS, DESIGNS, ARRANGEMENTS AND PLANS INDICATED BY THIS DRAWING ARE OWNED BY, AND THE PROPERTY OF THIS OFFICE AND WERE CREATED, EVOLVED AND DEVELOPED FOR USE ON, AND IN CONNECTION WITH, THE SPECIFIED PROJECT. NONE OF SUCH IDEAS, DESIGNS, ARRANGEMENTS OR PLANS SHALL BE USED BY OR DISCLOSED TO ANY PERSON, FIRM OR CORPORATION FOR ANY PURPOSE WHATSOEVER WITHOUT THE WRITTEN PERMISSION OF PROJECT ARCHITECT.
WRITTEN DIMENSIONS ON THESE DRAWINGS SHALL HAVE PRECEDENCE OVER SCALE DIMENSIONS. CONTRACTORS SHALL VERIFY AND BE RESPONSIBLE FOR, ALL DIMENSIONS AND CONDITIONS ON THE JOB AND THIS OFFICE MUST BE NOTIFIED OF ANY VARIATION FROM THE DIMENSIONS AND CONDITIONS SHOWN BY THESE DRAWINGS. SHOP DETAILS OF ADEQUATE SCALE MUST BE SUBMITTED TO THIS OFFICE FOR APPROVAL BEFORE PROCEEDING WITH FABRICATION ON ITEMS SO NOTED.

GENERAL NOTES:
G.C. SHALL PROVIDE A CLEAR SILICONE SEAL JOINT AT ALL PERMANENTLY MOUNTED EQUIPMENT, COUNTERS AND CEILING GRID THROUGHOUT THE ENTIRE STORE. MASKING TAPE SHALL BE USED ON JOINTS EXCEEDING 1/4" TO PROVIDE A COVED CORNER.

VERIFY EXISTING FIELD CONDITIONS AND G.C. TO PROVIDE ADDITIONAL PLUMBING / HOT & COLD WATER AND OR ELECTRICAL TO ANY NEW EQUIPMENT AS MAY BE REQUIRED.

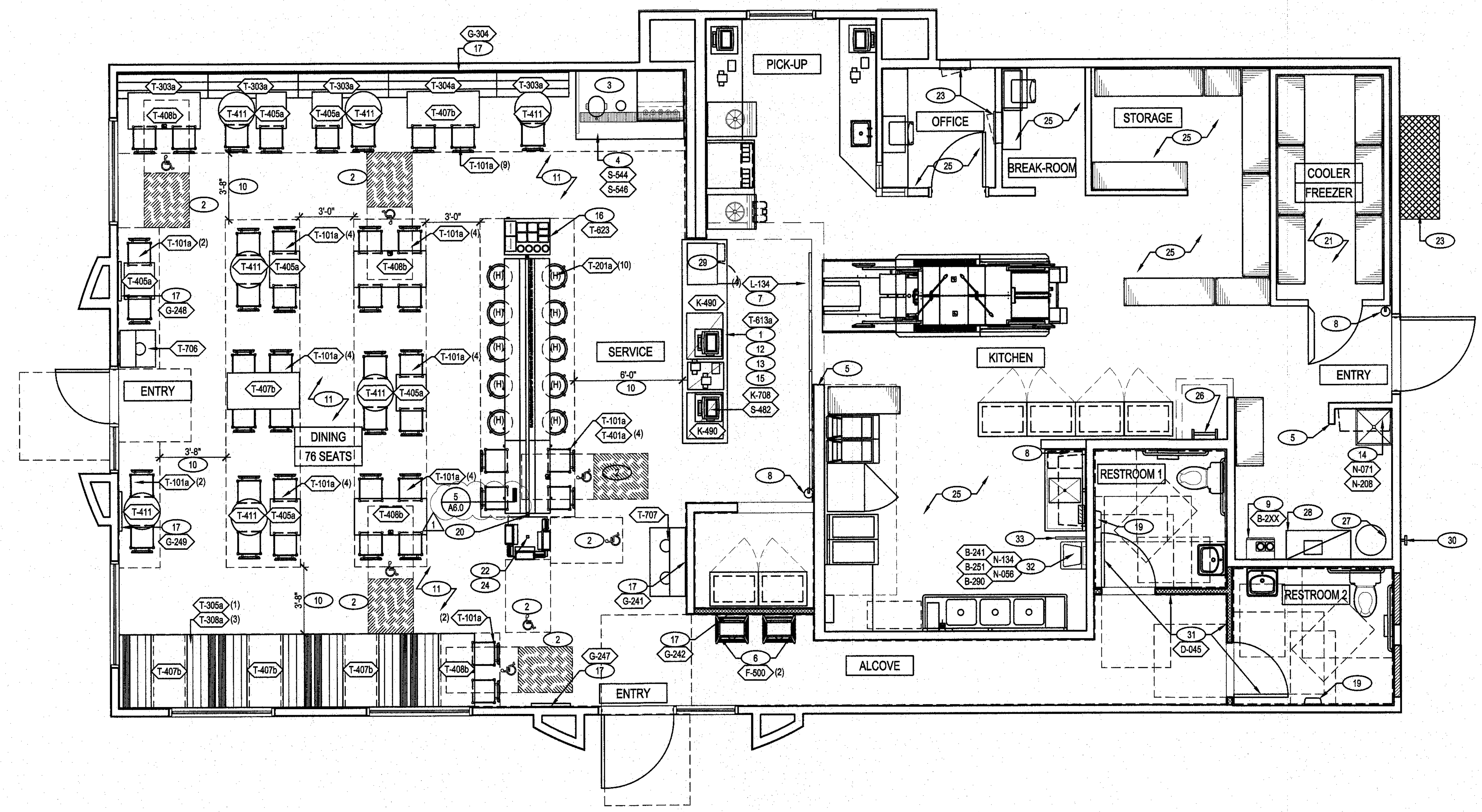

NORTH

THE FOLLOWING GENERAL CONSTRUCTION ITEMS ARE PART OF THIS PROJECT. THE GENERAL CONTRACTOR SHALL VISIT THE SITE AND ASCERTAIN THE EXTENT OF THIS WORK PRIOR TO SUBMITTING BID.

1. PREP AND REPAINT ALL EXISTING BOLLARDS ON SITE SAFETY YELLOW. ALL NEW BOLLARDS, AS NOTED ON PLANS, TO BE PAINTED SAME COLOR.
2. WHERE NEEDED- POWER WASH ALL ROOF TILE.
3. CLEAN OUT AND SEAL ALL CONCRETE CRACKS LARGER THAN ¼ THICK AT ALL AREAS INCLUDING CURBS AND GUTTERS.
4. WHERE NEEDED- PAINT ALL ON-SITE FENCES AND RAILINGS TO MATCH BUILDING FIELD COLOR, U.O.N.
5. REMOVE OIL AND OR SODA STAINS IN THE DRIVE THRU AND TRASH ENCLOSURE AREA.
6. PROVIDE STAINLESS STEEL CORNER GUARDS AT MENU BOARD SOFFIT AND WALL NEXT TO THE COUNTER.
7. REPLACE KITCHEN CEILING TILES AND HVAC VENTS. REMOVE AND REPLACE KITCHEN CEILING LIGHTS, UPGRADE TO LED.
8. IN REMODELED INTERIOR AREAS- REPLACE ALL MISCELLANEOUS ACCESSORIES WITH NEW OR CLEAN/ REPAIR EXISTING TO 'LIKE NEW' CONDITION. INCLUDES BUT NOT LIMITED TO CLEAN OUT COVERS, ELECTRICAL WALL PLATES, SWITCHES, SMOKE DETECTORS, FIRE ALARM INDICATORS,CORNER GUARDS, DAMAGED HVAC GRILLES, DAMAGED LIGHT FIXTURES, THERMOSTAT COVERS/ REMOTE SENSORS, STAINLESS STEEL CHASES, FLOOR DRAIN/ SINK COVERS, MISSING DOOR HARDWARE, ETC.
9. SNAKE AND CLEAN OUT FLOOR DRAINS IN TOILET ROOMS.
10. VIDEO TAPE ALL SEWER LINES TO PUBLIC CONNECTION POINTS. PROVIDE VIDEO TO OWNER.
11. REPAIR EXISTING DOOR CLOSERS, WHERE NOTED AS REMAINING, TO OPERATE AT 5# MAX PRESSURE.
12. REPAIR AND CLEAN EXISTING STOREFRONT DOORS, FRAMES, WEATHER STRIPPING AND GLAZING.
13. PAINT ALL EXISTING CEILING COMPONENTS (EXCLUDING PARTS THAT ARE NOT TO BE PAINTED SUCH AS CODE ITEMS) TO MATCH PAINTED CEILING TILE GRID INCLUDES, BUT NOT LIMITED TO, SPEAKERS, HVAC, REGISTERS, CEILING OUTLETS, ETC.
14. ALL NEW WALL ELECTRICAL/ DATA PLATE COVERS SHALL BE STAINLESS STEEL.
15. PRICE CONFIRMATION BOARDS (PCB) AT DT & PREPAY WINDOWS WILL BE REMOVED BY OWNER.DISCONNECT/ CAP ELECTRICAL AND PATCH/ PAINT OPENING TO MATCH ADJACENT SURFACES.
16. REPLACE SCREENS ON EXISTING EXTERIOR FLY FANS OVER DT AND PREPAY WINDOWS.
17. WHERE (E) CUSTOMER SELF-SERVE DRINK TABLE IS TO REMAIN (REFER TO DWG A2) THE GC SHALL CLEAN AND BUFF STAINLESS STEEL FINISHES. OWNER WILL REPLACE LAMINATE DOORS WITH STAINLESS STEEL DOORS.
18. WHERE NEEDED- PREP & REPAINT EXISTING TRASH ENCLOSURE AND GATES TO MATCH BUILDING FIELD COLOR.
19. REPLACE ALL BROKEN OR DAMAGED WHEEL STOPS IN PARKING AREA AS NOTED ON DWG A0-0.
20. DISCUSS IN ADVANCE WITH OWNER: REPAIR, SLURRY AND STRIPE PARKING LOT.
21. ALL ADA UPGRADES BROUGHT UP TO THE CURRENT CODE.
22. PAINT DUMPSTER AND REPLACE GATE IF NECESSARY.
23. REPAIR/ REPLACE DAMAGED KITCHEN FLOOR TILES. FILL/ REPAIR GROUT AS NEEDED.
24. REPLACE ANY CUSTOMER VISIBLE FRP OR WALL TILE THAT IS DISCOLORED OR IN DISREPAIR (EXCESSIVE HOLES CRACKS, DAMAGED).
25. REPLACE LOT LIGHT HEADS WITH LED LIGHTS.

SHELVING QUANTITIES:

STORAGE TYPE:

	LINEAR FEET	PROVIDED
DRY	42 ft	EXISTING
COLD	23 ft	EXISTING
FROZEN	10.75 ft	EXISTING

NEW SEATING PLAN 1/4" = 1'-0" A

EQ #	Count	Description	Remarks
B-2XX	1	TANKLESS WATER HEATER	NORITZ NCC300DV (GQ-C5032WZ-FF US.)
B-241	1	SOAP DISPENSER (WALL MOUNT)	
B-251	1	SANITIZER DISPENSER (WALL MOUNT)	
B-290	1	PAPER TOWEL DISPENSER - BOBRICK #B-262	
B-599	1	MOP SINK STATION	ISS #WST806Y
D-045	2	SIGN- RESTROOM ALL GENDER WITH BRAILLE 10"X6.5"	UNISEX DOOR SIGN
S-482	1	CUP DISPENSER - A.J. ANTUNES #DACS60	W/ ANGLED MOUNTING BRACKET OMNITEAM CDB-DTA
K-490	2	FRONT COUNTER SHELVING 18" X 24" X 24" (2 TIER)	
K-708	1	DUNNAGE RACK	UNDER FRONT COUNTER
L-043	4	43" DIGITAL QUEUE BOARD DISPLAY	
N-056		HAND SINK (KITCHEN) - AERO #HSK-A	15"W x 17"L - 10"x14", FRONT TO BACK x 5"D, INCLUDES FAUCET W/.5 GPM AERATOR, BASKET, KNEE VALVE
N-071	1	MOP SINK FAUCET - T&S #B-2465	KITCHEN
N-134	1	FAUCET - T&S FAUCET B-2460	KITCHEN
N-208	1	MOP SINK 24"X24" FLOOR MOUNT SINK AERO MANUF. CO., INC. #3MP-2121-6/1P	INCLUDES (2) 24"X36" WALL PANELS
S-544	2	ICED TEA DISPENSER - BUNN TDO-N-3.5	3.5 GALLON NARROW ICED BEVERAGE DISPENSER
S-546	1	ICED TEA BREWER - TETLEY E56150000	
U-130	1	MOUNTING PLATE	MOUNTING PLATE
U-131	3	MOUNTING PLATE	MOUNTING PLATE
U-135	3	KIOSK TABLET	PROVIDE DEDICATED CIRCUIT AND (2) TWO CAT 6 CABLES PER TABLET
U-136	3	VERIFONE (CREDIT CARD MACHINE)	1 PER KIOSK TABLET
U-137	3	STORM AUDIO - NAV KEYPAD	1 PER STORE. CALIFORNIA STORES 50% OF TOTAL NUMBER OF SCREENS

NEW EQUIPMENT G

EQ #	Count	Description
T-101a	43	CHAIR - WOOD SEAT / METAL BACK
T-201a	10	29" BAR STOOL
T-303a	4	BENCH 60"
T-304a	1	BENCH 72"
T-305a	1	SINGLE 48" BOOTH
T-308a	3	DOUBLE 48" BOOTH
T-401a	1	HUB TABLE ADA
T-405a	6	24"X20" TABLE TOP AND CLAW BASE
T-407b	5	24"X48" TABLE TOP AND BASE
T-408b	4	24"X48" TABLE TOP AND BASE - ADA
T-411	7	24" DIA TABLE TOP AND CROSS BASE
T-613a	1	POS COUNTER
T-623	1	CONDIMENT TABLE
T-706	1	SINGLE TRASH RECEPTACLE
T-707	1	DOUBLE TRASH RECEPTACLE
Z-301a	2	SINGLE REVERSIBLE BOOTH END PANEL
Z-302a	6	DOUBLE REVERSIBLE BOOTH END PANEL
Z-303a	1	BACK PANEL

FURNITURE/DECOR SCHEDULE D

GRAPHIC VENDOR:
IMPACT SPECIALTIES

JEN DAVIS
PHONE: (619) 481-9588
EMAIL: JDAVIS@IMPACTSPECIALTIES.COM

ARTWORK SCHEDULE F

1. "HOLD" DIMENSIONS FROM FACE OF FINISH.
2. G.C. TO CONFIRM "HOLD" DIMENSIONS WITH EQUIPMENT MFR/VENDOR.
3. TILE CHIPPING AROUND CORE DRILL HOLES FOR SEATING WILL NOT BE ACCEPTED WILL NOT BE ACCEPTED.
4. ALL DIMENSIONS FOR SEATING / CORE DRILL PLAN SHALL BE FROM FACE OF GYP BD.
5. VERIFY ALL DIMENSIONS WITH SEATING VENDOR PRIOR TO INSTALLATION.
6. REFER TO SC SHEETS FOR SCOPE OF WORK RESPONSIBILITIES.'
7. SEE INTERIOR ELEVATIONS A8.0-A8.1 FOR LOCATION OF OWNER SUPPLIED ARTWORK.
8. PROVIDE THE FOLLOWING HARDWARE FOR EACH CABINET WITH STOOLS DOOR:
   KNOB: STANLEY 4482 (1 EA)
   CATCH: STANLEY SP35 (1 EA)
   HINGE: STANLEY 1588 (2 EA)
9. (H) - SYMBOL DENOTES A HIGH TABLE OR DINING COUNTER.

♿ SYMBOL DENOTES A HANDICAP ACCESSIBLE TABLE.

SEATING PLAN NOTES E

EQ#	Count	Description
G-241	1	MASH UP
G-242	1	MASH UP
G-247	1	LINEAR PACKETS
G-248	1	LINEAR PACKETS
G-249	1	LINEAR PACKETS
G-304	1	LINEAR SAUCES (72")

ARTWORK SCHEDULE C

(#) KEYNOTE SYMBOL ON PLAN

1. (N) SERVICE COUNTER. GC TO COORDINATE WITH DECOR VENDOR. COUNTERTOP TO MATCH CORIAN WINDOW SILLS. FINAL FINISH COUNTERTOP IS TO BE 34" MAX. ABOVE FINISH FLOOR.
2. ADA CLEARANCE REQUIREMENTS. MAINTAIN 30" x 48" CLEAR FLOOR SPACE FOR HANDICAP ACCESS. MAINTAIN MINIMUM 3'-8" CLEAR PATH OF EGRESS.
3. RE-INSTALL (E) PEPSI AND ICE MACHINE ON (E) AND SODA TABLE.
4. (E) DRINK STATION TO RE-INSTALL G.C. TO RECONNECT ELECTRICAL AND PLUMBING AND OVERHEAD SYRUP LINES AS REQUIRED FOR RECONNECTION.
5. (N) CORNER GUARD. SEE DETAIL 6 / A6-0.
6. (E) HIGH CHAIR BY OWNER. (F-500)
7. (N) DIGITAL MENU BOARD. SEE A7-1 FOR ELECTRICAL REQUIREMENTS. CENTER IN THE MIDDLE OF SOFFIT. (L-043)
8. (EX) PORTABLE 2A-10BC FIRE EXTINGUISHERS WITH MAXIMUM TRAVEL DISTANCE OF 75' BETWEEN THEM. IF NOT GC TO PROVIDE REQUIRED FIRE EXTINGUISHERS AND MOUNT THEM WHERE DIRECTED BY THE FIRE INSPECTOR.
9. (N) TANKLESS WATER HEATER. NORITZ NCC300DV (GQ-C5032WZ-FF US.)
10. MAINTAIN 44" CLEAR PATH OF TRAVEL.
11. ALL (E) TABLES & CHAIRS TO BE REPLACED WITH NEW.
12. INSTALL UNDER COUNTER CUP DISPENSER WITH ANGLED BRACKETS.
13. REWORK EXISTING POWER FOR POS ITEMS ON NEW ORDER COUNTER.
14. (N) STAINLESS STEEL SURROUND AT MOP SINK.
15. HOLES FOR POS CASH REGISTER POWER AND DATA LINE SHOULD BE FIELD CUT BY GC PRIOR TO POS SETUP (TYP).
16. (N) CONDIMENT CART.
17. (N) WALL ART. SEE ELEVATIONS SHEET A8-0 FOR SIZE AND LOCATION.
18. (N) MAXIMUM OCCUPANCY SIGN. SEE A1-2
19. (N) ELECTRIC HAND DRYERS IN RESTROOMS.
20. HUB TABLE POWER PROVIDED FROM CEILING. RUN FLEX CABLE WIRING TO AND THROUGH CHASE DOWN TUBE TO JUNCTION BOX ON UNDERSIDE OF TABLE.
21. (E) WALK-IN COOLER / FREEZER TO REMAIN.
22. PROVIDE JUNCTION BOXES IN CEILING FOR FUTURE KIOSKS. PROVIDE DEDICATED 10 AMP CIRCUIT AND (2) TWO CAT 6 CABLES PER TABLET. 3 TABLETS TOTAL.
23. (E) ELECTRIC PANELS & SWITCH GEAR TO REMAIN.
24. (N) KIOSK ORDER STATIONS.
25. (E) KITCHEN EQUIPMENT, OFFICE, BREAK-ROOM AND STORAGE TO REMAIN.
26. (E) ROOF LADDER AND ROOF HATCH TO REMAIN.
27. RELOCATE (E) CO2 TANK ON NEW LOCATION IN KITCHEN.
28. (E) BAG IN BOX SYRUP TO REMAIN.
29. (E) SAFE BRINKS TO BE REINSTALLED UNDER FRONT COUNTER.
30. (N) EXTERIOR FILLER VALVE.
31. (N) ADA SIGNAGE PER 1 / ADA-.3
32. (N) HAND SINK. SOAP / HAND SANITIZER DISPENSERS - BY ECOLAB. CONNECT TO (E) PLUMBING.
33. (N) SLASHGUARD, SEE 14/A6.0.

KEY NOTES B

VMI architecture
Design · Planning · Interiors
637 5th Avenue San Rafael, CA 94901
415-451-2500 415-451-2595 fax
www.vmiarchitecture.com

VMI JOB NUMBER
1856

LICENSED ARCHITECT HUGH EDWARD MURPHY No. C17928 REN. 10/31/19 STATE OF CALIFORNIA

CITY OF SAN JOSE BUILDING DIVISION
B.P. #
DATE

RECORD DATES
DD SUBMITTAL -
BLDG. SUBMITTAL -
BID SET -
CONTRACT SET -

REVISIONS
1 07/24/19 BLDG - PC-1

CLIENT
Tambro Inc.
2780 Alum Rock Ave.
San Jose, CA 95127
STORE #024525

TACO BELL REMODEL
2770 Alum Rock Ave
San Josel, CA 95127
APN#: 484-20-037-2

TACO BELL
MOD EXPL
MID TERM

SEATING PLAN
A2-0

W:\Data\Tambro\1856_Tambro_SanJose_AlumRock_024525\03_cd_current\420_1856_A2-0.dwg By: ARCHASSOCIATE01 Saved on:7/24/2019 5:15:37 PM

ALL IDEAS, DESIGNS, ARRANGEMENTS AND PLANS INDICATED BY THIS DRAWING ARE OWNED BY, AND THE PROPERTY OF THIS OFFICE AND WERE CREATED, EVOLVED AND DEVELOPED FOR USE ON, AND IN CONNECTION WITH, THE SPECIFIED PROJECT. NONE OF SUCH IDEAS, DESIGNS, ARRANGEMENTS OR PLANS SHALL BE USED BY OR DISCLOSED TO ANY PERSON, FIRM OR CORPORATION FOR ANY PURPOSE WHATSOEVER WITHOUT THE WRITTEN PERMISSION OF PROJECT ARCHITECT. WRITTEN DIMENSIONS ON THESE DRAWINGS SHALL HAVE PRECEDENCE OVER SCALE DIMENSIONS: CONTRACTORS SHALL VERIFY AND BE RESPONSIBLE FOR, ALL DIMENSIONS AND CONDITIONS ON THE JOB AND THIS OFFICE MUST BE NOTIFIED OF ANY VARIATION FROM THE DIMENSIONS AND CONDITIONS SHOWN BY THESE DRAWINGS. SHOP DETAILS OF ADEQUATE SCALE MUST BE SUBMITTED TO THIS OFFICE FOR APPROVAL BEFORE PROCEEDING WITH FABRICATION ON ITEMS SO NOTED.

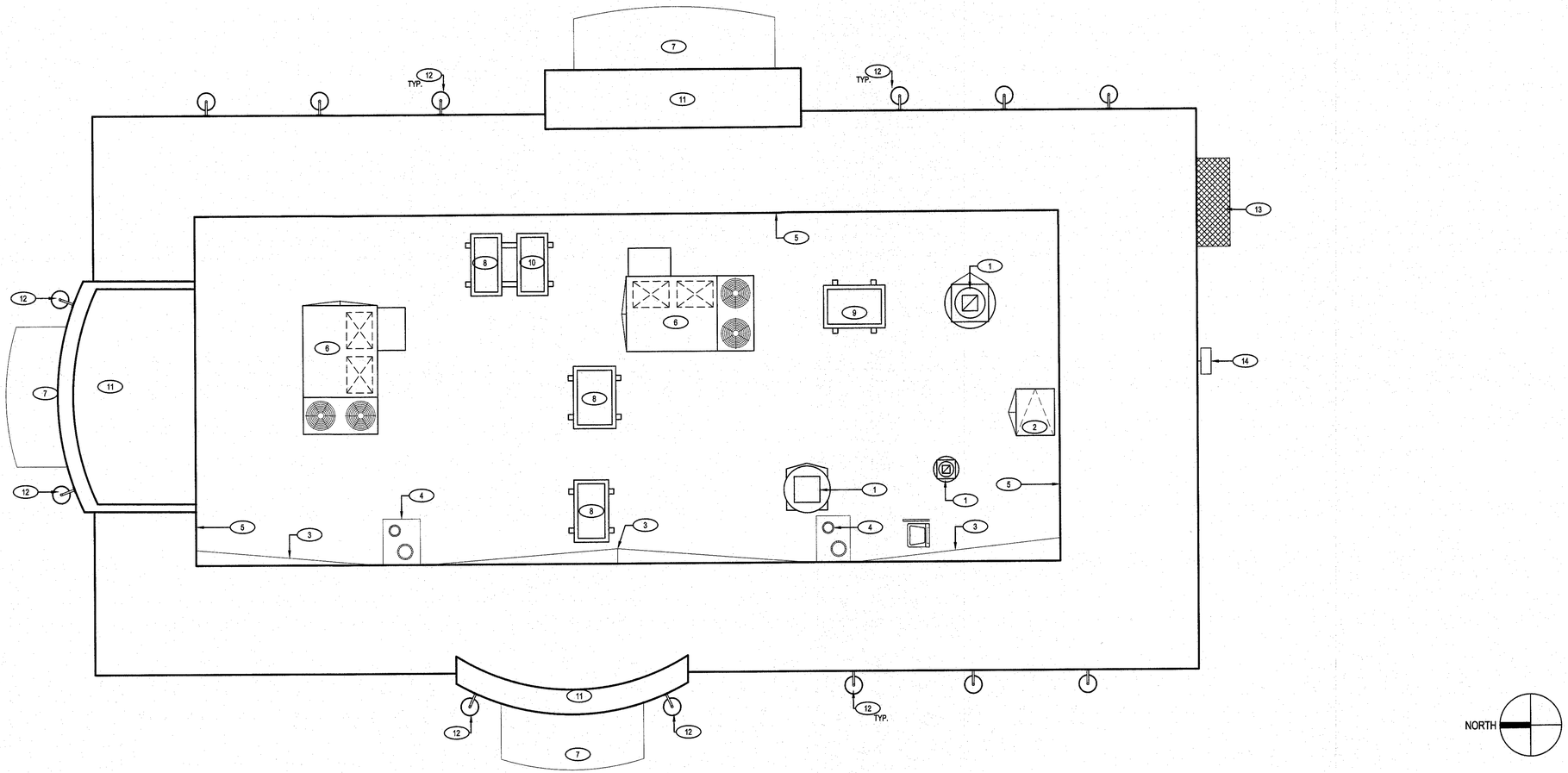

NEW ROOF PLAN 1/4" = 1'-0" | A

NOT USED | D

(#)

WATERPROOFING:
PAINT UNDERSIDE OF PARAPET CAP FLASHING WITH FACTORY BONDED PAINT GRIP OR PRIMER.
TOP NAILING AT PARAPET CAP FLASHING WILL NOT BE ACCEPTED.
PENETRATIONS IN ROOFING MEMBRANE AND FLASHING SHALL ONLY BE MADE AS INDICATED ON THE DRAWINGS OR SPECS.
SEE SPECIFICATIONS FOR SEALANT SPECS.
ALL SHEET METAL FLASHING SHALL BE 22 GAUGE MINIMUM.

FIRE DEPARTMENT NOTES:
ROOF COVERING MATERIALS SHALL BEAR UL LABELS WITH FIRE EXPOSURE CLASS "A".
SEE SPECS.

MISCELLANEOUS:
NO ROOF PENETRATIONS CLOSER THAN 12" FROM ANOTHER WILL BE ALLOWED.
EXHAUST FANS MUST BE MINIMUM 10'-0" AWAY FROM ALL AIR INTAKE / SUPPLY.

GENERALL NOTES | C

(#) KEYNOTE SYMBOL ON PLAN.

1. (E) EXHAUST FANS TO REMAIN.
2. (E) ROOF ACCESS HATCH AND LADDER TO REMAIN.
3. (E) ROOF CRICKET.
4. (E) ROOF DRAINS. MAINTAIN (E) DISCHARGE OF PRIMARY DRAINS AT FACE OF (E) CURB.
5. (E) PARAPET WALL.
6. (E) RTU UNIT TO REMAIN.
7. (E) CANOPIES TO REMAIN.
8. (E) CONDENSERS FOR ICE AT SELF SERVE DRINK STATION ON (E) SLEEPER SUPPORTS TO REMAIN.
9. (E) WALK-IN COOLER / FREEZER CONDENSERS TO REMAIN.
10. (E) FRUITISTA CONDENSER ON SLEEPERS SIMILAR TO WALK-IN CONDENSERS.
11. (E) TOP OF TOWERS TO REMAIN. PRIME AND PAINT.
12. (N) WALL SCONCE WITH (N) LED BULB.
13. (E) SWITCHGEAR PAINT TO MATCH MAIN BUILDING COLOR.
14. (E) WALL PACK TO REMAIN.

NOTES | B

VMI architecture
Design · Planning · Interiors
637 5th Avenue San Rafael, CA 94901
415-451-2500 415-451-2595 fax
www.vmiarchitecture.com

VMI JOB NUMBER
1856

LICENSED ARCHITECT
HUGH EDWARD MURPHY
No. C17928
REN. 10/31/19
STATE OF CALIFORNIA

CITY OF SAN JOSE
BUILDING DIVISION
B.P. #
DATE

RECORD DATES
DD SUBMITTAL -
BLDG. SUBMITTAL -
BID SET -
CONTRACT SET -

REVISIONS

CLIENT
Tambro Inc.
2780 Alum Rock Ave.
San Jose, CA 95127
STORE #024525

TACO BELL REMODEL
2770 Alum Rock Ave
San Josel, CA 95127
APN#: 484-20-037-2

TACO BELL
MOD EXPL
MID TERM

NEW
ROOF PLAN
A3-0

W:\Data\Tambro\1856_Tambro_SanJose_AlumRock_024525\03_cd_current\430_1856_A3-0.dwg By: ARCHASSOCIATE01 Saved on:6/14/2019 3:05:24 PM
ALL IDEAS, DESIGNS, ARRANGEMENTS AND PLANS INDICATED BY THIS DRAWING ARE OWNED BY, AND THE PROPERTY OF THIS OFFICE AND WERE CREATED, EVOLVED AND DEVELOPED FOR USE ON, AND IN CONNECTION WITH, THE SPECIFIED PROJECT. NONE OF SUCH IDEAS, DESIGNS, ARRANGEMENTS OR PLANS SHALL BE USED BY OR DISCLOSED TO ANY PERSON, FIRM OR CORPORATION FOR ANY PURPOSE WHATSOEVER WITHOUT THE WRITTEN PERMISSION OF PROJECT ARCHITECT.
WRITTEN DIMENSIONS ON THESE DRAWINGS SHALL HAVE PRECEDENCE OVER SCALE DIMENSIONS. CONTRACTORS SHALL VERIFY AND BE RESPONSIBLE FOR ALL DIMENSIONS AND CONDITIONS ON THE JOB AND THIS OFFICE MUST BE NOTIFIED OF ANY VARIATION FROM THE DIMENSIONS AND CONDITIONS SHOWN BY THESE DRAWINGS. SHOP DETAILS OF ADEQUATE SCALE MUST BE SUBMITTED TO THIS OFFICE FOR APPROVAL BEFORE PROCEEDING WITH FABRICATION ON ITEMS SO NOTED.

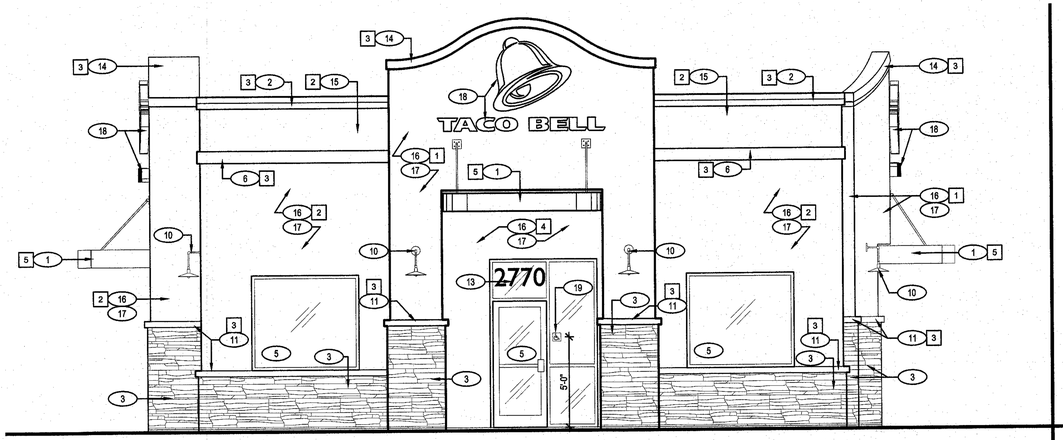

NEW NORTH ELEVATION 1/4" = 1'-0" | 1

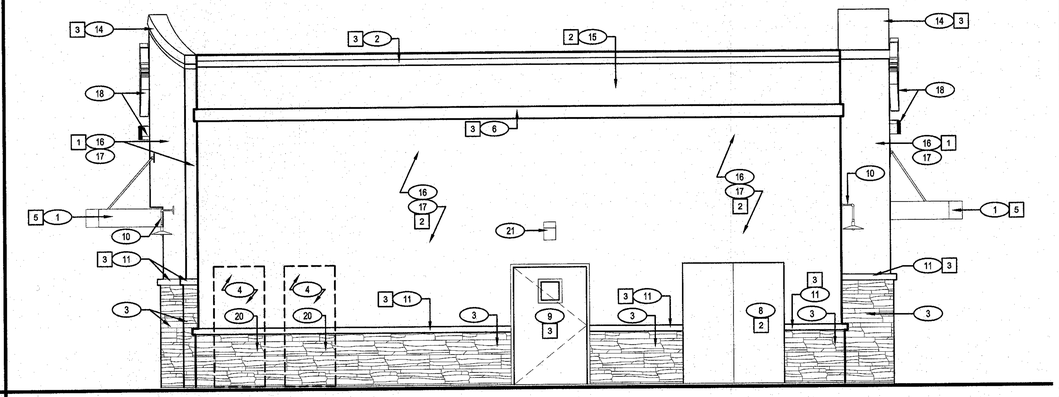

NEW SOUTH ELEVATION 1/4" = 1'-0" | 2

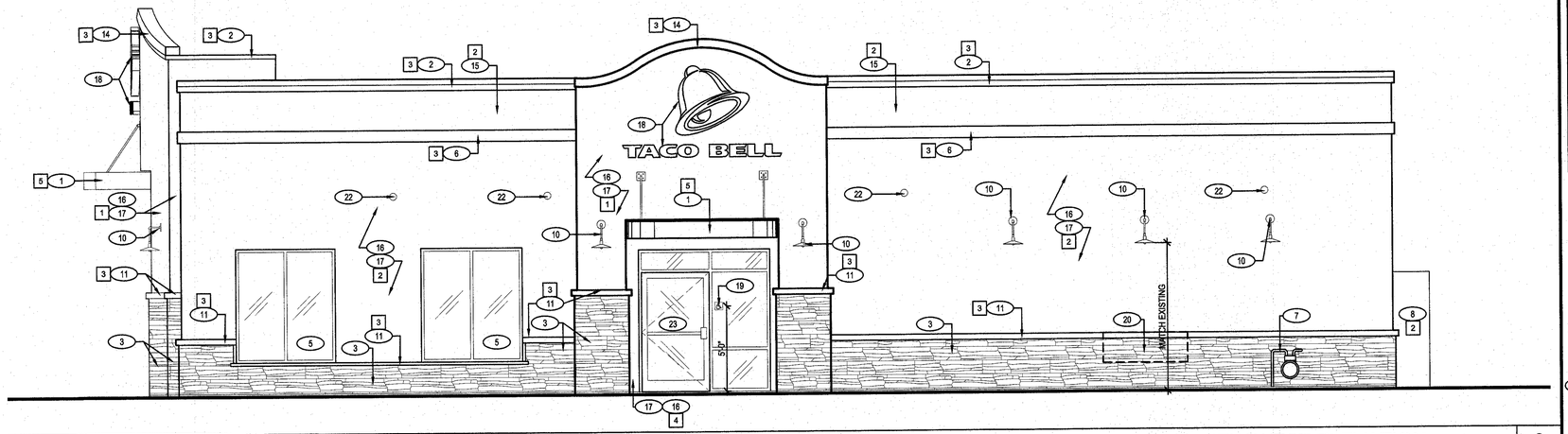

NEW WEST ELEVATION 1/4" = 1'-0" | 3

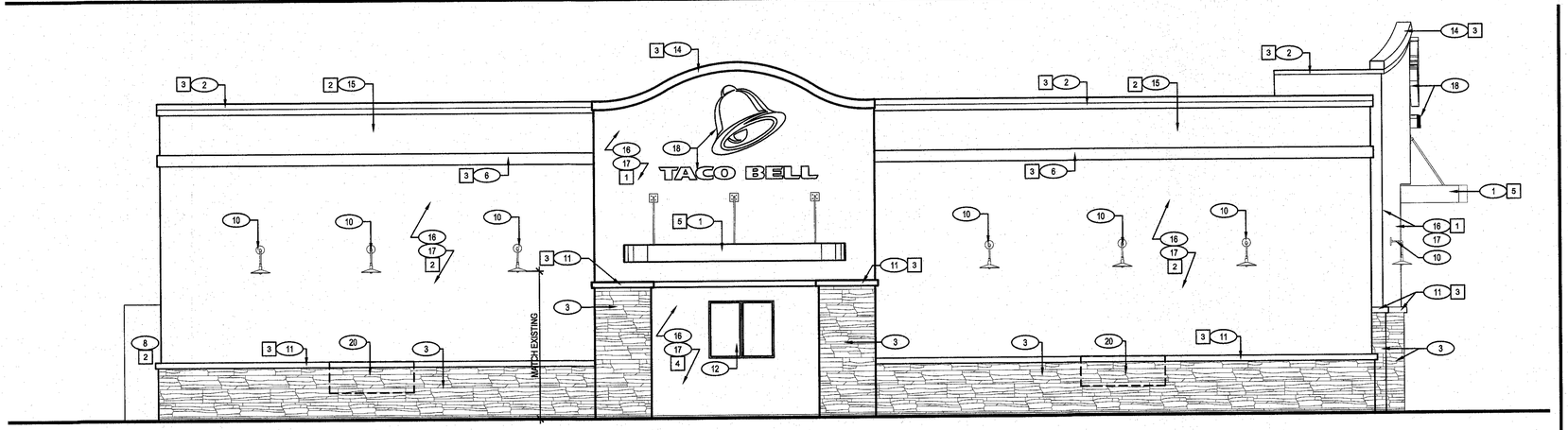

NEW EAST ELEVATION 1/4" = 1'-0" | 4

SYM.	AREA / MANUFACTURER	COLOR
1	TOWER SHERWIN WILLIAMS	PAINT SW7011 NATURAL CHOICE
2	MAIN BUILDING & DOWNSPOT/SCUPPER SHERWIN WILLIAMS	PAINT SW7030 ANEW GREY
3	PARAPET CAP, TOWER ELEMENTS, SERVICE DOOR SHERWIN WILLIAMS	PAINT SW7048 URBANE BRONZE
4	ACCENT WALL COLOR SHERWIN WILLIAMS	PAINT TB2603C CUSTOM PURPLE
5	CANOPY SHERWIN WILLIAMS	PAINT SW7675 SEAL SKIN

CONTACT INFORMATION:
SHERWIN WILLIAMS: BRAD HARRINGTON, 216-341-5558 X115 (PHONE),
BRAD.E.HARRINGTON@SHERWIN.COM
PRIMER: 1 COAT SW A24W1100, LOXON CONDITIONER
PRIMER: 2 COATS SW A82-100 SERIES, A-100 EXTERIOR LATEX SATIN

CEMENT PLASTER
ANY NEW CEMENT PLASTER TO BE 3-COAT CEMENT PLASTER O/2 LAYERS MIN GRADE D BUILDING PAPER WITH SELF FURRING METAL LATH PER CBC 2512.1 AND CBC 2510.6. PROVIDE A WEEP SCREED A AT THE BASE OF THE CEMENT PLASTER. WEEP SCREED TO BE MIN. 2" ABOVE CONCRETE SLAB OR 4" ABOVE EXPOSED EARTH PER CBC 2512.1.2.

EXTERIOR FINISH SCHEDULE | C

(#) KEYNOTE SYMBOL ON PLAN

1. EXISTING CANOPIES TO REMAIN, CLEAN AND PAINT.
2. EXISTING GALV. METAL CAP FLASHING - PRIME & PAINT.
3. (E) STONE TO REMAIN, PATCH AND REPAIR AS REQUIRED.
4. PATCH AND REPAIR WALL WHERE EQUIPMENT DOORS WERE REMOVED. REPAIR STUCCO / E.I.F.S SO SURFACE IS HOMOGENEOUS.
5. (E) DOORS AND STOREFRONT TO REMAIN. PROTECT DURING REMODEL.
6. PAINTED ACCENT BAND.
7. (E) GAS METER NO WORK.
8. (E) MAIN SWITCH GEAR TO REMAIN. PAINT TO MATCH (E) BUILDING.
9. (E) SERVICE DOOR & HARDWARE TO REMAIN. PAINT AS SHOWN.
10. (N) WALL SCONCE.
11. (E) WAINSCOT CAP TO REMAIN.
12. (E) DRIVE-THRU WINDOW TO REMAIN.
13. (E) ADDRESS NUMERALS TO REMAIN.
14. (E) ARCH ON TOP OF TOWERS TO REMAIN. PRIME & PAINT.
15. INFILL GROOVES IN EXISTING CEMENT PLASTER AND PAINT.
16. PREP ENTIRE BUILDING FOR NEW EXTERIOR PAINT. (E) CEMENT PLASTER. POWER WASH OUTSIDE OF BUILDING, SEAL AND REPAIR ANY CRACKS.
17. PATCH AND REPAIR STUCCO AS NEEDED.
18. (E) BUILDING SIGNS TO REMAIN.
19. (N) PROVIDE INTERNATIONAL SYMBOL OF ACCESSIBILITY AT 60" A.F.F.
20. INFILL EXISTING STONE WAINSCOT AND CAP TO MATCH EXISTING.
21. (E) WALL PACK TO REMAIN.
22. (E) ROOF DRAIN, RAIN WATER LEADER, AND OVERFLOW TO REMAIN.
23. REUSE EXISTING DOOR. MODIFY AS SHOWN ON ELEVATIONS. SEE DETAIL 10 / A6-0.

KEYNOTES | A

VMI architecture
Design · Planning · Interiors
637 5th Avenue San Rafael, CA 94901
415-451-2500 415-451-2595 fax
www.vmiarchitecture.com

VMI JOB NUMBER
1856

LICENSED ARCHITECT
HUGH EDWARD MURPHY
No. C17926
REN. 10/31/19
STATE OF CALIFORNIA

CITY OF SAN JOSE
BUILDING DIVISION
B.P. #
DATE

RECORD DATES
DD SUBMITTAL -
BLDG. SUBMITTAL -
BID SET -
CONTRACT SET -

REVISIONS

CLIENT
Tambro Inc.
2780 Alum Rock Ave.
San Jose, CA 95127
STORE #024525

TACO BELL REMODEL
2770 Alum Rock Ave
San Josel, CA 95127
APN#: 484-20-037-2

TACO BELL
MOD EXPL
MID TERM

NEW
EXTERIOR
ELEVATION

A4-0

W:\Data\Tambro\1856_Tambro_San.Jose_AlumRock_024525\03_cd_current\440_1856_A4-0.dwg By: ARCHASSOCIATE01 Saved on:6/14/2019 3:06:21 PM
ALL IDEAS, DESIGNS, ARRANGEMENTS AND PLANS INDICATED BY THIS DRAWING ARE OWNED BY, AND THE PROPERTY OF THIS OFFICE AND WERE CREATED, EVOLVED AND DEVELOPED FOR USE ON, AND IN CONNECTION WITH, THE SPECIFIED PROJECT. NONE OF SUCH IDEAS, DESIGNS, ARRANGEMENTS AND PLANS SHALL BE USED BY OR DISCLOSED TO ANY PERSON, FIRM OR CORPORATION FOR ANY PURPOSE WHATSOEVER WITHOUT THE WRITTEN PERMISSION OF PROJECT ARCHITECT.
WRITTEN DIMENSIONS ON THESE DRAWINGS SHALL HAVE PRECEDENCE OVER SCALE DIMENSIONS. CONTRACTORS SHALL VERIFY AND BE RESPONSIBLE FOR ALL DIMENSIONS AND CONDITIONS ON THE JOB AND THIS OFFICE MUST BE NOTIFIED OF ANY VARIATION FROM THE DIMENSIONS AND CONDITIONS SHOWN BY THESE DRAWINGS. SHOP DRAWINGS SHALL MUST BE SUBMITTED TO THIS OFFICE FOR APPROVAL BEFORE PROCEEDING WITH FABRICATION ON ITEMS SO NOTED.

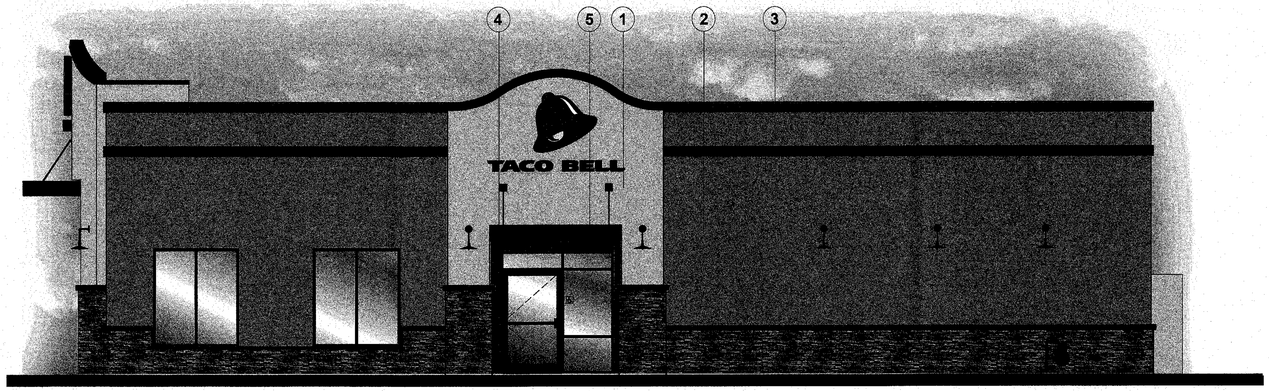

WEST ELEVATION

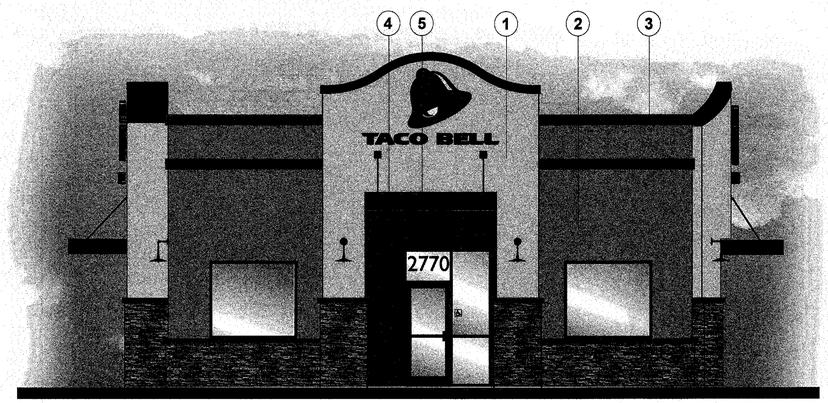

NORTH ELEVATION

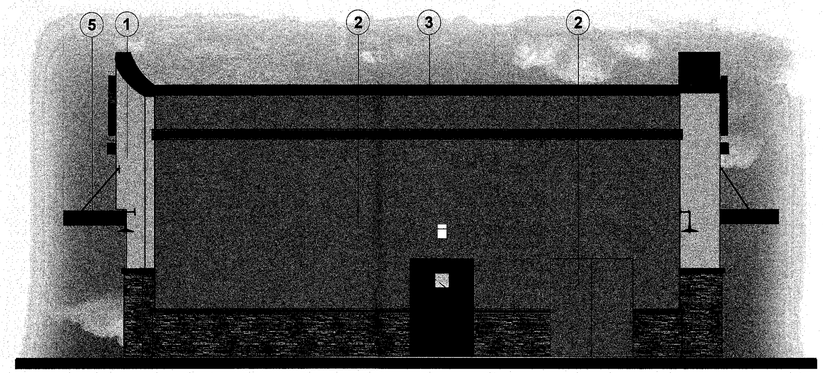

SOUTH ELEVATION

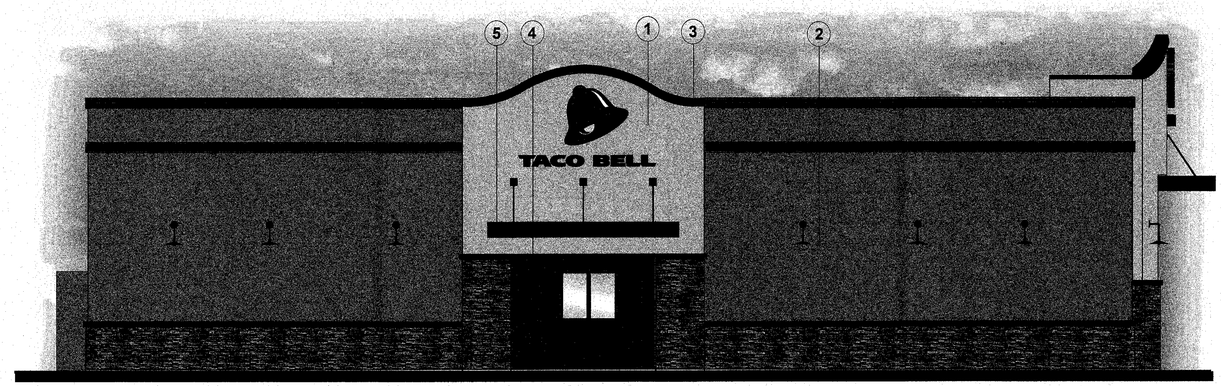

EAST ELEVATION

LEGEND:

1. **Tower Color and Trim Band Collor SW 7011 "Natural Choice"**
2. **Main Building Color and Main Switchgear SW 7030 "Anew Gray"**
3. **Arch Color, Parapet Cap and Service Door SW 7048 "Urbane Bronze"**
4. **Accent Wall Color SW "TB2603-C Custom Purple"**
5. **Canopy Color SW 7675 "Sealskin"**

NOTE: *Wainscot Stone to remain.
****Signage to remain.**

COLOR EXTERIOR ELEVATION | A

W:\Data\Tambro\1856_Tambro_San.Jose_AlumRock_02452503_cd_current\450_1856_A5-0.dwg By: ARCHASSOCIATE01 Saved on:6/6/2019 1:33:15 PM
ALL IDEAS, DESIGNS, ARRANGEMENTS AND PLANS INDICATED OR REPRESENTED BY THIS DRAWING ARE OWNED BY, AND THE PROPERTY OF THIS OFFICE AND WERE CREATED, EVOLVED AND DEVELOPED FOR USE ON AND IN CONNECTION WITH, THE SPECIFIED PROJECT. NONE OF SUCH IDEAS, DESIGNS, ARRANGEMENTS OR PLANS SHALL BE USED BY OR DISCLOSED TO ANY PERSON, FIRM OR CORPORATION FOR ANY PURPOSE WHATSOEVER WITHOUT THE WRITTEN PERMISSION OF PROJECT ARCHITECT.
WRITTEN DIMENSIONS ON THESE DRAWINGS SHALL HAVE PRECEDENCE OVER SCALE DIMENSIONS. CONTRACTORS SHALL VERIFY AND BE RESPONSIBLE FOR ALL DIMENSIONS AND CONDITIONS ON THE JOB AND THIS OFFICE MUST BE NOTIFIED OF ANY VARIATION FROM THE DIMENSIONS AND CONDITIONS SHOWN BY THESE DRAWINGS. SHOP DETAILS OF ADEQUATE SCALE MUST BE SUBMITTED TO THIS OFFICE FOR APPROVAL BEFORE PROCEEDING WITH FABRICATION ON ITEMS SO NOTED.

VMI architecture
Design · Planning · Interiors
637 5th Avenue San Rafael, CA 94901
415-451-2500 415-451-2595 fax
www.vmiarchitecture.com

VMI JOB NUMBER
1856

LICENSED ARCHITECT
HUGH EDWARD MURPHY
No. C17928
REN. 10/31/19
STATE OF CALIFORNIA

CITY OF SAN JOSE
BUILDING DIVISION
B.P. #
DATE

RECORD DATES
DD SUBMITTAL -
BLDG. SUBMITTAL -
BID SET -
CONTRACT SET -

REVISIONS

CLIENT
Tambro Inc.
2780 Alum Rock Ave.
San Jose, CA 95127
STORE #024525

TACO BELL REMODEL
2770 Alum Rock Ave
San Josel, CA 95127
APN#: 484-20-037-2

TACO BELL
MOD EXPL
MID TERM

COLOR
EXTERIOR
ELEVATION

A5-0

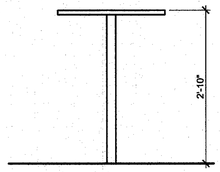

SEE 2/ADA2 FOR REACH LIMITS AND FURTHER INFORMATION.

TABLE SECTION 3/4" = 1'-0" 17

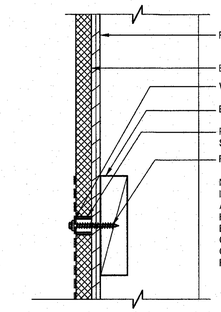

NOTE:
INSTALL BUSHING AFTER E.I.F.S. APPLICATION HAS HARDENED. DRILL HOLE SLIGHTLY LARGER THAN BUSHING THROUGH INSULATION ONLY, STOP AT PLYWOOD. CAULK OPENING PRIOR TO INSERTING FASTENER TO SEAL PENETRATION.

YAW023

CONNECTION THRU STUCCO 3" = 1'-0" **13**

1. DIMENSIONS ON THIS DWG. ARE TO FRAME EDGE. REFER TO SHEETS A1.0.
2. ENTIRE STOREFRONT SYSTEM SHALL BE CLEAR ANODIZED.
3. SEE SCHEDULE FOR GLASS TYPES.
4. REFER TO FLOOR PLAN, ELEVATIONS AND WALL SECTIONS FOR ROUGH OPENING DIMENSIONS.
5. ALL STOREFRONT MATERIAL AND GLAZING SHALL BE SUPPLIED AND INSTALLED BY G.C. U.O.N.
6. (N) READILY VISIBLE, DURABLE SIGN TO BE POSTED ON OR ADJACENT TO DOOR STATING "THIS DOOR TO REMAIN UNLOCKED WHEN BUILDING IS OCCUPIED". SIGN NOT LESS THAN 1 INCH IN HEIGHT ON CONTRASTING BACKGROUND.

GLASS SCHEDULE

(A) 1" INSULATED GLASS
(B) 1" INSULATED TEMPERED GLASS
(C) 1/4" TEMPERED GLASS
(D) SAFETY GLASS BY MFR.

NOTE:
SHADING COEFFICIENT SPECIFICATION PER LOCAL CODE REQUIREMENTS. DAYTIME VISIBILITY INTO DINING ROOM SHALL BE MAINTAINED.

**** ALL STOREFRONT GLAZING SHALL BE LOW "E" SOLAR GLASS ****

GREEN

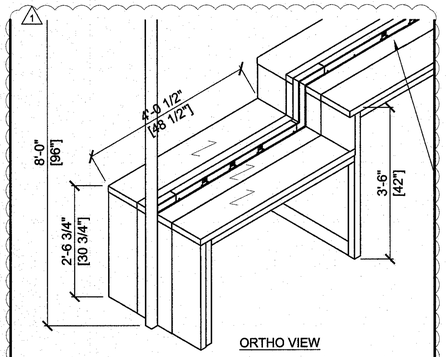

HUBTABLE DETAILS N.T.S. **5**

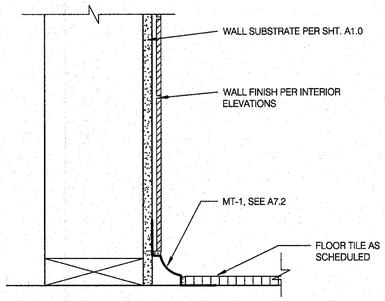

SCHLUTER BASE N.T.S. **1**

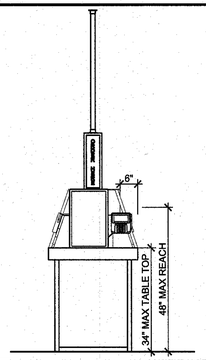

KIOSK REACH & RANGE 1/2" = 1'-0" 18

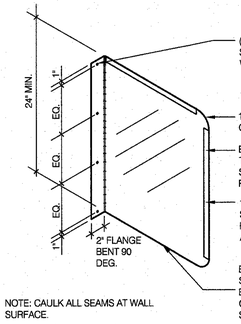

NOTE: CAULK ALL SEAMS AT WALL SURFACE.

YAW036

SPLASH GUARD 1" = 1'-0" **14**

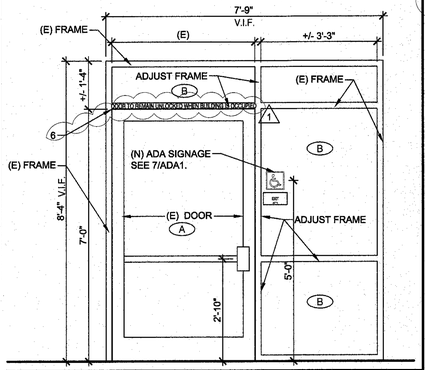

STOREFRONT 1/2" = 1'-0" 10

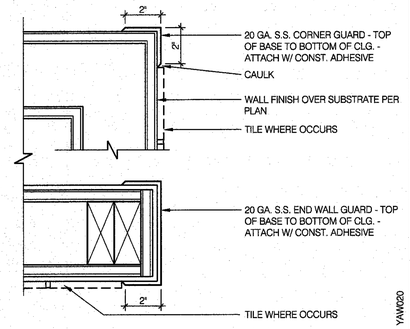

YAW020

S/S CORNER GUARDS 3" = 1'-0" **6**

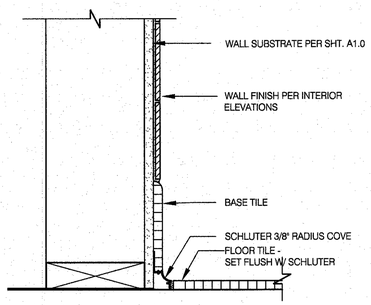

BASE @ RESTROOM 3" = 1'-0" **2**

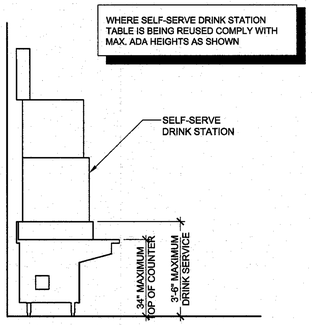

DRINK STATION N.T.S. **19**

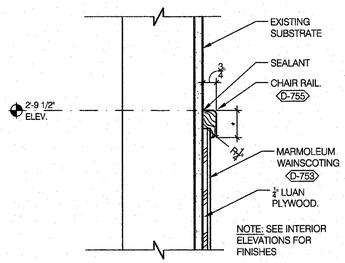

NOTE: SEE INTERIOR ELEVATIONS FOR FINISHES

YAF059

CHAIR RAIL DETAIL 3" = 1'-0" **15**

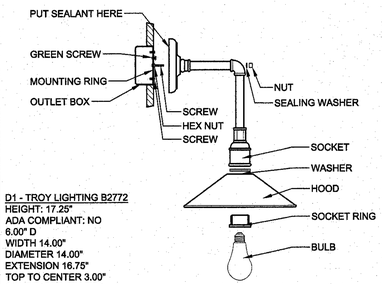

D1 - TROY LIGHTING B2772
HEIGHT: 17.25"
ADA COMPLIANT: NO
6.00" D
WIDTH 14.00"
DIAMETER 14.00"
EXTENSION 16.75"
TOP TO CENTER 3.00"
COLOR: OLD SILVER
SOCKET TYPE: E26 MEDIUM BASE
1 BULB LED 20 WATTS

DETAIL EXTERIOR WALL SCONCE 1/16" = 1'-0" 11

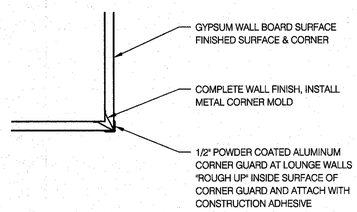

DECOR CORNER GUARD N.T.S. **7**

NOT USED N.T.S. **3**

REFERENCE ONLY

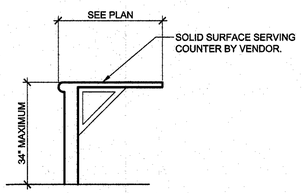

FRONT COUNTER SECTION N.T.S. **20**

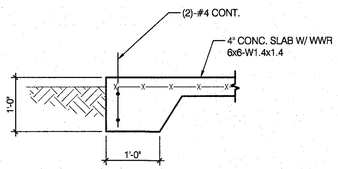

PATIO SLAB EDGE DETAIL N.T.S. **16**

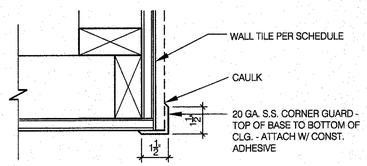

SS. CORNER GUARD N.T.S. **12**

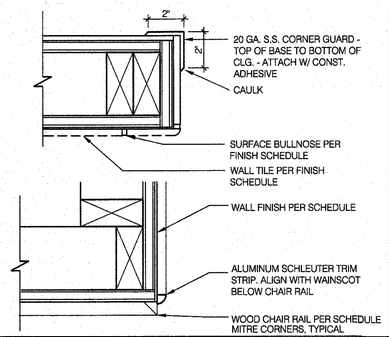

FINISH TRANSITIONS N.T.S. **8**

TILE INSTALLATION REQUIRES MANUFACTURERS STANDARD MOLDED CORNERS AT BOTH INSIDE AND OUTSIDE CORNERS.

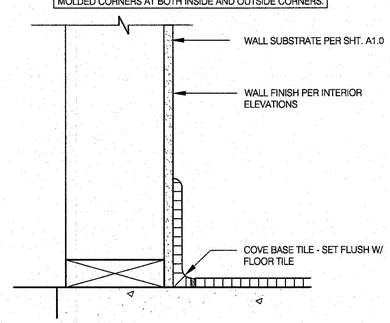

BASE @ GYP. BD. 3"=1'-0" **4**

VMI architecture
Design · Planning · Interiors
637 5th Avenue San Rafael, CA 94901
415-451-2500 415-451-2595 fax
www.vmiarchitecture.com

VMI JOB NUMBER
1856

LICENSED ARCHITECT
HUGH EDWARD MURPHY
No. C17928
REN. 10/31/19
STATE OF CALIFORNIA

CITY OF SAN JOSE BUILDING DIVISION
B.P. #
DATE

RECORD DATES
DD SUBMITTAL -
BLDG. SUBMITTAL -
BID SET -
CONTRACT SET -

REVISIONS
1 07/24/19 BLDG - PC-1

CLIENT
Tambro Inc.
2780 Alum Rock Ave.
San Jose, CA 95127
STORE #024525

TACO BELL REMODEL
2770 Alum Rock Ave
San Josel, CA 95127
APN#: 484-20-037-2

TACO BELL
MOD EXPL
MID TERM

FINISH DETAILS
A6-0

W:\Data\Tambro\1856_Tambro_SanJose_AlumRock_024525\03_cd_current\462_1856_A6-0.dwg By: ARCHASSOCIATED1 Saved on:7/24/2019 5:23:47 PM
ALL IDEAS, DESIGNS, ARRANGEMENTS AND PLANS INDICATED BY THIS DRAWING ARE OWNED BY, AND THE PROPERTY OF THIS OFFICE AND WERE CREATED, EVOLVED AND DEVELOPED FOR USE ON, AND IN CONNECTION WITH, THE SPECIFIED PROJECT. NONE OF SUCH IDEAS, DESIGNS, ARRANGEMENTS AND PLANS SHALL BE USED BY OR DISCLOSED TO ANY PERSON, FIRM OR CORPORATION FOR ANY PURPOSE WHATSOEVER WITHOUT THE WRITTEN PERMISSION OF PROJECT ARCHITECT.
WRITTEN DIMENSIONS ON THESE DRAWINGS SHALL HAVE PRECEDENCE OVER SCALE DIMENSIONS. CONTRACTORS SHALL VERIFY AND BE RESPONSIBLE FOR, ALL DIMENSIONS AND CONDITIONS ON THE JOB AND THIS OFFICE MUST BE NOTIFIED OF ANY VARIATION FROM THE DIMENSIONS AND CONDITIONS SHOWN BY THESE DRAWINGS. SHOP DETAILS OF ADEQUATE SCALE MUST BE SUBMITTED TO THIS OFFICE FOR APPROVAL BEFORE PROCEEDING WITH FABRICATION ON ITEMS SO NOTED.

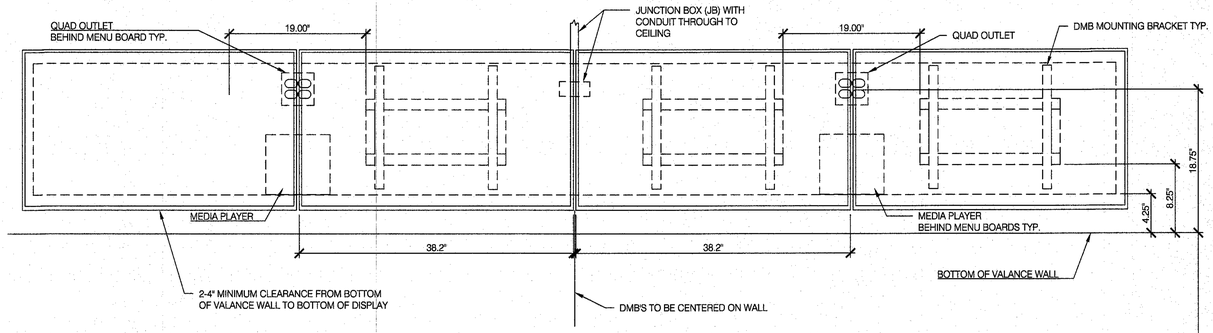

NOTES:

1. EC/GC TO INSTALL A TOTAL OS (4) IG5262 DUPLEX OUTLETS IN (2) QUAD BOXES ON FRONT OF VALANCE WALL AS SHOWN. OUTLETS TO BE ORANGE AND STRAIGHT BLADE.
2. EC/GC TO EVALUATE VALANCE WALL STRUCTURE TO ENSURE ADEQUATE SUPPORT OF DIGITAL MENU BOARDS EQUIPMENT EC/GC TO INSTALL ADDITIONAL BACKING MATERIALS (AS REFERENCED ON DRAWINGS) AS NEEDED TO ENSURE ADEQUATE SUPPORT OF DIGITAL MENU BOARDS
3. EC/GC TO INSTALL (1) DATA JUNCTION (JB) IN VALANCE WALL AS SHOWN. CONDUIT TERMINATED ABOVE CEILING TO HAVE BUSHING.
4. EC/GC TO FUN (3) CAT6 LINES FROM NETWORK SWITCH TO DATA JUNCTION BOX. CAT6 LINES SHOULD HAVE BOTH PROPERLY TERMINATED WITH RJ-45 CONNECTORS. EXCESS CAT6 CABLE TO BE COILED INTO SERVICE LOOPS AT EACH END AND LEFT ACCESSIBLE FOR DMB INSTALL TEA. CAT6 TO BE RUN IN ACCORDANCE WITH ALL LOCAL MUNICIPALITY CODE REQUIREMENTS.
5. EC/GC SHALL ACQUIRE AND SECURE NY/ALL REQUIRED PERMITTING FOR THE WORK MENTIONED ABOVE PER MUNICIPALITY CODE REQUIREMENTS.
6. DRAWING PROVIDED IS FOR INSTALLATION OF DMB EQUIPMENT ONLY. NOT TO BE USED FOR ARCHITECTURAL PURPOSES. IF PLACEMENT OF REQUIRED ELEMENTS CANNOT BE MET AND WILL EXCEED A 3IN DEVIATION, STRATACACHE MUST BE NOTIFIES IMMEDIATELY.

VALANCE WALL REQUIREMENTS
26.2" H x 156.8" L (MINIMUM)

IF YOUR VALANCE WALL DOES NOT MEET THESE REQUIREMENTS PLEASE NOTIFY STRATACACHE IMMEDIATELY

ELECTRICAL SCHEDULE

QTY	DESCRIPTION	VOLT/PH	BRK SIZE	COND/WIRE	PNL/CCT	RECP TYPE	HGT AFF	REQUIREMENT & REMARKS

WALL MOUNTED DMB DETAIL N.T.S. | 10

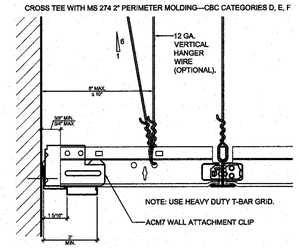

CEILING @ WALL 3" = 1'-0" | 5

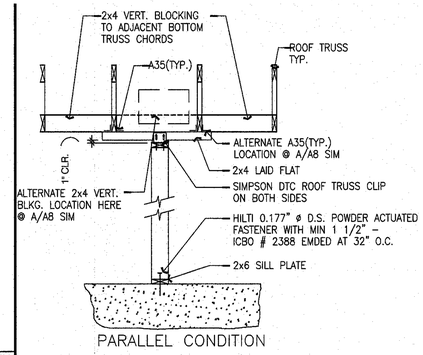

PARALLEL CONDITION

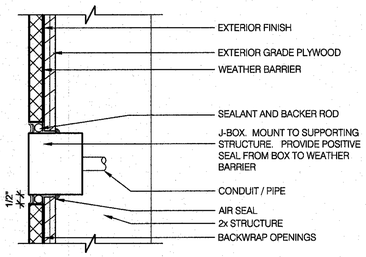

CO2 FILL / J-BOX 3" = 1'-0" | 6

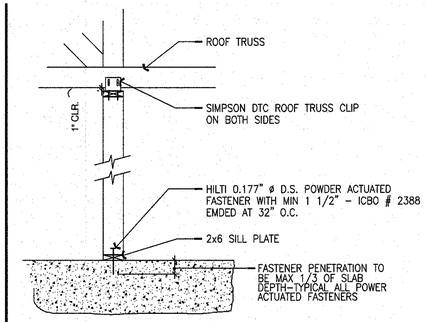

PERPENDICULAR CONDITION

TYP. NON-BEARING INT. WALL 1/2" = 1'-0" | 2

NOT USED | 16

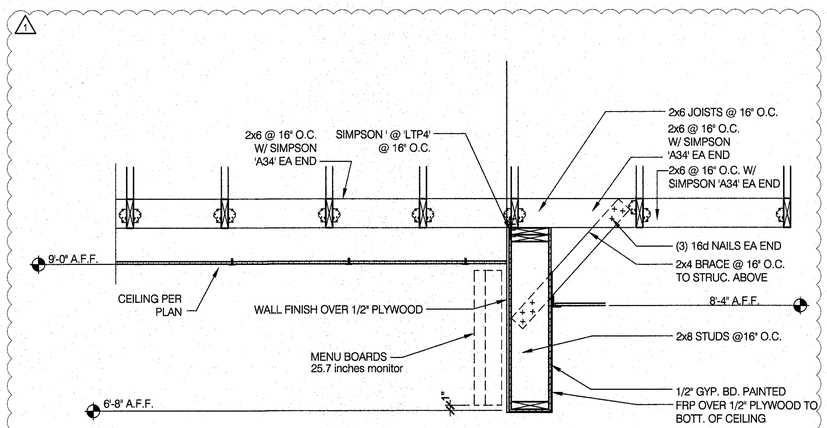

NOTE: ALLOWABLE ALTERNATE FRAMING: 3-5/8" MTL. STUDS W/FLEX TRACK FOR BULKHEAD FRAMING.

MENU BOARD/SOFFIT SECTION 3/4" = 1'-0" | 8

COMPRESSION STRUT ELECTRICAL METALLIC TUBING SIZE

(DIA)	L (MAX. HT)
1/2"	4'-0"
3/4"	5'-2"
	6'-6"
1-1/4"	8'-6"
1-1/2"	9'-10"
	12'-7"
2-1/2"	16'-6"
	20'-2"
	26'-0"

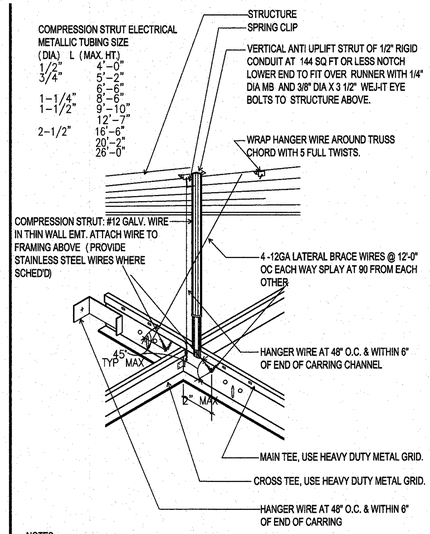

NOTES:

1. SEE CBC SECTION 1613.1 AND ASCE 7-05 13.5.69 FOR ADDITIONAL INFO.
2. SUPPORT EACH LIGHT FIXTURE INDEPENDANTLY OF CEILING GRID WITH (1) #12 WIRE AT 2 OPPOSITE CORNERS. PROVIDE EARTHQUAKE CLIPS AT ALL FLUORESCENT FIXTURES
3. WIRES SHALL BE ATTACHED TO GRID AND STRUCTURE SIO THAT THEY CAN 200 LB. (MIN.) OR ACTUAL LOAD (WHICHEVER IS GREATER) WITH A SAFETY FACTOR OF 2.
4. STRUT & BRACING WIRES SHALL BE AT SAME LOCATIONS AND MUST START WITHIN 6'.
5. INSTALL CEILING TO MEET ASTM C625 AND C636.

CEILING DETAIL N.T.S. | 4

VMI architecture
Design · Planning · Interiors
637 5th Avenue San Rafael, CA 94901
415-451-2500 415-451-2595 fax
www.vmiarchitecture.com

VMI JOB NUMBER
1856

LICENSED ARCHITECT
HUGH EDWARD MURRY
No. C17928
REN. 10/31/19
STATE OF CALIFORNIA

CITY OF SAN JOSE
BUILDING DIVISION
B.P. #
DATE

RECORD DATES

DD SUBMITTAL	-
BLDG. SUBMITTAL	-
BID SET	-
CONTRACT SET	-

REVISIONS

1 07/24/19	BLDG - PC-1

CLIENT
Tambro Inc.
2780 Alum Rock Ave.
San Jose, CA 95127
STORE #024525

TACO BELL REMODEL
2770 Alum Rock Ave
San Josel, CA 95127
APN#: 484-20-037-2

TACO BELL
MOD EXPL
MID TERM

FINISH DETAILS
A6-1

W:\Data\Tambro\1856_Tambro_SanJose_AlumRock_024525\03_cd_current\463_1856_A6-1.dwg By: ARCHASSOCIATE01 Saved on:7/26/2019 10:57:51 AM
ALL IDEAS, DESIGNS, ARRANGEMENTS AND PLANS INDICATED BY THIS DRAWING ARE OWNED BY, AND THE PROPERTY OF THIS OFFICE AND WERE CREATED, EVOLVED AND DEVELOPED FOR USE ON, AND IN CONNECTION WITH, THE SPECIFIED PROJECT. NONE OF SUCH IDEAS, DESIGNS, ARRANGEMENTS AND PLANS SHALL BE USED BY OR DISCLOSED TO ANY PERSON, FIRM OR CORPORATION FOR ANY PURPOSE WHATSOEVER WITHOUT THE WRITTEN PERMISSION OF PROJECT ARCHITECT.
WRITTEN DIMENSIONS ON THESE DRAWINGS SHALL HAVE PRECEDENCE OVER SCALE DIMENSIONS. CONTRACTORS SHALL VERIFY AND BE RESPONSIBLE FOR ALL DIMENSIONS AND CONDITIONS ON THE JOB AND THIS OFFICE MUST BE NOTIFIED OF ANY VARIATION FROM THE DIMENSIONS AND CONDITIONS SHOWN BY THESE DRAWINGS.

W:\Data\Tambro\1856_Tambro_SanJose_AlumRock_02452\03_cd_current\470_1856_A7-0.dwg By: ARCHASSOCIATE01 Saved on:6/14/2019 3:08:38 PM
ALL IDEAS, DESIGNS, ARRANGEMENTS AND PLANS INDICATED BY THIS DRAWING ARE OWNED BY, AND THE PROPERTY OF THIS OFFICE AND WERE CREATED, EVOLVED AND DEVELOPED FOR USE ON, AND IN CONNECTION WITH, THE SPECIFIED PROJECT. NONE OF SUCH IDEAS, DESIGNS, ARRANGEMENTS OR PLANS SHALL BE USED BY OR DISCLOSED TO ANY PERSON, FIRM OR CORPORATION FOR ANY PURPOSE WHATSOEVER WITHOUT THE WRITTEN PERMISSION OF PROJECT ARCHITECT.
WRITTEN DIMENSIONS ON THESE DRAWINGS SHALL HAVE PRECEDENCE OVER SCALE DIMENSIONS. CONTRACTORS SHALL VERIFY AND BE RESPONSIBLE FOR ALL DIMENSIONS AND CONDITIONS ON THE JOB AND THIS OFFICE MUST BE NOTIFIED OF ANY VARIATION FROM THE DIMENSIONS AND CONDITIONS SHOWN BY THESE DRAWINGS. SUBMITTED TO THIS OFFICE FOR APPROVAL BEFORE PROCEEDING WITH FABRICATION OR ITEMS DO NOTED.

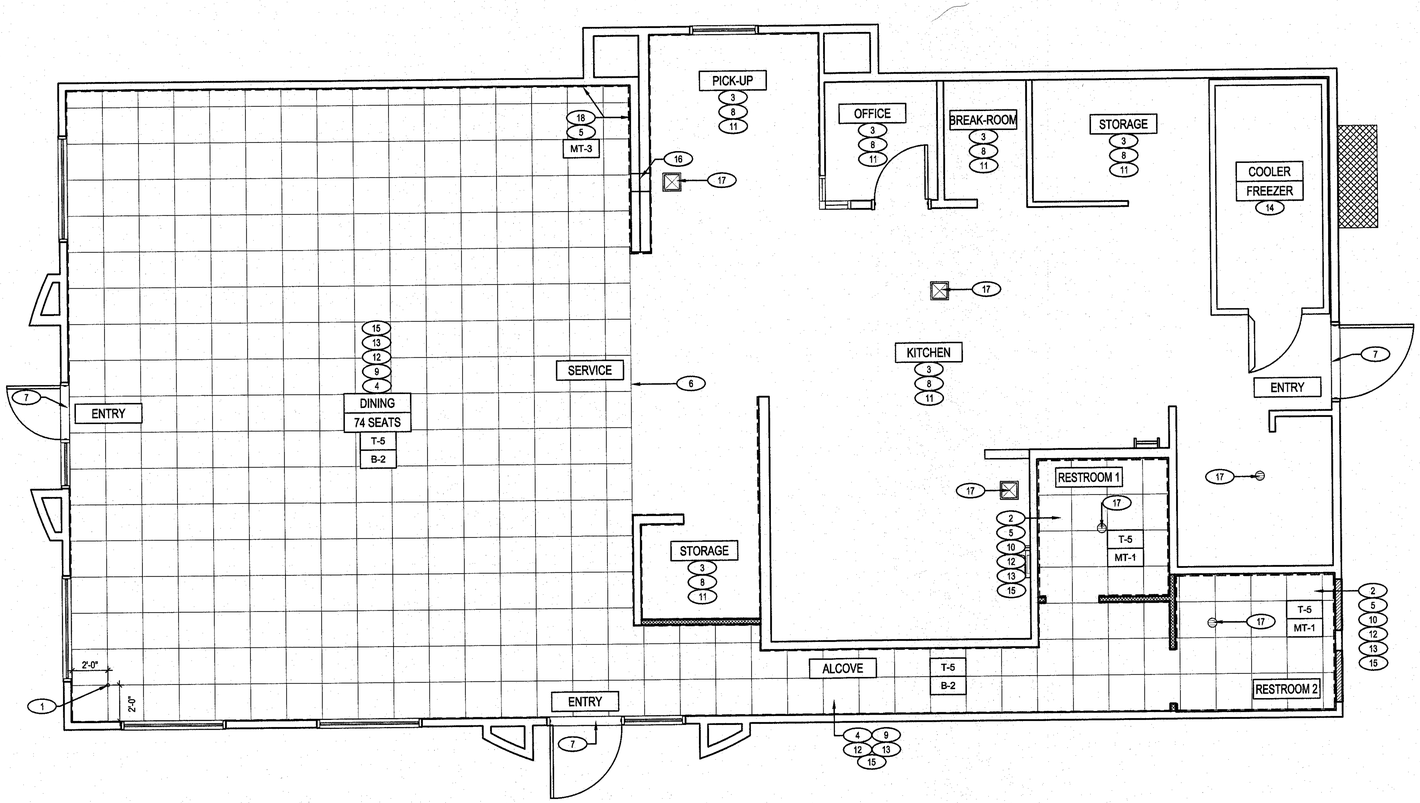

NOTES:

REPAIR / REPLACE ANY DAMAGED KITCHEN FLOOR TILES

NOTES:

SEE INTERIOR ELEVATIONS, SHEETS A8.0 & A8.1 FOR WALL TILE APPLICATION.

NORTH

FINISH FLOOR PLAN 1/4"=1'-0" **A**

NOT USED **D**

FINISH NOTES **C**

A. SEE INTERIOR ELEVATIONS FOR PAINTING, GYPSUM BOARD AND TILE.

B. ▭ DENOTES FINISH MATERIAL. REFER TO SHT A7.2 FOR FINISHES.

C. TILE JOINTS (U.O.N.):
1. QUARRY FLOOR TILE : 1/4"
2. CERAMIC FLOOR TILE : 3/16"
3. GLAZED WALL TILE : 1/8"
4. BASE, TRIM AND ACCESSORIES : MATCH ADJOINING TILE UNITS

D. PROVIDE BREAK IN TILE TO MATCH-UP WITH EXPANSION & CONTROL JOINTS IN SLAB.

E. ALL BASE TILE SHALL BE SANITARY COVE STYLE WITH 3/8" MIN RADIUS.

F. SEE SCOPE OF WORK SHEETS FOR RESPONSIBILITIES.

G. PROVIDE CLEAR SILICONE CAULK WHERE FRP STOPS AT TOP OF COVE BASE AT NEW CONSTRUCTION.

H. PROVIDE CLEAR SILICONE CAULK WHERE ALL FIXED AND BUILT-IN COUNTERS / EQUIPMENT ABUTS WALL SURFACE.

I. SEE SHEET A1.0 FOR REFERENCES OF INTERIOR ELEVATIONS.

J. ALL GROUT CAULK TO MATCH SPECIFIED GROUT COLOR.

KEY NOTES **B**

(#) KEYNOTE SYMBOL ON PLAN.

1. TILE STARTING POINT.
2. TOILETS SHALL BE REMOVED BEFORE TILE INSTALLATION AND THEN REPLACED.
3. (E) FLOOR TILE AND BASE TO REMAIN. REPAIR AND/OR REPLACE ANY CRACKED TILES.
4. (N) FLOOR TILE, BASE AND WAINSCOT IN DINING AND ALCOVE.
5. (N) INTERIOR WALL TILE IN RESTROOMS AND DRINK STATION.
6. TRANSITION TO DINING ROOM TILE AT FRONT EDGE OF SERVING COUNTER.
7. G.C. TO CONFIRM THAT THRESHOLDS MEET ADA REQUIREMENTS.
8. STEAM CLEAN TILE IN THE KITCHEN AREA AND RE-GROUT AND RESEAL JOINTS.
9. INSTALL FLOOR TILE IN A STRAIGHT STACK BOND.
10. INSTALL FLOOR TILE IN A STRAIGHT STACK BOND IN RESTROOMS.
11. CLEAN AND REPAIR (E) FRP IN KITCHEN, OFFICE AND BREAK-ROOM.
12. PATCH CONCRETE SLAB AND CORE HOLES AS NEEDED IN DINING AND RESTROOMS PRIOR TO LAYING NEW TILE.
13. (E) REPAIR WALL DAMAGE WHERE TILE AND TILE BASE WERE REMOVED.
14. (E) WALK-IN COOLER/ FREEZER TO REMAIN. STEAM CLEAN, REPAIR OR REPLACE ANY CRACKED TILES.
15. G.C. SHALL REPAIR ANY DAMAGED SUBSTRATE BEFORE INSTALLATION OF NEW TILE/SCHLUTER BASE. PROVIDE A CLEAR SILICONE SEAL PAINT AT THE TOP OF THE BASE.
16. TIE (E) DRINK STATION DRAIN IN DINING THRU WALL TO (E) FLOOR SINK.
17. (E) FLOOR SINK AND FLOOR DRAINS TO REMAIN.
18. BASE AT DRINK STATION TO HAVE MIN 3/8" RADIUS.

VMI architecture
Design · Planning · Interiors
537 5th Avenue San Rafael, CA 94901
415-451-2500 415-451-2595 fax
www.vmiarchitecture.com

VMI JOB NUMBER
1856

LICENSED ARCHITECT
HUGH EDWARD MURPHY
No. C17928
REN. 10/31/19
STATE OF CALIFORNIA

CITY OF SAN JOSE
BUILDING DIVISION
B.P. #
DATE

RECORD DATES
DD SUBMITTAL -
BLDG. SUBMITTAL -
BID SET -
CONTRACT SET -

REVISIONS

CLIENT
Tambro Inc.
2780 Alum Rock Ave.
San Jose, CA 95127
STORE #024525

TACO BELL REMODEL
2770 Alum Rock Ave
San Josel, CA 95127
APN#: 484-20-037-2

TACO BELL
MOD EXPL
MID TERM

FINISH
FLOOR PLAN
A7-0

SYMBOL	MANUFACTURER	STYLE	COLOR	SIZE	GROUT	Comments	ALTERNATE FINISH
CEILING							
CL-1	CEILUME	CEILING TILE	WHITE	2X4		PAINT EXISTING GRID / DIFFUSERS SW 6080 UTTERLY BEIGE. INSTALL TILES USING MFG. RECOMMENDED CLIPS. REF. C/A7.1	
CL-2	CEILUME	STRATFORD CEILING TILE	LATTE	2X2		INSTALL TILES USING MFG. RECOMMENDED CLIPS. REF. C/A7.1	
CL-16	N/A	GYPSUM BOARD	PAINT P-12			FRAME WITH 2X6 STUDS @16"	
CEILING GRID							
CL-12	ARMSTRONG	PRELUDE 15/16" EXPOSED TEE	SW6080 UTTERLY BEIGE				
CHAIR RAIL							
CR-1	N/A	STAINED MAPLLE CHAIR RAIL	MINWAX CLASSIC GRAY STAIN	1"X 2"		APPLY 2 COATS OF STAIN PER MANUFACTURER'S SPECIFICATIONS. SAND AND FILL ALL HOLES PRIOR TO STAINING	
FLOOR BASE							
B-2	EUROWEST	URBAN WEAVE - X606292X8	GREY	4X24	MAPEI # 2 PEWTER		CREATIVE MATERIALS CORP. - URBAN WEAVE
FLOORING							
T-5	EUROWEST	URBAN WEAVE - X606292X8	GREY	24X24	MAPEI # 2 PEWTER		CREATIVE MATERIALS CORP. - MOTIF GREY
LAMINATE							
L-4	NEVAMAR	WK0027-T	BAILEY				
L-4A	WILSONART	17005K-57	MORRIS OAK			ALTERNATE TO L-4	
L-11	WILSONART RECOVER	4888-38	RUSTIC SLATE			FINE VELVET FINISH	
METAL TRANSITION							
MT-1	SCHLUTER	DILEX AHK	AT: SATIN NICKEL ANODIZED ALUMINUM		MAPEI # 11 SAHARA BEIGE	FOR STORES IN CAILFORNIA ONLY: AE: SATIN ANODIZED ALUMINUM	
MT-2	SCHLUTER	JOLLY	SATIN ANODIZED ALUMINUM			VERTICAL TRIM AT WALL TILE TO GYPSUM BOARD TRANSITION DINING / POS AREA	
MT-3	SCHLUTER	DILEX AHK	EB: BRUSHED STAINLESS STEEL			BRUSHED STAINLESS STEEL TRIM AT TILE WALL IN DINING ROOM	
MT-4			SATIN ANODIZED ALUMINUM			METAL TRIM AT VERITCAL WAINSCOT SEAMS AND EXPOSED CORNERS	
MT-5			BLACK			1/2" DECORATIVE METAL TRIM AT EXPOSED EDGES AND VERTICAL SEAMS; AND 1/2" x 1/2" CORNER TRIM AT OUTSIDE CORNERS ON POS COUNTER AND MILLWORK	
SOLID SURFACE							
SS-1	STARON	BW010	BRIGHT WHITE			1/2" SS GLUED TO 3/4" PLYWOOD BACKING	
WALL COVERING							
WC-1	WOLF GORDON	'RAMPART' HIGH IMPACT WALL COVERING	FOUNDATION/ PIGMENT (GOH 12172606)			RAILROAD INSTALLATION : THERE SHOULD BE NO SEAMS ALONG WALLS	
WALL PAINT							
P-2	SHERWIN WILLIAMS	SW 7043	WORLDLY GRAY	N/A	N/A	SEMI-GLOSS PRIMER: #023 (WHITE) FRESH START 100% ACRYLIC	
P-3	SHERWIN WILLIAMS	SW 7026	GRIFFIN, SEMI-GLOSS			DOOR FRAMES	
P-12	SHERWIN WILLIAMS	SW 7043	WORLDY GRAY			FLAT FINISH	
WALL TILE							
T-2	EUROWEST	TERRECOTTE NERO PAV. SQ. MIXED		8X8	MAPEI # 47 CHARCOAL	ACCENT WALL RESTROOM	CREATIVE MATERIALS CORP. - TERRA DECO MIX
T-3	EUROWEST	TERRE NERO		8X8	MAPEI # 47 CHARCOAL	WALL RESTROOM	CREATIVE MATERIALS CORP. - TERRA ANTHRACITE
T-4	EUROWEST	ARCTIC ANTICATO		3X36	MAPEI # 01 ALABASTER	ACCENT WALL KITCHEN / DINING	CREATIVE MATERIALS CORP. - ARCTIC ANTICATO

FINISH LEGEND A

FINISH TAGS ARE NOT SEQUENTIAL

PAINTING EXISTING METAL CEILING GRIDS AND HVAC GRILLS/DIFFUSERS

APPLICATOR MUST DO THEIR DUE DILIGENCE WITH PREPARATION
PRIMER: 1 COAT OR SPOT PRIME OF B66W310, PRO INDUSTRIAL PRO-CRYL UNIVERSAL PRIMER.
FINISH: 2 COATS SW A82-100 SERIES, A-100 EXTERIOR LATEX SATIN

PAINT SPECIFICATIONS F

1. LAMINATE MAY BE SHIPPED FLAT OR ROLLED IN A BOX. FOR LONG TERM STORAGE, WILSONART RE-COVER LAMINATE SHOULD BE STORED FLAT (HORIZONTALLY) WITH THE ADHESIVE SIDE FACING DOWN (DECORATIVE SIDE UP).
2. CONDITION BOTH THE LAMINATE AND THE SUBSTRATE IN THE SAME ENVIRONMENT FOR 48 HOURS BEFORE FABRICATION. IF ROLLED, UNROLL THE LAMINATE FOR THE 48 HOUR ACCLIMATION PERIOD. RECOMMENDED CONDITIONING AND ACCLIMATION IS 75°F AND 50% RELATIVE HUMIDITY. **DO NOT APPLY RE-COVER LAMINATE IF THE SURFACE TEMPERATURE OF THE LAMINATE OR THE SUBSTRATE IS BELOW 50°F.**
3. IF BONDING OVER AN EXISTING SUBSTRATE THAT IS DAMAGED, REPAIR THE SURFACE TO PREVENT AN UNEVEN APPEARANCE OF THE FINISHED ASSEMBLY. RECOMMENDED PRODUCTS FOR REPAIRING DAMAGED HIGH PRESSURE DECORATIVE LAMINATE OR WOOD SUBSTRATE: J-B WELD® WOODWELD, ELMER'S®CARPENTER'S® WOOD FILLER, AND BONDO® ALL-PURPOSE PUTTY. BE SURE TO READ AND FOLLOW THE MANUFACTURER'S PRECAUTIONS AND DIRECTIONS FOR USE. SAND AND CLEAN ALL REPAIRED AREAS BEFORE APPLYING THE LAMINATE.
4. SUBSTRATES SHOULD BE CLEAN AND FREE OF RESIDUE. IF BONDING TO AN EXISTING DECORATIVE SURFACE, MAKE SURE IT IS ADEQUATELY CLEANED AND DRIED BEFORE BONDING. SUITABLE CLEANING PRODUCTS INCLUDE: WILSONART® 110, WILSONART® 121, WILSONART® 130, WILSONART® 131, WILSONART® 131A, ACETONE, ISOPROPYL ALCOHOL, OR WINDEX® WITH AMMONIA. DO NOT USE A CLEANER THAT WILL LEAVE AN OILY RESIDUE. BE SURE TO READ AND FOLLOW THE MANUFACTURER 'S PRECAUTIONS AND DIRECTIONS FOR USE.
5. TO PRECUT LAMINATE PRIOR TO BONDING, USE CARBIDE TIPPED SAW BLADES, ROUTER BITS AND LAMINATE SLITTERS. CUTTING BLADES AND ROUTER BITS SHOULD BE KEPT SHARP AND CLEAN.
6. WHEN USING MULTIPLE SHEETS OF LAMINATE TO COVER AN AREA, LEAVE A GAP BETWEEN SHEETS TO ALLOW FOR PROPER LAMINATE MOVEMENT. A MINIMUM GAP OF 1/16 " IS REQUIRED BETWEEN SHEETS OF RE-COVER LAMINATE USED IN NON-ENVIRONMENTALLY CONTROLLED AREAS. A MINIMUM GAP OF 1/32 REQUIRED BETWEEN SHEETS OF RE-COVER LAMINATE IN ENVIRONMENTALLY CONTROLLED AREAS.
7. PRIOR TO INSTALLATION, AND BEFORE REMOVING THE PEEL SHEET THAT COVERS THE ADHESIVE, DRY FIT THE RE-COVER LAMINATE TO THE SUBSTRATE. ONCE YOU HAVE INDEXED THE LAMINATE, REMOVE 1 SHEET ON ONE END AND LIGHTLY TACK IT IN PLACE. BEGIN REMOVING THE PEEL SHEET, MAKING SURE THE OPPOSITE END IS STILL PROPERLY ALIGNED. WORK YOUR WAY DOWN THE ENTIRE LENGTH OF THE LAMINATE SHEET UNTIL THE PEEL SHEET IS COMPLETELY REMOVED AND THE RE-COVER LAMINATE IS FLAT ON THE SURFACE. APPLY UNIFORM BONDING PRESSURE (30-40 PSI MINIMUM) OVER THE ENTIRE BONDED SURFACE USING A MECHANICAL PINCH ROLLER (RECOMMENDED) OR A 3 " WIDE J-ROLLER. DO NOT USE A WOODEN BLOCK OR OTHER HAND ROLLER.
8. **RE-COVER LAMINATE IS NOT REPOSITIONABLE. ANY ATTEMPTS TO REPOSITION THE LAMINATE WILL RESULT IN INADEQUATE BONDING.** IF THE RE-COVER LAMINATE HAS BEEN POSITIONED INCORRECTLY, REMOVE USING A HEAT GUN TO SOFTEN THE ADHESIVE, AND THEN PULL THE LAMINATE AWAY FROM THE SUBSTRATE. **SHEET IS REMOVED, IT CANNOT BE REAPPLIED.** REPLACE IT WITH A NEW SHEET OF RE-COVER LAMINATE.
9. ONCE BONDED, YOU CAN BEGIN MACHINING THE RE-COVER ASSEMBLY IMMEDIATELY. HIGH TOOL SPEED AND LOW FEED SPEED ARE RECOMMENDED FOR BEST RESULTS. PRIOR TO ROUTING EDGES, A RAZOR MAY BE USED TO SCORE THE ADHESIVE SIDE OF THE LAMINATE TO PREVENT THE ADHESIVE LAYER FROM ROLLING UP DURING THE PROCESS.
10. TO AVOID STRESS CRACKING, DO NOT USE SQUARE-CUT INSIDE CORNERS. ALL INSIDE CORNERS SHOULD HAVE A MINIMUM OF 1/8" RADIUS. DRILL OVERSIZED HOLES FOR SCREWS OR BOLTS. SCREWS OR BOLTS SHOULD BE SLIGHTLY COUNTERSUNK INTO THE FACE SIDE OF A LAMINATE CLAD SUBSTRATE.

WILSON RE-COVER LAMINATE INSTALATTION INSTRUCTIONS E

ROOM FINISH SCHEDULE

QW	Floor Finish	Base Finish	Wall Finish	Accent Wall	CEILING	LAMINATES: DOOR LAMINATE	LAMINATES: POS COUNTERTOP	LAMINATES: POS COUNTER FACE	Comments
ALL GENDER RESTROOMS	T-5	MT-1	T-3	T-2	P-2	L-4	N/A	N/A	
DINING	T-5	B-2, MT-3	P-2, MT-4, CR-1, WC-1	T-4	CL-2, P-2	N/A	SS-1	L-11, MT-5	
BOH	N/A	N/A	N/A	N/A	N/A	N/A	N/A	N/A	EXISTING

ROOM SCHEDULE B

1. INSTALL FRP ON KITCHEN SIDE OF SERVING COUNTER WALL
2. GALV. STEEL WALL AND CEILING FINISHES BY WIX/WIF BOX MFR.
3. REFER TO INTERIOR ELEVATIONS FOR LOCATIONS OF TILE AND FRP
4. FOR FINISH LOCATIONS REFER TO:
   a. SHEETS A4.0 & A4.1 EXTERIOR ELEVATIONS
   b. SHEET A7.0 FLOOR FINISH PLAN
   c. SHEET A7.1 REFLECTED CEILING PLAN
   d. SHEET A6.0 TO A8.1 INTERIOR ELEVATIONS
5. APPROVED PAINT MANUFACTURERS:
   PORTER, BENJAMIN MOORE, SHERWIN WILLIAMS, ICI, & PITTSBURGH PAINTS
   MATCH SPECIFIED SCHEDULE COLORS EXACTLY
6. ALL PAINTED GYPSUM BOARD SHALL HAVE A LIGHT ORANGE PEEL TEXTURE
7. ALL MORTAR SHALL BE MIXED WITH WHITE SAND TO INSURE A COLOR CONSISTENT TO THE ORIGINAL INTENT

GENERAL NOTES D

EUROWEST DECORATIVE SURFACES
JAN DETER
NATIONAL ACCOUNT MANAGER
DESIGN/ ARCH. CONSULTANT
(714)-309-9551
JDETER@EUROWEST.COM
WWW.EUROWEST.COM

CREATIVE MATERIALS CORP.
CRAIG LANSLEY
PH: 518.713.5372
CLANSLEY@CREATIVEMATERIALSCORP.COM
PH: 800-207-2967 (2355)
TACOBELLTILE@CREATIVEMATERIALS.COM

MARLITE
MIKE FREW
(330)260-7623
MFREW@MARLITE.COM
WWW.MARLITE.COM

WOLF GORDON
JESSICA ROSE
(213)999-1141
JESSICA.ROSE@WOLFGORDON.COM

EVERBRITE
ANTHONY NOTO
ANOTO@EVERBRITE.COM

AGI
RANDY KERR
RKERR@AGISIGN.COM

CUMMINGS
ANN BAKER
(800)489-7446 EXT. 10001
DIRECT: (615)872-0068
CELL: (615)812-2204

WILSONART INTERNATIONAL, INC.,
ALLYSON MAZZARINI
SPECIFICATION REPRESENTATIVE
(562)781 - 4059
MAZZARA@WILSONART.COM

SHERWIN WILLIAMS
BRAD HARRINGTON
(216)341-5553 EXT 115
CELL: (216)-210-2723

CEILUME
DAVID CONDELLO
DAVID@CEILUME.COM
1-(877)492-5605

IDX
DENNIS CARUANA
SENIOR PROJECT MANAGER
DIRECT: (909)212 - 8375
CELL: (909)217 - 6674
DENNIS.CARUANA@IDXLOSANGELES.COM

FINISH CONTACTS C

VMI architecture
Design · Planning · Interiors
637 5th Avenue San Rafael, CA 94901
415-451-2500 415-451-2695 fax
www.vmiarchitecture.com

VMI JOB NUMBER
1856

LICENSED ARCHITECT
HUGH EDWARD MURPHY
No. C17928
REN. 10/31/19
STATE OF CALIFORNIA

CITY OF SAN JOSE
BUILDING DIVISION
B.P. #
DATE

RECORD DATES
DD SUBMITTAL -
BLDG. SUBMITTAL -
BID SET -
CONTRACT SET -

REVISIONS

CLIENT
Tambro Inc.
2780 Alum Rock Ave.
San Jose, CA 95127
STORE #024525

TACO BELL REMODEL
2770 Alum Rock Ave
San Josel, CA 95127
APN#: 484-20-037-2

TACO BELL
MOD EXPL
MID TERM

FINISH SCHEDULES
A7-2

W:\Data\Tambro\1856_Tambro_SanJose_AlumRock_024525\03_cd_current\A72_1856_A7.2.dwg By: ARCHASSOCIATE01 Saved on:4/5/2019 11:03:04 AM
ALL IDEAS, DESIGNS, ARRANGEMENTS AND PLANS INDICATED BY THIS DRAWING ARE OWNED BY, AND THE PROPERTY OF THIS OFFICE AND WERE CREATED, EVOLVED AND DEVELOPED FOR USE ON, AND IN CONNECTION WITH, THE SPECIFIED PROJECT. NONE OF SUCH IDEAS, DESIGNS, ARRANGEMENTS OR PLANS SHALL BE USED BY OR DISCLOSED TO ANY PERSON, FIRM OR CORPORATION FOR ANY PURPOSE WHATSOEVER WITHOUT THE WRITTEN PERMISSION OF PROJECT ARCHITECT.
WRITTEN DIMENSIONS ON THESE DRAWINGS SHALL HAVE PRECEDENCE OVER SCALE DIMENSIONS. CONTRACTORS SHALL VERIFY AND BE RESPONSIBLE FOR, ALL DIMENSIONS AND CONDITIONS ON THE JOB AND THIS OFFICE MUST BE NOTIFIED OF ANY VARIATION FROM THE DIMENSIONS AND CONDITIONS SHOWN BY THESE DRAWINGS. SHOP DETAILS OF ADEQUATE SCALE MUST BE SUBMITTED TO THIS OFFICE FOR APPROVAL BEFORE PROCEEDING WITH FABRICATION ON ITEMS SO NOTED.

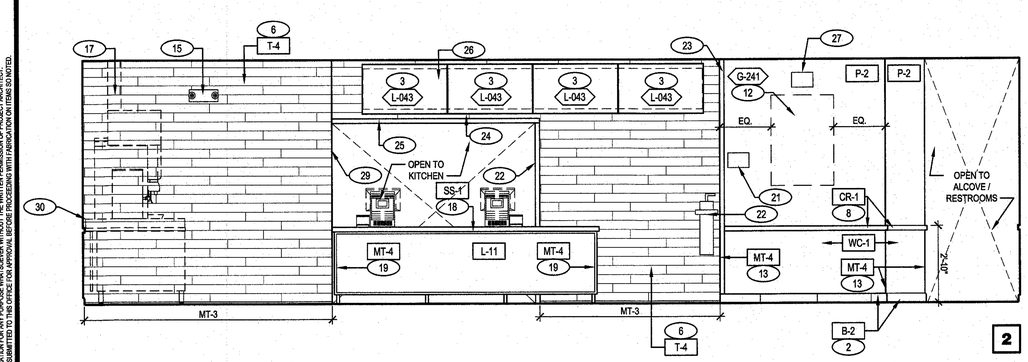

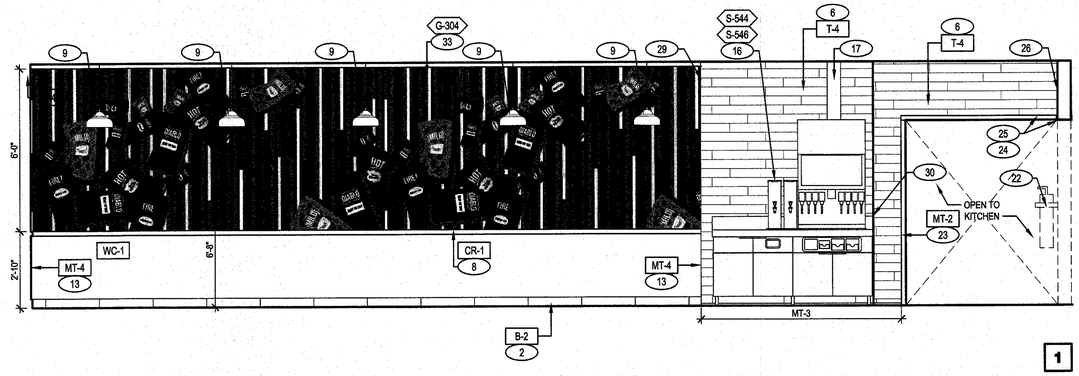

DINING 3/8" = 1'-0" **B**

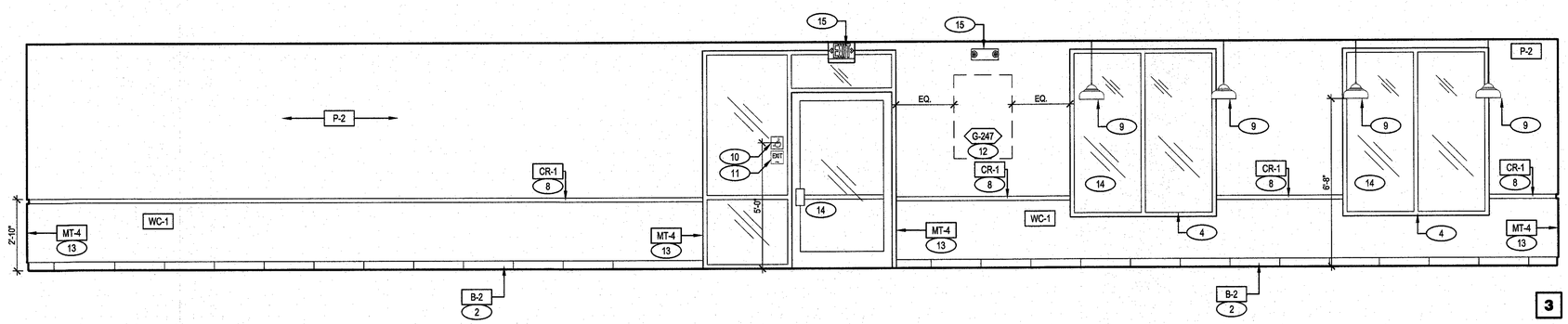

DINING ROOM **C**

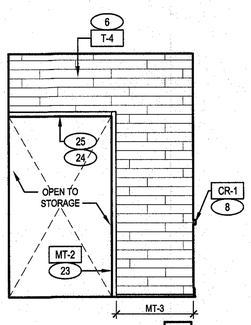

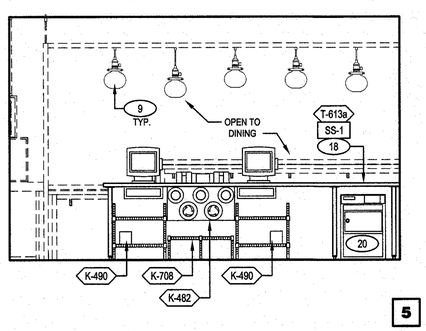

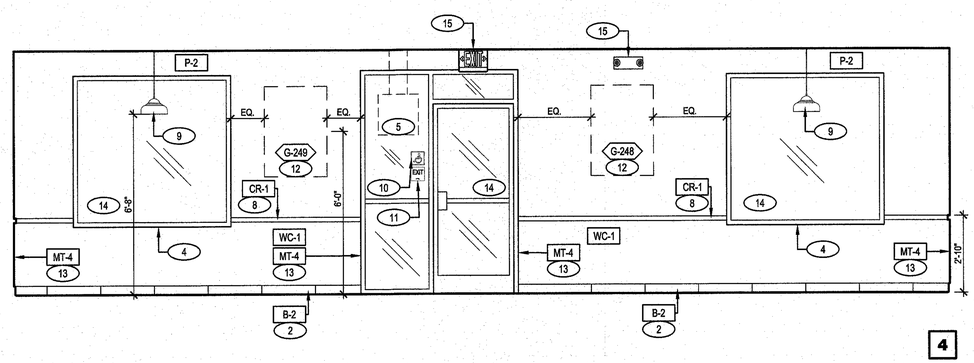

SERVICE **DINING ROOM** **D**

(#) KEYNOTE SYMBOL

1. INSTALL 1/2" NEUTRAL GREY SCHULTER WALL TRIM AT TILE EDGE.
2. (N) TILE BASE.
3. INSTALL NEW DIGITAL MENU BOARD.
4. (N) WINDOW SILL.
5. (N) "DRIVE THRU OPEN LATE" SIGN. INSTALL ON STREET SIDE. BY SIGNAGE VENDOR.
6. INSTALL WALL TILE ON ALL SIDES OF SELF SERVE DRINK AREA AND SERVICE AREA.
7. NOT USED.
8. (N) CHAIR RAIL. SEE DETAIL 4/A6-0
9. (N) PENDANT LIGHT FIXTURE.
10. (N) ACCESSIBLE SIGNAGE. PER 7 / ADA-1.
11. PROVIDE TACTILE EXIT SIGN AT EGRESS DOOR PER "TACTILE SIGN" DETAIL ON ADA1-1 IF NO SIGN IS PRESENT.
12. NEW FRAMED ART WORK. ARTWORK SHALL BE PARALLEL WITH CHAIR RAIL. CENTER OF WALL. SEE SHEET A2-0.
13. METAL TRIM AT OUTER CORNERS OF WAINSCOT.
14. WINDOWS AND FRONT DOORS TO REMAIN.
15. (E) ILLUMINATED EXIT SIGNS AND EMERGENCY LIGHTS TO REMAIN.
16. (E) SELF SERVE DRINK TABLE ADJUST DRINK DISPENSER TO ALLOW SPACE FOR TEA URN. SEE SHEET A2-0.
17. PROVIDE STAINLESS SHROUD TO COVER REFRIGERATION LINES ABOVE SELF SERVE DRINK.
18. NEW POS COUNTER. REFER TO SHEET A2-0.
19. DECORATIVE METAL BLACK TRIM AT EXPOSED EDGES AND OUTSIDE CORNERS OF POS COUNTER.
20. (E) SAFE BRINKS TO BE REINSTALLED.
21. INSTALL "ASK IF YOU NEED ASSISTANCE" SIGN.
22. (E) FIRE EXTINGUISHER.
23. 2"X2 SS CORNER/ END WALL CHANNEL GUARD, FULL HEIGHT.
24. (N) SQUARED OFF MENU BOARD BULKHEAD.
25. INSTALL STAINLESS STEEL WRAP TO FINISH UNDERSIDE OF MENU BOARD BULKHEAD.
26. 1/2 PLYWOOD BACKING (150"X18") TO BE INSTALLED BEHIND THE DRYWALL/FINISHED WALL SURFACE FOR DIGITAL MENU BOARDS.
27. (N) MAXIMUM OCCUPANCY SIGN.
28. (E) BAG IN BOX SYRUP TO REMAIN. SEE A8-1.
29. TERMINATE WALL TILE WITH BULLNOSE.
30. PROVIDE CLEAR SILICONE CAULK WHERE ALL FIXED AND BUILT IN COUNTERS/EQUIPMENT ABUT WALL SURFACES. WHERE GAP BETWEEN WALL AND COUNTER SPLASH/EQUIPMENT EXCEEDS 1/4".
31. (N) STAINLESS STEEL SURROUND AT MOP SINK. SEE A8-1
32. (N) TANKLESS WATER HEATER. G.C., REFER TO DWG A2-0. SEE A8-1.
33. (N) WALL GRAPHIC ART WORK. ARTWORK SHALL BE PARALLEL TO CHAIR RAIL. SEE SHEET A2-0 MURAL/ WALL COVERING LOCATION. 1X2 TRIM ON EDGES OF MURAL STAINED SAME SHADE AS CHAIR RAIL.
34. RELOCATE CO2 TANK TO THIS NEW LOCATION. SEE A8-1.

KEY NOTES **A**

VMI architecture
Design · Planning · Interiors
637 5th Avenue San Rafael, CA 94901
415-451-2500 415-451-2595 fax
www.vmiarchitecture.com

VMI JOB NUMBER
1856

LICENSED ARCHITECT
HUGH EDWARD MURPHY
No. C17928
REN. 10/31/19
STATE OF CALIFORNIA

CITY OF SAN JOSE
BUILDING DIVISION
B.P. #
DATE

RECORD DATES
DD SUBMITTAL -
BLDG. SUBMITTAL -
BID SET -
CONTRACT SET -

REVISIONS

CLIENT
Tambro Inc.
2780 Alum Rock Ave.
San Jose, CA 95127
STORE #024525

TACO BELL REMODEL
2770 Alum Rock Ave
San Josel, CA 95127
APN#: 484-20-037-2

TACO BELL
MOD EXPL
MID TERM

INTERIOR ELEVATIONS
DINING ROOM

A8-0

W:\Data\Tambro\1856_Tambro_SanJose_AlumRock_024525\03_cd_current\480_1856_A8-0.dwg By: ARCHASSOCIATE01 Saved on:6/14/2019 3:30:45 PM
ALL IDEAS, DESIGNS, ARRANGEMENTS OR PLANS INDICATED OR REPRESENTED BY THIS DOCUMENT, WRITTEN OR PRINTED, ARE THE EXCLUSIVE PROPERTY OF VMI ARCHITECTURE. NONE OF SUCH IDEAS, DESIGNS, ARRANGEMENTS OR PLANS SHALL BE USED BY OR DISCLOSED TO ANY PERSON, FIRM OR CORPORATION FOR ANY PURPOSE WHATSOEVER WITHOUT THE WRITTEN PERMISSION OF PROJECT ARCHITECT.
ALL DIMENSIONS, CONDITIONS, DRAWINGS AND SPECIFICATIONS SHALL MAKE PRECEDENCE OVER SCALE DIMENSIONS. CONTRACTORS SHALL VERIFY AND BE RESPONSIBLE FOR ALL DIMENSIONS AND CONDITIONS ON THE JOB AND THIS OFFICE MUST BE NOTIFIED OF ANY VARIATION FROM THE DIMENSIONS AND CONDITIONS SHOWN BY THESE DRAWINGS. SHOP DETAILS OF ADEQUATE SCALE MUST BE SUBMITTED TO THIS OFFICE FOR APPROVAL BEFORE PROCEEDING WITH FABRICATION ON ITEMS SO NOTED.

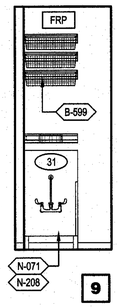

9

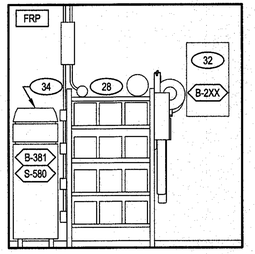

8

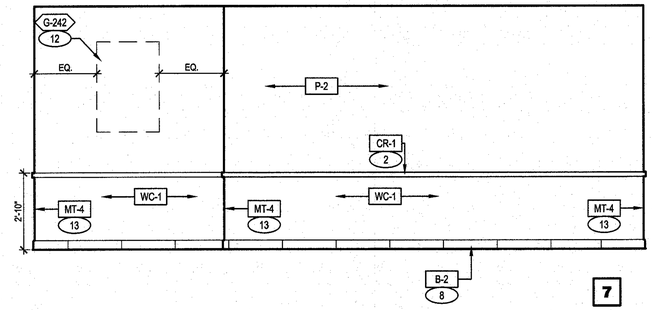

7

KITCHEN | B

ALCOVE | A

NOT USED | C

NOT USED | D

VMI architecture
Design · Planning · Interiors
637 5th Avenue San Rafael, CA 94901
415-451-2500 415-451-2595 fax
www.vmiarchitecture.com

VMI JOB NUMBER
1856

LICENSED ARCHITECT
HUGH EDWARD MURPHY
No. C17928
REN. 10/31/19
STATE OF CALIFORNIA

CITY OF SAN JOSE
BUILDING DIVISION
B.P. #
DATE

RECORD DATES
DD SUBMITTAL -
BLDG. SUBMITTAL -
BID SET -
CONTRACT SET -

REVISIONS

CLIENT
Tambro Inc.
2780 Alum Rock Ave.
San Jose, CA 95127
STORE #024525

TACO BELL REMODEL
2770 Alum Rock Ave
San Josel, CA 95127
APN#: 484-20-037-2

TACO BELL
MOD EXPL
MID TERM

INTERIOR ELEVATIONS
DINING ROOM

A8-1

W:\Data\Tambro\1856_Tambro_SanJose_AlumRock_024525\03_cd_current\480_1856_A8-1.dwg By: ARCHASSOCIATE01 Saved on:6/14/2019 3:23:54 PM

ALL IDEAS, DESIGNS, ARRANGEMENTS AND PLANS INDICATED BY THIS DRAWING ARE OWNED BY, AND THE PROPERTY OF THIS OFFICE AND WERE CREATED, EVOLVED AND DEVELOPED FOR USE ON, AND IN CONNECTION WITH, THE SPECIFIED PROJECT. NONE OF SUCH IDEAS, DESIGNS, ARRANGEMENTS OR PLANS SHALL BE USED BY OR DISCLOSED TO ANY PERSON, FIRM OR CORPORATION FOR ANY PURPOSE WHATSOEVER WITHOUT THE WRITTEN PERMISSION OF PROJECT ARCHITECT.
WRITTEN DIMENSIONS ON THESE DRAWINGS SHALL HAVE PRECEDENCE OVER SCALE DIMENSIONS. CONTRACTORS SHALL VERIFY AND BE RESPONSIBLE FOR, ALL DIMENSIONS AND CONDITIONS ON THE JOB AND THIS OFFICE MUST BE NOTIFIED OF ANY VARIATION FROM THE DIMENSIONS AND CONDITIONS SHOWN BY THESE DRAWINGS. SHOP DETAILS OF ADEQUATE SCALE MUST BE SUBMITTED TO THIS OFFICE FOR APPROVAL BEFORE PROCEEDING WITH FABRICATION ON ITEMS SO NOTED.

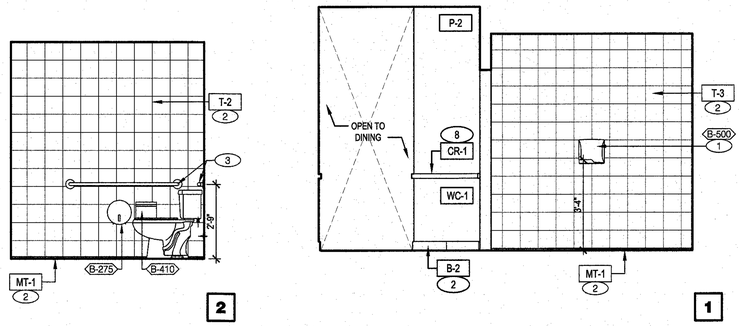

***NOTE:
COORDINATE THE LOCATION AND MOUNTING HEIGHTS FOR ALL FIXTURES, GRAB BARS AND ACCESSORIES WITH SHEET ADA-3 TO ENSURE COMPLIANCE WITH ADA / LOCAL JURISDICTION MINIMUM ACCESSIBLE REQUIREMENTS.

RESTROOM ALL GENDER 1 3/8" = 1'-0" F

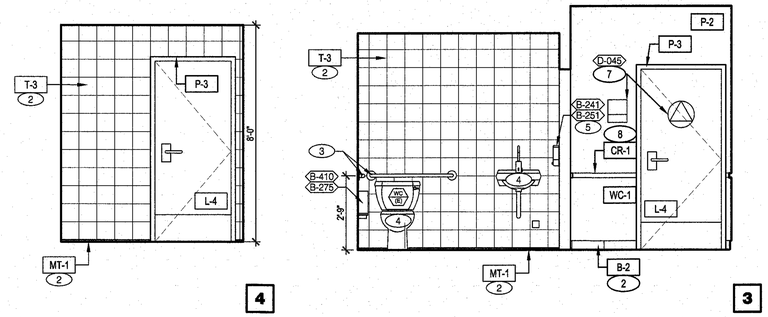

***NOTE:
COORDINATE THE LOCATION AND MOUNTING HEIGHTS FOR ALL FIXTURES, GRAB BARS AND ACCESSORIES WITH SHEET ADA-3 TO ENSURE COMPLIANCE WITH ADA / LOCAL JURISDICTION MINIMUM ACCESSIBLE REQUIREMENTS.

RESTROOM ALL GENDER 1 3/8" = 1'-0" F

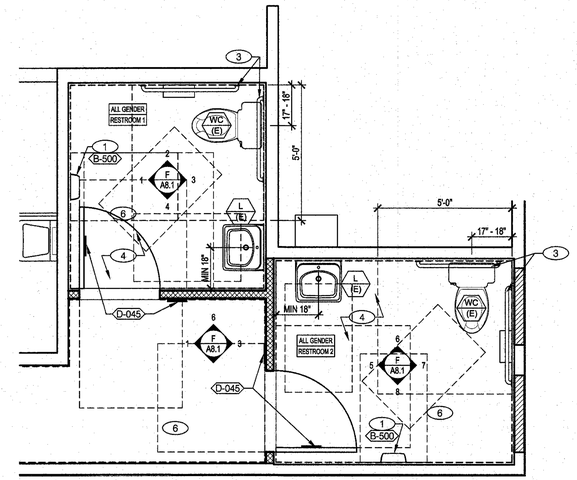

NOTE: REFER TO SHEET ADA-3 FOR ACCESSIBLE DIMENSIONS & DETAILS

REF. NORTH

ENLARGED RESTROOM PLAN 3/8" = 1'-0" A

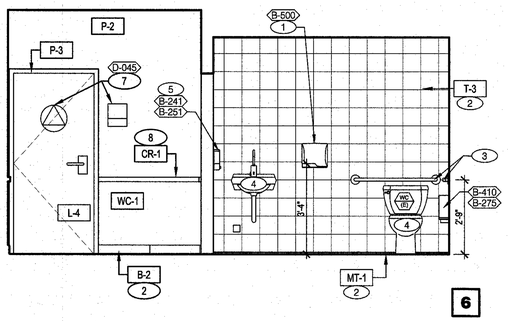

***NOTE:
COORDINATE THE LOCATION AND MOUNTING HEIGHTS FOR ALL FIXTURES, GRAB BARS AND ACCESSORIES WITH SHEET ADA-3 TO ENSURE COMPLIANCE WITH ADA / LOCAL JURISDICTION MINIMUM ACCESSIBLE REQUIREMENTS.

RESTROOM ALL GENDER 2 3/8" = 1'-0" F

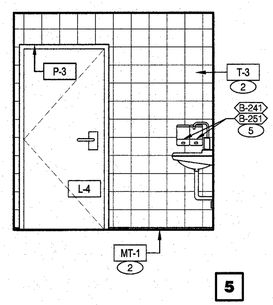

REFER TO DRAWING SHEETS ADA-1 TO ADA-3 FOR ACCESSORIES' INSTALLATION REQUIREMENTS RELATED TO DISABLED ACCESSIBILITY.

1. (E) ELECTRICAL HAND DRYERS. LOCATE HAND DRYER OPERABLE PARTS WITH THE TOP EDGE NOT MORE THAN 40" ABOVE FINISH FLOOR.
2. (N) WALL TILE AND BASE. SEE FINISH FLOOR PLAN A7.0.
3. REUSE (E) GRAB BARS.
4. ALL FIXTURES TO BE REMOVED AND RESET AFTER NEW TILE IS INSTALLED. CONTRACTOR TO CONFORM THAT THE (E) FIXTURES MEET CURRENT CalGREEN FLOW RATES BELOW.
5. SOAP / HAND SANITIZER DISPENSERS - BY ECOLAB.
6. ADA CLEARANCES.
7. (N) ADA RESTROOM ACCESSIBLE SIGNAGE. VERIFY LOCAL REQUIREMENTS. SEE DETAIL 1/ADA-3 AND ELEVATIONS A8-2.
8. (N) CHAIR RAIL.

KEY NOTES C

A. PROVIDE PROPER 2x BLOCKING AT WALL RECESSED MOUNTED ACCESSORIES.
B. GRAB BARS, FASTENERS AND MOUNTING DEVICES SHALL BE INSTALLED PER ADA REQUIREMENTS. REFER TO SHEET ADA1.0.
C. REFER TO FLOOR PLAN NOTES ON SHEET A1.0 FOR BLOCKING AND SUBSTRATE NOTES.
D. LOCATE FLUSH HANDLE ON WIDE SIDE OF STALL.
E. PROVIDE WALL TILE BEHIND ENTIRE MIRROR AREA TO ALIGN MOUNTING SURFACES.
F. REFER TO ACCESSIBILITY CODES FOR MOUNTING HEIGHTS AND CLEARANCES OF ACCESSORIES AND FIXTURES.
G. ALL DIMENSIONS THIS DRAWING ARE TO FINISH SURFACE.
H. PROVIDE 5/8" CEMENTITIOUS BOARD SUBSTRATE FULL HEIGHT BEHIND ALL NEW TILED WALLS.
I. ▭ PROVIDE 1/4" MAX GAP AT ALL TOILET PARTITION PANEL JOINTS.
J. ⬭ DENOTES FINISH MATERIAL. REFER TO SHEET A7.2 FOR FINISH SCHEDULE.
K. DENOTES NEW TOILET ROOM ACCESSORIES.

GENERAL NOTES B

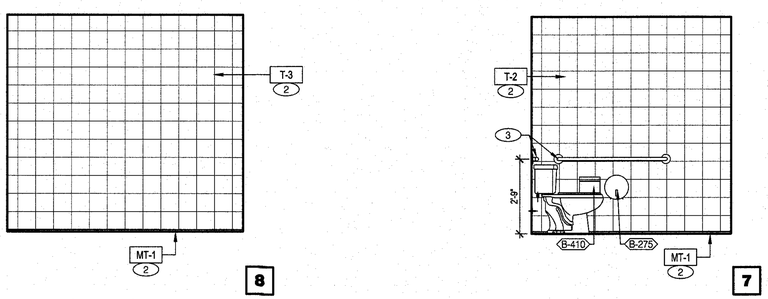

***NOTE:
COORDINATE THE LOCATION AND MOUNTING HEIGHTS FOR ALL FIXTURES, GRAB BARS AND ACCESSORIES WITH SHEET ADA-3 TO ENSURE COMPLIANCE WITH ADA / LOCAL JURISDICTION MINIMUM ACCESSIBLE REQUIREMENTS.

RESTROOM ALL GENDER 2 3/8" = 1'-0" F

# / # NO.	QTY.	MINIMUM EQUIPMENT REQUIRED	MFR. & MODEL NUMBER
B - CONTRACTOR BUILDING ELEMENTS			
B-241	2	SOAP DISPENSER (WALL MOUNT)	KAY 3741
B-251	2	SANITIZER DISPENSER (WALL MOUNT)	KAY 3741
B-275	2	TOILET PAPER DISPENSER	BOBRICK #B-2890
B-410	2	NAPKIN RECEPTACLE	RUBBERMAID #6140
B-500	2	ELECTRIC HAND DRYER. VERIFY WITH OPPS. 208V 7.8 AMP SINGLE PHASE	BOBRICK #B-7120 SURFACE MTD
WC (E)		WATER CLOSET (HC) EXISTING	1.1 GALLONS PER FLUSH
L (E)		LAVATORY EXISTING	METERING FAUCETS t 0.25 GALLONS PER CYCLE.

RESTROOM ACCESSORY SCHEDULE E

2016 CALIFORNIA PLUMBING CODE:
TABLE L 402.1 PLUMBING FIXTURE FLOW RATES:

FIXTURE TYPE	FLOW RATE	MAXIMUM FLOW RATE AT 20 PERCENT REDUCTION
SHOWERHEADS	2.0 GPM	1.6 GPM @ 80 PSI
LAVATORY FAUCETS	0.5 GPM @ 60PSI**	0.4 GPM @ 60 PSI
METERING FAUCETS	0.25 GALLONS/ CYCLE	0.2 GALLONS/ CYCLE
GRAVITY TANK TYPE WATER CLOSETS	1.28 GALLONS / FLUSH*	1.28 GALLONS / FLUSH
FLUSHOMETER VALVE WATER CLOSETS	1.6 GALLONS/ FLUSH	1.28 GALLONS / FLUSH
URINALS	0.5 GALLONS/ FLUSH	0.5 GALLONS/ FLUSH
KITCHEN FAUCETS	1.8 /60 PSI GPM***	WE ARE MEETING CALGREEN

*BASED ON CGBC 5.303.3.1
**BASED ON CGBC 5.303.3.4.1
***BASED ON CGBC 5.303.3.4.2

WATER FLOW RATE D

VMI architecture
Design · Planning · Interiors
637 5th Avenue San Rafael, CA 94901
415-451-2500 415-451-2595 fax
www.vmiarchitecture.com

VMI JOB NUMBER
1856

LICENSED ARCHITECT
HUGH EDWARD MURPHY
No. C17928
REN. 10/31/19
STATE OF CALIFORNIA

CITY OF SAN JOSE
BUILDING DIVISION
B.P. #
DATE

RECORD DATES
DD SUBMITTAL -
BLDG. SUBMITTAL -
BID SET -
CONTRACT SET -

REVISIONS

CLIENT
Tambro Inc.
2780 Alum Rock Ave.
San Jose, CA 95127
STORE #024525

TACO BELL REMODEL
2770 Alum Rock Ave
San Josel, CA 95127
APN#: 484-20-037-2

TACO BELL
MOD EXPL
MID TERM

INTERIOR ELEVATIONS
ENLARGED RESTROOM

A8-2

W:\Data\Tambro\1856_Tambro_SanJose_AlumRock_024525\03_cd_current\481_1856_A8-2.dwg By: ARCHASSOCIATE01 Saved on:6/14/2019 3:32:31 PM
ALL IDEAS, DESIGNS, ARRANGEMENTS AND PLANS INDICATED BY THIS DRAWING ARE OWNED BY, AND THE PROPERTY OF THIS OFFICE AND WERE CREATED, EVOLVED AND DEVELOPED FOR USE ON, AND IN CONNECTION WITH, THE SPECIFIED PROJECT. NONE OF SUCH IDEAS, DESIGNS, ARRANGEMENTS OR PLANS SHALL BE USED BY OR DISCLOSED TO ANY PERSON, FIRM OR CORPORATION FOR ANY PURPOSE WHATSOEVER WITHOUT THE WRITTEN PERMISSION OF PROJECT ARCHITECT.
WRITTEN DIMENSIONS ON THESE DRAWINGS SHALL HAVE PRECEDENCE OVER SCALE DIMENSIONS. CONTRACTORS SHALL VERIFY AND BE RESPONSIBLE FOR, ALL DIMENSIONS AND CONDITIONS ON THE JOB AND THIS OFFICE MUST BE NOTIFIED OF ANY VARIATION FROM THE DIMENSIONS AND CONDITIONS SHOWN BY THESE DRAWINGS. SHOP DETAILS OF ADEQUATE SCALE MUST BE SUBMITTED TO THIS OFFICE FOR APPROVAL BEFORE PROCEEDING WITH FABRICATION ON ITEMS SO NOTED.