Scope of Work

Remove and Replace Three Wall Signs

(A) 7' x 16.8' = 116.6 ⌀

(B) 6' x 35.8' = 214.8 ⌀

(C) 5' x 32.7' = 163.5 ⌀

Applicable Code

2016 Calif. Building Code

2016 Calif. Electrical Code

Type of Construction: III - 1hr

Occupancy: A2

3/14/19

AW

Chuck E. Cheese

2445 Fontaine Rd. San Jose, CA 95121

Sign A

Chuck E. Cheese

Sign A: 7' X 16.8' = 116.6 SQ FT
ALLOWED 190 SQ FT

Sign B & Sign C

Chuck E. Cheese

Sign B : 6' x 35.8' = 214.8 SQ FT
ALLOWED 224 SQ FT

Sign C : 5' x 32.7' = 163.5 SQ FT
ALLOWED 181 SQ FT

REQUIRED INSPECTIONS IN ADDITION TO BUILDING DIVISION INSPECTIONS

SPECIAL INSPECTION REQUIRED	(X) YES	( ) NO
STRUCTRUAL OBSERVATION	( ) YES	( ) NO
SOILS ENGINEER INSPECTION REQ'D	( ) YES	( ) NO
COMPACTION REPORT REQ'D	( ) YES	( ) NO
FLOOD ELEVATION CERT. REQ'D	( ) YES	( ) NO
PUBLIC WORKS INSPECTION REQ'D	( ) YES	( ) NO
FIRE DEPT INSPECTION REQ'D	( ) YES	( ) NO

COMMENTS Expansion Anchor

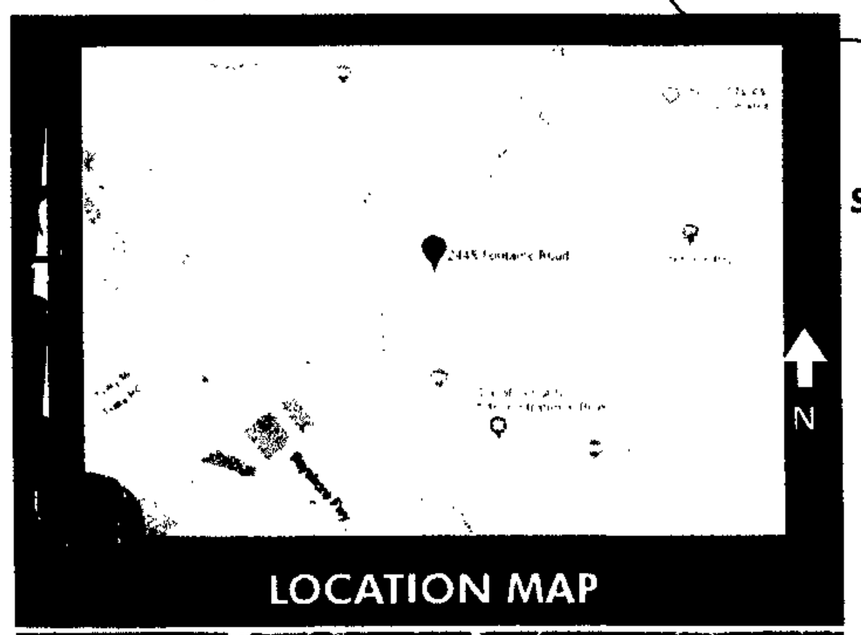

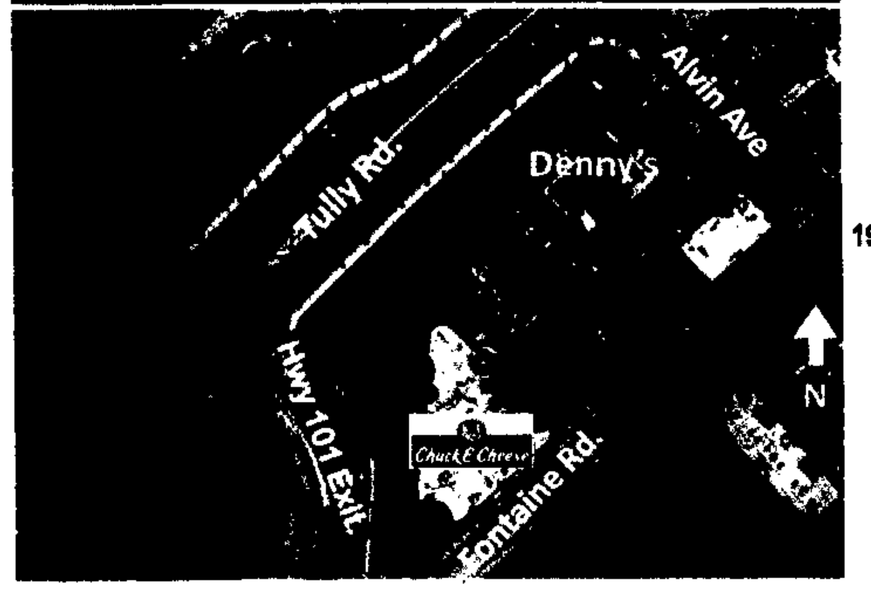

Building dimensions

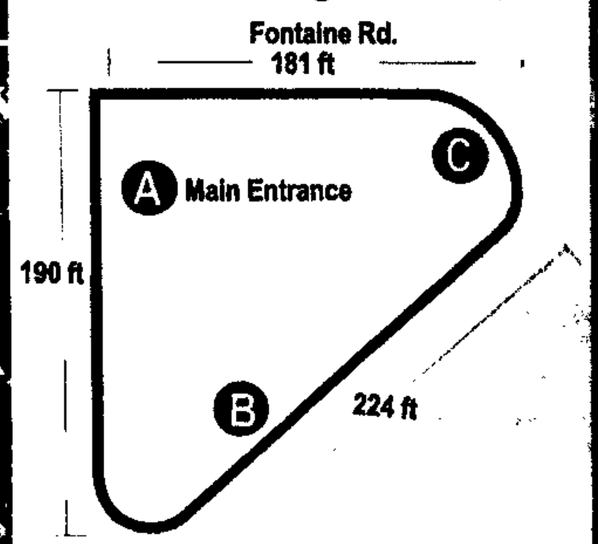

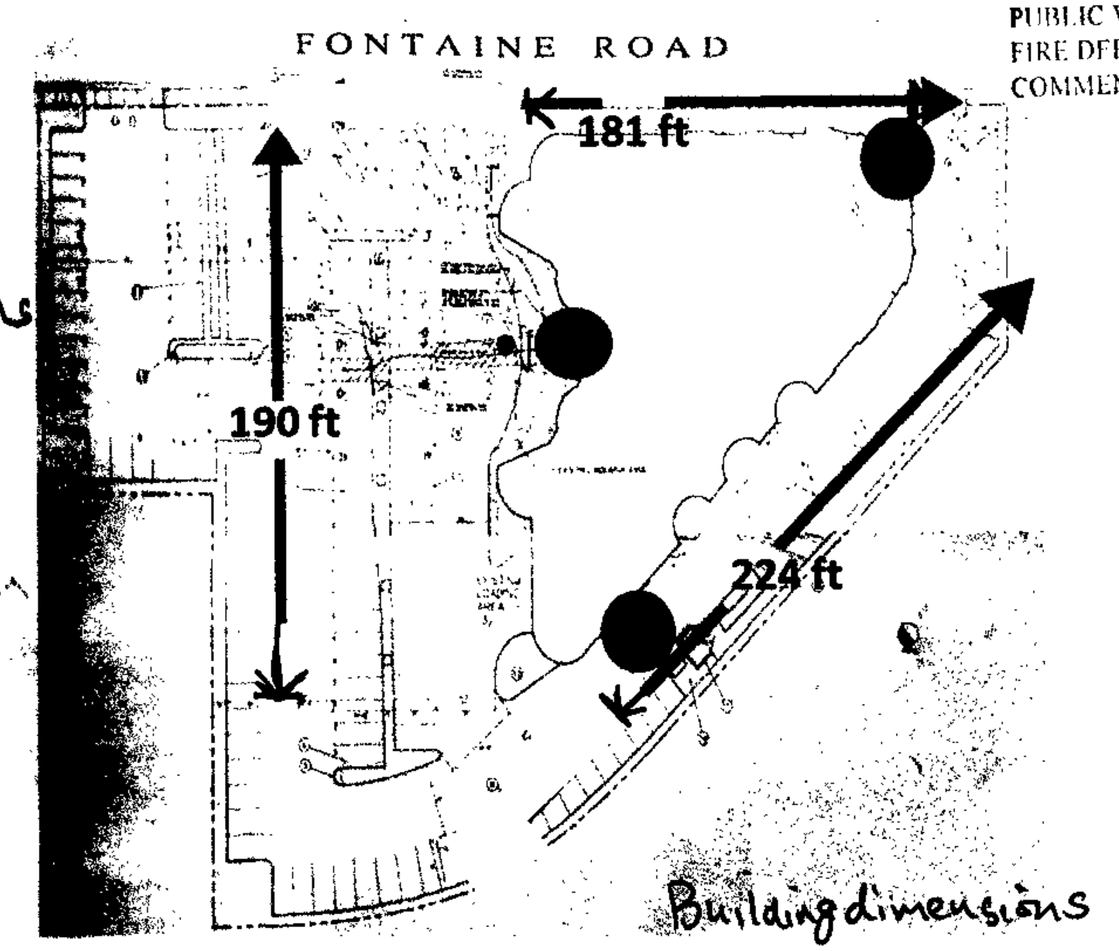

Building dimensions

Kieffer | Starlite
National Sign Manufacturers and Consultants
Dallas/Ft. Worth | Chicago | Sheboygan | Charlotte

For Contact Information visit us at www.kssigngroup.com

KS 18004 56

19-109655 (office)

CITY OF SAN JOSE
Department of Planning, Building & Code Enforcement
File No.: AD19-224
By: Justin D 3-9-19
DATE

See attached Development Permit Adjustment sheet for conditions of approval.
Note: A Building Permit may also be required. Please check with the Building Division.

Chuck E. Cheese 2445 Fontaine Rd. San Jose, CA 95121

Building Division
FOR REFERENCE ONLY
Not an approval
Plans shall be available for field inspector

Sign A

Chuck E. Cheese

Sign A: 7' X 16.8' = 116.6 SQ FT

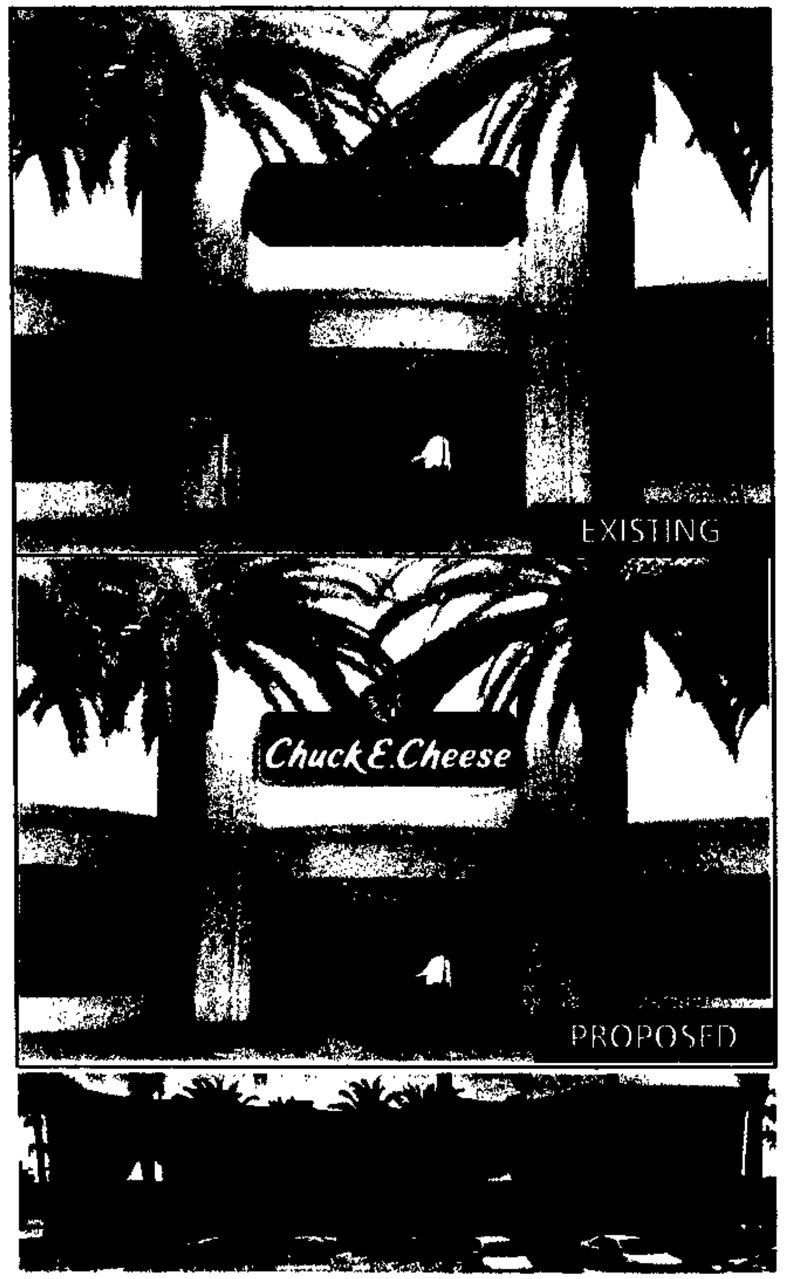

Chuck E. Cheese

Sign B : 6' x 35.8' = 214.8 SQ FT
ALLOWED 224 SQ FT

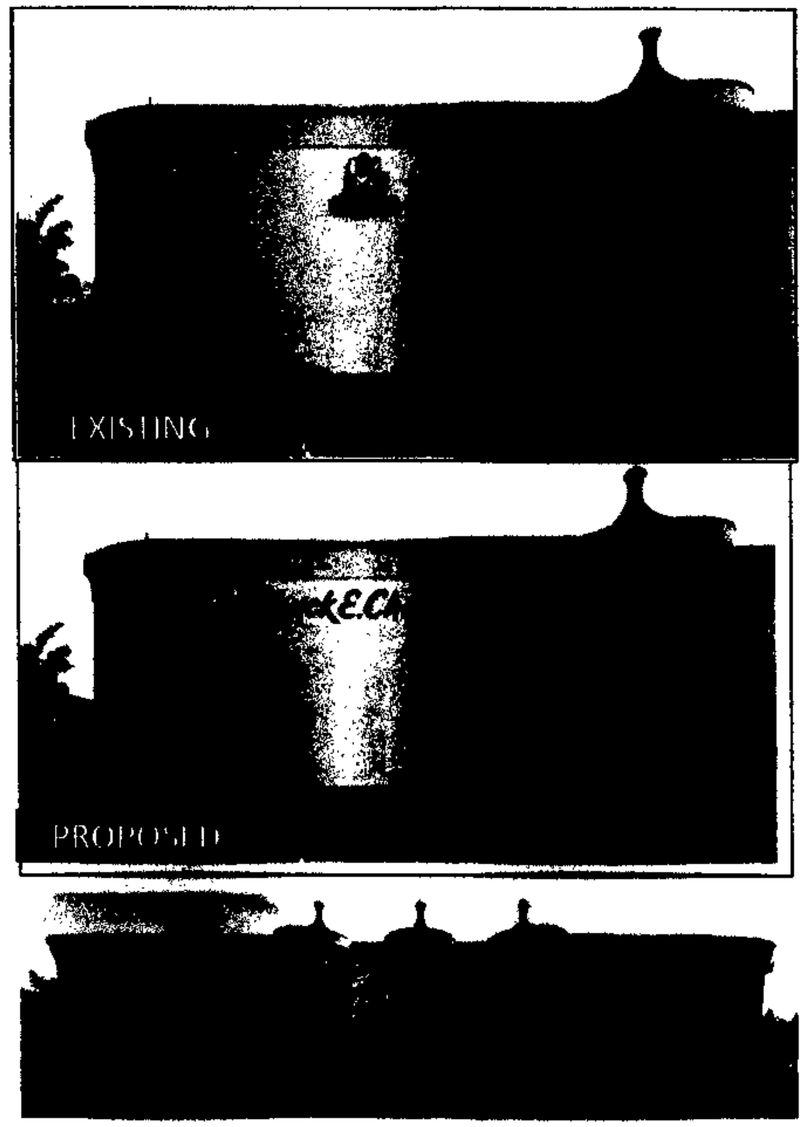

Chuck E. Cheese

Sign C : 5' X 32.75' =163.5 SQ FT
ALLOWED 181 SQ FT

CITY OF SAN JOSE
Department of Planning, Building & Code Enforcement
File No.: _____
By: _____ DATE
See attached Development Permit Adjustment sheet for conditions of approval.
Building Permit may also be required. Please contact Building Division.

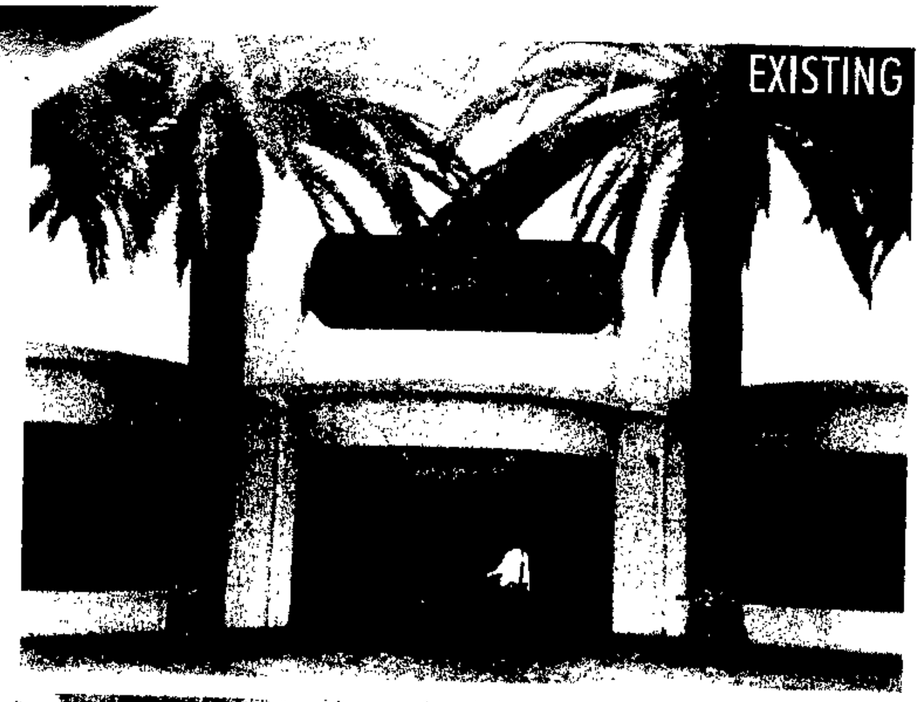

Building Division
FOR REFERENCE ONLY
Not an approval
Plans shall be available for field inspector

Sign A: 7' X 16.8' = 116.6SQFT

FRONT ELEVATION
N.T.S.

PMS 199C	
PMS WARM GRAY 8C	
PMS WARM GRAY 1C	
PMS 7520	
PMS 369	
PMS PROCESS BLACK	

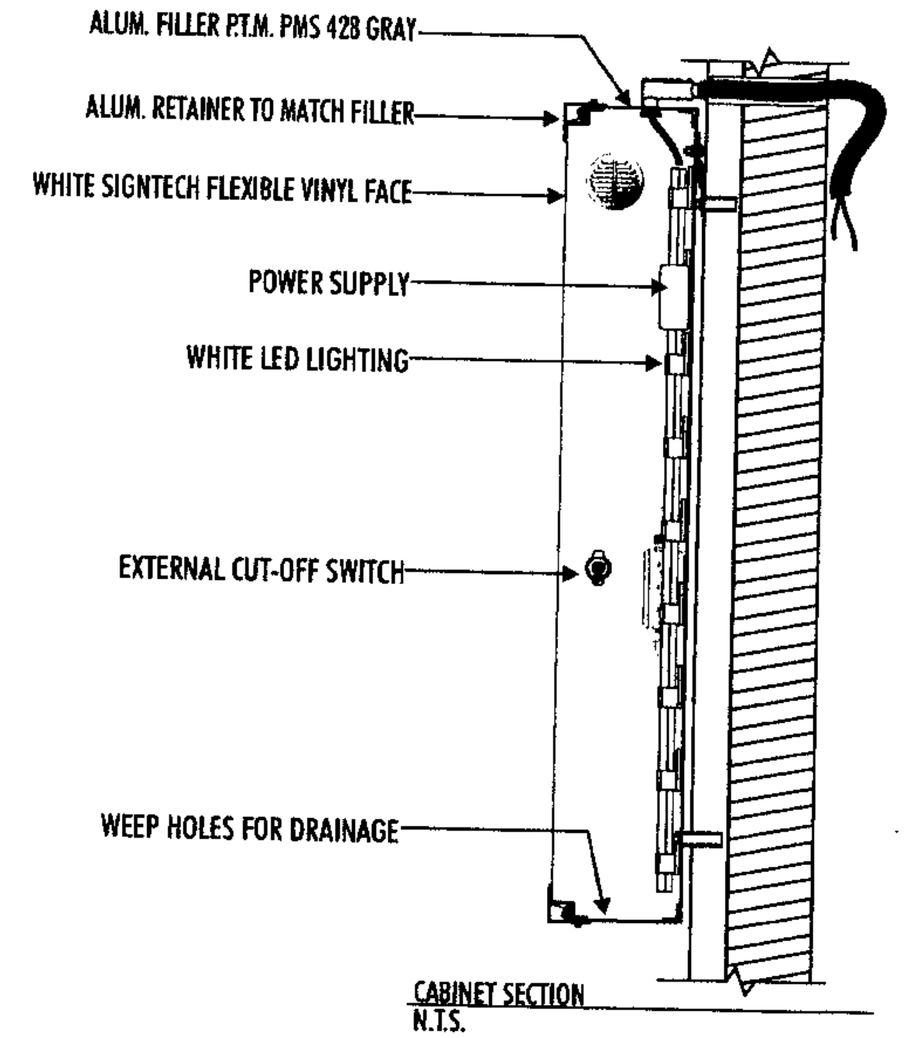

CABINET SECTION
N.T.S.

MOUNTING METHOD
SEE ATTACHED ENGINEERING

SOLID FILLED CMU WALL

PAGE 4 OF 10

PAGE 5 OF 10

CITY OF SAN JOSE
Department of Planning, Building & Code Enforcement
File No.:
By:
DATE
See attached Development Permit Adjustment sheet for conditions of approval.
Note: A Building Permit may also be required. Please [illegible] Division.

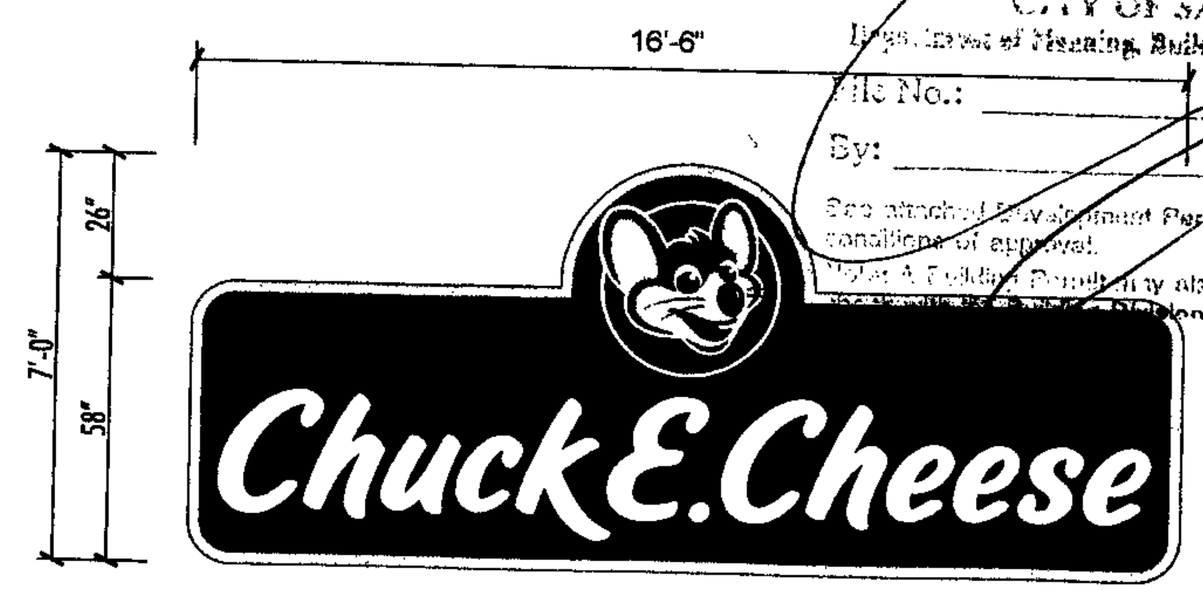

SINGLE-FACE CABINET
SCALE: ¼" = 1'-0"

7'-0" x 16'-8" = 116.6 SQ. FT. A

Kieffer | Starlite
National Sign Manufacturers and Consultants
Dallas/Ft. Worth | Chicago | Sheboygan | Charlotte

ACCOUNT: Chuck E. Cheese's
LOCATION: 2445 Fontain Rd.; San Jose, CA
ACCT. REP: Tessa Miller DESIGNER: G. Owens
DATE: 10-25-18
COMPANION FILES
C UL US LISTED

REVISIONS:	INITIALS & DATE:
A REVISED CABINET SHAPE	GO/11-16-18
B ADDED DETAILS	GO/02-12-19
C -	-
D -	-
E -	-
F -	-
G -	-
H -	-

This is an original unpublished drawing submitted for use in connection with a project being planned for you by Kieffer Holding Co. It is not to be reproduced, copied or exhibited in any fashion without the written permission of Kieffer Holding Company.

For Contact Information visit us at www.kssigngroup.com

KS1800456A

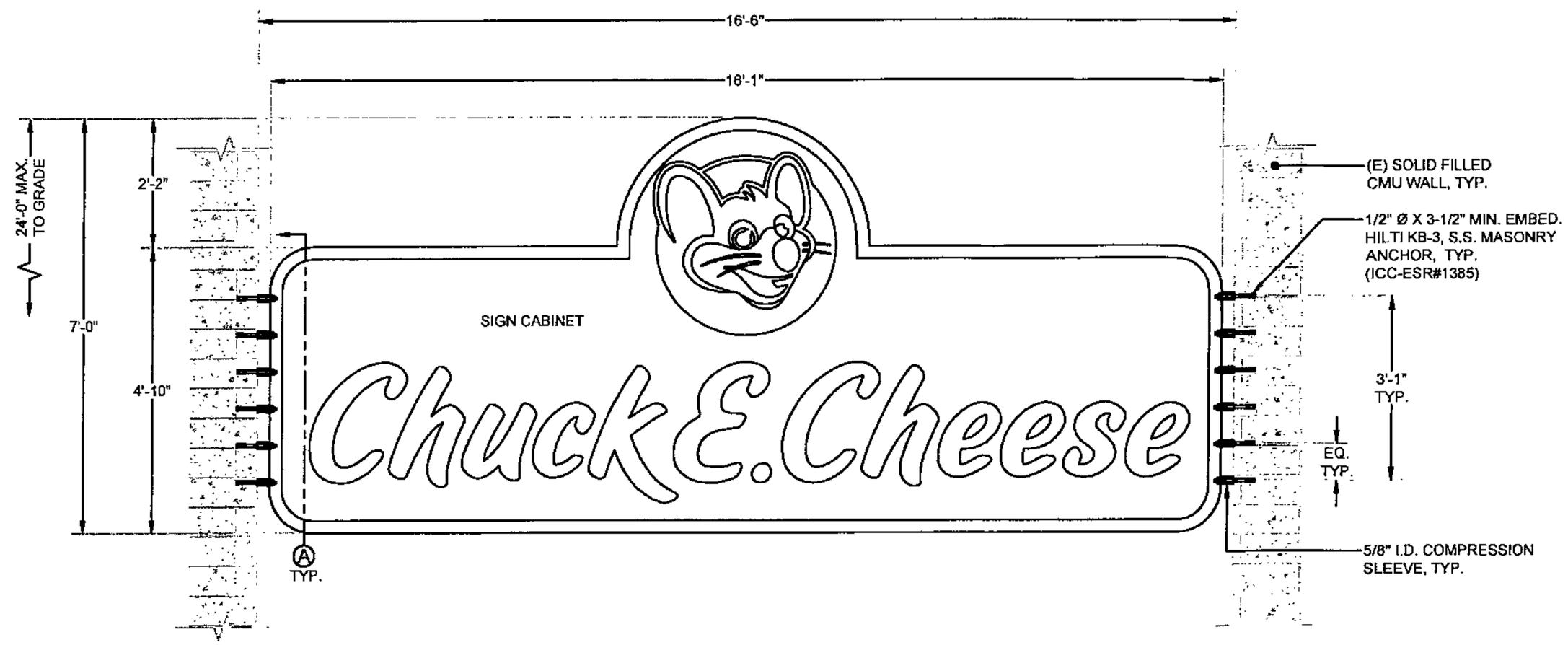

ELEVATION
N.T.S.

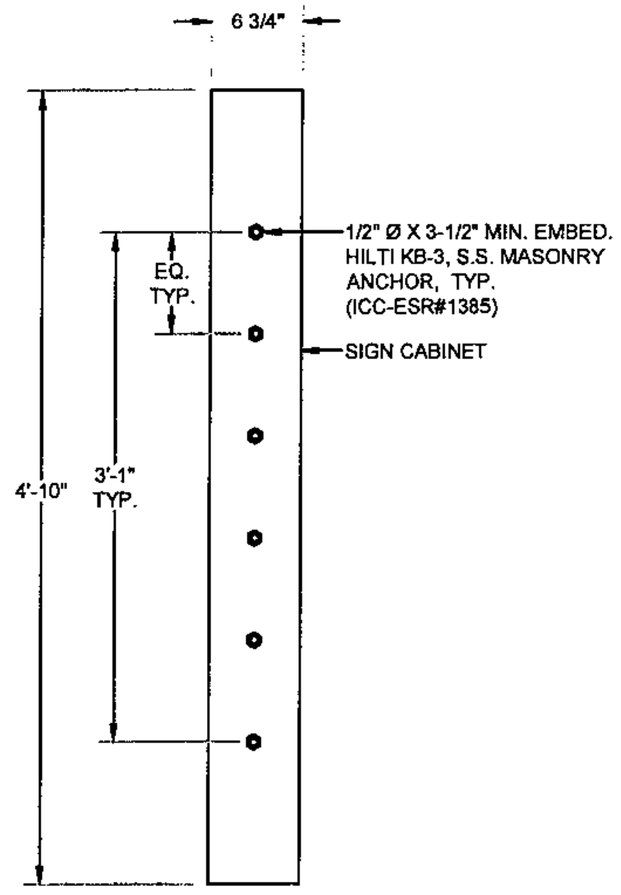

A SECTION VIEW
N.T.S.

Sign Design Based on 2016 CBC

Job #	JTS_43019
Project	Chuck E. Cheese - Sign Type A
Job Location	2445 Fontain Road San Jose, CA

INPUT DATA

Exposure category (B, C or D)		=	C	
Risk Category		=	II	
Nominal Design Windspeed	V_{ULT}	=	110	mph
Topographic factor	K_{zt}	=	1	Flat
Height of the sign	h	=	24	ft
Average Vertical dimension (for wall, s = h)	s	=	5.252	ft
Horizontal dimension	B	=	16.08	ft
Dimension of return corner	L_r	=	0.56	ft

ANALYSIS

Velocity pressure (Based on section 29.4.2)

$q_h = 0.00256\ K_z K_{zt} K_d V^2$ = **24.54** psf

where:

q_h = velocity pressure at height h. (Eq. 29.3-1, page 249)

K_h = velocity pressure exposure coefficient = **0.93**

evaluated at height above ground level, h (Tab. 29.3-1, pg 251)

K_d = wind directionality factor. (Tab. 26.6-1, page 194) = **0.85**

Wind Force Low Rise Buildings (Sec. 30.4.2 & 29.4)

Max horizontal wind pressure = $p = q_h\ GC_p$ = = **22.98** psf

GC_p = external pressure coefficients (Fig. 30.4-1, page 277) **0.94**

A_s = B s = the gross area = **84.5** ft^2

DESIGN SUMMARY

Allowable Stress Design Wind Factor = **0.6**

Design Wind Pressure = **0.6 x p =** **16.00** psf

Design Windforce, F = **16.00 x As =** **1.352** kips

Weight of cabinet, DL = 676 Lbs

Anchor Design Hilti Kwik Bolt 3 Stainless Steel Masonry Anchors

Shear Required USE ICC-ESR#1385

V = 203 **1/2" Ø, x 3-1/2" Min. Embed.(10) Total** V=743

REGISTERED PROFESSIONAL ENGINEER TONY JACOB C59022 CIVIL STATE OF CALIFORNIA

3/4/2019

NOTE: SPECIAL INSPECTION REQUIRED FOR POST INSTALLED ANCHOR PER ICC-ESR#1385.

NOTES :

GENERAL :

- SIGN DESIGN IS BASED ON ADEQUATE EXISTING SUPPORT ELEMENTS.
- PROVIDE ISOLATION OF DISSIMILAR MATERIALS.
- COAT ALUMINUM IN CONTACT WITH CONCRETE WITH ZINC RICH PAINT.
- THERE IS NO PROTECTION ZONE AS DEFINED IN AISC 341-10.
- PROVIDE FULLY WELDED END CAPS AT EXPOSED OPEN ENDS OF STEEL / ALUM. TUBES, MATCH THICKNESS LIKE FOR LIKE.
- SLOPE TOP OF EXPOSED FOOTING AWAY FROM DIRECT BURIAL POSTS

ANCHORS :

- BRAND NAME APPROVED POST INSTALLED ANCHORS SPECIFIED ON PLANS MAY BE SUBSTITUTED BY APPROVED EQUAL.

STEEL :

DESIGN AND FABRICATION ACCORDING TO 2016 CBC

- PLATE, ANGLE, CHANNEL TEE, AND WIDE FLANGE: ASTM A36
- ROUND PIPE: ASTM A53 GRADE B OR EQUIVALENT.
- HSS ROUND, SQUARE, AND RECTANGULAR TUBE: ASTM A500 GRADE B OR EQUIVALENT
- ALL ANCHORS BOLTS SHOULD BE: ASTM F1554
- ALL STEEL MACHINED BOLTS SHOULD BE: ASTM A307
- ALL STAINLESS STEEL MACHINED BOLTS SHOULD BE: ASTM A276
- ALL BOLTS TO BE ZINC COATED BY (HOT DIPPED): ASTM A153 OR F2329
- BEARING TYPE CONNECTION REINFORCING REBAR: ASTM A615 GRADE 60 DEFORMED BARS

ALUMINUM :

DESIGN AND FABRICATION ACCORDING TO 2015 ALUM. DESIGN MANUAL

- PLATES, ANGLES, CHANNELS, TEE, AND SQUARE TUBING: ALUMINUM ALLOY 6061 - T6 WITH 0.098 LBS PER CUBIC INCH.

WELDING :

STEEL

DESIGN AND FABRICATION ACCORDING TO AWS D1.1.

- AWS CERTIFICATION REQUIRED FOR ALL STRUCTURAL WELDERS.
- E70 XX ELECTRODE FOR SMAW PROCESS.
- E70S XX ELECTRODE FOR GMAW PROCESS.
- ER7 XX ELECTRODE FOR GTAW PROCESS.
- E70T XX ELECTRODE FOR FCAW PROCESS.

ALL WELDS SHALL BE MADE WITH A FILLER METAL THAT CAN PRODUCE WELDS THAT HAVE A MINIMUM CHARPY V-NOTCH TOUGHNESS OF 20FT-LB AT ZERO 0° AS DETERMINED BY THE APPROPRIATE AWS A5 CLASSIFICATION TEST METHOD OR MFG'S. CERTIFICATION.

ALUMINUM

DESIGN AND FABRICATION ACCORDING TO AWS D1.2.

ALL WELDING IN ACCORDANCE WITH THE LATEST EDITION OF THE AWS A.5.10. FILLER ALLOYS PER TABLES M.9.1 & M.9.2 OF 2015 ALUMINUM DESIGN MANUAL.

www.yjinc.com
P.O. BOX 802050
SANTA CLARITA, CA. 91380
TEL. (661)259-0700 FAX. (661)259-0900

SHEET TITLE:

CHUCK E. CHEESE SIGN TYPE A

DRN BY: B.B.	DATE LAST REVISED: Mar 04, 2019	REV. NO.	REV. DATE	REVISED BY	PROJECT JOB #: JTS_43019_Chuck E Cheese_Signage_Fontain Rd_San Jose_CA.dwg
CHK BY: T.J.	PROJ. START DATE: Mar 1, 2019	1	-/-/-	--	PROJECT LOCATION: CHUCK E. CHEESE, 2445 FOUNTAIN RD., SAN JOSE, CA
REV BY: T.J.	SCALE: AS SHOWN	2	-/-/-	---	SHEET # 1 OF 1
plotted by: yjinc on 3.4.2019 @ 1:43 PM		3	-/-/-	--	

EXISTING

Building Division
FOR REFERENCE ONLY
Not an approval
Plans shall be available for field inspector

Sign B : 6' x 35.8' = 214.8 SQ FT

PROPOSED

Chuck E. Cheese

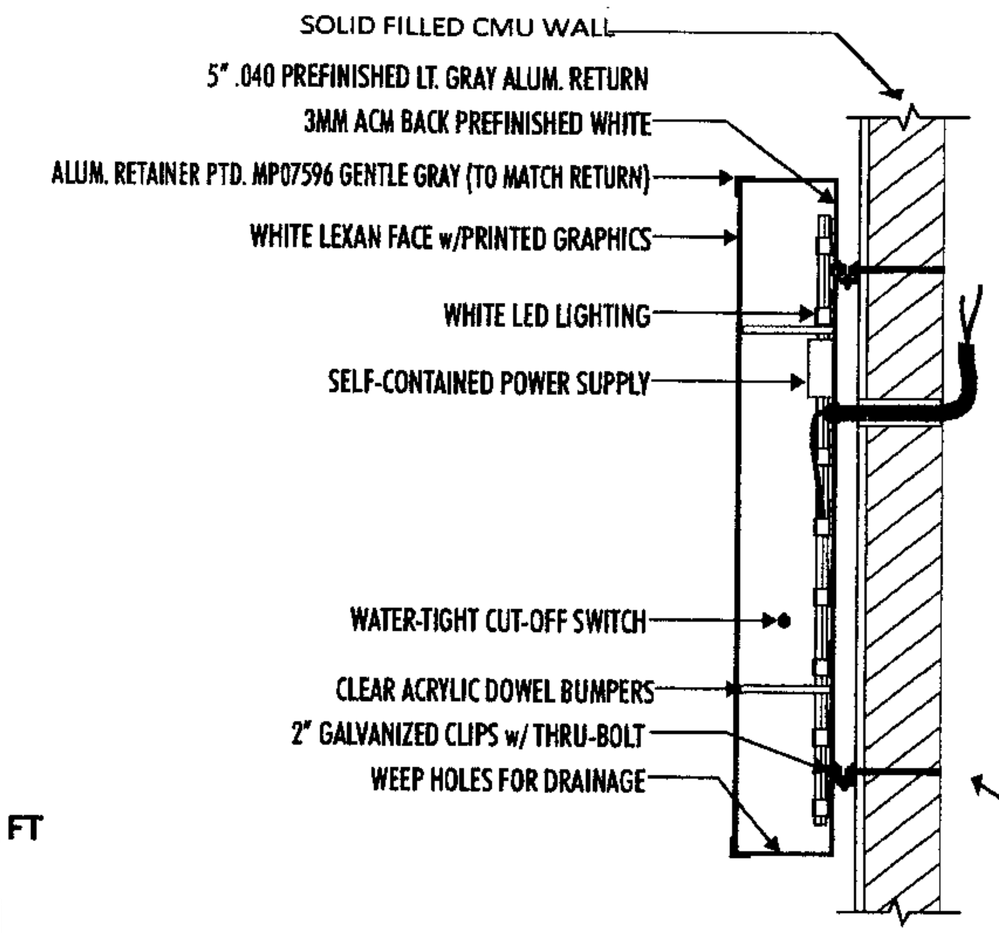

LOGO SECTION
N.T.S.

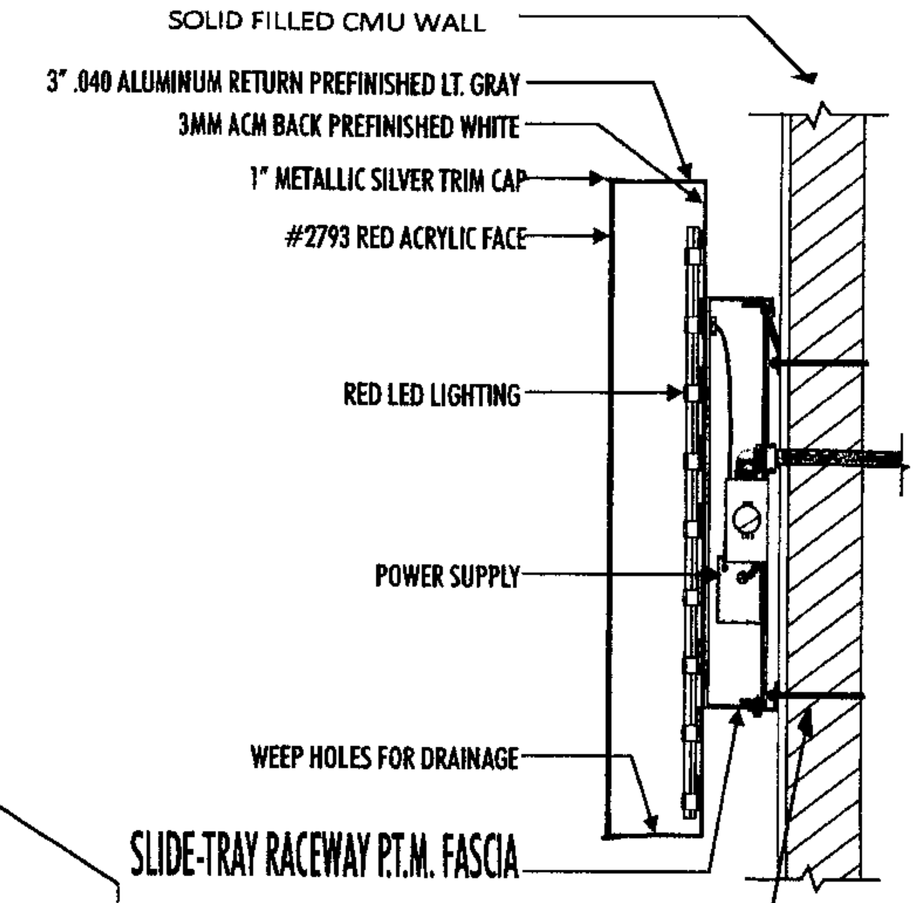

LETTER SECTION
N.T.S.

PMS 199C	
PMS WARM GRAY 8C	
PMS WARM GRAY 1C	
PMS 7520	
PMS 369	
PMS PROCESS BLACK	

MOUNTING METHOD
SEE ATTACHED ENGINEERING

CITY OF SAN JOSE
Department of Planning, Building & Code Enforcement
File No.: _____
By: _____ DATE _____
See attached Development Permit Adjustment P
conditions of approval.
Note: A Building Permit may also be required. P
check with the Building Division.

35'-10"

6'-0"±

Chuck E. Cheese

2'-6"± 3'-9"±

CHANNEL LETTERS ON RACEWAY
SCALE: 3/16" = 1'-0"

6'-0" x 35'-10" = 215 SQ. FT.

B

REAR ELEVATION
N.T.S.

Kieffer | Starlite
National Sign Manufacturers and Consultants
Dallas/Ft. Worth | Chicago | Sheboygan | Charlotte

ACCOUNT: Chuck E. Cheese's
LOCATION: 2445 Fontain Rd.; San Jose, CA
ACCT. REP: Tessa Miller DESIGNER: G. Owens
DATE: 10-25-18
COMPANION FILES
-

C UL US LISTED

REVISIONS:	INITIALS & DATE:
A INCREASED LOGO	GO/11-16-18
B ADDED DETAILS	GO/02-12-19
C -	-
D -	-
E -	-
F -	-
G -	-
H -	-

This is an original unpublished drawing submitted for use in connection with a project being planned for you by Kieffer Holding Co. It is not to be reproduced, copied or exhibited in any fashion without the written permission of Kieffer Holding Company.

For Contact Information
visit us at
www.kssigngroup.com

KS1800456B

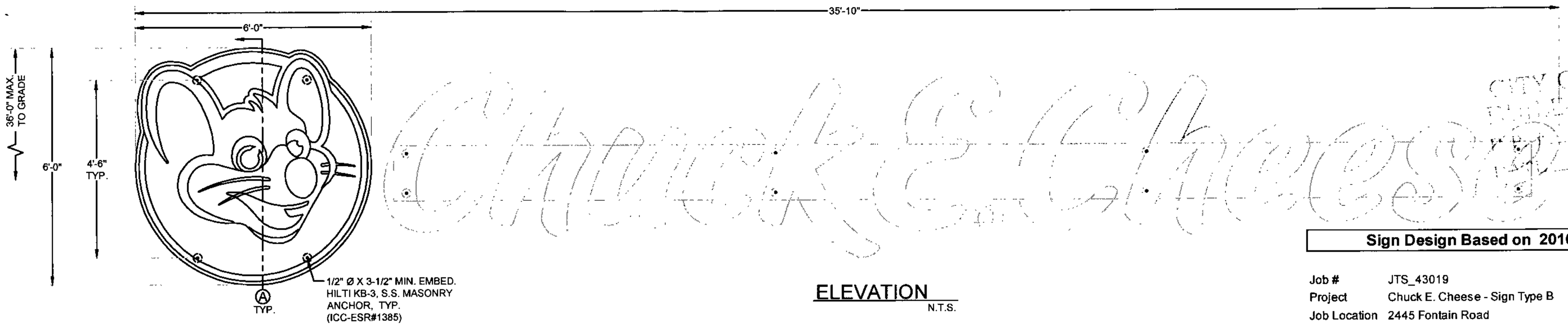

ELEVATION
N.T.S.

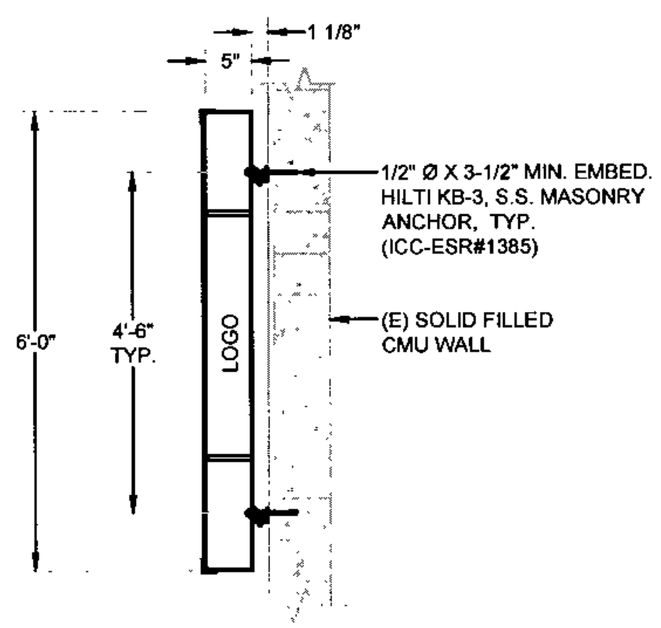

A SECTION VIEW @ LOGO
N.T.S.

REGISTERED PROFESSIONAL ENGINEER
TONY JACOB
C59022
CIVIL
STATE OF CALIFORNIA
3/4/2019

Sign Design Based on 2016 CBC

Job #	JTS_43019
Project	Chuck E. Cheese - Sign Type B
Job Location	2445 Fontain Road San Jose, CA

INPUT DATA			Consider LOGO	
Exposure category (B, C or D)		=	C	
Risk Category		=	II	
Nominal Design Windspeed	V_{ULT}	=	110	mph
Topographic factor	K_{zt}	=	1	Flat
Height of the sign	h	=	36	ft
Vertical dimension (for wall, s = h)	s	=	6	ft
Average Horizontal dimension	B	=	4.888	ft
Dimension of return corner	L_r	=	0.42	ft

ANALYSIS

Velocity pressure (Based on section 29.4.2)

$q_h = 0.00256\ K_z K_{zt} K_d V^2$ = **26.75** psf

where:

q_h = velocity pressure at height h. (Eq. 29.3-1, page 249)

K_h = velocity pressure exposure coefficient = **1.02**

evaluated at height above ground level, h (Tab. 29.3-1, pg 251)

K_d = wind directionality factor. (Tab. 26.6-1, page 194) = **0.85**

Wind Force Low Rise Buildings (Sec. 30.4.2 & 29.4)

Max horizontal wind pressure = $p = q_h GC_p$ = **27.22** psf

GC_p = external pressure coefficients (Fig. 30.4-1, page 277) **1.02**

A_s = B s = the gross area = **29.3** ft^2

DESIGN SUMMARY

Allowable Stress Design Wind Factor = 0.6

Design Wind Pressure = 0.6 x p = 16.33 psf

Design Windforce, F = 16.33 x As = 0.479 kips

Sign Parameters:

Weight of cabinet, DL =	235 Lbs
Vertical distance between anchors, y =	4.50 ft
b (return) =	0.42 ft
Offset from wall =	0.09 ft
Min. no. of top or bott. anchors =	2 no.

Anchor Design Hilti Kwik Bolt 3 Stainless Steel Masonry Anchors

Tension Req'd. USE ICC-ESR#1385

T = 128 **1/2" Ø, x 3-1/2" Min. Embed.** T=724

Shear Required

V = 59 V=743

Unity = (128 / 724) + (59 / 743) = 0.26 < 1 (OK)

NOTE: SPECIAL INSPECTION REQUIRED FOR POST INSTALLED ANCHOR PER ICC-ESR#1385.

NOTES :

GENERAL :

- SIGN DESIGN IS BASED ON ADEQUATE EXISTING SUPPORT ELEMENTS.
- PROVIDE ISOLATION OF DISSIMILAR MATERIALS.
- COAT ALUMINUM IN CONTACT WITH CONCRETE WITH ZINC RICH PAINT.
- THERE IS NO PROTECTION ZONE AS DEFINED IN AISC 341-10.
- PROVIDE FULLY WELDED END CAPS AT EXPOSED OPEN ENDS OF STEEL / ALUM. TUBES, MATCH THICKNESS LIKE FOR LIKE.
- SLOPE TOP OF EXPOSED FOOTING AWAY FROM DIRECT BURIAL POSTS

ANCHORS :

- BRAND NAME APPROVED POST INSTALLED ANCHORS SPECIFIED ON PLANS MAY BE SUBSTITUTED BY APPROVED EQUAL.

STEEL :

DESIGN AND FABRICATION ACCORDING TO 2016 CBC

- PLATE, ANGLE, CHANNEL TEE, AND WIDE FLANGE: ASTM A36
- ROUND PIPE: ASTM A53 GRADE B OR EQUIVALENT.
- HSS ROUND, SQUARE, AND RECTANGULAR TUBE: ASTM A500 GRADE B OR EQUIVALENT
- ALL ANCHORS BOLTS SHOULD BE: ASTM F1554
- ALL STEEL MACHINED BOLTS SHOULD BE: ASTM A307
- ALL STAINLESS STEEL MACHINED BOLTS SHOULD BE: ASTM A276
- ALL BOLTS TO BE ZINC COATED BY (HOT DIPPED): ASTM A153 OR F2329
- BEARING TYPE CONNECTION REINFORCING REBAR: ASTM A615 GRADE 60 DEFORMED BARS

ALUMINUM :

DESIGN AND FABRICATION ACCORDING TO 2015 ALUM. DESIGN MANUAL

- PLATES, ANGLES, CHANNELS, TEE, AND SQUARE TUBING: ALUMINUM ALLOY 6061 - T6 WITH 0.098 LBS PER CUBIC INCH.

WELDING :

STEEL

DESIGN AND FABRICATION ACCORDING TO AWS D1.1.

- AWS CERTIFICATION REQUIRED FOR ALL STRUCTURAL WELDERS.
- E70 XX ELECTRODE FOR SMAW PROCESS.
- E70S XX ELECTRODE FOR GMAW PROCESS.
- ER7 XX ELECTRODE FOR GTAW PROCESS.
- E70T XX ELECTRODE FOR FCAW PROCESS.

ALL WELDS SHALL BE MADE WITH A FILLER METAL THAT CAN PRODUCE WELDS THAT HAVE A MINIMUM CHARPY V-NOTCH TOUGHNESS OF 20FT-LB AT ZERO 0° AS DETERMINED BY THE APPROPRIATE AWS A5 CLASSIFICATION TEST METHOD OR MFG'S. CERTIFICATION.

ALUMINUM

DESIGN AND FABRICATION ACCORDING TO AWS D1.2.

ALL WELDING IN ACCORDANCE WITH THE LATEST EDITION OF THE AWS A.5.10. FILLER ALLOYS PER TABLES M.9.1 & M.9.2 OF 2015 ALUMINUM DESIGN MANUAL.

www.yjinc.com
P.O. BOX 802050
SANTA CLARITA, CA. 91380
TEL. (661)259-0700 FAX. (661)259-0900

SHEET TITLE:

CHUCK E. CHEESE
SIGN TYPE B (LOGO)

DRN BY: B.B.	DATE LAST REVISED: Mar 04, 2019	REV. NO.	REV. DATE	REVISED BY	PROJECT JOB #: JTS_43019_Chuck E Cheese_Signage_Fontain Rd_San Jose_CA.dwg
CHK BY: T.J.	PROJ. START DATE: Mar 1, 2019	1	--/--/--	---	PROJECT LOCATION: CHUCK E. CHEESE, 2445 FOUNTAIN RD., SAN JOSE, CA
REV BY: T.J.	SCALE: AS SHOWN	2	--/--/--	---	SHEET # 1 OF 1
plotted by: yjinc on 3.4.2019 @ 1:44 PM		3	--/--/--	---	

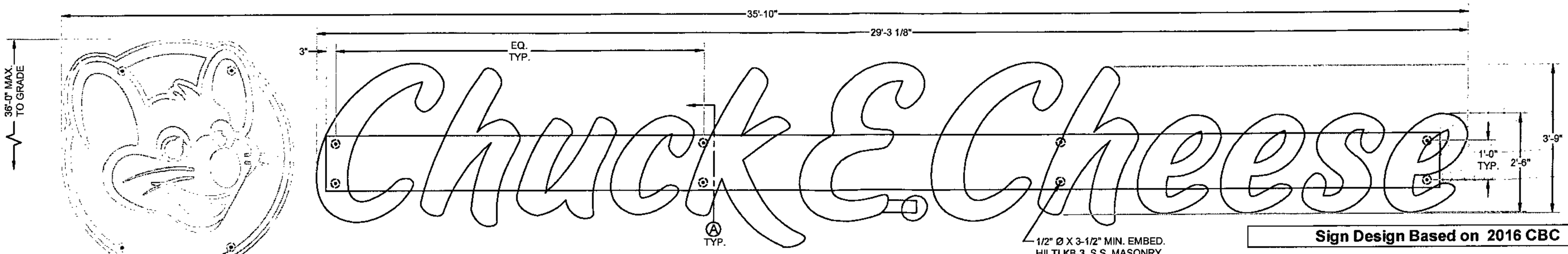

ELEVATION
N.T.S.

Sign Design Based on 2016 CBC

Job #	JTS_43019
Project	Chuck E. Cheese - Sign Type B
Job Location	2445 Fontain Road San Jose, CA

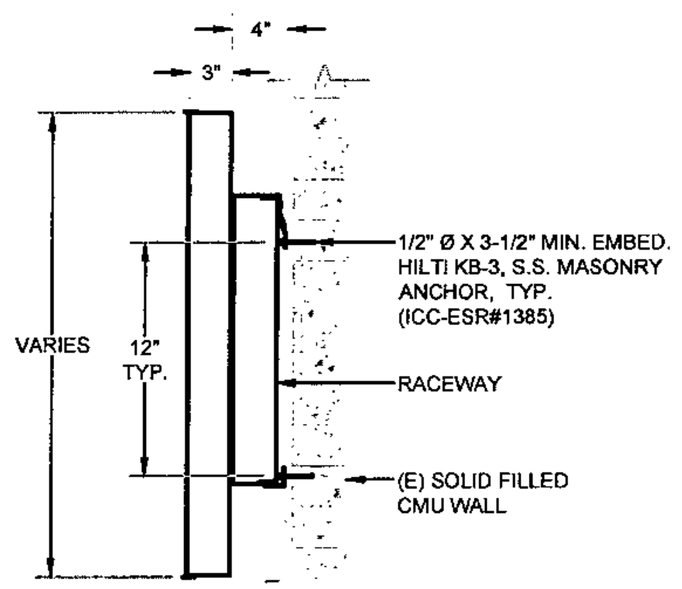

A SECTION VIEW
@ CHANNEL LETTERS N.T.S.

REGISTERED PROFESSIONAL ENGINEER
TONY JACOB
C59022
CIVIL
STATE OF CALIFORNIA
3/4/2019

INPUT DATA

			Consider Letters	
Exposure category (B, C or D)		=	C	
Risk Category		=	II	
Nominal Design Windspeed	V_{ULT}	=	110	mph
Topographic factor	K_{zt}	=	1	Flat
Height of the sign	h	=	36	ft
Average Vertical dimension (for wall, s = h)	s	=	2.584	ft
Horizontal dimension	B	=	29.26	ft
Dimension of return corner	L_r	=	0.25	ft

ANALYSIS

Velocity pressure (Based on section 29.4.2)

$q_h = 0.00256\ K_z K_{zt} K_d V^2$ = **26.75** psf

where:

q_h = velocity pressure at height h. (Eq. 29.3-1, page 249)

K_h = velocity pressure exposure coefficient = **1.02**

evaluated at height above ground level, h (Tab. 29.3-1, pg 251)

K_d = wind directionality factor. (Tab. 26.6-1, page 194) = **0.85**

Wind Force Low Rise Buildings (Sec. 30.4.2 & 29.4)

Max horizontal wind pressure = $p = q_h\ GC_p$ = = **25.28** psf

GC_p = external pressure coefficients (Fig. 30.4-1, page 277) **0.94**

A_s = B s = the gross area = **75.6** ft^2

DESIGN SUMMARY

Allowable Stress Design Wind Factor = **0.6**

Design Wind Pressure = **0.6 x p =** **16.00** psf

Design Windforce, F = **16.00 x As =** **1.21** kips

Sign Parameters:

Weight of cabinet, DL =	605 Lbs
Vertical distance between anchors,y =	1.00 ft
b (return) =	0.25 ft
Offset from wall =	0.33 ft
Min. no. of top or bott. anchors =	4 no.

Anchor Design Hilti Kwik Bolt 3 Stainless Steel Masonry Anchors

Tension Req'd. USE ICC-ESR#1385

T = 293 **1/2" Ø, x 3-1/2" Min. Embed.** T=724

Shear Required

V = 101 V=743

Unity = (293 / 724) + (101 / 743) = 0.54 < 1 (OK)

NOTE: SPECIAL INSPECTION REQUIRED FOR POST INSTALLED ANCHOR PER ICC-ESR#1385.

NOTES :

GENERAL :

- SIGN DESIGN IS BASED ON ADEQUATE EXISTING SUPPORT ELEMENTS.
- PROVIDE ISOLATION OF DISSIMILAR MATERIALS.
- COAT ALUMINUM IN CONTACT WITH CONCRETE WITH ZINC RICH PAINT.
- THERE IS NO PROTECTION ZONE AS DEFINED IN AISC 341-10.
- PROVIDE FULLY WELDED END CAPS AT EXPOSED OPEN ENDS OF STEEL / ALUM. TUBES, MATCH THICKNESS LIKE FOR LIKE.
- SLOPE TOP OF EXPOSED FOOTING AWAY FROM DIRECT BURIAL POSTS

ANCHORS :

- BRAND NAME APPROVED POST INSTALLED ANCHORS SPECIFIED ON PLANS MAY BE SUBSTITUTED BY APPROVED EQUAL.

STEEL :

DESIGN AND FABRICATION ACCORDING TO 2016 CBC

- PLATE, ANGLE, CHANNEL TEE, AND WIDE FLANGE: ASTM A36
- ROUND PIPE: ASTM A53 GRADE B OR EQUIVALENT.
- HSS ROUND, SQUARE, AND RECTANGULAR TUBE: ASTM A500 GRADE B OR EQUIVALENT
- ALL ANCHORS BOLTS SHOULD BE: ASTM F1554
- ALL STEEL MACHINED BOLTS SHOULD BE: ASTM A307
- ALL STAINLESS STEEL MACHINED BOLTS SHOULD BE: ASTM A276
- ALL BOLTS TO BE ZINC COATED BY (HOT DIPPED): ASTM A153 OR F2329
- BEARING TYPE CONNECTION REINFORCING REBAR: ASTM A615 GRADE 60 DEFORMED BARS

ALUMINUM :

DESIGN AND FABRICATION ACCORDING TO 2015 ALUM. DESIGN MANUAL

- PLATES, ANGLES, CHANNELS, TEE, AND SQUARE TUBING: ALUMINUM ALLOY 6061 - T6 WITH 0.098 LBS PER CUBIC INCH.

WELDING :

STEEL

DESIGN AND FABRICATION ACCORDING TO AWS D1.1.

- AWS CERTIFICATION REQUIRED FOR ALL STRUCTURAL WELDERS.
- E70 XX ELECTRODE FOR SMAW PROCESS.
- E70S XX ELECTRODE FOR GMAW PROCESS.
- ER7 XX ELECTRODE FOR GTAW PROCESS.
- E70T XX ELECTRODE FOR FCAW PROCESS.

ALL WELDS SHALL BE MADE WITH A FILLER METAL THAT CAN PRODUCE WELDS THAT HAVE A MINIMUM CHARPY V-NOTCH TOUGHNESS OF 20FT-LB AT ZERO 0° AS DETERMINED BY THE APPROPRIATE AWS A5 CLASSIFICATION TEST METHOD OR MFG'S. CERTIFICATION.

ALUMINUM

DESIGN AND FABRICATION ACCORDING TO AWS D1.2.

ALL WELDING IN ACCORDANCE WITH THE LATEST EDITION OF THE AWS A.5.10. FILLER ALLOYS PER TABLES M.9.1 & M.9.2 OF 2015 ALUMINUM DESIGN MANUAL.

www.yjinc.com
P.O. BOX 802050
SANTA CLARITA, CA. 91380
TEL. (661)259-0700 FAX. (661)259-0900

SHEET TITLE:

CHUCK E. CHEESE
SIGN TYPE B (CHANNEL LETTERS)

DRN BY: B.B.	DATE LAST REVISED: Mar 04, 2019	REV. NO.	REV. DATE	REVISED BY	PROJECT JOB #: JTS_43019_Chuck E Cheese_Signage_Fontain Rd_San Jose_CA.dwg
CHK BY: T.J.	PROJ. START DATE: Mar 1, 2019	1	-/-/-	—	PROJECT LOCATION: CHUCK E. CHEESE, 2445 FOUNTAIN RD., SAN JOSE, CA
REV BY: T.J.	SCALE: AS SHOWN	2	-/-/-	—	SHEET # 1 OF 1
plotted by: yjinc on 3.4.2019 @ 1:44 PM		3	-/-/-	—	

EXISTING

Building Division
FOR REFERENCE ONLY
Not an approval
Plans shall be available for field inspector

Sign C: 5'x32.7'=163.5SQFT

PROPOSED

Chuck E. Cheese

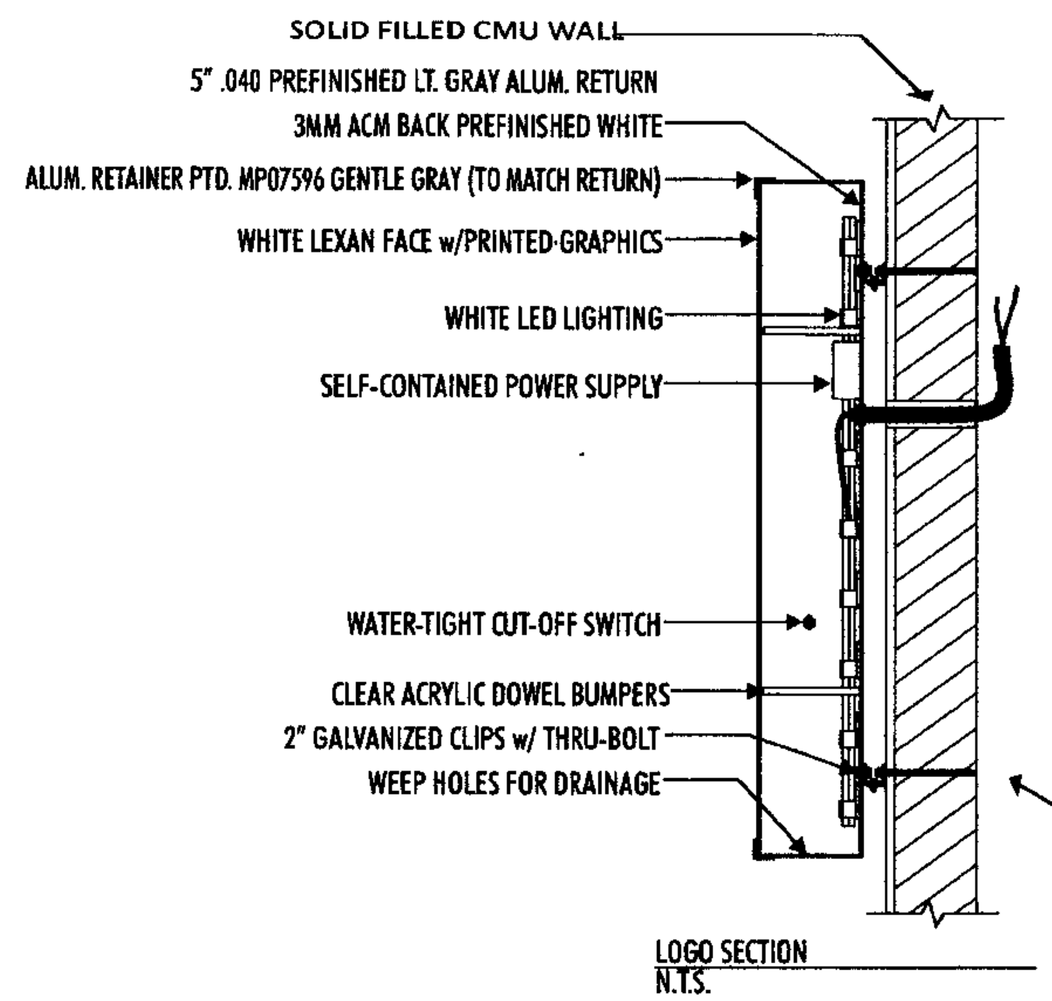

LOGO SECTION
N.T.S.

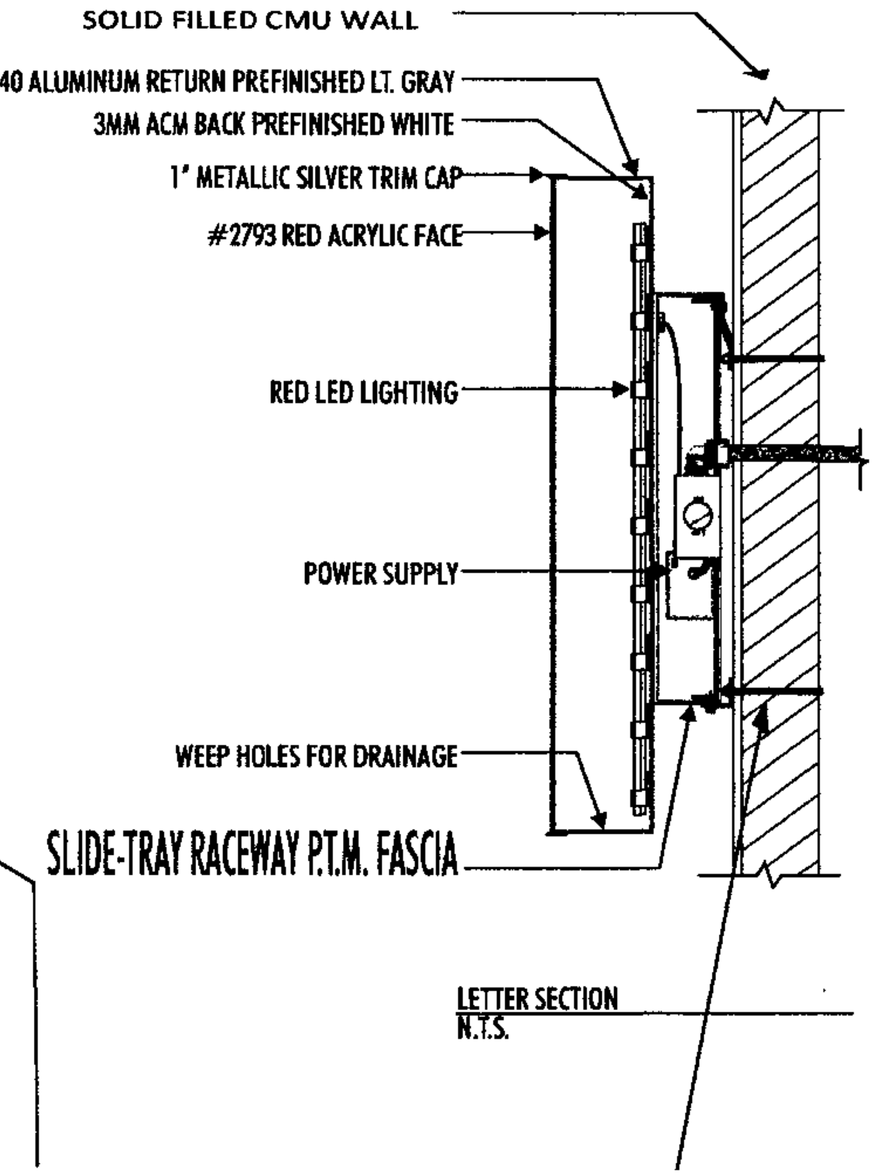

LETTER SECTION
N.T.S.

	PMS 199C
	PMS WARM GRAY 8C
	PMS WARM GRAY 1C
	PMS 7520
	PMS 369
	PMS PROCESS BLACK

MOUNTING METHOD
SEE ATTACHED ENGINEERING

CITY OF SAN JOSE
Department of Planning, Building & Code Enforcement
File No.: _____
By: _____ DATE
See attached Development Permit Adjustment sheet for conditions of approval
Note: A Building Permit may also be required. Please check with the Building Division.

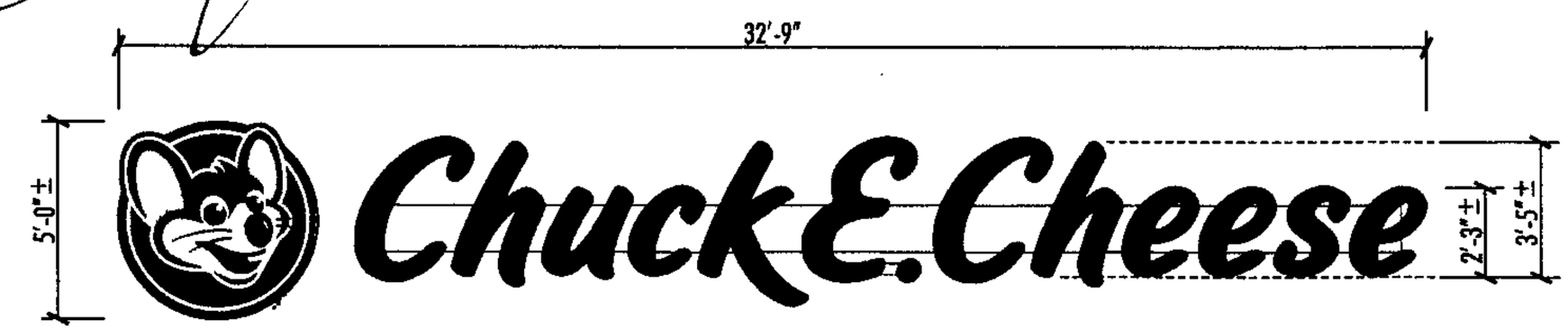

CHANNEL LETTERS ON RACEWAY
SCALE: 3/16" = 1'-0"

5'-0" x 32'-9" = 163.7 SQ. FT.

CORNER ELEVATION
N.T.S.

Kieffer | Starlite
National Sign Manufacturers and Consultants
Dallas/Ft. Worth | Chicago | Sheboygan | Charlotte

ACCOUNT: Chuck E. Cheese's
LOCATION: 2445 Fontain Rd.; San Jose, CA
ACCT. REP: Tessa Miller DESIGNER: G. Owens
DATE: 10-25-18
COMPANION FILES
-

C UL US LISTED

REVISIONS:	INITIALS & DATE:
A ADDED CORNER SIGN BACK TO PKG.	GO/12-17-18
B ADDED DETAILS	GO/02-12-19
C -	-
D -	-
E -	-
F -	-
G -	-
H -	-

This is an original unpublished drawing submitted for use in connection with a project being planned for you by Kieffer Holding Co. It is not to be reproduced, copied or exhibited in any fashion without the written permission of Kieffer Holding Company.

For Contact Information visit us at www.kssigngroup.com

KS1800456C

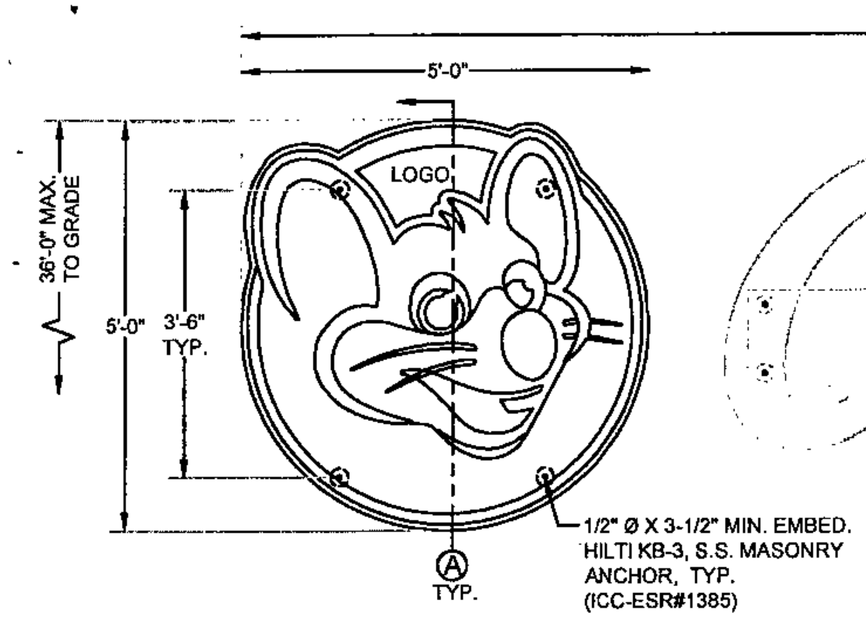

Chuck E. Cheese

ELEVATION
N.T.S.

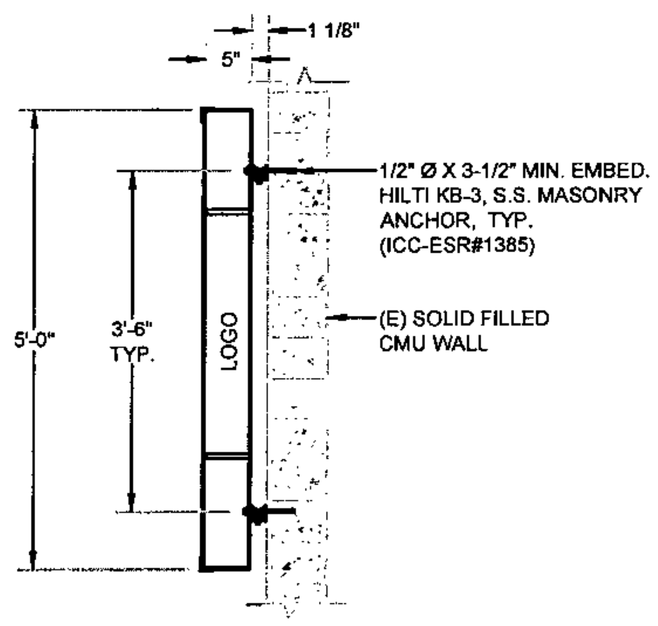

Ⓐ SECTION VIEW @ LOGO
N.T.S.

REGISTERED PROFESSIONAL ENGINEER TONY JACOB C59022 CIVIL STATE OF CALIFORNIA

3/4/2019

NOTE: SPECIAL INSPECTION REQUIRED FOR POST INSTALLED ANCHOR PER ICC-ESR#1385.

NOTES :

GENERAL :

- SIGN DESIGN IS BASED ON ADEQUATE EXISTING SUPPORT ELEMENTS.
- PROVIDE ISOLATION OF DISSIMILAR MATERIALS.
- COAT ALUMINUM IN CONTACT WITH CONCRETE WITH ZINC RICH PAINT.
- THERE IS NO PROTECTION ZONE AS DEFINED IN AISC 341-10.
- PROVIDE FULLY WELDED END CAPS AT EXPOSED OPEN ENDS OF STEEL / ALUM. TUBES, MATCH THICKNESS LIKE FOR LIKE.
- SLOPE TOP OF EXPOSED FOOTING AWAY FROM DIRECT BURIAL POSTS

ANCHORS :

- BRAND NAME APPROVED POST INSTALLED ANCHORS SPECIFIED ON PLANS MAY BE SUBSTITUTED BY APPROVED EQUAL.

STEEL :

DESIGN AND FABRICATION ACCORDING TO 2016 CBC

- PLATE, ANGLE, CHANNEL TEE, AND WIDE FLANGE: ASTM A36
- ROUND PIPE: ASTM A53 GRADE B OR EQUIVALENT.
- HSS ROUND, SQUARE, AND RECTANGULAR TUBE: ASTM A500 GRADE B OR EQUIVALENT
- ALL ANCHORS BOLTS SHOULD BE: ASTM F1554
- ALL STEEL MACHINED BOLTS SHOULD BE: ASTM A307
- ALL STAINLESS STEEL MACHINED BOLTS SHOULD BE: ASTM A276
- ALL BOLTS TO BE ZINC COATED BY (HOT DIPPED): ASTM A153 OR F2329
- BEARING TYPE CONNECTION REINFORCING REBAR: ASTM A615 GRADE 60 DEFORMED BARS

ALUMINUM :

DESIGN AND FABRICATION ACCORDING TO 2015 ALUM. DESIGN MANUAL

- PLATES, ANGLES, CHANNELS, TEE, AND SQUARE TUBING: ALUMINUM ALLOY 6061 - T6 WITH 0.098 LBS PER CUBIC INCH.

WELDING :

STEEL

DESIGN AND FABRICATION ACCORDING TO AWS D1.1.

- AWS CERTIFICATION REQUIRED FOR ALL STRUCTURAL WELDERS.
- E70 XX ELECTRODE FOR SMAW PROCESS.
- E70S XX ELECTRODE FOR GMAW PROCESS.
- ER7 XX ELECTRODE FOR GTAW PROCESS.
- E70T XX ELECTRODE FOR FCAW PROCESS.

ALL WELDS SHALL BE MADE WITH A FILLER METAL THAT CAN PRODUCE WELDS THAT HAVE A MINIMUM CHARPY V-NOTCH TOUGHNESS OF 20FT-LB AT ZERO 0° AS DETERMINED BY THE APPROPRIATE AWS A5 CLASSIFICATION TEST METHOD OR MFG'S. CERTIFICATION.

ALUMINUM

DESIGN AND FABRICATION ACCORDING TO AWS D1.2.
ALL WELDING IN ACCORDANCE WITH THE LATEST EDITION OF THE AWS A.5.10.
FILLER ALLOYS PER TABLES M.9.1 & M.9.2 OF 2015 ALUMINUM DESIGN MANUAL.

Sign Design Based on 2016 CBC

Job #	JTS_43019
Project	Chuck E. Cheese - Sign Type C
Job Location	2445 Fontain Road San Jose, CA

INPUT DATA	Consider LOGO			
Exposure category (B, C or D)		=	C	
Risk Category		=	II	
Nominal Design Windspeed	V_{ULT}	=	110	mph
Topographic factor	K_{zt}	=	1	Flat
Height of the sign	h	=	36	ft
Vertical dimension (for wall, s = h)	s	=	5	ft
Average Horizontal dimension	B	=	4.072	ft
Dimension of return corner	L_r	=	0.42	ft

ANALYSIS

Velocity pressure (Based on section 29.4.2)

$q_h = 0.00256\ K_z K_{zt} K_d V^2$ = **26.75** psf

where:

q_h = velocity pressure at height h. (Eq. 29.3-1, page 249)

K_h = velocity pressure exposure coefficient = **1.02**

evaluated at height above ground level, h (Tab. 29.3-1, pg 251)

K_d = wind directionality factor. (Tab. 26.6-1, page 194) = **0.85**

Wind Force Low Rise Buildings (Sec. 30.4.2 & 29.4)

Max horizontal wind pressure = $p = q_h GC_p$ = **27.97** psf

GC_p = external pressure coefficients (Fig. 30.4-1, page 277) **1.05**

A_s = B s = the gross area = **20.4** ft^2

DESIGN SUMMARY

Allowable Stress Design Wind Factor = 0.6

Design Wind Pressure = 0.6 x p = 16.78 psf

Design Windforce, F = 16.78 x As = 0.342 kips

Sign Parameters:

Weight of cabinet, DL =	163 Lbs
Vertical distance between anchors,y =	3.50 ft
b (return) =	0.42 ft
Offset from wall =	0.09 ft
Min. no. of top or bott. anchors =	2 no.

Anchor Design Hilti Kwik Bolt 3 Stainless Steel Masonry Anchors

Tension Req'd. USE ICC-ESR#1385

T = 92 **1/2" Ø, x 3-1/2" Min. Embed.** T=724

Shear Required

V = 41 V=743

Unity = (92 / 724) + (41 / 743) = 0.18 **< 1 (OK)**

www.yjinc.com
P.O. BOX 802050
SANTA CLARITA, CA. 91380
TEL. (661)259-0700 FAX. (661)259-0900

SHEET TITLE:

CHUCK E. CHEESE
SIGN TYPE C (LOGO)

DRN BY: B.B.	DATE LAST REVISED: Mar 04, 2019	REV. NO.	REV. DATE	REVISED BY	PROJECT JOB #: JTS_43019_Chuck E Cheese_Signage_Fontain Rd_San Jose_CA.dwg
CHK BY: T.J.	PROJ. START DATE: Mar 1, 2019	1	--/--/--	--	PROJECT LOCATION: CHUCK E. CHEESE, 2445 FOUNTAIN RD., SAN JOSE, CA
REV BY: T.J.	SCALE: AS SHOWN	2	--/--/--	--	
plotted by: yjinc on 3.4.2019 @ 1:44 PM		3	--/--/--	--	

SHEET # 1 OF 1

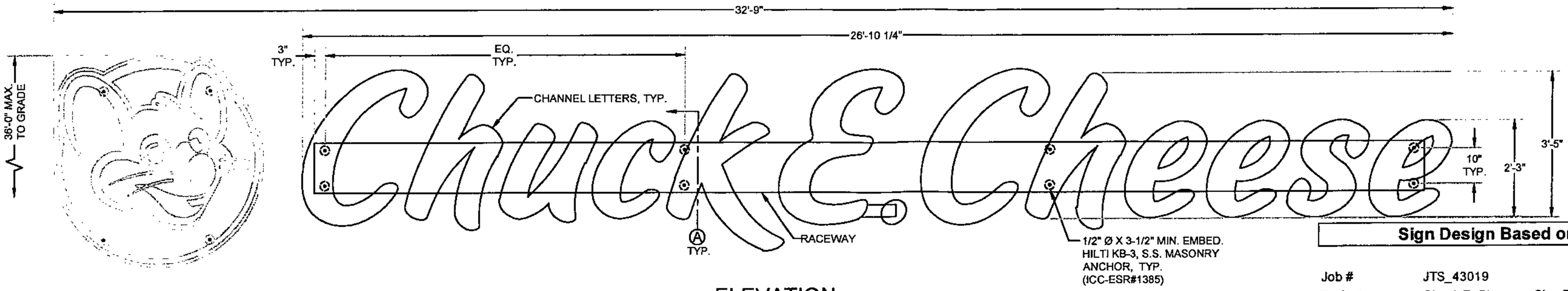

ELEVATION
N.T.S.

Sign Design Based on 2016 CBC

Job #	JTS_43019
Project	Chuck E. Cheese - Sign Type C
Job Location	2445 Fontain Road San Jose, CA

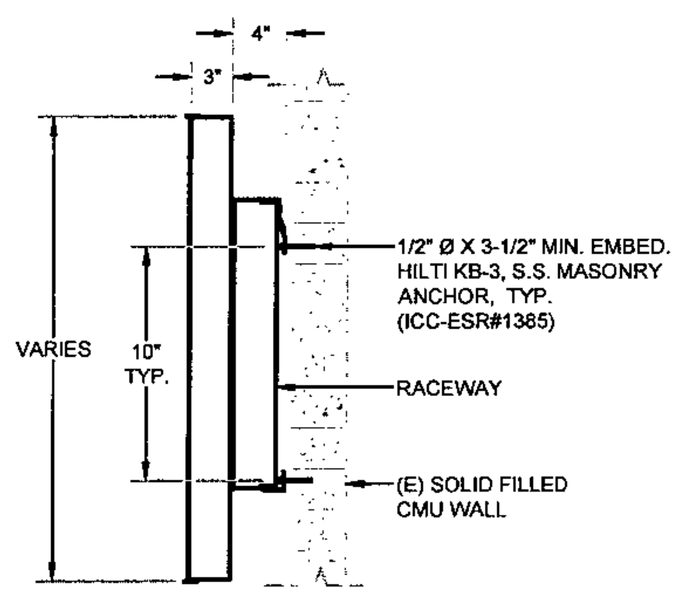

Ⓐ SECTION VIEW
@ CHANNEL LETTERS N.T.S.

INPUT DATA — Consider Letters

Exposure category (B, C or D)		=	C	
Risk Category		=	II	
Nominal Design Windspeed	V_{ULT}	=	110	mph
Topographic factor	K_{zt}	=	1	Flat
Height of the sign	h	=	36	ft
Average Vertical dimension (for wall, s = h)	s	=	2.412	ft
Horizontal dimension	B	=	26.85	ft
Dimension of return corner	L_r	=	0.25	ft

ANALYSIS

Velocity pressure (Based on section 29.4.2)

$q_h = 0.00256\ K_z K_{zt} K_d V^2$ = **26.75** psf

where:

q_h = velocity pressure at height h. (Eq. 29.3-1, page 249)

K_h = velocity pressure exposure coefficient = **1.02**

evaluated at height above ground level, h (Tab. 29.3-1, pg 251)

K_d = wind directionality factor. (Tab. 26.6-1, page 194) = **0.85**

Wind Force Low Rise Buildings (Sec. 30.4.2 & 29.4)

Max horizontal wind pressure = $p = q_h GC_p$ = **25.59** psf

GC_p = external pressure coefficients (Fig. 30.4-1, page 277) **0.96**

A_s = B s = the gross area = **64.8** ft^2

DESIGN SUMMARY

Allowable Stress Design Wind Factor = 0.6

Design Wind Pressure = 0.6 x p = 16.00 psf

Design Windforce, F = 16.00 x As = 1.036 kips

Sign Parameters:

Weight of cabinet, DL =	518 Lbs
Vertical distance between anchors, y =	0.83 ft
b (return) =	0.25 ft
Offset from wall =	0.33 ft
Min. no. of top or bott. anchors =	4 no.

Anchor Design Hilti Kwik Bolt 3 Stainless Steel Masonry Anchors

Tension Req'd. USE ICC-ESR#1385

T = 267 **1/2" Ø, x 3-1/2" Min. Embed.** T=724

Shear Required

V = 86 V=743

Unity = (267 / 724) + (86 / 743) = 0.49 **< 1 (OK)**

REGISTERED PROFESSIONAL ENGINEER TONY JACOB C59022 CIVIL STATE OF CALIFORNIA

3/4/2019

NOTE: SPECIAL INSPECTION REQUIRED FOR POST INSTALLED ANCHOR PER ICC-ESR#1385.

NOTES :

GENERAL :

- SIGN DESIGN IS BASED ON ADEQUATE EXISTING SUPPORT ELEMENTS.
- PROVIDE ISOLATION OF DISSIMILAR MATERIALS.
- COAT ALUMINUM IN CONTACT WITH CONCRETE WITH ZINC RICH PAINT.
- THERE IS NO PROTECTION ZONE AS DEFINED IN AISC 341-10.
- PROVIDE FULLY WELDED END CAPS AT EXPOSED OPEN ENDS OF STEEL / ALUM. TUBES, MATCH THICKNESS LIKE FOR LIKE.
- SLOPE TOP OF EXPOSED FOOTING AWAY FROM DIRECT BURIAL POSTS

ANCHORS :

- BRAND NAME APPROVED POST INSTALLED ANCHORS SPECIFIED ON PLANS MAY BE SUBSTITUTED BY APPROVED EQUAL.

STEEL :

DESIGN AND FABRICATION ACCORDING TO 2016 CBC

- PLATE, ANGLE, CHANNEL TEE, AND WIDE FLANGE: ASTM A36
- ROUND PIPE: ASTM A53 GRADE B OR EQUIVALENT.
- HSS ROUND, SQUARE, AND RECTANGULAR TUBE: ASTM A500 GRADE B OR EQUIVALENT
- ALL ANCHORS BOLTS SHOULD BE: ASTM F1554
- ALL STEEL MACHINED BOLTS SHOULD BE: ASTM A307
- ALL STAINLESS STEEL MACHINED BOLTS SHOULD BE: ASTM A276
- ALL BOLTS TO BE ZINC COATED BY (HOT DIPPED): ASTM A153 OR F2329
- BEARING TYPE CONNECTION REINFORCING REBAR: ASTM A615 GRADE 60 DEFORMED BARS

ALUMINUM :

DESIGN AND FABRICATION ACCORDING TO 2015 ALUM. DESIGN MANUAL

- PLATES, ANGLES, CHANNELS, TEE, AND SQUARE TUBING: ALUMINUM ALLOY 6061 - T6 WITH 0.098 LBS PER CUBIC INCH.

WELDING :

STEEL

DESIGN AND FABRICATION ACCORDING TO AWS D1.1.

- AWS CERTIFICATION REQUIRED FOR ALL STRUCTURAL WELDERS.
- E70 XX ELECTRODE FOR SMAW PROCESS.
- E70S XX ELECTRODE FOR GMAW PROCESS.
- ER7 XX ELECTRODE FOR GTAW PROCESS.
- E70T XX ELECTRODE FOR FCAW PROCESS.

ALL WELDS SHALL BE MADE WITH A FILLER METAL THAT CAN PRODUCE WELDS THAT HAVE A MINIMUM CHARPY V-NOTCH TOUGHNESS OF 20FT-LB AT ZERO 0° AS DETERMINED BY THE APPROPRIATE AWS A5 CLASSIFICATION TEST METHOD OR MFG'S. CERTIFICATION.

ALUMINUM

DESIGN AND FABRICATION ACCORDING TO AWS D1.2.

ALL WELDING IN ACCORDANCE WITH THE LATEST EDITION OF THE AWS A.5.10. FILLER ALLOYS PER TABLES M.9.1 & M.9.2 OF 2015 ALUMINUM DESIGN MANUAL.

www.yjinc.com
P.O. BOX 802050
SANTA CLARITA, CA. 91380
TEL. (661)259-0700 FAX. (661)259-0900

SHEET TITLE:

CHUCK E. CHEESE
SIGN TYPE C (CHANNEL LETTERS)

DRN BY: B.B.	DATE LAST REVISED: Mar 04, 2019	REV. NO.	REV. DATE	REVISED BY
CHK BY: T.J.	PROJ. START DATE: Mar 1, 2019	1	-/-/-	–
REV BY: T.J.	SCALE: AS SHOWN	2	-/-/-	–
plotted by: yjinc on 3.4.2019 @ 1:45 PM		3	-/-/-	–

PROJECT JOB #: JTS_43019_Chuck E Cheese_Signage_Fontain Rd_San Jose_CA.dwg

PROJECT LOCATION: CHUCK E. CHEESE
2445 FOUNTAIN RD.
SAN JOSE, CA

SHEET # 1 OF 1