9962735

9962735

PLACE

Address Key

203502

Sub Doc Type

BL

Number LG Docs

0004

Permit Key

776278

Street #

2445

Street Dir

Doc Type

PL

Trade

B

Suite

Street Name

FONTAINE

Street Type

RD

Tract Number

Document Date

7/8/99

	Prepped By	Scanned By	Indexed By	Verified By
Initials	Shelley F	Natalya		
Date	10/19/01	10.22.01		

FONTAINE ROAD

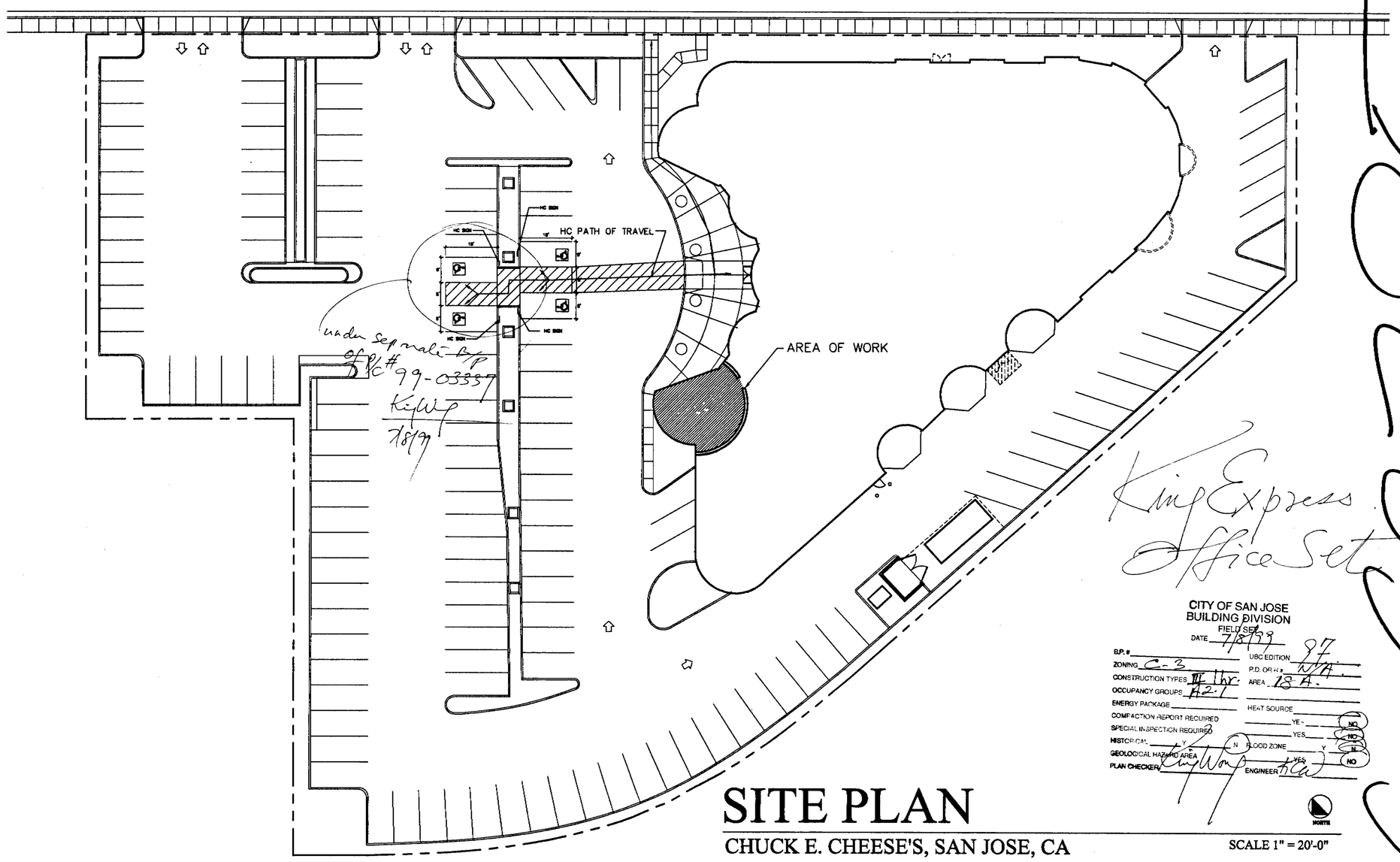

under separate B/P of P/C # 99-03337
KeyWong
7/8/99

King Express Office Set

CITY OF SAN JOSE
BUILDING DIVISION
FIELD SET
DATE 7/8/99
B.P. #
ZONING C-3
CONSTRUCTION TYPES III 1hr.
OCCUPANCY GROUPS A2.1
ENERGY PACKAGE
COMPACTION REPORT REQUIRED
SPECIAL INSPECTION REQUIRED
HISTORICAL
GEOLOGICAL HAZARD AREA
PLAN CHECKER
UBC EDITION 97
P.D. OR H.# N/A
AREA 18 A.
HEAT SOURCE
YES NO
FLOOD ZONE
ENGINEER

SITE PLAN

CHUCK E. CHEESE'S, SAN JOSE, CA

SCALE 1" = 20'-0"

PROJECT DATA

BUILDING ADDRESS:	2445 FONTAINE ROAD SAN JOSE, CALIFORNIA 95121
BUILDING OWNER:	MCA & ASSOCIATES 2445 FONTAINE ROAD SAN JOSE, CALIFORNIA 95121
TOTAL SPACE:	29,000 S.F.
USAGE:	RESTAURANT
OCCUPANCY:	A-2.1
OCCUPANT LOAD:	310 (UPSTAIRS) + 655 (DOWNSTAIRS) = 965 TOTAL
CONSTRUCTION:	TYPE V-1HR - SPRINKLERED
PARKING SPACES:	TOTAL: 140 HANDICAP: 5

PROJECT DESCRIPTION

1. UPGRADE EXISTING M & W BATHROOMS TO MEET CURRENT UBC (1994 EDITION).
2. ADD TWO MORE TOILETS W/STALLS, AND ONE MORE SINK TO WOMEN'S BATHROOM.
3. ADD ONE MORE TOILET W/STALL, ONE MORE URINAL, AND ONE MORE SINK TO MEN'S BATHROOM.
4. REVISE LAYOUT OF WOMEN'S AND MEN'S BATHROOMS. (SEE A-1)
5. RAISE (E) CEILING HT. TO MIN. 8'-6" ,BUT NOT TO EXCEED 9'-0".

SHEET INDEX

A-0 TITLE SHEET / SITE PLAN
A-1 FLOOR PLAN, CEILING PLAN
A-2.0 DETAILS
A-2.1 DETAILS

1.

RESTROOM REMODEL PLANS

BSB
BARRY SWENSON BUILDER
ARCHITECTURAL
A DIVISION OF GREEN VALLEY CORP.
701 NORTH FIRST STREET
SAN JOSE CA, 95112
TEL: (408) 287-0246
FAX: (408) 998-1737

Consultant:

Revisions:

COPYRIGHT © 1999
BARRY SWENSON BUILDER
ARCHITECTURAL

CHUCK E. CHEESE'S
2445 FONTAINE ROAD, SAN JOSE, CA 95121

TITLE PAGE / SITE PLAN

LICENSED ARCHITECT
STATE OF CALIFORNIA

Date: 10 JUNE 1999
Scale: 1" = 30'-0"
Drawn by: L. DESANTIS
Job #: 959-70-301
Sheet A-0

P:\JOB\959-300\301\Dwgs\ExpPlanCk\A-0.dwg Wed Jun 30 16:23:34 1999 LAWRENCE

SYMBOLS

- (S) = SPRINKLER
- = RECESSED FLOURESCENT "CAN" LIGHT
- (SPK) = SPEAKER/P.A. SYSTEM
- = HVAC REGISTER
- = 2'X4' RECESSED FLOURESCENT LIGHT FIXTURE

WALL LEGEND

= NEW WALL W/HT. TO MATCH ADJACENT WALL.

NOTES:

1	NEW INFANT CHANGING STATIONS WITH MAXIMUM 36" HT.. SIMILAR DEPTH AND WIDTH AS EXISTING.
2	EXTEND WALL W/MIN. 44" ENTRY CLEARANCE.
3	REMOVE EXISTING WALL AND DOOR.
4	REMOVE EXISTING DIVIDING WALL, SINK & COUNTER-TOP AND RELOCATE W/ADDITIONAL SINK AS SHOWN.
5	NEW 12" GYP. BD. SOFFIT @ 8'-0" A.F.F. (SEE DETAIL 13/A-2)
6	HC BATHROOM SIGNAGE. (SEE DETAIL 7/A-2)

GENERAL NOTES:

1. RELOCATE AND REMOVE EXISTING LIGHT FIXTURES AS REQUIRED. PROVIDE NEW OR RELOCATED T-BAR TILES TO MATCH (E) AS REQUIRED. (SEE DETAIL 11/A-2)
1. ALL WORK SHALL CONFORM TO 1994 UBC A AMMENDED BY THE CITY OF SAN JOSE, CALIFORNIA.

RESTROOM ACCESSORIES

MARK	MANUFACTURER	DESCRIPTION	FURNISHED BY	INSTALLED BY
A		SIMILAR TO (E) CHANGING TABLE SEE FLOOR & ELEVATION PLANS	G.C.	G.C.
B	BRADLEY 8120-001420	42" HANDICAP GRAB BARS	G.C.	G.C.
C		TISSUE DISPENER SINGLE STALL	OWNER	G.C.
D	BRADLEY	WASTE RECEPTACLE/ROLL TOWEL DISPENSER SURFACE MOUNTED	G.C.	G.C.
E		SOAP DISPENSER MOUNTED BETWEEN MIRRORS	OWNER	G.C.
F	BRADLEY	WASTE RECEPTACLE FOR BABY CHANGE SURFACE MOUNTED	G.C.	G.C.
G	BRADLEY #4781-15	NAPKIN DISPOSAL BOXES CONTRACTOR SHALL INSTALL ONE NAPKIN DISPOSAL BOX IN EACH STALL OF THE WOMEN'S RESTROOM 118	G.C.	G.C.
H	BRADLEY #740-1830	(18" X 30") STAINLESS STEEL ANGLED FRAMED MIRROR	G.C.	G.C.
J	BROCAR	PIPE SAFETY COVERS	G.C.	G.C.
K	BRADLEY #8120-00136	36" HANDICAP GRAB BARS	G.C.	G.C.

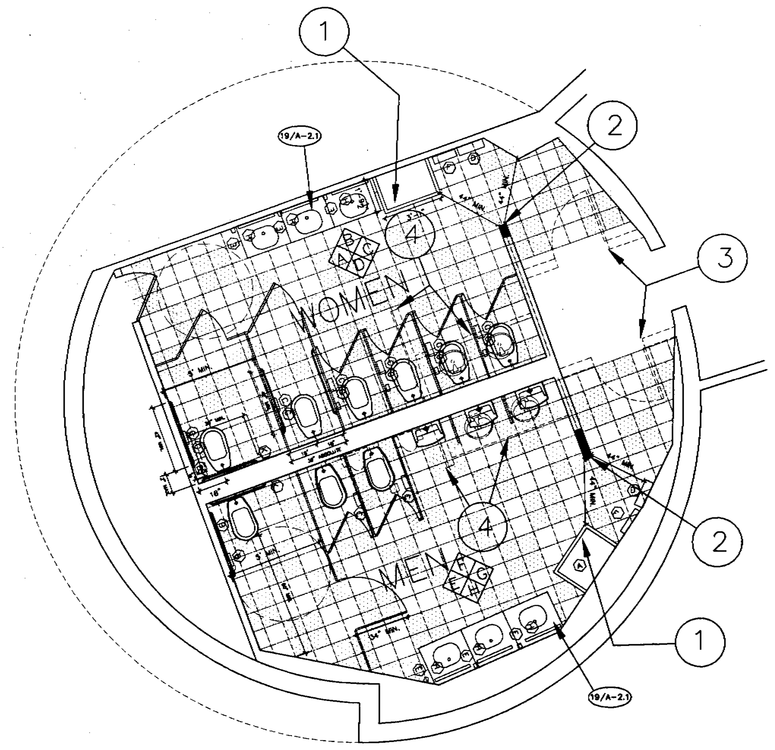

REVISED BATHROOM FLOORPLAN

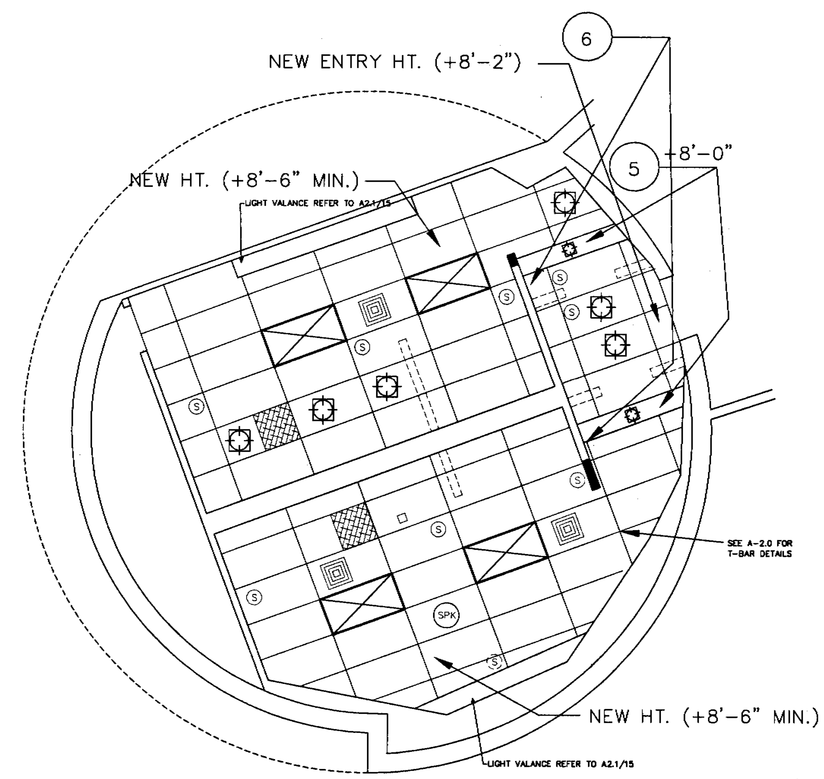

NORTH

REFLECTED CEILING PLAN

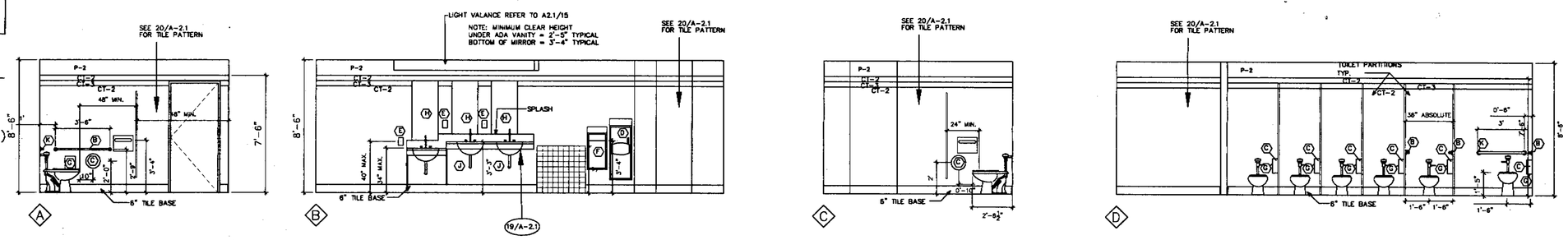

WOMEN'S RESTROOM ELEVATION

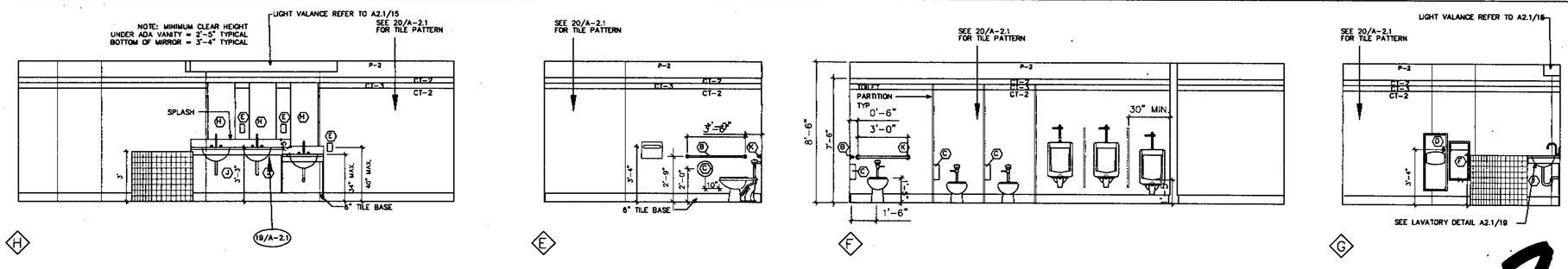

MEN'S RESTROOM ELEVATION

99962735

2.

P:\JOB\959-301\301\Dwgs\ElnpPlanCk\A-1.dwg Thu Jul 01 08:16:47 1999 LAWRENCE

BARRY SWENSON BUILDER
ARCHITECTURAL
A DIVISION OF GREEN VALLEY CORP.
701 NORTH FIRST STREET
SAN JOSE CA. 95112
TEL: (408) 287-0246
FAX: (408) 998-1737

Consultant:

Revisions:

COPYRIGHT © 1999
BARRY SWENSON BUILDER
ARCHITECTURAL

CHUCK E. CHEESE'S

2445 FONTAINE ROAD, SAN JOSE, CA

FLOOR PLAN, CEILING PLAN & ELEVATIONS

LICENSED ARCHITECT STATE OF CALIFORNIA

Date: 30 JUNE 1999
Scale: 1/4" = 1'-0"
Drawn by: L. DESANTIS
Job #: 959-70-301
Sheet: A-1

FINISH KEY

03300 CONCRETE

E — EXPOSED CONCRETE - SEALED

05720 ORNAMENTAL METAL — LAVI INDUSTRIES, INC.

- BR-1 FLUSH END POST, 2", CLEAR COAT BRASS
- BR-2 FLUSH CENTER POST, 2", CLEAR COAT BRASS
- BR-3 2" x 4" WALL FLANGE, CLEAR COAT BRASS
- BR-4 2" DIAMETER TUBING, WRINKLE BLACK
- BR-5 2" DIAMETER TUBING, UNFINISHED OAK
- BR-6 FLUSH END CAP FOR WOOD, CLEAR COAT BRASS
- BR-7 REGAL REMOVABLE POST, WRINKLE BLACK POST WITH BRASS CROWN AND BASE
- BR-8 VELOUR COVERED ROPE, CARDINAL WITH CHAIN CORE. INCLUDES BRASS ROPE SNAP HOOK (#00-930) FOR EACH SECTION
- BR-9 WALL PLATE, BRASS

06410 PLASTIC LAMINATE

LP-1 WILSONART "HOLLYBERRY" RED GRID D-307-76

06410 SOLID SURFACING

SS-1 WILSONART "GIBRALTER" 1572-SL ANTIQUE WHITE

09260 GYPSUM DRYWALL

- GP-1 TO PAINT (refer to Painting for texture)
- GP-2 NOT USED

09311 CERAMIC TILE

CT-1
TYPE: FLOOR TILE
SIZE: 12" x 12" LAID IN 24" x 24" PATTERN AS SHOWN
TILES: CROSSVILLE #A215 EMPRESS WHITE CP2 and #A850 GRAPHITE CP1
BASE: 6" HIGH GROVE - GRAPHITE
GROUT: MFGR. CUSTOM BUILDING PRODUCTS "WINTER GREY"

CT-2
TYPE: WALL TILE
SIZE: 4 1/4" x 4 1/4"
TILES: UNITED STATES CERAMICS TILE U078 ALMOND
GROUT: MFGR. CUSTOM BUILDING PRODUCTS "SAIL WHITE"

CT-3
TYPE: WALL TILE ACCENT BAND
SIZE: 4 1/4" x 4 1/4"
TILES: UNITED STATES CERAMICS TILE U733 RED
GROUT: MFGR. CUSTOM BUILDING PRODUCTS "SAIL WHITE"

09330 QUARRY TILE

- QT-1 6" X 6" QUARRY TILE
  FINISH: AMERICAN OLEAN "CANYON RED" ABR. SURFACE W/ BLACK GROUT
- QT-2 6" X 6" QUARRY TILE
  FINISH: AMERICAN OLEAN "CANYON RED" DBL. ABR. SURFACE W/ BLACK GROUT

09610 ACOUSTICAL LAY-IN CEILINGS

- LT-1 ARMSTRONG #1761HA, FINE FISSURED SECOND LOOK II 24" x 48" x 3/4" WITH XL HA 15/16" EXPOSED TEE SYSTEM
- LT-2 ARMSTRONG #670 VINYL FACED CLIP 24" x 48" x 1/2" WITH PRELUDE XL WHITE GRID
- LT-3 LT-2 PAINT TO MATCH LT-1
  GRID TO MATCH CEILING TILE COLOR IN PUBLIC AREAS

09660 RESILIENT TILE

- VT-1 ARMSTRONG PREMIUM EXCELON TILE, 12" X 12" STONETEX PEBBLE GRAY
- VT-2 ARMSTRONG PREMIUM EXCELON TILE, 12" X 12" STONETEX #52144 COAL BLACK

09900 PAINT/STAINS

All products listed are available thru Sherwin Williams. National Account Manager Morris Buckland 214-657-918.

VERIFY ALL EXISTING COLORS PRIOR TO STARTING ANY WORK TO 214-821-9100.
ALL PRODUCTS LISTED SHALL COMPLY WITH STATE VOC GUIDELINES

P-1 Hollyberry Red — custom formula: used on exposed metal columns and older non-prefinished front doors (not for new powder-coat finish entrance doors).
PRIMER KROMIK metal primer
PAINT Base: Industrial Enamel Safety Red B54R38
B54R38-Hollyberry Red-IndEnamel-Safety Red Base, Base Colorant, OY-40, QR-32, TW-16
Note: On older remodeled stores some interior doors also use this color in those cases, prep for re-paint with scuff sand (2 coats)

P-2 Lightmove SW-1063 — used on upper walls, fire exit doors and frames.
TEXTURE Drywall Texture medium orange peel (verify/approval)
PRIMER Drywall Primer Prolider 200 latex primer B30W200 (1 coat)
PAINT Drywall Paint Prolider 200 latex semi-gloss enamel B31W200 (2 coats)
Note: On fire exit doors and frames
Paint DTM acrylic coating B66-2003
(only in cases of rust or slick surface scuff sand and use KROMIK universal primer)

P-3 Windsor Gray SW1040 — used on interior door frames
PAINT DTM acrylic coating B66-2002 (scuff sand and primer only as required)

P-4 Oyster Shell — exterior custom color matching drywall specification
PRIMER Loxon A24W300
PAINT formula base A-100 (satin/2 coats minimum)
DTM B66 W201-Oyster Shell same for A-100, Y3-9+01, R2+11, B1+1 on metals and flashing use KROMIK primer & DTM paint.

P-5 Morning Haze — custom match to marble of same name used only on remodels not for new construction.
PRIMER XM primer (1 coat)
PAINT formula base B34W200 alkyd enamel (semi gloss),
B31W201-Morning Haze, B1-36+1, Y3-22+1, R2-7, WH-5

P-6 Pancake — exterior custom color matching drywall specification
PRIMER Loxon A24W300
PAINT formula base A-100 (satin/2 coats)
DTM B66 W201-Pancake-Same for A-100, Y3-28,R2-4,B1-1

P-7 Haze — custom match to Armstrong, ceiling grid and tile of same name.
(Used on remodels only, not for new construction)
PAINT B30 W 401, N1-27, P1-4

P-8 Stones Throw — used on ceiling of Studio "C" show (new construction)
PAINT Prolider 200 Interior latex flat paint (B30 W 200)

P-9 Flat Black — used on backwall or animated show
PAINT Prolider 400 flat latex (2 coats)

ST1 Interior oak (low wall caps and window sills)
1ST COAT Sherwin Williams wood wiping stain (white wash) S64 W11 White
2ND COAT Sherwin Williams wood vinyl sealer T87 F3
3RD COAT Sherwood oak acrylic T75 C15
4TH COAT same as third coat

ST2 Interior oak (marble chair rail cap and misc.)
1ST COAT Sherwin Williams wood wiping stain (cherry) S64 R8 cherry with 4 oz. maroon oxide
2ND COAT Sherwin Williams wood vinyl sealer T87 F3
3RD COAT Sherwood oak acrylic T75 C15
4TH COAT same as third coat

ST3 Interior oak (low wall caps, window stills and trim to match existing medium oak finish) (for remodels only)
1ST COAT A48V200 Pearwood stain (medium oak) Y3-36, R2-2Y,Y1-16,W1-4Y16,G1-8
(finish coats same as above)

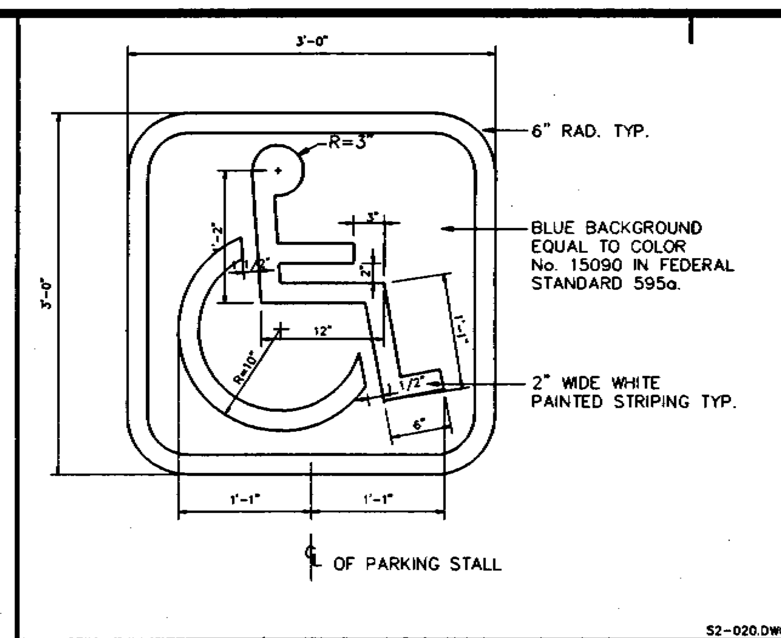

1 HANDICAP SIGNAGE

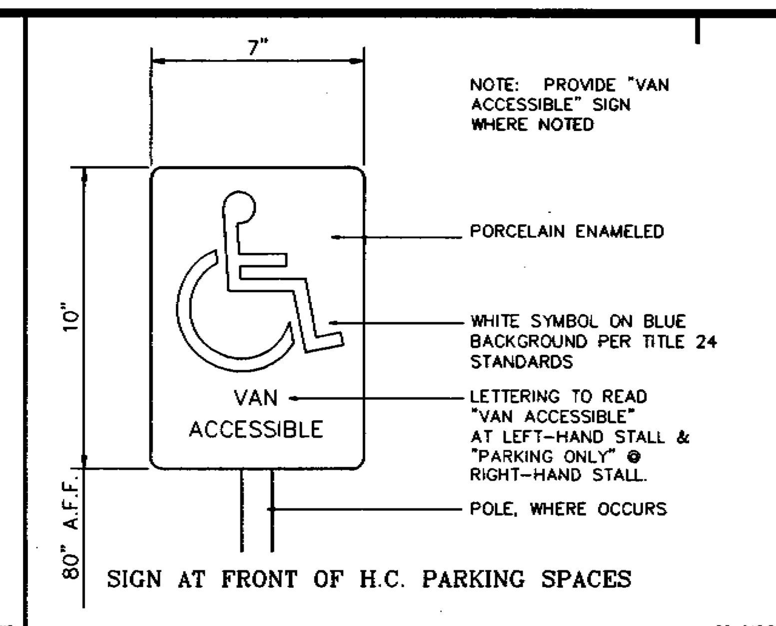

2 HANDICAP PARKING SIGN

3

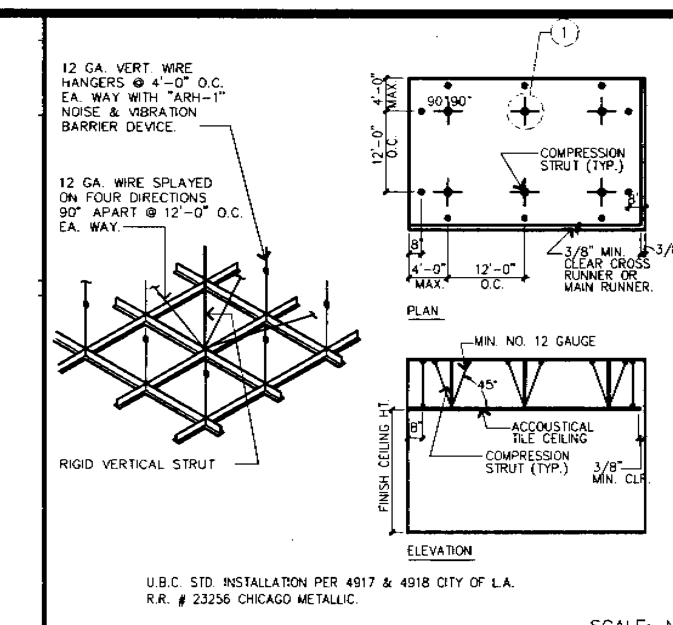

4 CLG. GRID SUSPENSION SYSTEM

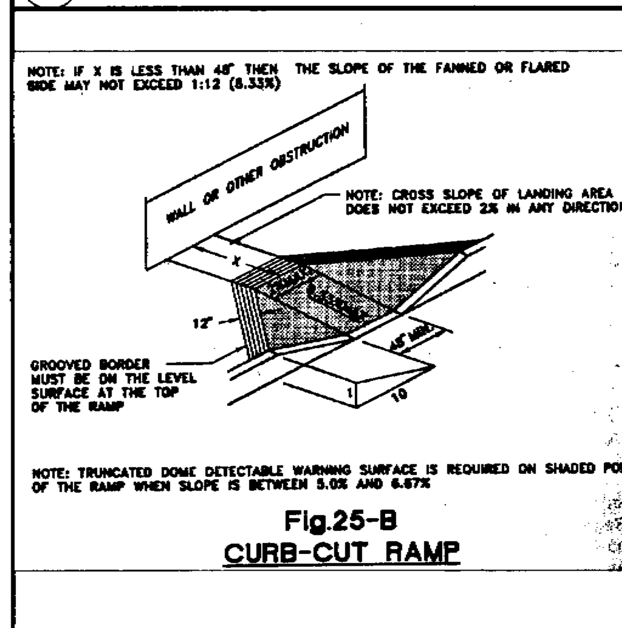

5 CURB-CUT DETAIL

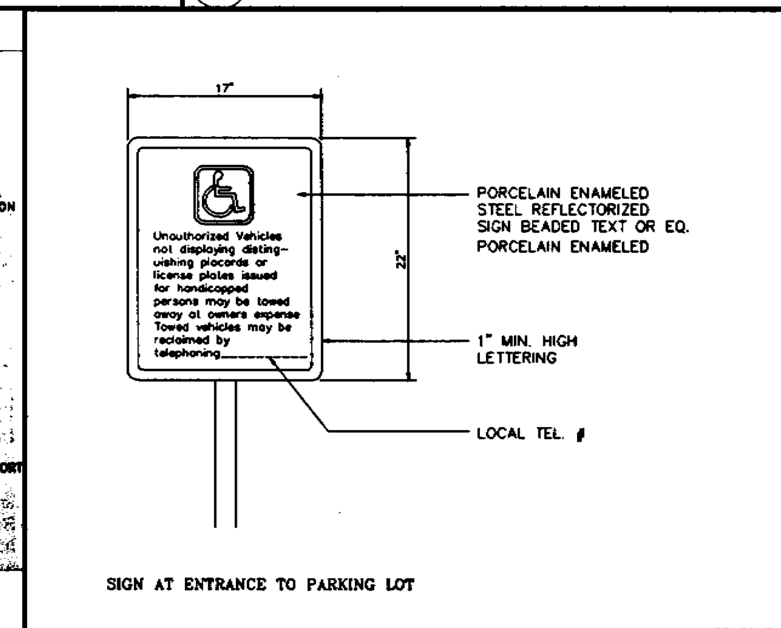

6 HANDICAP SIGNAGE

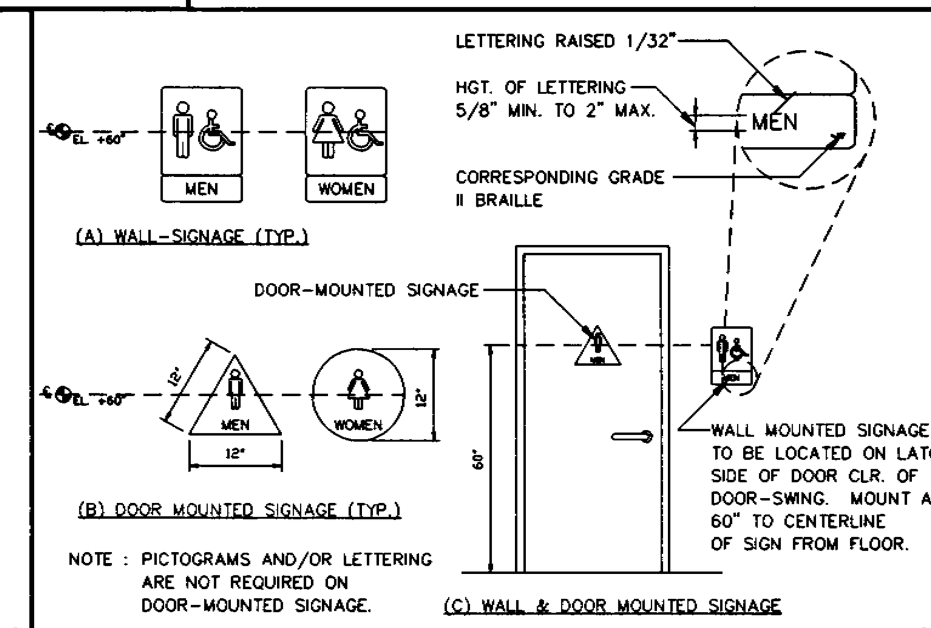

7 TYP. TOILET ROOM SIGN

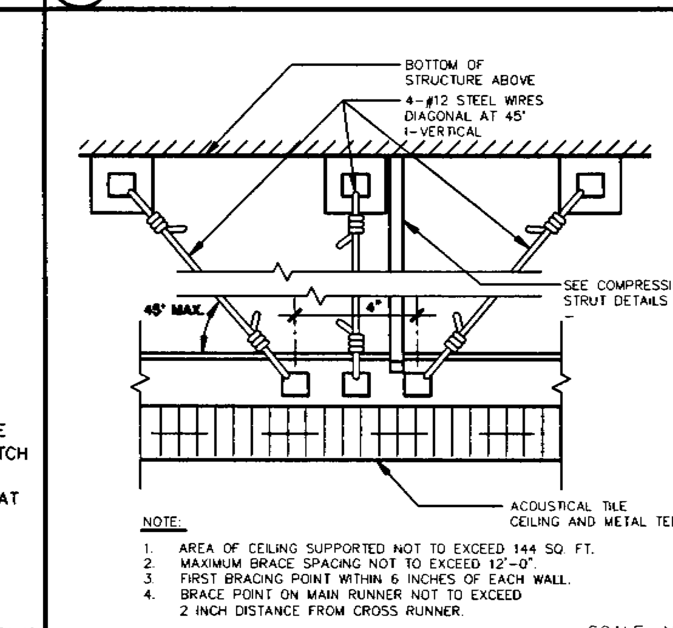

8 CEILING BRACING DETAIL

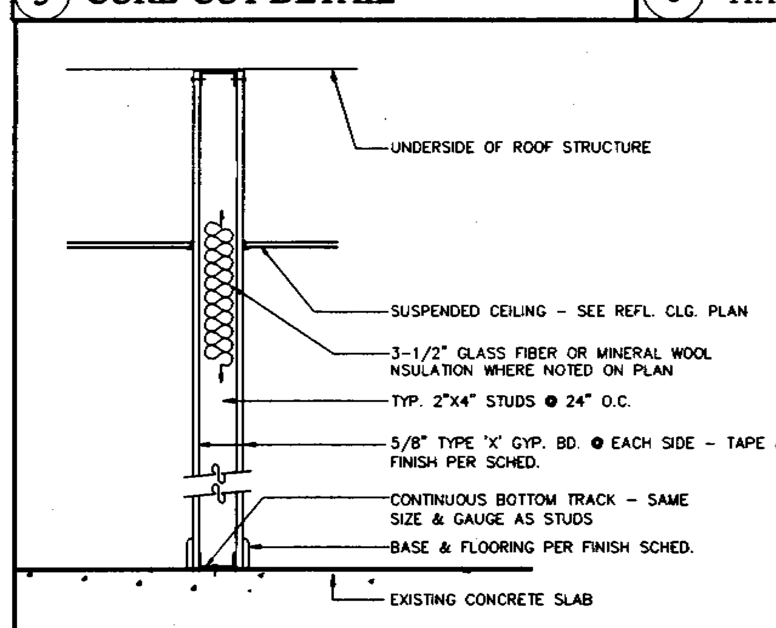

9 WALL DETAIL

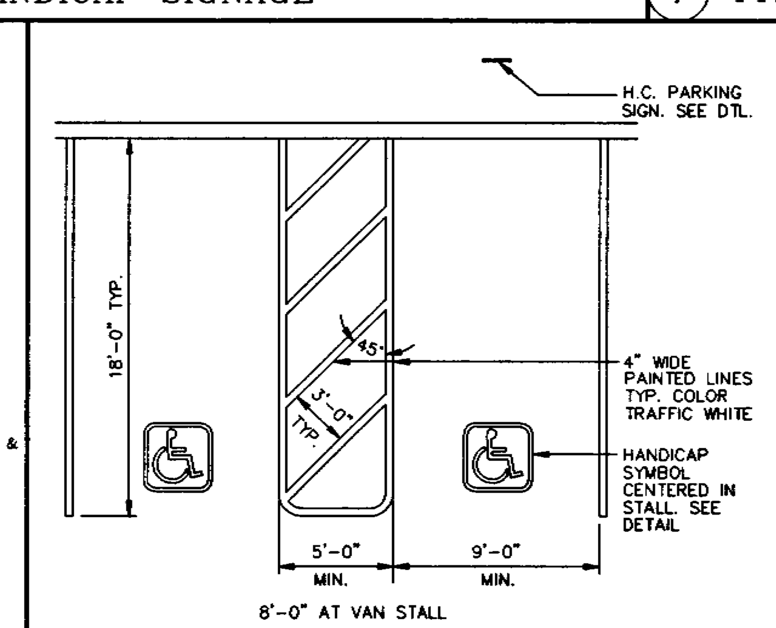

10 HANDICAP PARKING STALLS

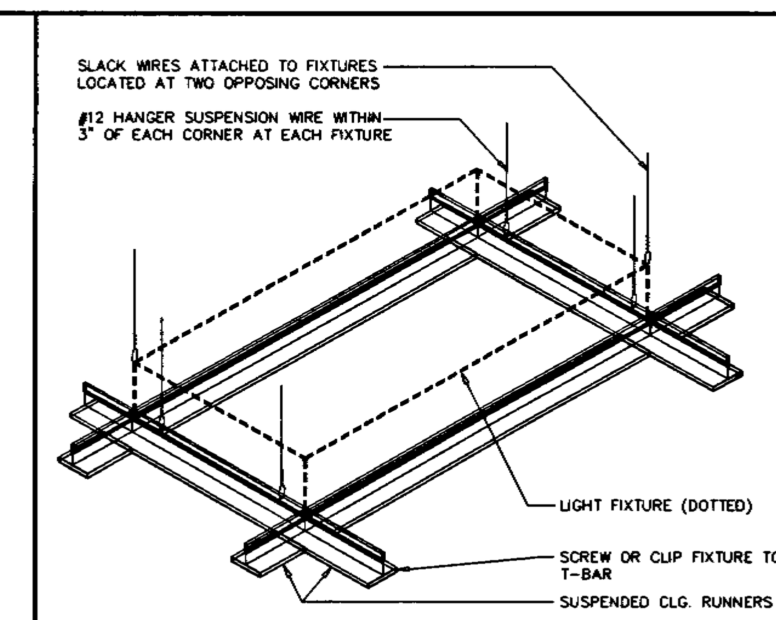

11 CEILING LIGHT FIXTURE DETAIL

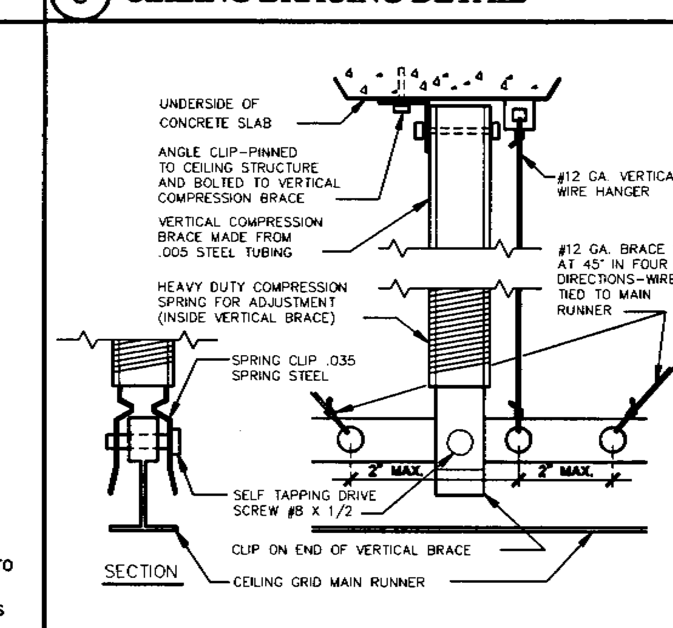

12 COMPRESSION STRUT DETAILS

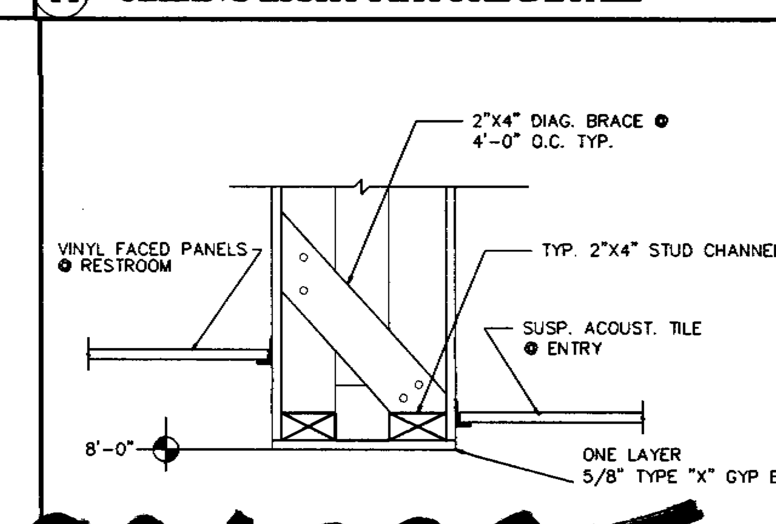

9962735

13 TYP. SOFFIT SECTION

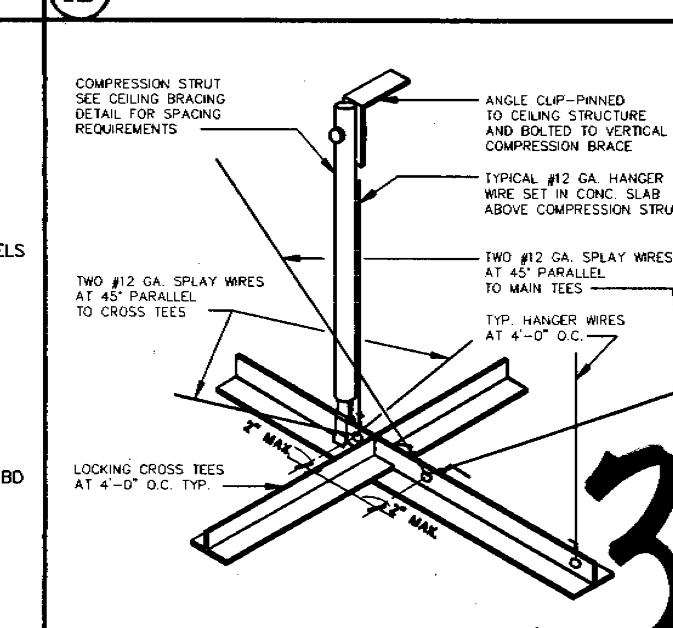

3

14 WIRE BRACING AND STRUT DETAIL

BSB
BARRY SWENSON BUILDER
ARCHITECTURAL
A DIVISION OF GREEN VALLEY CORP.
701 NORTH FIRST STREET
SAN JOSE CA, 95112
TEL: (408) 287-0246
FAX: (408) 998-1737

Consultant:

Revisions:

COPYRIGHT © 1999
BARRY SWENSON BUILDER
ARCHITECTURAL

CHUCK E. CHEESE'S

2445 FONTAINE ROAD, SAN JOSE, CA

DETAILS

LICENSED ARCHITECT — STATE OF CALIFORNIA

Date: 10 JUNE 1999
Scale: AS SHOWN
Drawn by: L. DESANTIS
Job #: 959-70-301
Sheet: A-2.0

FIXTURES

DESIGNATION	FIXTURE TYPE	MANUFACTURER & MODEL NUMBER	SERVICE CONNECTIONS WASTE	VENT	COLD WATER	HOT WATER	DESCRIPTION/REMARKS/SPECIAL INSTRUCTIONS
P-1	WATER CLOSET	AMERICAN STD FAUCHER 2234.016	4	2	1	–	FLOOR MOUNTED SIPHON JET ELONGATED BOWL WITH CLOSEMITE SEATS SEAT NO. 19 WITH INTEGRAL CHECK SINGLE FLUSH VALVE 1.6 GALLON PER FLUSH. 10 IN ROUGH-IN
P-1A	WATER CLOSET	AMERICAN STD CADET 2048.102	4	2	1	–	FLOOR MOUNTED SIPHON JET ELONGATED BOWL WITH CLOSEMITE SEATS SEAT NO. 19 WITH INTEGRAL CHECK SINGLE FLUSH VALVE 1.6 GALLON PER FLUSH. INSTALL AT HANDICAP HEIGHT
P-2	WALL HUNG URINAL	AMERICAN STD TRIMBACK 6661.017	2	1 1/2	3/4	–	WALL HUNG VITREOUS CHINA, SIPHON JET URINAL COMPLETE WITH BLOWN ROYAL FOR FLUSH, AND 29, SMITH CARRIER, 1.0 GALLON PER FLUSH. INSTALL AT HANDICAPPED HEIGHT AND REGULAR HEIGHT
P-3	LAV	OVALYN II	1 1/2	1 1/2	1/2	1/2	UNDER COUNTER, VITREOUS CHINA, 20 IN. BY 17 IN. LAV BLACK WANDER, 402-1/2 ARIO DRAIN, WITH 2 IN. HONEY P-TRAP, CHROME PLATED BRASS, 1/4 TURN SUPPLIES AND STOPS, 1 1/4 IN P-TRAP, HANDICAP ACCESSIBLE
HB	MOP SINK TYPE 'A'	FIAT 198-24FMS/MOP	3"	2"	3/4"	3/4"	PRE-CAST MOLDED STONE MOP BASIN W/ INTERNAL DRAIN & COMPLETE W/ FIAT WALL BRACKET MODEL# MOP-WMB-SHO-SQ FLAT SQUARE SHOWER HANDLES, 3/4" HOSE THREADS, SCT-1-AA SPOUTLESS FAUCET MC-0261 W/ INTERNAL STOPS & VAC BREAK
FD	FLR DRAIN	J.R SMITH 4020-A	AS NOTED ON DRAWINGS				CAST IRON FLOOR DRAIN COMPLETE W/ BATH NICKEL STRAINER & DEEP SEAL TRAP, TRAP PRIMER TAP WHERE REQD
FS	FLOOR SINK	J.R SMITH 19-0610	AS NOTED ON DRAWINGS				12"X12"X6"DEEP CAST IRON FLOOR SINK & ALUMINUM SEDIMENT BUCKET COMPLETE W/ HALF GRATE SET FLUSH IN FLOOR
MFHB	MF WALL HYDRANT	J.R SMITH. #5768BST-84-WC	—	—	3/4"	—	RECESS WALL HYDRANT W/ CHROME PLATED FACE, INTEGRAL VAC BRKR, LOCKING DOOR, LOOSE KEY & 3/4" HOSE CONN, NON-FREEZE
VR-1	VTR WTR SUB FREEZ	VOLANTE SD7109-SS					REFER TO DETAIL ON THIS SHEET FOR REQUIREMENTS
VR-2	VTR WTR ELEC	LOCKWOOD SCL.SD0HI					120V, 3KW STORY ELECTRIC WATER HEATER RATED AT 39 GAL. 98 GPH RECOVERY AT 88 DEGREE RISE

NOTES: 1 ALL SUBSTITUTIONS SHALL BE APPROVED BY ARCHITECT PRIOR TO ORDERING.

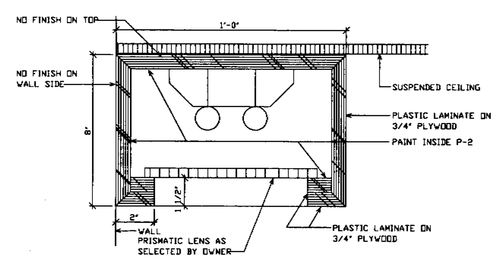

15 LIGHT VALANCE-OWNER PROVIDED

SCALE : 3" = 1'-0"

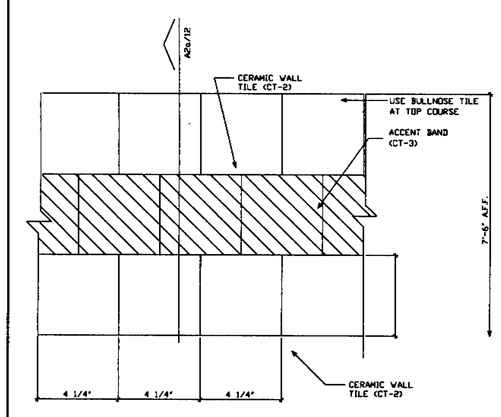

16 RR. TILE CHECKS

SCALE: 3" = 1'-0"

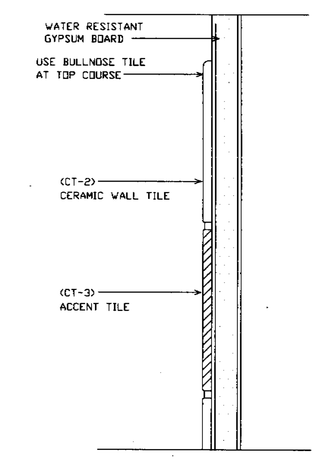

17 TILE DETAIL AT RESTROOM

SCALE : 6" = 1'-0"

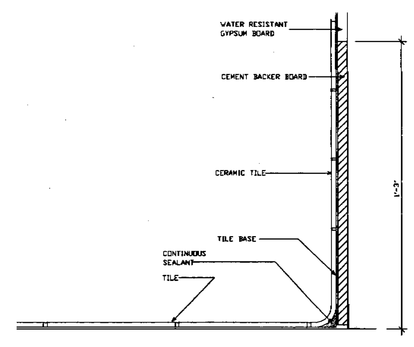

18 CERAMIC TILE COVE BASE DETAIL

SCALE : 3" = 1'-0"

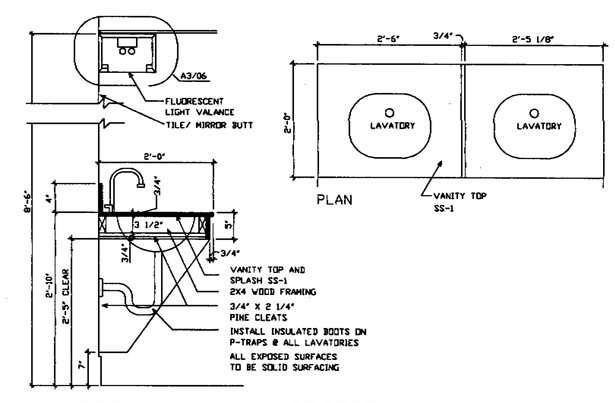

19 LAVATORY COUNTER SECTION

SCALE: 3/4" = 1'-0"

9962735

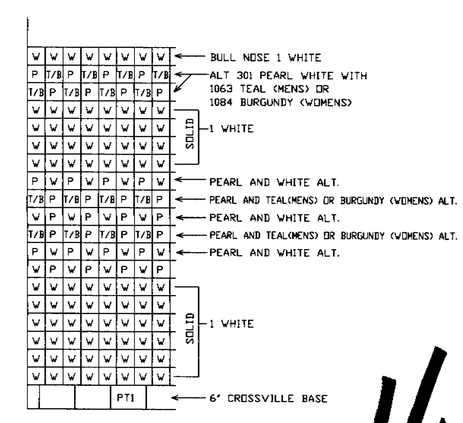

CERAMIC TILE

FLORIDA TILE: 4 3/8 x 4 3/8

W = 1 WHITE (BRIGHT GLAZE)

P = 301 PEARL WHITE (BRIGHT GLAZE)

T = 1063 TEAL (CONFETTI)

B = 1084 BURGUNDY (CONFETTI)

WALL GROUT MONARCH 10 ANTIQUE WHITE

4.

20

P:\JOB\959-300\301\Dwgs\ExpPlanCk\A-2.1.dwg Wed Jun 30 15:32:56 1999 LAWRENCE

BARRY SWENSON BUILDER
ARCHITECTURAL
A DIVISION OF GREEN VALLEY CORP.

701 NORTH FIRST STREET
SAN JOSE, CA. 95112
TEL: (408) 287-0246
FAX: (408) 998-1737

Consultant:

Revisions:

COPYRIGHT © 1999
BARRY SWENSON BUILDER
ARCHITECTURAL

CHUCK E. CHEESE'S

2445 FONTAINE ROAD, SAN JOSE, CA

DETAILS

LICENSED ARCHITECT STATE OF CALIFORNIA

Date: 30 JUNE 1999
Scale: AS SHOWN
Drawn by: L. DESANTIS
Job #: 959-70-301
Sheet: A-2.1