City of San Jose - Building Division - Index Cover

Address 2445 Fontaine Rd ME1

PLAN CHECK NO. _____ **PERMIT NO.** BE0204 5049

Prepared By RB **Date** 6/5/02

Category	Document Type	Sub Document Type
☐ MP Tracts	☐ TB Planning Permit	
	☐ PP Plot Plans	
	☐ TP Tract Plans	☐ PN Planning ☐ BD Building ☐ PB Plumbing ☐ MM Mechanical ☐ EE Electrical
	☐ TD Supporting Documents	
	☐ TC Structural Calculations	
	☐ TS Soils Report	
	☐ TT Trusses/Shop Drawings	
	☐ TM Tract Map	☐ AR Addressed
☑ PL Plans	☐ PI Planing Permit	
	☑ EP Plans	☐ PA Planning ☑ BL Building ☐ BP Plumbing ☐ BM Mechanical ☐ BE Electrical
	☐ PM Parcel Map	
	☐ SC Structural Calculations	
	☐ SD Supporting Documents	
	☐ SR Soils Report	
	☐ TR Trusses/Shop Drawing	
	☐ CR Copy Request	
☐ PT Permits	☐ AD Addressing	
	☐ IN Inspection Notices	☐ EP Expired
	☐ PR Permits & Applications	☐ CC Cash Receipts / Refunds ☐ CO C of O ☐ CP Correspondence ☐ EX Expired / Voided ☐ FI Finals ☐ IN Initial ☐ IS Initial – Supporting Doc's ☐ MR Meter Releases ☐ SI Special Inspection Reports
	☐ CF Compliance Files	☐ CN Compliance Notices ☐ RS Rescind ☐ SW Stop Work Orders
	☐ DR Damage Reports	☐ ED Earthquake Damage ☐ FD Flood Damage ☐ FA Fire/Auto Survey

Rev. 4/30/02

MetroPCS Inc.

CHUCK E. CHEESE

Office Set

SFA-C08-142-B

2445 FONTAINE ROAD
SAN JOSE, CA 95121

TYPE OF EQUIPMENT: CDMA-MODCELL
SITE TYPE: T.I. / ANTENNA ON ROOF
RAD CENTER: 38'-0"
LONGITUDE: 121- 49 - 46
LATITUDE: 37 - 19 - 8

CITY OF SAN JOSE BUILDING DIVISION
APPROVED PLAN SET
☑ OFFICE SET ☐ FIELD SET
ADDRESS 2445 Fontaine Rd.
PERMIT No. 02-045049 DATE 4/15/02
P.C. No. 02-042132 DATE 5/21/02
CODE: EDITIONS: UBC UPC UMC 97 NEC ENERGY DA
OCCUPANCY GROUP(S) TYPE OF CONSTRUCTION
PLANS APPROVED FOR: CHECKED BY APPROVED BY
( ) BUILDING NON STRUCT Daniel Lee
( ) BUILDING STRUCT KB 5/24
( ) ELECTRICAL
(✓) PLUMBING
( ) MECHANICAL
( ) FIRE
( ) ZONING PLANNING PERMIT #
COMMENTS

MetroPCS Inc.
1080 MARINA VILLAGE PARKWAY
FOURTH FLOOR
ALAMEDA, CA 94501
Phone: (510) 523-2610

DCI PACIFIC
ARCHITECTURE - ENGINEERING - PLANNING
5700 STONERIDGE MALL ROAD, #270
PLEASANTON, CA 94588
TEL: 925-730-4000 FAX: 925-730-4001

A&E PROJECT #SFA-C08-142-B

ALL DRAWINGS AND WRITTEN MATERIAL CONTAINED HEREIN ARE THE PROPERTY OF ARCHITECT AND MAY NOT BE DUPLICATED, USED OR DISCLOSED WITHOUT THE WRITTEN CONSENT OF ARCHITECT.

SPACE RESERVED FOR PROFESSIONAL SEALS

LICENSED ARCHITECT — CALIFORNIA

A/C	AIR CONDITIONING
ADJ	ADJUSTABLE
AFF	ABOVE FINISH FLOOR
APPROX	APPROXIMATELY
ASTM	AMERICAN SOCIETY FOR TESTING AND MATERIALS
AWG	AMERICAN WIRE GAUGE
BLDG	BUILDING
BLK	BLOCK
BMR	BASE MOBILE RADIO
B/S	BUILDING STANDARD
CLG	CEILING
CLR	CLEAR
CND	CONDUIT
CONC	CONCRETE
CONST	CONSTRUCTION
CONT	CONTINUOUS
DBL	DOUBLE
DIA, ø	DIAMETER
DIAG	DIAGONAL
DIM	DIMENSION
DN	DOWN
DTL,DETL	DETAIL
DWG	DRAWING
E	EAST
EA	EACH
EL,ELEV	ELEVATION
ELECT	ELECTRICAL
EQ	EQUAL
EQUIP	EQUIPMENT
EW	EACH WAY
EXIST	EXISTING
EXT	EXTERIOR
FIN	FINISH
FLUOR	FLUORESCENT
FLR	FLOOR
FT	FOOT
GA	GAUGE
GALV	GALVANIZE(D)
GC	GENERAL CONTRACTOR
GRND	GROUND
GWB	GYPSUM WALL BOARD
GYP BD	GYPSUM BOARD
HARD'WD	HARDWOOD
HORIZ	HORIZONTAL
HR	HOUR
HT	HEIGHT
HVAC	HEATING, VENTING & AIR CONDITIONING
ID	INSIDE DIA.
IN	INCH
INFO	INFORMATION
INSUL.	INSULATION
INT	INTERIOR
LB(S)	POUND(S)
MAX	MAXIMUM
MECH	MECHANICAL
MET,MTL	METAL
MFR	MANUFACTURER

MGR	MANAGER
MIN	MINIMUM
MISC	MISCELLANEOUS
N	NORTH
NA	NOT APPLICABLE
NIC	NOT IN CONTRACT
NTS	NOT TO SCALE
OC,o/c	ON CENTER
OD	OUTSIDE DIAMETER
OPG	OPENING
OPP	OPPOSITE
PLYWD	PLYWOOD
PR	PAIR
PROJ	PROJECT
PROP	PROPERTY
PT	PRESSURE TREATED
REQ'D	REQUIRED
RM	ROOM
RO	ROUGH OPENING
S	SOUTH
SHT	SHEET
SIM	SIMILAR
SPEC	SPECIFICATION
SQ	SQUARE
SS	STAINLESS STEEL
STL	STEEL
STRUCT	STRUCTURAL
SUSP	SUSPENDED
SV	SHEET VINYL
THRU	THROUGH
TNND	TINNED
TOC	TOP OF CONCRETE
TOM	TOP OF MASONRY
TYP	TYPICAL
UBC	UNIFORM BUILDING CODE
UNO	UNLESS NOTED OTHERWISE
VERT	VERTICAL
VIF	VERIFY IN FIELD
VT	VINYL TILE
W	WEST
W/	WITH
WIN	WINDOW
W/O	WITHOUT
WP	WATERPROOF
∡	ANGLE
&	AND
℄	CENTER LINE
ℙ	PROPERTY LINE
@	AT
#	NUMBER

1 REVISION — 1 DETAIL REFERENCE
1 KEY NOTE — 1 ELEVATION REFERENCE
100 ROOM NUMBER — 1 SECTION REFERENCE
22 KEYED NOTE

SYMBOLS AND ABBV.

ARCHITECT:

DCI PACIFIC
5700 STONERIDGE MALL ROAD, #270
PLEASANTON, CA 94588
CONTACT: D.K. DO E-MAIL: DCIPACIFIC3@AOL.COM
BOK YU E-MAIL: BOK@DCIPACIFIC.COM
PHONE: (925) 730-4000 FAX: (925) 730-4001

SURVEYOR:

STRUCTURAL:

ELECTRICAL:

POWER:

COMPANY: PG&E PHN: .
CONTACT: LINDSAY LEWIS FAX: .
E-MAIL: .

TELCO:

COMPANY: PACBELL PHN: .
CONTACT: . FAX: .
E-MAIL: .

CONSULTANT TEAM

LANDLORD/OWNER: _____
CONSTRUCTION MANAGER: _____
LEASING MANAGER: _____
PLANNER: _____
RF ENGINEER: _____
SIGNATURE DATE

APPROVALS

APPLICANT/LESSEE:

METROPCS INC. PHONE: (510) 523-2610
1080 MARINA VILLAGE PARKWAY FAX: (510) 748-1823
4TH FLOOR
ALAMEDA, CA. 94501
CONTACT: TOM MCAULIFFE, LEASING/ZONING COORDINATOR
PHONE: (510) 747-4663 FAX: (510) 748-1823
CONTACT: MOHAMMAD BASEER, CONSTRUCTION MANAGER
PHONE: (510) 747-4696 FAX: (510) 748-1823

PROPERTY INFORMATION:

OWNER: MCA & ASSOCIATES
ADDRESS: 2445 FONTAINE ROAD
SAN JOSE, CA 95121
CONTACT: .
PHONE: .
A.P.N.: .

PROJECT INFORMATION:

AREA OF CONSTRUCTION: EQUIP. LEASE AREA = 196.0 SQ. FT.
OCCUPANCY TYPE: TELECOMMUNICATIONS FACILITY
CONSTRUCTION TYPE: N/A
CURRENT ZONING: .
ACCESSIBILITY REQUIREMENTS: FACILITY IS UNMANNED AND NOT FOR HUMAN HABITATION. HANDICAPPED ACCESS NOT REQUIRED.

PROJECT SUMMARY

THIS PROJECT CONSISTS OF THE INSTALLATION AND OPERATION OF ANTENNAS AND ASSOCIATED EQUIPMENT FOR THE 'METROPCS' WIRELESS TELECOMMUNICATIONS NETWORK. A TOTAL OF ONE (1) 6.25"ø POLE WITH TWO (2) MICRO-ACCELLERATOR ANTENNAS INSIDE AND ONE (1) 6.25"ø POLE WITH ONE (1) MICRO-ACCELLERATOR ANTENNA INSIDE, LOCATED AT THE ROOFTOP WILL BE INSTALLED AT THIS SITE. THE EQUIPMENT WILL BE LOCATED ON A VACANT ROOM AT GROUND FLOOR LEVEL.

PROJECT DESCRIPTION

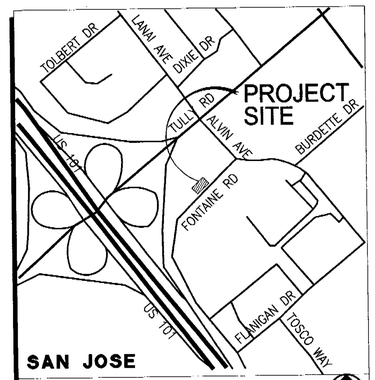

SAN JOSE
VICINITY MAP

FROM 1080 MARINA VILLAGE PARKWAY: TAKE THE I-880 SOUTH RAMP TOWARDS SAN JOSE. STAY STRAIGHT ONTO I-880S. TAKE THE US 101 SOUTH TOWARDS LOS ANGELES. TAKE THE TULLY ROAD EXIT. MERGE ONTO TULLY ROAD. TURN RIGHT ONTO ALVIN AVENUE THEN TURN RIGHT ONTO FONTAINE ROAD.

SITE DIRECTIONS

ALL WORK AND MATERIALS SHALL BE PERFORMED AND INSTALLED IN ACCORDANCE WITH THE CURRENT EDITIONS OF THE FOLLOWING CODES AS ADOPTED BY THE LOCAL GOVERNING AUTHORITIES. NOTHING IN THESE PLANS IS TO BE CONSTRUED TO PERMIT WORK NOT CONFORMING TO THESE CODES.

1. CALIFORNIA BUILDING CODE 1998
2. CALIFORNIA ADMINISTRATIVE CODE (INCL TITLES 24 & 25) 1997
3. UNIFORM BUILDING CODE 1997
4. ANSI/EIA-222-F LIFE SAFETY CODE
5. NFPA-101-1997
6. UNIFORM MECHANICAL CODE 1997
7. UNIFORM PLUMBING CODE 1997
8. NATIONAL ELECTRIC CODE 1996
9. LOCAL BUILDING CODE(S)
10. CITY AND/OR COUNTY ORDINANCES

CODE COMPLIANCE

SHEET	DESCRIPTION
T1	TITLE SHEET
T2	GENERAL NOTES, LEGENDS, ABBV. AND ANTENNA CABLE SCHEDULE
A1	SITE PLAN AND SITE DEVELOPMENT NOTES
A2	EQUIPMENT LAYOUT PLAN
A3	ELEVATIONS
A4	ELEVATION AND DETAILS
D1	DETAILS
D2	DETAILS
EN1	ELECTRICAL NOTES AND SYMBOLS
E1	UTILITY PLAN, NOTES AND DETAILS
E2	GROUND PLAN, NOTES, AND DETAILS
E3	DETAILS
12	SHEETS TOTAL

ISSUED FOR: PERMIT

SHEET INDEX

DO NOT SCALE DRAWINGS IF NOT FULL SIZE TO 24"X36"

CONTRACTOR SHALL VERIFY ALL PLANS AND EXISTING DIMENSIONS AND CONDITIONS ON THE JOB SITE AND SHALL IMMEDIATELY NOTIFY THE ARCHITECT IN WRITING OF ANY DISCREPANCIES BEFORE PROCEEDING WITH THE WORK OR BE RESPONSIBLE FOR SAME.

SEE SHEET T2 FOR GENERAL NOTES AND SHEET D1 FOR SITE DEVELOPMENT NOTES.

GENERAL CONTRACTOR NOTES

RELEASE	
DATE	DESCRIPTION
05/13/02	PLAN CHECK COMMENTS
04/24/02	100% CONSTRUCTION DRAWINGS
04/12/02	90% CONSTRUCTION DRAWINGS

REVISIONS	
NO.	DATE
1	
2	
3	
4	
5	

THIS DRAWING IS COPYRIGHTED AND IS THE SOLE PROPERTY OF THE OWNER. IT WAS PRODUCED SOLELY FOR USE BY THE OWNER AND ITS AFFILIATES. REPRODUCTION OR USE OF THIS DRAWING AND THE INFORMATION CONTAINED IN IT IS FORBIDDEN WITHOUT THE WRITTEN PERMISSION OF THE OWNER.

DRAWN BY: BOK/JFY
CHECKED BY: DKD
APPROVED BY: DKD

SITE NAME
CHUCK E. CHEESE
SITE NUMBER
SFA-C08-142-B
SITE ADDRESS
2445 FONTAINE ROAD
SAN JOSE, CA 95121
SHEET TITLE
TITLE SHEET
SHEET NUMBER
T1

BEST AVAILABLE COPY 02-0422132

05/20/2002

ABBREVIATIONS 3

A.B.	ANCHOR BOLT	GLU-LAM	GLUE LAMINATED BEAM
ABV.	ABOVE	GPS	GLOBAL POSITIONING SYSTEM
ACCA	ANTENNA CABLE COVER ASSEMBLY	GRND.	GROUND
ADD'L	ADDITIONAL	HDR.	HEADER
A.F.F.	ABOVE FINISHED FLOOR	HGR.	HANGER
A.F.G.	ABOVE FINISHED GRADE	H.	HIGH/HEIGHT
ALUM.	ALUMINUM	ICGB.	ISOLATED COPPER GROUND BUS
ALT.	ALTERNATE	IN.(")	INCH(ES)
ANT.	ANTENNA	INT.	INTERIOR
APPRX.	APPROXIMATE(LY)	LB.(#)	POUND(S)
ARCH.	ARCHITECT(URAL)	L.B.	LAG BOLTS
AWG.	AMERICAN WIRE GAUGE	L.F.	LINEAR FEET (FOOT)
BLDG.	BUILDING	L.	LONG(ITUDINAL)
BLK.	BLOCK	MAS.	MASONRY
BLKG.	BLOCKING	MAX.	MAXIMUM
BM.	BEAM	M.B.	MACHINE BOLT
B.N.	BOUNDARY NAILING	MECH.	MECHANICAL
BTCW.	BARE TINNED COPPER WIRE	MFR.	MANUFACTURER
B.O.F.	BOTTOM OF FOOTING	MIN.	MINIMUM
B/U	BACK-UP CABINET	MISC.	MISCELLANEOUS
CAB.	CABINET	MTL.	METAL
CANT.	CANTILEVER(ED)	(N)	NEW
C.I.P.	CAST IN PLACE	NO.(#)	NUMBER
℄	CENTERLINE	N.T.S.	NOT TO SCALE
CLG.	CEILING	O.C.	ON CENTER
CLR.	CLEAR	OPNG.	OPENING
COL.	COLUMN	P/C	PRECAST CONCRETE
CONC.	CONCRETE	PCS	PERSONAL COMMUNICATION SERVICES
CONN.	CONNECTION(OR)	ℙ	PROPERTY LINE
CONST.	CONSTRUCTION	PL.	PLATE
CONT.	CONTINUOUS	PLY.	PLYWOOD
d	PENNY (NAILS)	PPC	POWER PROTECTION CABINET
DBL.	DOUBLE	PRC	PRIMARY RADIO CABINET
DEPT.	DEPARTMENT	P.S.F.	POUNDS PER SQUARE FOOT
D.F.	DOUGLAS FIR	P.S.I.	POUNDS PER SQUARE INCH
DIA.	DIAMETER	P.T.	PRESSURE TREATED
DIAG.	DIAGONAL	PWR.	POWER (CABINET)
DIM.	DIMENSION	QTY.	QUANTITY
DWG.	DRAWING(S)	RAD.(R)	RADIUS
DWL.	DOWEL(S)	REF.	REFERENCE
EA.	EACH	REINF.	REINFORCEMENT(ING)
EL.	ELEVATION	REQ'D.	REQUIRED
ELEC.	ELECTRICAL	RGS.	RIGID GALVANIZED STEEL
ELEV.	ELEVATOR	SCH.	SCHEDULE
EMT.	ELECTRICAL METALLIC TUBING	SHT.	SHEET
E.N.	EDGE NAIL	SIM.	SIMILAR
ENG.	ENGINEER	SPEC.	SPECIFICATION(S)
EQ.	EQUAL	SQ.	SQUARE
EXP.	EXPANSION	S.S.	STAINLESS STEEL
EXST.(E)	EXISTING	STD.	STANDARD
EXT.	EXTERIOR	STL.	STEEL
FAB.	FABRICATION(OR)	STRUC.	STRUCTURAL
F.F.	FINISH FLOOR	TEMP.	TEMPORARY
F.G.	FINISH GRADE	THK.	THICK(NESS)
FIN.	FINISH(ED)	T.N.	TOE NAIL
FLR.	FLOOR	T.O.A.	TOP OF ANTENNA
FDN.	FOUNDATION	T.O.C.	TOP OF CURB
F.O.C.	FACE OF CONCRETE	T.O.F.	TOP OF FOUNDATION
F.O.M.	FACE OF MASONRY	T.O.P.	TOP OF PLATE (PARAPET)
F.O.S.	FACE OF STUD	T.O.S.	TOP OF STEEL
F.O.W.	FACE OF WALL	T.O.W.	TOP OF WALL
F.S.	FINISH SURFACE	TYP.	TYPICAL
FT.(')	FOOT(FEET)	U.G.	UNDER GROUND
FTG.	FOOTING	U.L.	UNDERWRITERS LABORATORY
G.	GROWTH (CABINET)	U.N.O.	UNLESS NOTED OTHERWISE
GA.	GAUGE	V.I.F.	VERIFY IN FIELD
G.C.	GENERAL CONTRACTOR	W.	WIDE/WIDTH
GI.	GALVANIZE(D)	W/	WITH
G.F.I.	GROUND FAULT CIRCUIT INTERRUPTER	WD.	WOOD
GLB	GLUE LAMINATED BEAM	W.P.	WEATHERPROOF
		WT.	WEIGHT

ANTENNA & CABLE SCHEDULE 4

SECTOR	ANTENNA	CABLE	LENGTH	BEND RADIUS
1 (15°)	T.B.D.	7/8" COAXIAL	2 LENGTHS AT 70'	2'-0" (MIN)
2 (140°)	T.B.D.	1-5/8" COAXIAL	2 LENGTHS AT 260'	3'-0" (MIN)
3 (225°)	T.B.D.	7/8" COAXIAL	2 LENGTHS AT 70'	2'-0" (MIN)
GPS	T.B.D.	7/8" COAXIAL	1 LENGTHS AT 50'	2'-0" (MIN)

NOTE: 1. CONTRACTOR TO FIELD VERIFY ALL CABLE LENGTHS PRIOR TO ORDERING, FABRICATION, AND/OR INSTALLATION.

2. PROVIDE MECHANICAL DOWNTILT BRACKETS FOR ALL ANTENNAS

LEGENDS 2

- NEW ANTENNA
- EXISTING ANTENNA
- GROUND ROD
- GROUND BUS BAR
- MECHANICAL GRND. CONN.
- CADWELD
- GROUND ACCESS WELL
- E — ELECTRIC BOX
- T — TELEPHONE BOX
- LIGHT POLE
- FOUND MONUMENT
- DATUM ELEVATION POINT/LINE
- SET POINT
- X — REVISION
- SWITCH
- 110V DUPLEX RECEPTACLE
- X — GRID REFERENCE
- X / X-X — DETAIL REFERENCE
- X / X-X — ELEVATION REFERENCE
- X / X-X — SECTION REFERENCE
- GROUT OR PLASTER
- (E) BRICK
- (E) MASONRY
- CONCRETE
- EARTH
- GRAVEL
- PLYWOOD
- SAND
- WOOD CONTINUOUS
- WOOD BLOCKING
- STEEL
- CENTERLINE
- PROPERTY/LEASE LINE
- MATCH LINE
- WORK POINT
- — G — G — GROUND CONDUCTOR
- — T — TELEPHONE CONDUIT
- — E — ELECTRICAL CONDUIT
- — A — COAXIAL CABLE
- — T/E — JOINT TRENCH FOR POWER & TELCO CONDUITS
- — X — CHAIN LINK FENCING

GENERAL NOTES 1

GENERAL CONSTRUCTION NOTES:

1. THE FACILITY IS AN UNOCCUPIED DIGITAL TELECOMMUNICATION FACILITY.
2. PLANS ARE NOT TO BE SCALED AND ARE INTENDED TO BE A DIAGRAMMATIC OUTLINE ONLY, UNLESS NOTED OTHERWISE. THE WORK SHALL INCLUDE FURNISHING MATERIALS, EQUIPMENT, APPURTENANCES AND LABOR NECESSARY TO COMPLETE ALL INSTALLATIONS AS INDICATED ON THE DRAWINGS.
3. PRIOR TO THE SUBMISSION OF BIDS, THE CONTRACTORS SHALL VISIT THE JOB SITE AND BE RESPONSIBLE FOR ALL CONTRACT DOCUMENTS, FIELD CONDITIONS AND DIMENSIONS, AND CONFIRMING THAT THE WORK MAY BE ACCOMPLISHED AS SHOWN PRIOR TO PROCEEDING WITH CONSTRUCTION. ANY DISCREPANCIES ARE TO BE BROUGHT TO THE ATTENTION OF THE CONSTRUCTION MANAGER AND ARCHITECT/ENGINEER PRIOR TO PROCEEDING WITH THE WORK.
4. THE CONTRACTOR SHALL RECEIVE, IN WRITING, AUTHORIZATION TO PROCEED BEFORE STARTING WORK ON ANY ITEM NOT CLEARLY DEFINED OR IDENTIFIED BY THE CONTRACT DOCUMENTS.
5. CONTRACTOR SHALL CONTACT USA BEFORE PROCEEDING WITH ANY EXCAVATION, SITE WORK OR CONSTRUCTION.
6. THE CONTRACTOR SHALL INSTALL ALL EQUIPMENT AND MATERIALS IN ACCORDANCE WITH MANUFACTURER'S RECOMMENDATIONS UNLESS SPECIFICALLY INDICATED OTHERWISE OR WHERE LOCAL CODES OR REGULATIONS TAKE PRECEDENCE.
7. ALL WORK PERFORMED AND MATERIALS INSTALLED SHALL BE IN STRICT ACCORDANCE WITH ALL APPLICABLE CODES, REGULATIONS AND ORDINANCES. CONTRACTOR SHALL GIVE ALL NOTICES AND COMPLY WITH ALL LAWS, ORDINANCES, RULES, REGULATIONS AND LAWFUL ORDERS OF ANY PUBLIC AUTHORITY REGARDING THE PERFORMANCE OF THE WORK. MECHANICAL AND ELECTRICAL SYSTEMS SHALL BE INSTALLED IN ACCORDANCE WITH ALL APPLICABLE MUNICIPAL AND UTILITY COMPANY SPECIFICATIONS, AND LOCAL AND STATE JURISDICTIONAL CODES, ORDINANCES AND APPLICABLE REGULATIONS.
8. THE GENERAL CONTRACTOR SHALL SUPERVISE AND DIRECT THE WORK, USING THE BEST SKILLS AND ATTENTION. THE CONTRACTOR SHALL BE SOLELY RESPONSIBLE FOR ALL CONSTRUCTION MEANS, METHODS, TECHNIQUES, SEQUENCES AND PROCEDURES AND FOR COORDINATING ALL PORTIONS OF THE WORK UNDER THE CONTRACT INCLUDING CONTACT AND COORDINATION WITH THE CONSTRUCTION MANAGER AND WITH THE LANDLORD'S AUTHORIZED REPRESENTATIVE.
9. SEAL PENETRATIONS THROUGH FIRE RATED AREAS WITH U.L. LISTED AND FIRE CODE APPROVED MATERIALS.
10. PROVIDE A PORTABLE FIRE EXTINGUISHER WITH A RATING OF NOT LESS THAN 2-A OR 2-A10BC WITHIN 75 FEET TRAVEL DISTANCE TO ALL PORTIONS OF THE PROJECT AREA DURING CONSTRUCTION.
11. ALL CONSTRUCTION SHALL BE IN ACCORDANCE WITH CHAPTER 23 OF THE UBC REGARDING EARTHQUAKE PIPING, LIGHT FIXTURES, CEILING GRID, INTERIOR PARTITIONS AND MECHANICAL EQUIPMENT. ALL WORK MUST BE IN ACCORDANCE WITH LOCAL EARTHQUAKE CODES AND REGULATIONS.
12. DETAILS ARE INTENDED TO SHOW END RESULT OF DESIGN. MINOR MODIFICATIONS MAY BE REQUIRED TO SUIT JOB DIMENSIONS OR CONDITIONS, AND SUCH MODIFICATIONS SHALL BE INCLUDED AS PART OF THE WORK.
13. THE CONTRACTOR SHALL MAKE NECESSARY PROVISIONS TO PROTECT EXISTING IMPROVEMENTS, PAVING, CURBS, VEGETATION, GALVANIZED SURFACES, ETC., AND UPON COMPLETION OF WORK REPAIR ANY DAMAGE THAT OCCURRED DURING CONSTRUCTION TO THE SATISFACTION OF METRO PCS.
14. KEEP GENERAL AREA CLEAN, HAZARD FREE, AND DISPOSE OF ALL DIRT, DEBRIS, RUBBISH AND REMOVE EQUIPMENT NOT SPECIFIED AS REMAINING ON THE PROPERTY. LEAVE PREMISES IN CLEAN CONDITION AND FREE FROM PAINT SPOTS, DUST OR SMUDGES OF ANY NATURE.
15. REPRESENTATIONS OF TRUE NORTH, OTHER THAN THOSE FOUND ON THE PLOT OF SURVEY DRAWING (SHEET LS1), SHALL NOT BE USED TO IDENTIFY OR ESTABLISH THE BEARING OF TRUE NORTH AT THE SITE. THE CONTRACTOR SHALL RELY SOLELY ON THE PLOT OF SURVEY DRAWING AND ANY SURVEYOR'S MARKINGS AT THE SITE FOR THE ESTABLISHMENT OF TRUE NORTH, AND SHALL NOTIFY THE ARCHITECT/ENGINEER PRIOR TO PROCEEDING WITH THE WORK IF ANY DISCREPANCY IS FOUND BETWEEN THE VARIOUS ELEMENTS OF THE WORKING DRAWINGS AND THE TRUE NORTH ORIENTATION AS DEPICTED ON THE CIVIL SURVEY. THE CONTRACTOR SHALL ASSUME SOLE LIABILITY FOR ANY FAILURE TO NOTIFY THE ARCHITECT/ENGINEER.
16. PENETRATIONS OF ROOF MEMBRANES SHALL BE PATCHED/FLASHED AND MADE WATERTIGHT USING LIKE MATERIALS IN ACCORDANCE WITH NRCA ROOFING STANDARDS AND DETAILS. CONTRACTOR SHALL OBTAIN DETAILING CLARIFICATION FOR SITE-SPECIFIC CONDITIONS FROM ARCHITECT/ENGINEER, IF NECESSARY, BEFORE PROCEEDING.

STANDARD STRUCTURAL STEEL NOTES:

1. ALL METAL WORK SHALL BE IN ACCORDANCE WITH THE SPECIFICATION GALVANIZED ASTM A36 UNLESS NOTED OTHERWISE.
2. STRUCTURAL TUBING MEMBERS SHALL CONFORM TO ASTM A500, GRADE A OR A501.
3. ALL WELDING SHALL BE DONE USING E70XX ELECTRODES AND WELDING SHALL CONFORM TO AISC AND AWS D1.1. WHERE FILLET WELD SIZES ARE NOT SHOWN, PROVIDE THE MINIMUM SIZE PER TABLE J2.4 IN THE AISC "MANUAL OF STEEL CONSTRUCTION", 9TH EDITION.
4. BOLTED CONNECTIONS SHALL USE BEARING TYPE GALVANIZED ASTM A325 BOLTS (3/4" DIA.) AND SHALL HAVE A MINIMUM OF TWO BOLTS U.N.O.
5. NON-STRUCTURAL CONNECTIONS FOR HANDRAIL, LADDERS AND STEEL GRATING MAY USE 5/8" DIA. GALVANIZED ASTM A307 BOLTS U.N.O.

GENERAL STRUCTURAL NOTES:

1. WHERE A CONSTRUCTION DETAIL IS NOT SHOWN OR NOTED, THE DETAIL SHALL BE THE SAME AS FOR OTHER SIMILAR WORK, AND/OR SHALL CONFORM TO STANDARD PRACTICE IN THE TRADE(S) OR DISCIPLINES RELATED TO THE FABRICATION, MANUFACTURE, AND/OR INSTALLATION THEREOF.
2. NOTES AND DETAILS ON DRAWINGS SHALL TAKE PRECEDENCE OVER GENERAL NOTES.
3. NO PIPES, DUCTS, SLEEVES, CHASES, ETC., SHALL BE PLACED IN SLABS, BEAMS, OR WALLS UNLESS SPECIFICALLY SHOWN OR NOTED, NOR SHALL ANY STRUCTURAL MEMBER BE CUT FOR PIPES, DUCTS, ETC., UNLESS OTHERWISE NOTED. CONTRACTOR SHALL OBTAIN PRIOR APPROVAL FOR INSTALLATION OF ANY ADDITIONAL PIPES, DUCTS, ETC.
4. CONTRACTOR AGREES THAT HE SHALL ASSUME SOLE AND COMPLETE RESPONSIBILITY FOR JOB SITE CONDITIONS DURING THE COURSE OF CONSTRUCTION OF THIS PROJECT INCLUDING SAFETY OF ALL PERSONS AND PROPERTY; THAT THIS REQUIREMENT SHALL APPLY CONTINUOUSLY AND NOT BE LIMITED TO NORMAL WORKING HOURS; AND THAT THE CONTRACTOR SHALL DEFEND, INDEMNIFY AND HOLD 'METRO PCS' AND THE ARCHITECT/ENGINEER HARMLESS FROM ANY AND ALL LIABILITY, REAL OR ALLEGED, IN CONNECTION WITH THE PERFORMANCE OF WORK ON THIS PROJECT, EXCEPTING FOR LIABILITY ARISING FROM THE SOLE NEGLIGENCE OF METRO PCS OR THE ARCHITECT/ENGINEER.
5. THE CONTRACT DRAWINGS AND SPECIFICATIONS REPRESENT THE FINISHED STRUCTURE. THEY DO NOT INDICATE THE METHOD OF CONSTRUCTION. THE CONTRACTOR SHALL PROVIDE ALL MEASURES NECESSARY TO PROTECT THE STRUCTURE, WORKERS AND PEDESTRIANS DURING CONSTRUCTION. SUCH MEASURES SHALL INCLUDE, BUT NOT BE LIMITED TO BRACING, SHORING FOR LOADS DUE TO CONSTRUCTION EQUIPMENT, TEMPORARY STRUCTURES, AND PARTIALLY COMPLETED WORK, ETC. OBSERVATION VISITS TO THE SITE BY THE ARCHITECT/ENGINEER SHALL NOT INCLUDE INSPECTION OF SUCH ITEMS.
6. ASTM SPECIFICATIONS NOTED ON THE DRAWINGS SHALL BE OF THE LATEST REVISION.
7. CONSTRUCTION MATERIALS SHALL BE SPREAD OUT IF PLACED ON FRAMED FLOOR OR ROOF. LOAD SHALL NOT EXCEED THE DESIGN LIVE LOAD PER SQUARE FOOT. PROVIDE ADEQUATE SHORING/BRACING WHERE STRUCTURE HAS NOT ATTAINED DESIGN STRENGTH.
8. IT SHALL BE THE RESPONSIBILITY OF THE CONTRACTOR TO LOCATE ALL EXISTING UTILITIES WHETHER SHOWN HEREON OR NOT AND TO PROTECT THEM FROM DAMAGE. THE CONTRACTOR SHALL BEAR ALL EXPENSE OF REPAIR OR REPLACEMENT IN CONJUNCTION WITH THE PROSECUTION OF THIS WORK.
9. DIMENSIONS SHALL TAKE PRECEDENCE OVER SCALES SHOWN ON DRAWINGS.
10. THESE NOTES SHALL BE CONSIDERED A PART OF THE WRITTEN SPECIFICATIONS.
11. ALL ITEMS REMOVED DURING CONSTRUCTION WORK (I.E., DRYWALL, PLYWOOD, CEILING PANELS, ETC.) SHALL BE REPLACED TO MATCH EXISTING.
12. THE FOLLOWING REQUIREMENTS SHALL BE MET FOR SPECIAL INSPECTION:
    A. THE SPECIAL INSPECTOR SHALL BE UNDER THE SUPERVISION OF A REGISTERED PROFESSIONAL ENGINEER.
    B. THE SPECIAL INSPECTOR SHALL FURNISH INSPECTION REPORTS TO THE THE ARCHITECT/ENGINEER, AND OTHER DESIGNATED PERSONS. ALL DISCREPANCIES SHALL BE BROUGHT TO THE IMMEDIATE ATTENTION OF THE CONTRACTOR FOR CORRECTION; THEN, IF UNCORRECTED, TO THE PROPER DESIGN AUTHORITY AND THE BUILDING OFFICIAL.
    C. THE SPECIAL INSPECTOR SHALL SUBMIT A FINAL REPORT SIGNED BY BOTH HE AND HIS SUPERVISOR STATING WHETHER THE WORK REQUIRING SPECIAL INSPECTION WAS IN CONFORMANCE WITH THE APPROVED PLANS AND SPECIFICATIONS AND THE APPLICABLE WORKMANSHIP PROVISIONS OF THE UNIFORM BUILDING CODE.
    D. COMPLY WITH ALL CITY SPECIAL INSPECTION REQUIREMENTS

GENERAL CONCRETE NOTES:

1. ALL CONCRETE WORK SHALL BE IN ACCORDANCE WITH THE ACI 301-89, ACI 318-95 AND THE SPECIFICATION FOR CAST-IN-PLACE CONCRETE.
2. ALL CONCRETE SHALL HAVE A MINIMUM COMPRESSIVE STRENGTH OF 2,500 PSI AT 28 DAYS UNLESS NOTED OTHERWISE.
3. REINFORCING STEEL SHALL CONFORM TO ASTM A 615, GRADE 60, DEFORMED UNLESS NOTED OTHERWISE. WELDED WIRE FABRIC SHALL CONFORM TO ASTM A 185 WELDED STEEL WIRE FABRIC UNLESS NOTED OTHERWISE. SPLICES CLASS "B" AND ALL HOOKS SHALL BE STANDARD UNLESS NOTED OTHERWISE.
4. THE FOLLOWING MINIMUM CONCRETE COVER SHALL BE PROVIDED FOR REINFORCING STEEL UNLESS SHOWN OTHERWISE ON DRAWINGS:
   - CONCRETE CAST AGAINST EARTH ....3 IN.
   - CONCRETE EXPOSED TO EARTH OR WEATHER:
     - #6 AND LARGER ....2 IN.
     - #5 AND SMALLER & WWF........................1-1/2 IN.
   - CONCRETE NOT EXPOSED TO EARTH OR WEATHER OR NOT CAST AGAINST THE GROUND:
     - SLAB AND WALL ....3/4 IN.
     - BEAMS AND COLUMNS ....1-1/2 IN.
5. A CHAMFER 3/4" SHALL BE PROVIDED AT ALL EXPOSED EDGES OF CONCRETE U.N.O. IN ACCORDANCE WITH ACI 301 SECTION 4.2.4.
6. HOLES TO RECEIVE EXPANSION/WEDGE ANCHORS SHALL BE 1/8" LARGER IN DIAMETER THAN THE ANCHOR BOLT, DOWEL OR ROD AND SHALL CONFORM TO MANUFACTURER'S RECOMMENDATION FOR EMBEDMENT DEPTH OR AS SHOWN ON THE DRAWINGS. LOCATE AND AVOID CUTTING EXISTING REBAR WHEN DRILLING HOLES IN ELEVATED CONCRETE SLABS.
7. USE AND INSTALLATION OF CONCRETE EXPANSION/WEDGE ANCHOR, SHALL BE PER ICBO & MANUFACTURER'S WRITTEN RECOMMENDED PROCEDURES.

MetroPCS Inc.
1080 MARINA VILLAGE PARKWAY
FOURTH FLOOR
ALAMEDA, CA 94501
Phone: (510) 523-2610

DCI PACIFIC
ARCHITECTURE - ENGINEERING - PLANNING
5700 STONERIDGE MALL ROAD, #270
PLEASANTON, CA 94588
TEL: 925-730-4000 FAX: 925-730-4001

A&E PROJECT #SFA-142-B

ALL DRAWINGS AND WRITTEN MATERIAL CONTAINED HEREIN ARE THE PROPERTY OF ARCHITECT AND MAY NOT BE DUPLICATED, USED OR DISCLOSED WITHOUT THE WRITTEN CONSENT OF ARCHITECT.

SPACE RESERVED FOR PROFESSIONAL SEALS

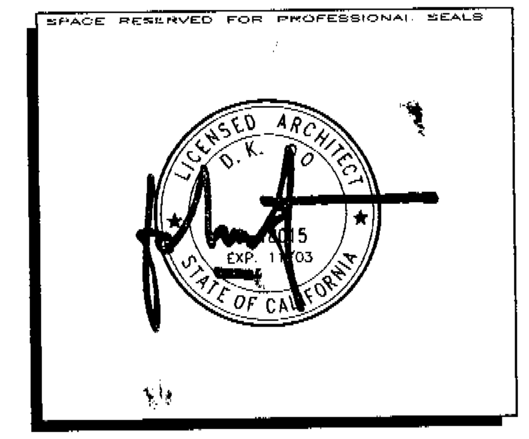

RELEASE	
DATE	DESCRIPTION:
05/13/02	PLAN CHECK COMMENTS
04/24/02	100% CONSTRUCTION DRAWINGS
04/12/02	90% CONSTRUCTION DRAWINGS

REVISIONS		
NO.	DATE	
1		
2		
3		
4		
5		

THIS DRAWING IS COPYRIGHTED AND IS THE SOLE PROPERTY OF THE OWNER. IT IS PRODUCED SOLELY FOR USE BY THE OWNER AND ITS AFFILIATES. REPRODUCTION OR USE OF THIS DRAWING AND/OR THE INFORMATION CONTAINED IN IT IS FORBIDDEN WITHOUT THE WRITTEN PERMISSION OF THE OWNER.

DRAWN BY: BOK/JFY
CHECKED BY: DKD
APPROVED BY: DKD

SITE NAME

CHUCK E. CHEESE

SITE NUMBER

SFA-C08-142-B

SITE ADDRESS

2445 FONTAINE ROAD
SAN JOSE, CA 95121

SHEET TITLE

GENERAL NOTES, LEGENDS, ABBREVIATIONS & ANTENNA CABLE SCHEDULE

SHEET NUMBER

T2

05/20/2002

1. THE ARCHITECT/ENGINEER AND REPRESENTATIVES OF THE LESSEE AND OWNER, MUST BE NOTIFIED AT LEAST TWO FULL DAYS PRIOR TO COMMENCEMENT OF CONSTRUCTION.

2. DO NOT EXCAVATE OR DISTURB SOILS BEYOND THE PROPERTY LINES OR LEASE LINES, UNLESS SPECIFICALLY INSTRUCTED, IN WRITING, BY THE ARCHITECT/ENGINEER AND LESSEE.

3. DO NOT SCALE BUILDING DIMENSIONS FROM DRAWINGS.

4. ANY DRAIN AND/OR FIELD TILE ENCOUNTERED DURING CONSTRUCTION SHALL BE RETURNED TO ITS ORIGINAL CONDITION PRIOR TO COMPLETION OF WORK. SIZE, LOCATION AND TYPE OF ANY UNDERGROUND UTILITIES OR IMPROVEMENTS SHALL BE ACCURATELY NOTED AND PLACED ON AS-CONSTRUCTED DRAWINGS BY GENERAL CONTRACTOR AND ISSUED TO ARCHITECT/ENGINEER AT COMPLETION OF PROJECT.

5. ALL EXISTING UTILITIES, FACILITIES, CONDITIONS, AND THEIR DIMENSIONS SHOWN ON PLANS HAVE BEEN PLOTTED FROM AVAILABLE RECORDS. THE ARCHITECT/ENGINEER, LESSEE, AND OWNER ASSUME NO RESPONSIBILITY WHATSOEVER AS TO THE SUFFICIENCY OR ACCURACY OF THE INFORMATION SHOWN ON THE PLANS OR THE MANNER OF THEIR REMOVAL OR ADJUSTMENT. CONTRACTOR SHALL BE RESPONSIBLE FOR DETERMINING EXACT LOCATION OF ALL EXISTING UTILITIES AND FACILITIES PRIOR TO START OF CONSTRUCTION. CONTRACTOR SHALL ALSO OBTAIN FROM EACH UTILITY COMPANY DETAILED INFORMATION RELATIVE TO WORKING SCHEDULES AND METHODS OF REMOVING OR ADJUSTING EXISTING UTILITIES.

6. CONTRACTOR SHALL VERIFY ALL EXISTING UTILITIES BOTH HORIZONTALLY AND VERTICALLY PRIOR TO START OF CONSTRUCTION. ANY DISCREPANCIES OR DOUBTS AS TO THE INTERPRETATION OF PLANS SHOULD BE IMMEDIATELY REPORTED TO THE ARCHITECT/ENGINEER FOR RESOLUTION AND INSTRUCTION, AND NO FURTHER WORK SHALL BE PERFORMED UNTIL THE DISCREPANCY IS CHECKED AND CORRECTED BY THE ARCHITECT/ENGINEER. FAILURE TO SECURE SUCH INSTRUCTION MEANS CONTRACTOR WILL HAVE WORKED AT HIS/HER OWN RISK AND EXPENSE. CONTRACTOR SHALL CALL LOCAL DIGGER HOT LINE FOR UTILITY LOCATIONS 48 HOURS PRIOR TO START OF CONSTRUCTION.

7. ALL NEW AND EXISTING UTILITY STRUCTURES ON SITE AND IN AREAS TO BE DISTURBED BY CONSTRUCTION SHALL BE ADJUSTED TO FINISH ELEVATIONS PRIOR TO FINAL INSPECTION OF WORK.

8. THE BUILDING DEPARTMENT ISSUING THE BUILDING PERMIT SHALL BE NOTIFIED AT LEAST TWO WORKING DAYS PRIOR TO THE COMMENCEMENT OF WORK OR AS STIPULATED BY THE CODE ENFORCEMENT OFFICIAL HAVING JURISDICTION.

9. GRADING OF THE SITE WORK AREA IS TO BE SMOOTH AND CONTINUOUS IN SLOPE AND IS TO FEATHER INTO EXISTING GRADES AT THE GRADING LIMITS.

10. ALL TEMPORARY EXCAVATIONS FOR THE INSTALLATION OF FOUNDATIONS, UTILITIES, ETC., SHALL BE PROPERLY LAID BACK OR BRACED IN ACCORDANCE WITH CORRECT OCCUPATIONAL SAFETY AND HEALTH ADMINISTRATION (OSHA) REQUIREMENTS.

11. STRUCTURAL FILLS SUPPORTING PAVEMENTS SHALL BE COMPACTED TO 100% OF MAXIMUM STANDARD PROCTOR DRY DENSITY.

12. NEW GRADES NOT IN BUILDING AND DRIVEWAY IMPROVEMENT AREA TO BE ACHIEVED BY FILLING WITH APPROVED CLEAN FILL AND COMPACTED TO 95% OF STANDARD PROCTOR DENSITY.

13. ALL FILL SHALL BE PLACED IN UNIFORM LIFTS. EACH LIFT'S THICKNESS SHOULD NOT EXCEED THAT WHICH CAN BE PROPERLY COMPACTED THROUGHOUT ITS ENTIRE DEPTH WITH THE EQUIPMENT AVAILABLE.

14. ANY FILLS PLACED ON EXISTING SLOPES THAT ARE STEEPER THAN 10 HORIZONTAL TO 1 VERTICAL SHALL BE PROPERLY BENCHED INTO THE EXISTING SLOPE AS DIRECTED BY A GEOTECHNICAL ENGINEER.

15. THE GRADES WITHIN FENCED AREAS ARE TO BE ACHIEVED BY COMPACTING CLEAN FILL TO A DENSITY OF 90% OF STANDARD PROCTOR COVERING THE AREA WITH GEO-TECH CLOTH (18" MIN. OVERLAP AT ALL SEAMS) FOR WEED SUPPRESSION, THEN ACHIEVING FINISH GRADE BY ADDING 6" OF 3/4" CRUSHED STONE, NO FINES.

16. CONTRACTOR SHALL CLEAN ENTIRE SITE AFTER CONSTRUCTION SUCH THAT NO PAPERS, TRASH, WEEDS, BRUSH OR ANY OTHER DEPOSITS WILL REMAIN. ALL MATERIALS COLLECTED DURING CLEANING OPERATIONS SHALL BE DISPOSED OF OFF-SITE BY THE GENERAL CONTRACTOR.

17. ALL TREES AND SHRUBS WHICH ARE NOT IN DIRECT CONFLICT WITH THE IMPROVEMENTS SHALL BE TRIMMED AS REQUIRED AND PROTECTED IN PLACE BY THE GENERAL CONTRACTOR.

18. DRIVEWAY CONSTRUCTION, GRADING AND DRAINAGE WORK SHALL CONFORM TO CALIFORNIA DEPARTMENT OF TRANSPORTATION "STANDARD SPECIFICATION FOR ROAD AND BRIDGE CONSTRUCTION", LATEST EDITIONS, AND ALL APPLICABLE PROVISIONS OF LOCAL COUNTY ORDINANCES.

19. IT SHALL BE THE RESPONSIBILITY OF THE GENERAL CONTRACTOR TO OBTAIN, READ, AND FOLLOW THE GEO-TECHNICAL REPORT FOR EACH PROJECT SITE. ALL PROVISIONS WITHIN SAID REPORT SHALL BE ACCOMMODATED BY THE GENERAL CONTRACTOR AND ALL SUBCONTRACTORS. CONTINUOUS ONSITE SUPERVISION BY THE GEO-TECHNICAL/SOILS ENGINEER SHALL BE ARRANGED FOR BY THE CONTRACTOR PRIOR TO THE START OF ANY EXCAVATION AND/OR GRADING OPERATIONS. IT SHALL BE THE RESPONSIBILITY OF THE CONTRACTOR TO NOTIFY THE GEO-TECHNICAL/SOILS ENGINEER PRIOR TO THE START OF CONSTRUCTION. THE CONTRACTOR SHALL OBTAIN WRITTEN APPROVAL FROM THE SUPERVISING GEO-TECHNICAL ENGINEER PRIOR TO PROCEEDING WITH PLACEMENT OF ANY FORMS AND/OR MATERIALS.

20. IT SHALL BE THE RESPONSIBILITY OF THE GENERAL CONTRACTOR TO PROVIDE AND INSTALL ALL REQUIRED SIGNS FOR THIS PROJECT. THE CONTRACTOR SHALL OBTAIN WRITTEN INSTRUCTIONS FROM THE CONSTRUCTION MANAGER AS TO THE EXACT MATERIAL, SIZE, WORDING, AND LOCATION FOR ALL SIGNS.

SIGNS THAT MAY BE REQUIRED INCLUDE, BUT ARE NOT LIMITED TO, THE FOLLOWING:
- a. 7x24 ACCESS SIGN.
- b. SITE ENTRY SIGN.
- c. ANTENNA STRUCTURE COMPLIANCE SIGN.
- d. NEPA RF EXPOSURE SIGN(S).
- e. ANY ADDITIONAL SIGNS AS REQUIRED BY 'METRO PCS' AND/OR GOVERNMENTAL AGENCIES.

SITE DEVELOPMENT NOTES

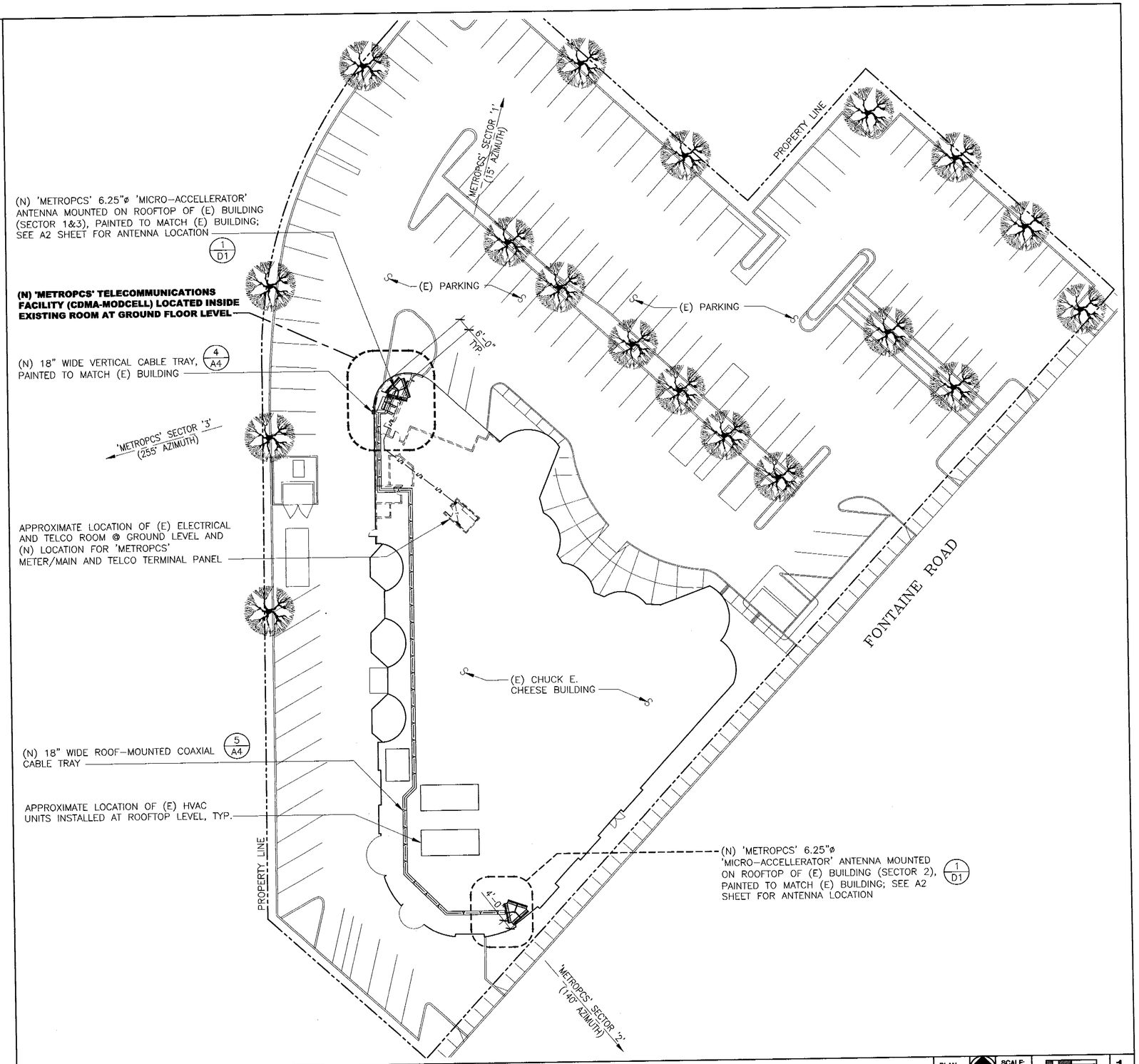

SITE PLAN

PLAN NORTH | NORTH | SCALE: 1"=20'-0" | 0 10' 20' | 1

MetroPCS Inc.
1080 MARINA VILLAGE PARKWAY
FOURTH FLOOR
ALAMEDA, CA 94501
Phone: (510) 523-2610

DCI PACIFIC
ARCHITECTURE - ENGINEERING - PLANNING
5700 STONERIDGE MALL ROAD, #270
PLEASANTON, CA 94588
TEL: 925-730-4000 FAX: 925-730-4001

A&E PROJECT #SFA-142-B

ALL DRAWINGS AND WRITTEN MATERIAL CONTAINED HEREIN ARE THE PROPERTY OF ARCHITECT AND MAY NOT BE DUPLICATED, USED OR DISCLOSED WITHOUT THE WRITTEN CONSENT OF ARCHITECT.

SPACE RESERVED FOR PROFESSIONAL SEALS

LICENSED ARCHITECT D. K. DOW C-18015 EXP. 12-31-02 STATE OF CALIFORNIA

RELEASE	
DATE	DESCRIPTION:
05/13/02	PLAN CHECK COMMENTS
04/24/02	100% CONSTRUCTION DRAWINGS
04/12/02	90% CONSTRUCTION DRAWINGS

REVISIONS		
NO.	DATE	
1		
2		
3		
4		
5		

THIS DRAWING IS COPYRIGHTED AND IS THE SOLE PROPERTY OF THE OWNER. IT IS PRODUCED SOLELY FOR USE BY THE OWNER AND ITS AFFILIATES. REPRODUCTION OR USE OF THIS DRAWING AND/OR THE INFORMATION CONTAINED IN IT IS FORBIDDEN WITHOUT THE WRITTEN PERMISSION OF THE OWNER.

DRAWN BY: BOK/JFY
CHECKED BY: DKD
APPROVED BY: DKD

SITE NAME
CHUCK E. CHEESE

SITE NUMBER
SFA-C08-142-B

SITE ADDRESS
2445 FONTAINE ROAD
SAN JOSE, CA 95121

SHEET TITLE
SITE PLAN

SHEET NUMBER
A1

05/20/2002

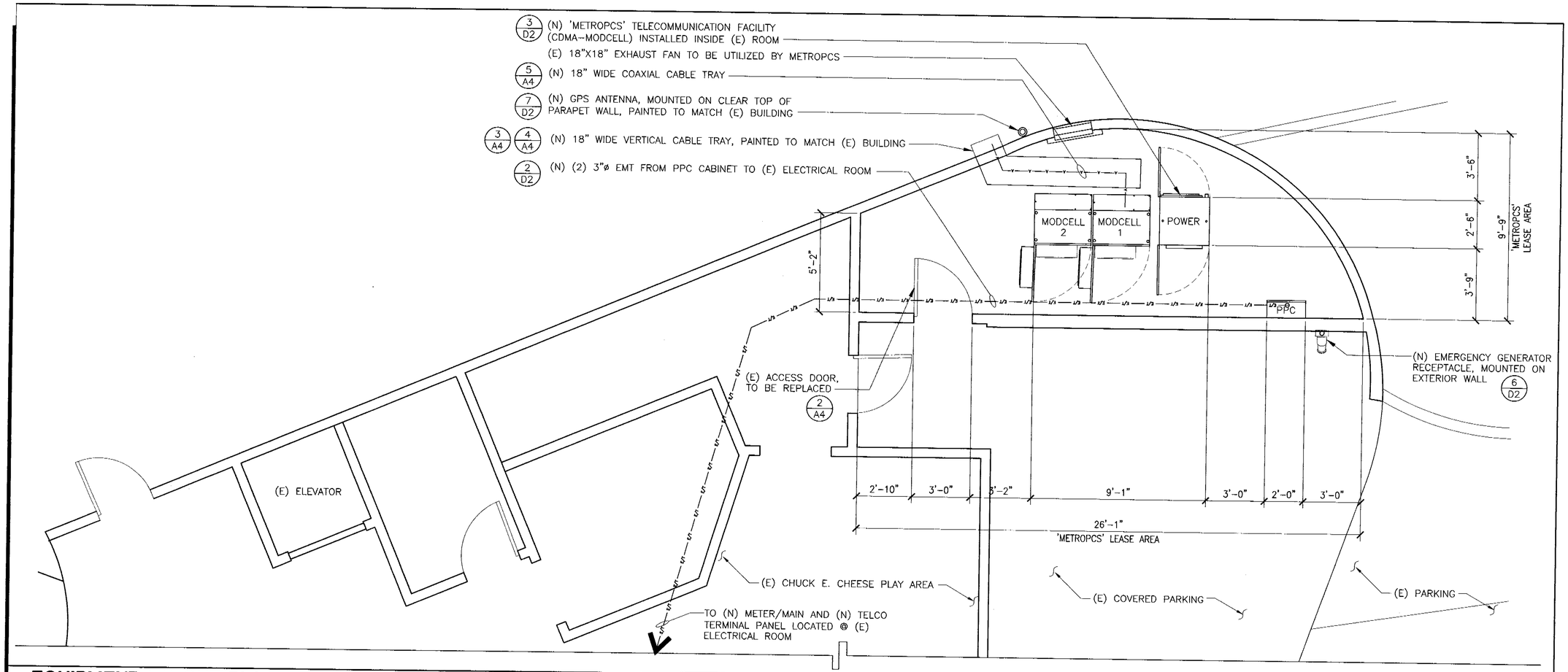

EQUIPMENT LAYOUT PLAN

PLAN NORTH — SCALE: 3/8"=1'-0" — 0 1' 2' 3' — 1

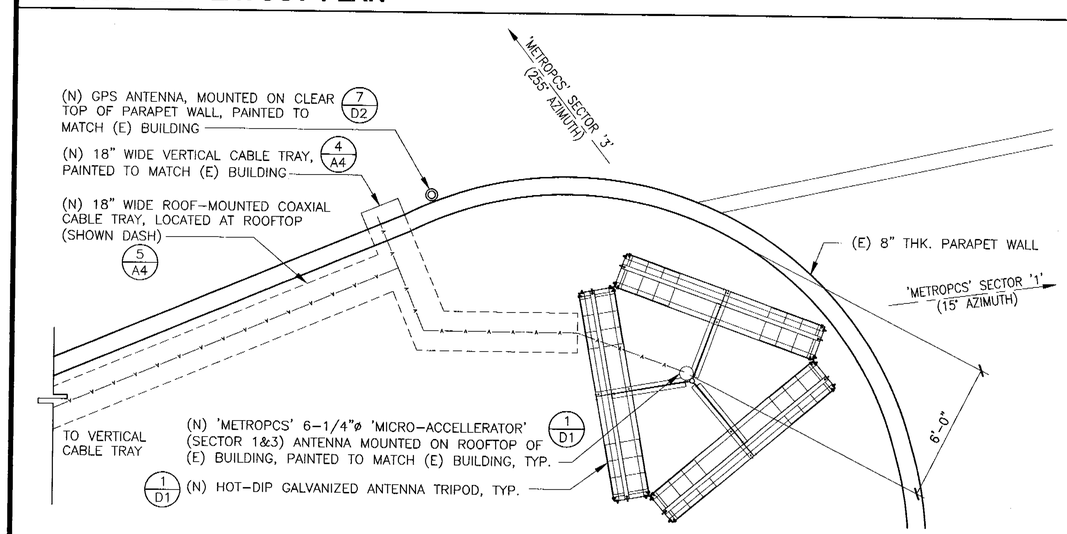

ANTENNA LOCATION @ ROOFTOP (SECTOR 1 & 3)

PLAN NORTH — SCALE: 3/8"=1'-0" — 0 1' 2' 3' — 3

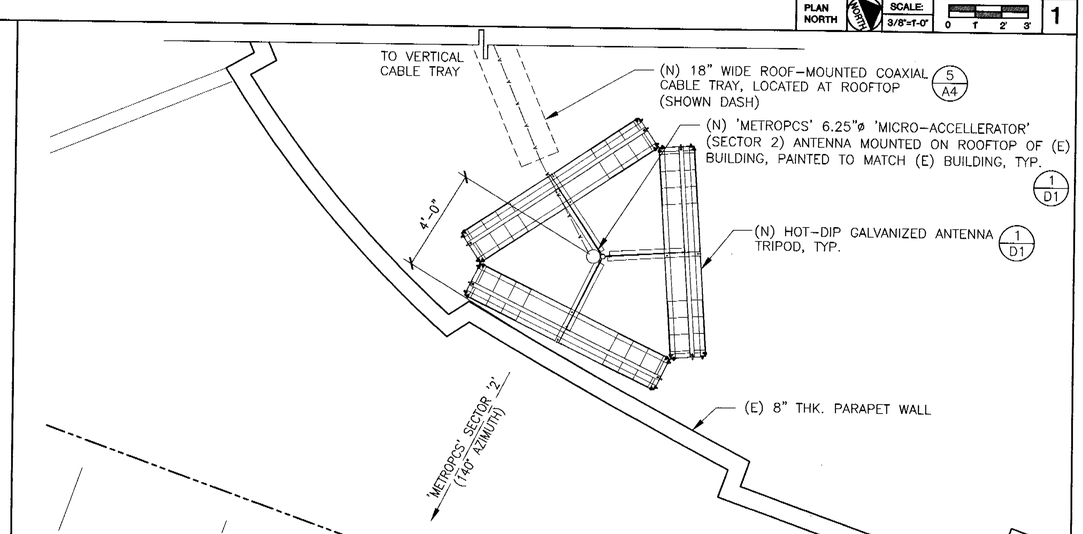

ANTENNA LOCATION @ ROOFTOP (SECTOR 2)

PLAN NORTH — SCALE: 3/8"=1'-0" — 0 1' 2' 3' — 2

MetroPCS Inc.
1080 MARINA VILLAGE PARKWAY
FOURTH FLOOR
ALAMEDA, CA 94501
Phone: (510) 523-2610

DCI PACIFIC
ARCHITECTURE - ENGINEERING - PLANNING
5700 STONERIDGE MALL ROAD, #270
PLEASANTON, CA 94588
TEL: 925-730-4000 FAX: 925-730-4001

A&E PROJECT #SFA-142-B

ALL DRAWINGS AND WRITTEN MATERIAL CONTAINED HEREIN ARE THE PROPERTY OF ARCHITECT AND MAY NOT BE DUPLICATED, USED OR DISCLOSED WITHOUT THE WRITTEN CONSENT OF ARCHITECT.

SPACE RESERVED FOR PROFESSIONAL SEALS

LICENSED ARCHITECT D.K. DO C-18 STATE OF CALIFORNIA

RELEASE	
DATE	DESCRIPTION:
05/13/02	PLAN CHECK COMMENTS
04/24/02	100% CONSTRUCTION DRAWINGS
04/12/02	90% CONSTRUCTION DRAWINGS

REVISIONS		
NO.	DATE	
1		
2		
3		
4		
5		

THIS DRAWING IS COPYRIGHTED AND IS THE SOLE PROPERTY OF THE OWNER. IT IS PRODUCED SOLELY FOR USE BY THE OWNER AND ITS AFFILIATES. REPRODUCTION OR USE OF THIS DRAWING AND/OR THE INFORMATION CONTAINED IN IT IS FORBIDDEN WITHOUT THE WRITTEN PERMISSION OF THE OWNER.

DRAWN BY: BOK/JFY
CHECKED BY: DKD
APPROVED BY: DKD

SITE NAME

CHUCK E. CHEESE

SITE NUMBER

SFA-C08-142-B

SITE ADDRESS

2445 FONTAINE ROAD
SAN JOSE, CA 95121

SHEET TITLE

EQUIPMENT LAYOUT PLAN

SHEET NUMBER

A2

05/20/2002

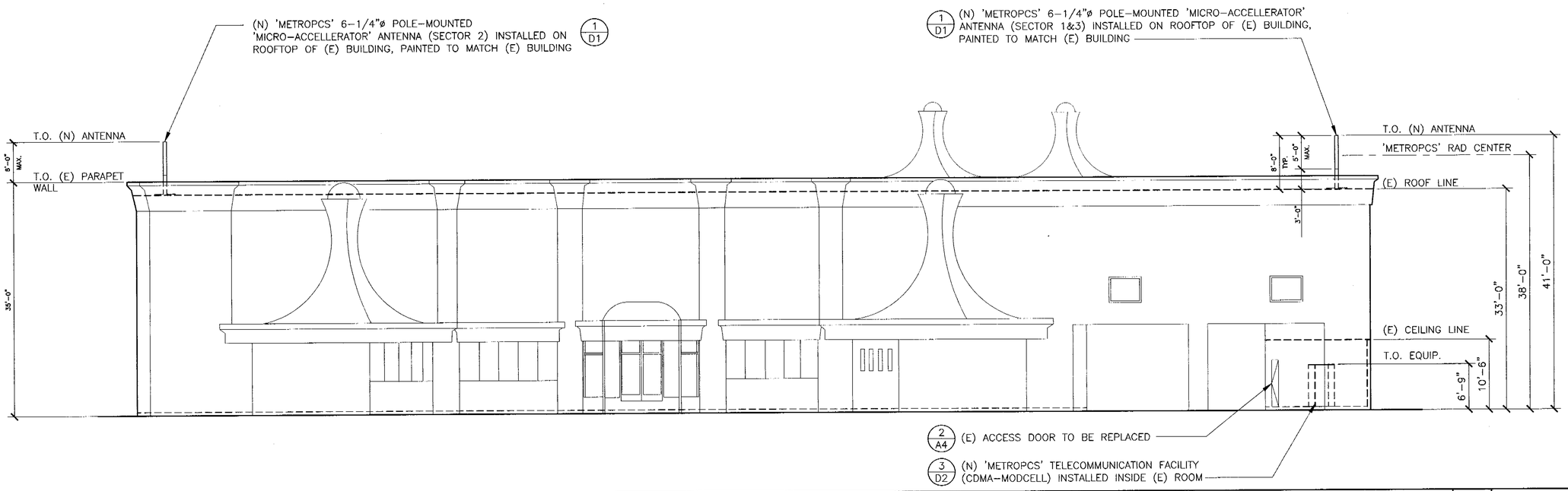

NORTHEAST ELEVATION

SCALE: 1/8"=1'-0" 0 4' 8' 1

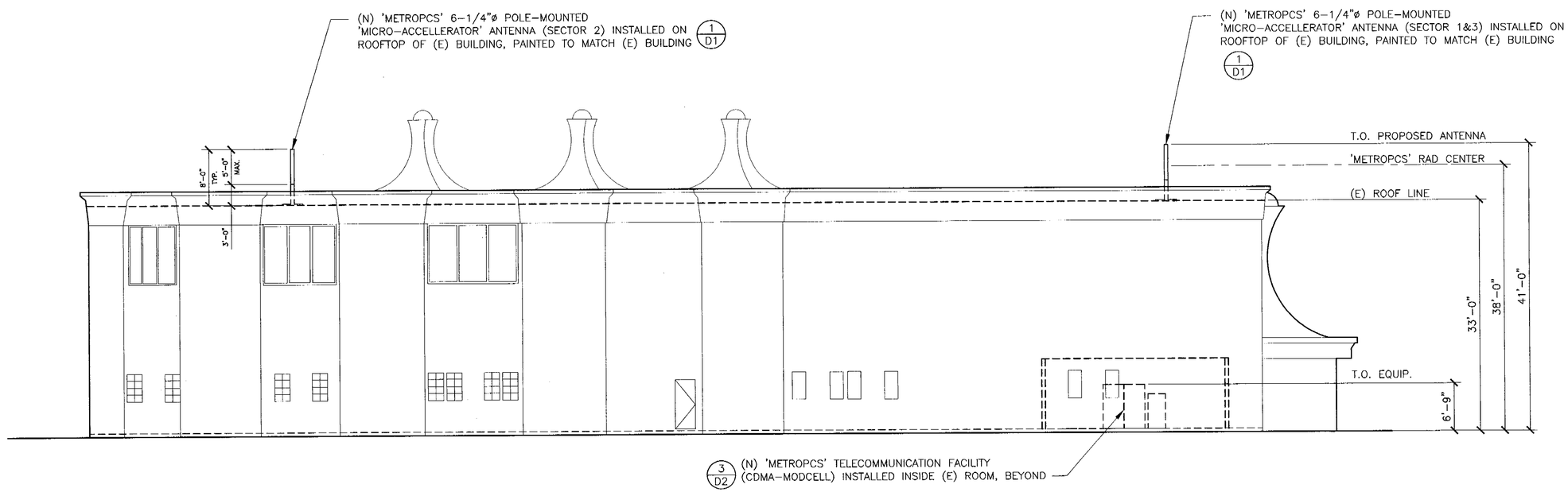

SOUTHEAST ELEVATION

SCALE: 1/8"=1'-0" 0 4' 8' 2

MetroPCS Inc.
1080 MARINA VILLAGE PARKWAY
FOURTH FLOOR
ALAMEDA, CA 94501
Phone: (510) 523-2610

DCI PACIFIC
ARCHITECTURE - ENGINEERING - PLANNING
5700 STONERIDGE MALL ROAD, #270
PLEASANTON, CA 94588
TEL: 925-730-4000 FAX: 925-730-4001

A&E PROJECT #SFA-142-B

ALL DRAWINGS AND WRITTEN MATERIAL CONTAINED HEREIN ARE THE PROPERTY OF ARCHITECT AND MAY NOT BE DUPLICATED, USED OR DISCLOSED WITHOUT THE WRITTEN CONSENT OF ARCHITECT.

SPACE RESERVED FOR PROFESSIONAL SEALS

LICENSED ARCHITECT D.K. DO C-18 STATE OF CALIFORNIA

RELEASE	
DATE	DESCRIPTION:
05/13/02	PLAN CHECK COMMENTS
04/24/02	100% CONSTRUCTION DRAWINGS
04/12/02	90% CONSTRUCTION DRAWINGS

REVISIONS		
NO.	DATE	
1		
2		
3		
4		
5		

THIS DRAWING IS COPYRIGHTED AND IS THE SOLE PROPERTY OF THE OWNER. IT IS PRODUCED SOLELY FOR USE BY THE OWNER AND ITS AFFILIATES. REPRODUCTION OR USE OF THIS DRAWING AND/OR THE INFORMATION CONTAINED IN IT IS FORBIDDEN WITHOUT THE WRITTEN PERMISSION OF THE OWNER.

DRAWN BY: BOK/JFY
CHECKED BY: DKD
APPROVED BY: DKD

SITE NAME

CHUCK E. CHEESE

SITE NUMBER

SFA-C08-142-B

SITE ADDRESS

2445 FONTAINE ROAD
SAN JOSE, CA 95121

SHEET TITLE

ELEVATIONS

SHEET NUMBER

A3

05/20/2002

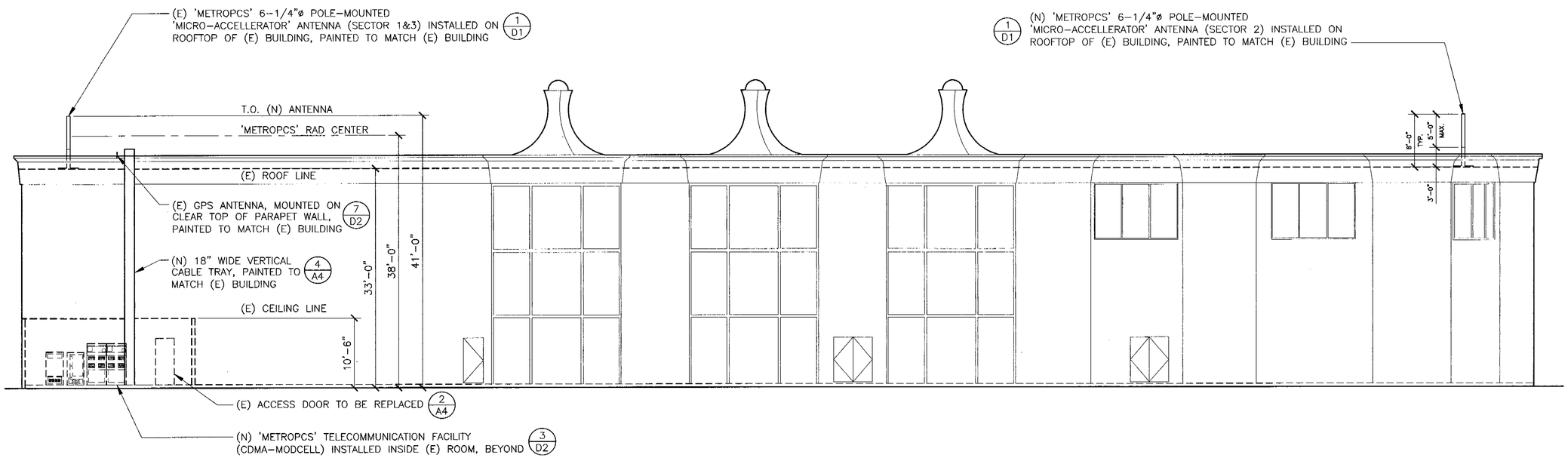

WEST ELEVATION

SCALE: 1/8"=1'-0" 0 4' 8' — 1

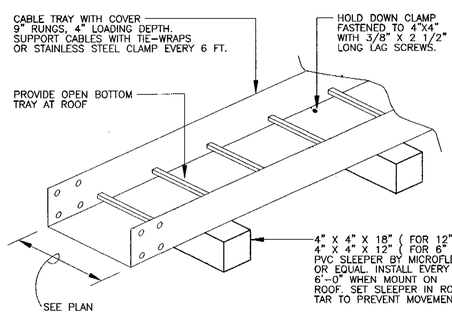

NOTE:
1. RUN #2 AWG BCW GROUND CONDUCTOR ALONG CABLE TRAY PER DETAIL 507 AND GROUND AT BOTH ENDS.
2. CABLE TRAYS SHALL BE FREE OF SHARP OBJECTS AND BURRS WHICH COULD INJURE CABLES. COVERS SHALL BE FASTENED USING HOLD DOWN CLIPS. SHEET METAL SCREWS ARE NOT ACCEPTABLE.
3. CABLE TRAY COVER TO BE 16 GA.

HORIZONTAL COAXIAL CABLE TRAY

SCALE: NTS — 5

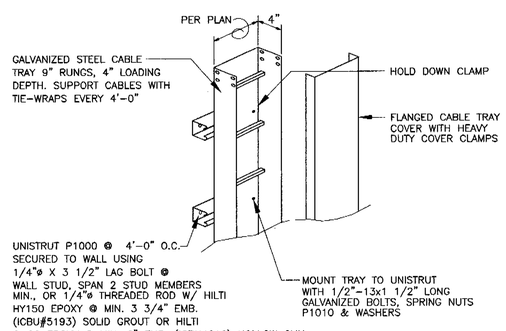

NOTE:
1. CABLE TRAYS SHALL BE FREE OF SHARP OBJECTS AND BURRS WHICH COULD INJURE CABLES. COVERS SHALL BE FASTENED USING HOLD DOWN CLIPS. SHEET METAL SCREWS ARE NOT ACCEPTABLE.
2. VERTICAL TRAY AND COVER SHALL BE PAINTED TO MATCH EXISTING BUILDING.

COAXIAL CABLE TRAY ON WALL

SCALE: NTS — 4

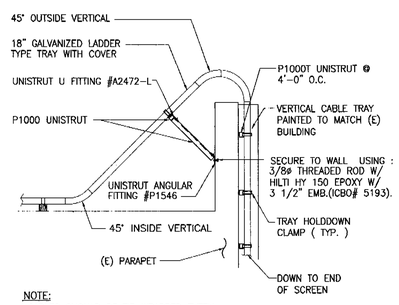

NOTE:
CABLES SHOULD BE TIE-WRAPPED EVERY 6'-0" HORIZONTALLY, AND EVERY 3'-0" ON RISERS.

COAXIAL CABLE GOOSENECK

SCALE: NTS — 3

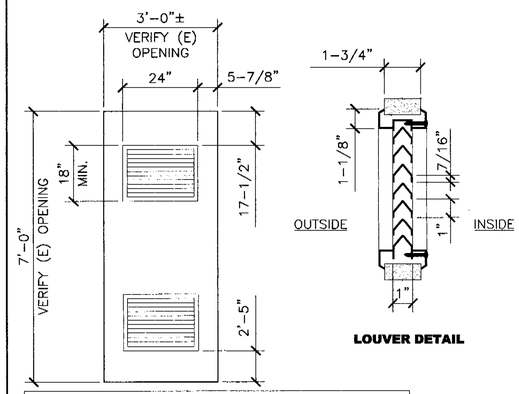

3'-0" X 7'-0" HEAVY DUTY ENTRANCE METAL DOOR WITH (2) 24"X18" LOUVERS; (E) DOOR OPENING TO BE VERIFIED IN FIELD. (E) DOOR TO BE REMOVED

PROVIDE HEAVY DUTY LEVERSET WITH SINGLE CYLINDER DEADBOLT, ACCESSIBLE FROM INSIDE

METAL DOOR DETAIL

SCALE: NTS — 2

MetroPCS Inc
1080 MARINA VILLAGE PARKWAY
FOURTH FLOOR
ALAMEDA, CA 94501
Phone: (510) 523-2610

DCI PACIFIC
ARCHITECTURE - ENGINEERING - PLANNING
5700 STONERIDGE MALL ROAD, #270
PLEASANTON, CA 94588
TEL: 925-730-4000 FAX: 925-730-4001

A&E PROJECT #SFA-142-B

ALL DRAWINGS AND WRITTEN MATERIAL CONTAINED HEREIN ARE THE PROPERTY OF ARCHITECT AND MAY NOT BE DUPLICATED, USED OR DISCLOSED WITHOUT THE WRITTEN CONSENT OF ARCHITECT.

SPACE RESERVED FOR PROFESSIONAL SEALS

LICENSED ARCHITECT D. K. DO 8015 EXP. 1/03 STATE OF CALIFORNIA

RELEASE	
DATE	DESCRIPTION:
05/13/02	PLAN CHECK COMMENTS
04/24/02	100% CONSTRUCTION DRAWINGS
04/12/02	90% CONSTRUCTION DRAWINGS

REVISIONS		
NO.	DATE	
1		
2		
3		
4		
5		

THIS DRAWING IS COPYRIGHTED AND IS THE SOLE PROPERTY OF THE OWNER. IT IS PRODUCED SOLELY FOR USE BY THE OWNER AND ITS AFFILIATES. REPRODUCTION OR USE OF THIS DRAWING AND/OR THE INFORMATION CONTAINED IN IT IS FORBIDDEN WITHOUT THE WRITTEN PERMISSION OF THE OWNER.

DRAWN BY: BOK/JFY
CHECKED BY: DKD
APPROVED BY: DKD

SITE NAME
CHUCK E. CHEESE

SITE NUMBER
SFA-C08-142-B

SITE ADDRESS
2445 FONTAINE ROAD SAN JOSE, CA 95121

SHEET TITLE
ELEVATION AND DETAILS

SHEET NUMBER
A4

05/20/2002

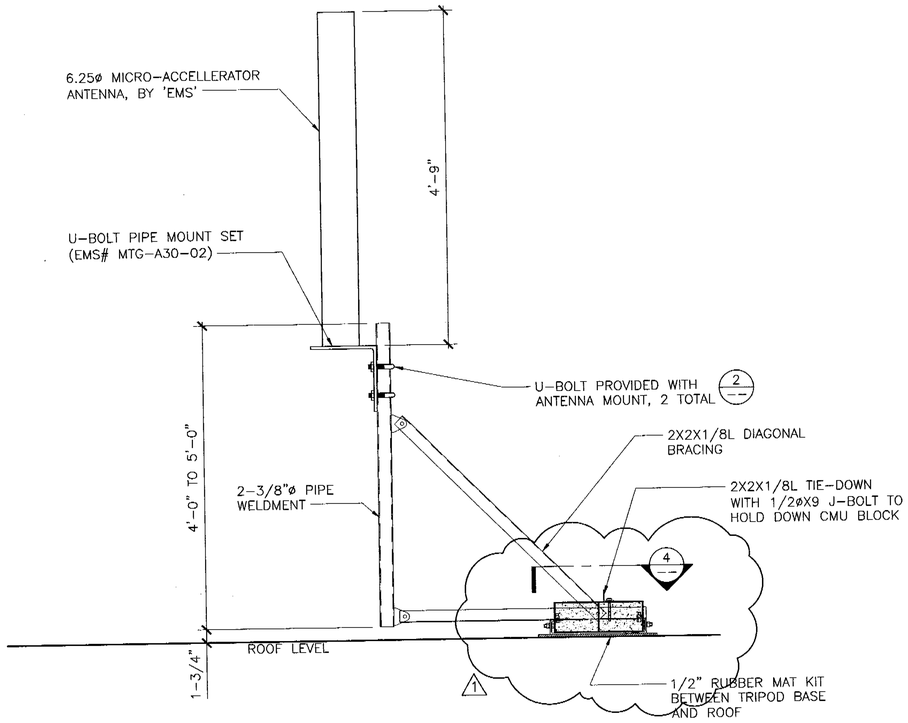

ANTENNA TRIPOD MOUNT (ELEVATION)

SCALE: 1"=1'-0" 3

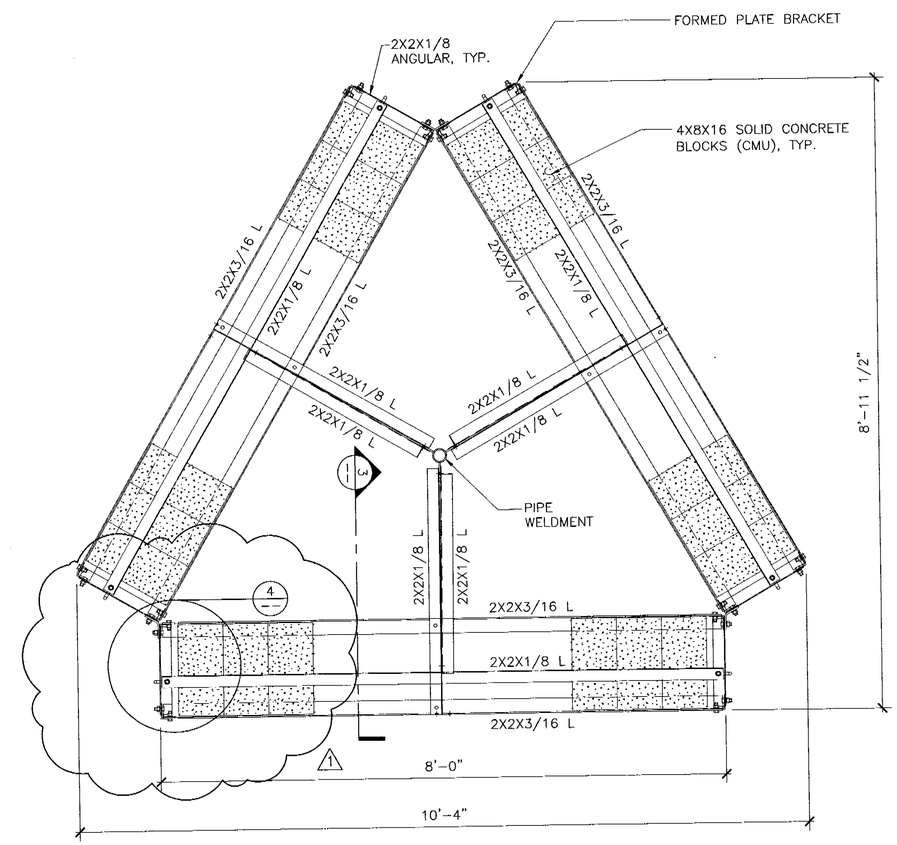

NOTES:
1. USE 31-99280 NON-PENETRATING ROOF MOUNT TRIPOD BY 'VALMONT' OR APPROVED EQUAL.

2. ALL STEEL PARTS AND HARDWARES TO BE HOT-DIPPED GALVANIZED

ANTENNA TRIPOD MOUNT (PLAN)

SCALE: 1"=1'-0" 1

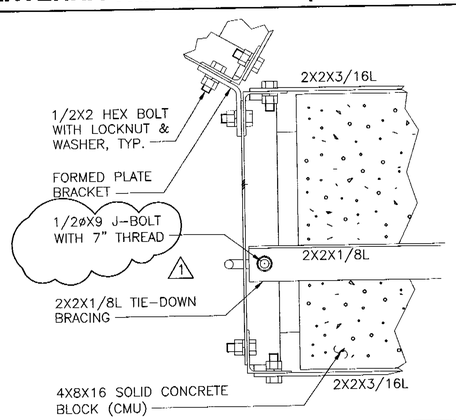

DETAIL

SCALE: N.T.S. 4

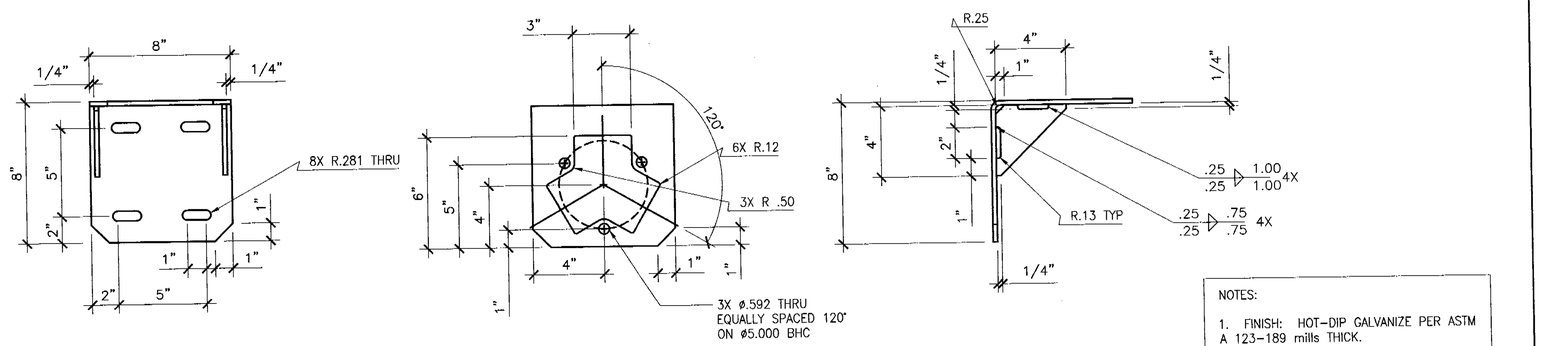

NOTES:

1. FINISH: HOT-DIP GALVANIZE PER ASTM A 123-189 mills THICK.

U-BOLT PIPE MOUNT FOR ACCELLERATOR ANTENNA

SCALE: NTS 2

05/20/2002

MetroPCS Inc.
1080 MARINA VILLAGE PARKWAY
FOURTH FLOOR
ALAMEDA, CA 94501
Phone: (510) 523-2610

DCI PACIFIC
ARCHITECTURE - ENGINEERING - PLANNING
5700 STONERIDGE MALL ROAD, #270
PLEASANTON, CA 94588
TEL: 925-730-4000 FAX: 925-730-4001

A&E PROJECT #SFA-142-B

ALL DRAWINGS AND WRITTEN MATERIAL CONTAINED HEREIN ARE THE PROPERTY OF ARCHITECT AND MAY NOT BE DUPLICATED, USED OR DISCLOSED WITHOUT THE WRITTEN CONSENT OF ARCHITECT.

SPACE RESERVED FOR PROFESSIONAL SEAL

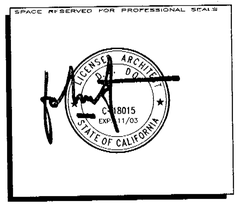

RELEASE	
DATE	DESCRIPTION:
05/13/02	PLAN CHECK COMMENTS
04/24/02	100% CONSTRUCTION DRAWINGS
04/12/02	90% CONSTRUCTION DRAWINGS

REVISIONS		
NO.	DATE	
1		
2		
3		
4		
5		

THIS DRAWING IS COPYRIGHTED AND IS THE SOLE PROPERTY OF THE OWNER. IT IS PRODUCED SOLELY FOR USE BY THE OWNER AND ITS AFFILIATES. REPRODUCTION OR USE OF THIS DRAWING AND/OR THE INFORMATION CONTAINED IN IT IS FORBIDDEN WITHOUT THE WRITTEN PERMISSION OF THE OWNER.

DRAWN BY: BOK/JFY
CHECKED BY: DKD
APPROVED BY: DKD

SITE NAME

CHUCK E. CHEESE

SITE NUMBER

SFA-C08-142-B

SITE ADDRESS

2445 FONTAINE ROAD
SAN JOSE, CA 95121

SHEET TITLE

DETAILS

SHEET NUMBER

D1

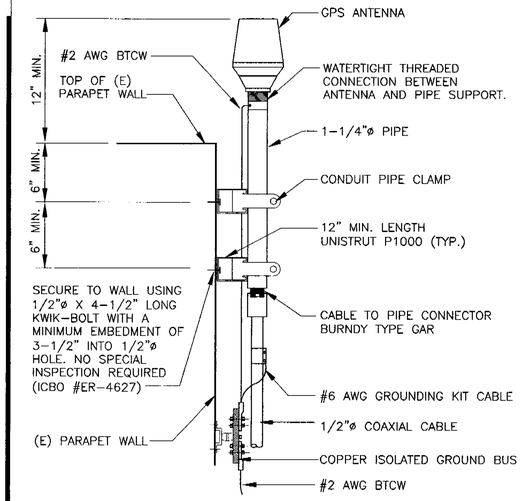

GPS ANTENNA

SCALE: NTS | 7

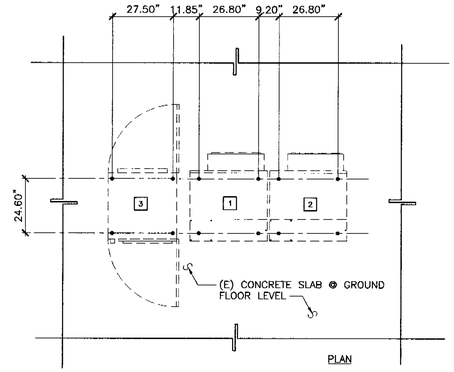

KEYNOTES

1. MODULAR CELL #1 (WT= 1194.0 LBS MAX.)
2. MODULAR CELL #2 (WT= 1194.0 LBS MAX.)
3. POWERHOUSE 24 (WT= 1750.0 LBS MAX.)

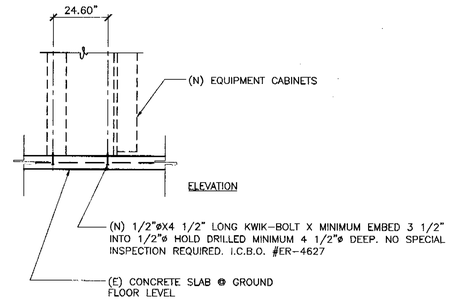

NOTE:

1. VERIFY ALL DIMENSIONS AND CONDUIT SIZES WITH EQUIPMENT MANUFACTURER/SUPPLIER
2. CONTRACTOR TO PROVIDE SKID CHANNEL AS REQUIRED BY EQUIPMENT MANUFACTURER, VERIFY WITH CONSTRUCTION MANAGER
3. ALL ANCHORS SHALL BE 1/2"øX4 1/2" LONG KWIK-BOLT X MINIMUM EMBED 3 1/2" INTO 1/2"ø HOLD DRILLED MINIMUM 4 1/2"ø DEEP. NO SPECIAL INSPECTION REQUIRED. I.C.B.O. #ER-4627

EQUIPMENT AND BOLT LAYOUT

SCALE: NTS | 3

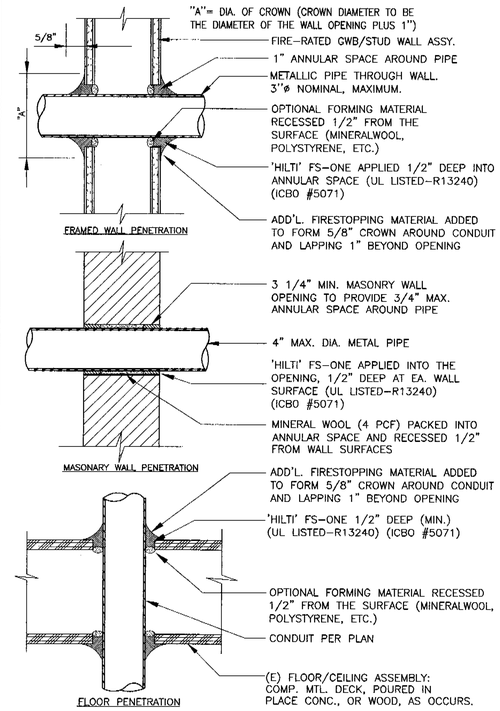

NOTES:

1. PENETRATIONS THRU RATED WALL ASSEMBLIES SHALL COMPLY WITH T24, CBC SECTION 709.6 AS FOLLOWS:

F RATING – PENETRATIONS 4"ø OR LESS

T RATING – PENETRATIONS LARGER THAN 4"ø, PENETRATIONS AT CORRIDOR CEILINGS WHICH ARE NOT RATED, BELOW ANY CEILING.

2. PENETRATIONS THRU RATED FLOOR/CEILING ASSEMBLIES SHALL COMPLY WITH T24, CBC SECTION 710.3 AS FOLLOWS:

F RATING – PENETRATIONS 4"ø OR LESS

T RATING – PENETRATIONS LARGER THAN 4"ø, PENETRATIONS NOT CONTAINED WITHIN A WALL.

3. ALL PENETRATIONS THROUGH RATED BUILDING ASSEMBLIES SHALL CONFORM TO TITLE 24, CALIF. BLDG. CODE, SECTION 714.

PENETRATION FIRE STOPPING

SCALE: NTS | 1

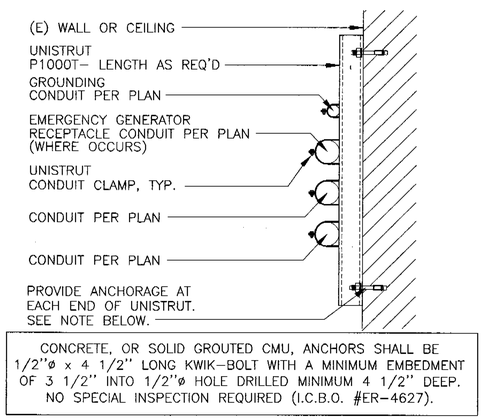

CONCRETE, OR SOLID GROUTED CMU, ANCHORS SHALL BE 1/2"ø x 4 1/2" LONG KWIK-BOLT WITH A MINIMUM EMBEDMENT OF 3 1/2" INTO 1/2"ø HOLE DRILLED MINIMUM 4 1/2" DEEP. NO SPECIAL INSPECTION REQUIRED (I.C.B.O. #ER-4627).

CONDUITS ON WALL

SCALE: NTS | 8

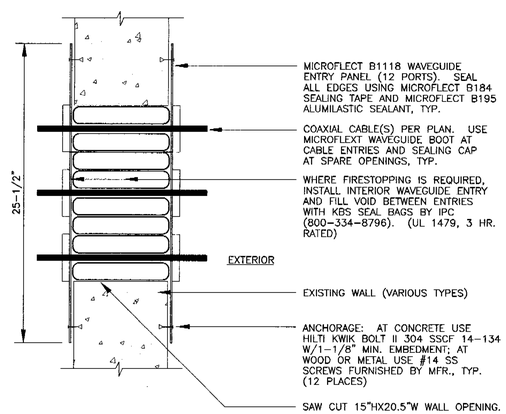

COAXIAL CABLE WAVE GUIDE

SCALE: NTS | 5

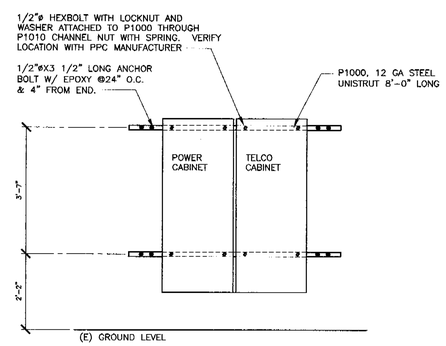

PPC MOUNTING DETAIL

SCALE: NTS | 4

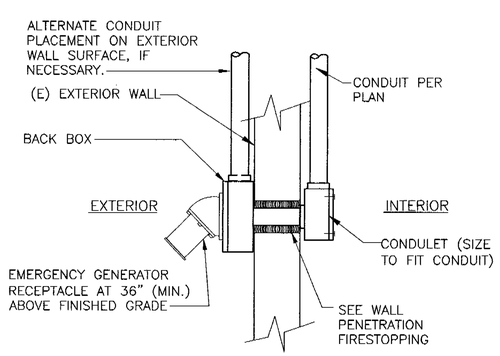

EMERGENCY GENERATOR RECEPTACLE

SCALE: NTS | 6

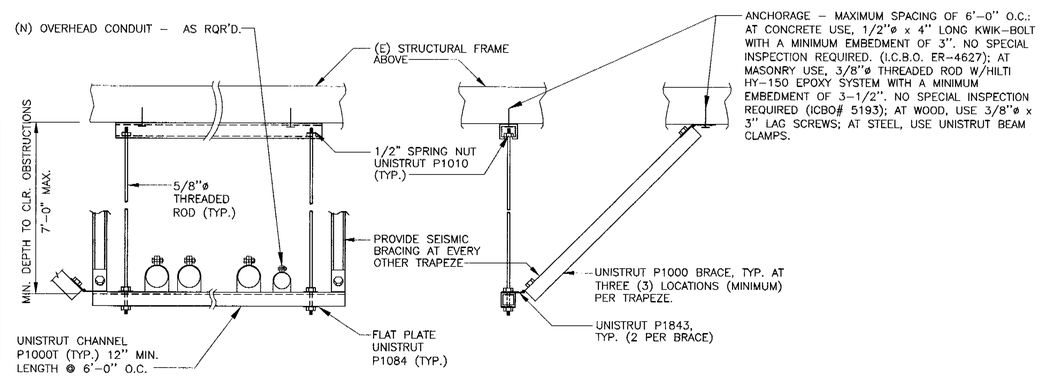

SUSPENDED POWER AND TELCO CONDUIT RACKS

SCALE: NTS | 2

MetroPCS Inc
1080 MARINA VILLAGE PARKWAY
FOURTH FLOOR
ALAMEDA, CA 94501
Phone: (510) 523-2610

DCI PACIFIC
ARCHITECTURE - ENGINEERING - PLANNING
5700 STONERIDGE MALL ROAD, #270
PLEASANTON, CA 94588
TEL: 925-730-4000 FAX: 925-730-4001

A&E PROJECT #SFA-142-B

ALL DRAWINGS AND WRITTEN MATERIAL CONTAINED HEREIN ARE THE PROPERTY OF ARCHITECT AND MAY NOT BE DUPLICATED, USED OR DISCLOSED WITHOUT THE WRITTEN CONSENT OF ARCHITECT.

SPACE RESERVED FOR PROFESSIONAL SEALS

RELEASE	
DATE	DESCRIPTION:
05/13/02	PLAN CHECK COMMENTS
04/24/02	100% CONSTRUCTION DRAWINGS
04/12/02	90% CONSTRUCTION DRAWINGS

REVISIONS		
NO.	DATE	
1		
2		
3		
4		
5		

THIS DRAWING IS COPYRIGHTED AND IS THE SOLE PROPERTY OF THE OWNER. IT IS PRODUCED SOLELY FOR USE BY THE OWNER AND ITS AFFILIATES. REPRODUCTION OR USE OF THIS DRAWING AND/OR THE INFORMATION CONTAINED IN IT IS FORBIDDEN WITHOUT THE WRITTEN PERMISSION OF THE OWNER.

DRAWN BY: BOK/JFY
CHECKED BY: DKD
APPROVED BY: DKD

SITE NAME

CHUCK E. CHEESE

SITE NUMBER

SFA-C08-142-B

SITE ADDRESS

2445 FONTAINE ROAD
SAN JOSE, CA 95121

SHEET TITLE

DETAILS

SHEET NUMBER

D2

05/20/2002