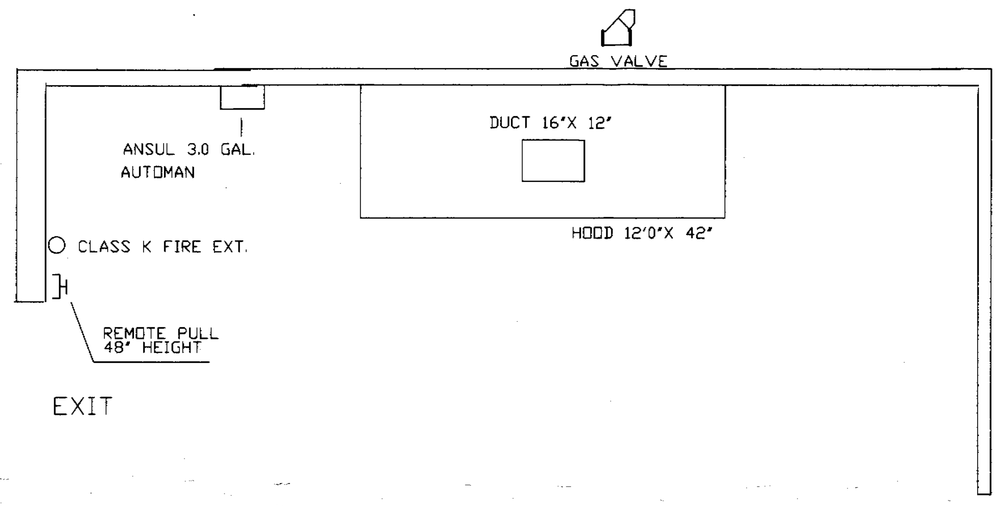

PARTIAL FLOOR PLAN | 1

ANSUL AUTOMAN DETAIL
(3.0 GALLON SYSTEM)

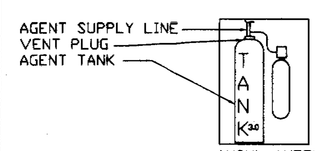

ANSUL AUTOMAN
SYSYTEM ACUTATION & EXPELLANT
(NOT TO SCALE)

REPLACED OLD DRY CHEMICAL SYSTEM WITH A NEW WET UL 300 STANDARD SYSTEM.

MEETS UL300 STANDARDS

FIRE SUPPRESSION SYSTEM DETAIL INFORMATION

SYSTEM TYPE: Ansul R-102 3.0 Gallon

COVERAGE: HOOD 12'0"X 42" DUCT 16"X 12"

QTY.	NOZZLE	MODEL NUMBER	TIP NUMBER	FLOW POINTS	TOTAL FLOW PTS.
1	DUCT	419337	2W	2	2
2	PLENUM	419335	1N	1	2
1	FRYER	419338	3N	3	3
TOTAL NOZZLE FLOW POINTS USED:					7
TOTAL NOZZLE FLOW POINTS AVAILBLE:					11
450 DEGREE TEMPERATURE LINKS:					2

ANSUL SYSTEM CHART | 2

V - FIRE SYSTEMS
LICENSE # C-16 779913
(909) 398-1591
FAX: 398-1595
P.O. BOX 3008
MONTCLAIR, CA. 91763

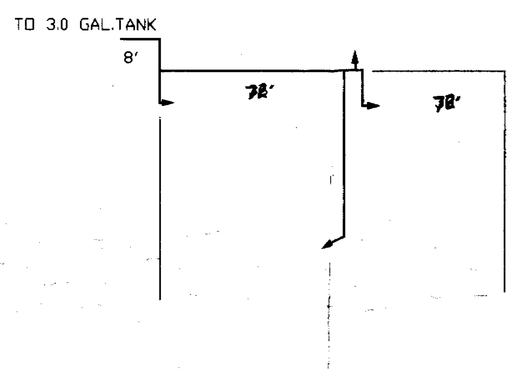

NOTES:
ALL PIPE SHALL BE 3/8" BLACK IRON SCHDULE 40

HANGERS SHALL BE 0" MINERALAC'S

EXPOSED PIPE SHALL BE CHROME PLATED.

PIPING SHALL BE RIGIDLY SUPPORTED TO PREVENT MOVEMENT.

PIPING LAYOUT | 3

SYSTEM INSTALLATION AND STORAGE

THE REGULATED RELEASE ASSEMBLY, REGULATED ACTUATOR ASSEMBLY, AND TANK ENCLOSURE MUST BE LOCATED AREAS WHERE THE AIR TEMPERATURE WILL NOT ALL BELOW 32 DEGREES F. OR EXCEED 130# DEGREES F.

1. MOUNT THE REGULATED RELEASE ASSEMBLY AND EACH REGULATED ACTUATOR ASSEMBLY REQUIRED BY COMPLETING THE FOLLOWING STEPS.

A. SELECT A RIGID SURFACE FOR MOUNTING THE ENCLOSURE. THE MOUNTING LOCATIONS MUST ALLOW THE REGULATED RELEASE ASSEMBLY AND THE REGULATED ACTUATOR ASSEMBLY TO BE WITHIN THE LIMITATION OF THE ACTUATION AND EXPELLANT GAS LINE LENGHTS AND MUST BE ABLE TO SUPPORT THE WEIGHT OF THE ASSEMBLY.

B. DETACH THE COVER FROM THE ENCLOSURE. REMOVE AGENT TANK FROM ENCLOSURE AND THE EXPELLANT GAS LINE HOSE FROM THE TANK & ADAPTOR ASSEMBLY.

C. SECURE ENCLOSURE BOX TO SELECTED MOUNTING LOCATION USING THE FOUR MOUNTING HOLES. USE APPROPRIATE TYPE OF FASTENERS DEPENDING ON THE MOUNTING SURFACE.

2. FIRE SUPPRESSION SYSTEM INSTALLATION WITH N.F.P.A. 17A 96, AND 1997 UNIFORM MECHANICAL CODE.

3. HOOD EXHAUST MUST REMAIN ON AND THE MAKE UP AIR SHALL SHUT DOWN WHEN FIRE SYSTEM IS ACTIVATED.

GENERAL NOTES | 4

REMOTE PULL STATION
4'-0" BOX WITH 1/2" KO'S POSITIONED AS SHOWN WITH ABS IN UPPER RIGHT AND LOWER LEFT OF BOX. TO BE 48" ABOVE FINISHED FLOOR. 1/2" EMT. TO BE 12" ABOVE FINISHED DROP CEILING LINE, WITHOUT BENDS OR OFFSETS. ONE 4'-0" BOX TO BE PROVIDED FOR EACH REMOTE PULL STATION.
WHEN TWO REMOTE PULLS ARE MOUNTED SIDE BY SIDE THE DISTANCE BETWEEN CENTERS SHELL BE NO LESS THEN 7"

GAS VALVE
MECHANIAL OR ELECTRICAL GAS VALVE IS TO BE INSTALLED BY PLUMBING CONTRACTOR.
PLUMBING PERMIT REQUIRED FOR GAS VALVE INSTALLATION.
THE GAS VALVE SHALL SHUT DOWN THE GAS SUPPLY TO APPLIANCES.

ELECTRIC SHUT OFF
ELECTRIC COOKING EQUIPMENT MUST BE SHUT OFF WHEN FIRE SYSTEM IS ACTIVATED.
ELECTRIC CONTRACTOR IS TO PROVIDE SHUT OFF CONTACTS OR SHUNT TRIP BREAKERS.
MICRO SWITCH FOR CENTRAL ALARM SYSTEM TO BE CONNECTED BY OTHERS.
ALL ELECTRICAL SUPPLY TO APPLIANCES SHALL SHUT DOWN WHEN SYSTEM IS ACTIVATED.

SYSTEM GUIDELINES
THE DESIGN OF FIRE SYSTEM SHALL COMPLY WITH S.M.A.C.N.A. GUIDELINES FOR SEISMIC RESTRAINTS OF MECHANICAL SYSTEMS.
O.S.H.P.D. APPROVED ANCHORAGE R-0010 SUPPORTS AND BRACING OF PIPE AND CONDUIT.

APPLICABLE TO LOCAL CODE:
FIRE ALARM SYSTEM MUST BE INTERCONNECTED TO THE ANSUL SYSTEM AND SHALL ACTIVATE WHEN THE FIRE SYSTEM IS ACTIVATED.

FIRE SUPPRESSION SYSTEM TEST:
THE CARTRIDGE TEST SHALL BE CONDUCTED IN FRONT OF DOWNEY FIRE INSPECTOR. TEST WILL BE CONDUCTED SIMULATING THE REMOTE PULL AND AUTOMATIC ACTUATION.

INSTALLTION NOTES | 5

JOB:
TACO BELL #1687
5431 CAMDEN
SAN JOSE, CA.

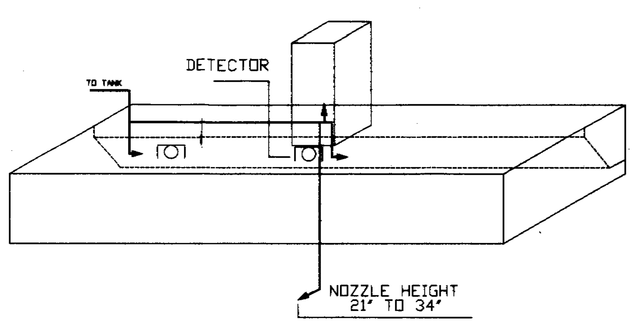

SINGLE BANK PLENUM
NOT TO EXCEED 20"
FILTER HEIGHT

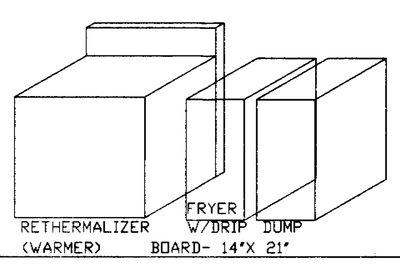

SYSTEM LAYOUT | 6

IF APPLICABLE, THE SYSTEM WILL BE MONITORED BY THE BUILDING'S FACP.

SAN JOSE FIRE DEPARTMENT
Approved as submitted subject to our requirements and inspections and NFPA 17A and 96
By: [signature] Date: 8.15.02

FILE COPY

DETECTOR	#56837
HIGH TEMPERATURE PULLY ELBOWS	#415671
U.L. APPROVED QUICK SEAL (3/8")	#77285
" " " " (1/2")	#77287
0.75 MECHANICAL GAS VALVE	#55598
1.0 " " "	#55601
1.25 " " "	#55604
1.50 " " "	#55607
2.0 " " "	#55610
2.5 " " "	#25937
3.0 " " "	#25938

ANSUL SYSTEM CERTIFIED
THIS ANSUL FIRE SYSTEM WAS ENGINEERED,DRAWN, AND CERTIFIED BY:
LOUIE RODRIGUEZ OF V-FIRE SYSTEMS
CERIFICATION NUMBER PR2-9243
EXPIRATION DATE: MAY 10, 2006

UL CHART & CERTIFICATION | 7

NO.	DRAWING NO.	DATE:
	TACO BELL	6/20/02

PAGE: