# *City of San Jose - Building Division - Index Cover*

Address 840 S. BASCOM AVE

PLAN CHECK # _____ PERMIT # (B E P M) 11-038158

Prepared By MD Page # _____ Date 12-1-11

| Category | Document Type | Sub Document Type |
|---|---|---|
| ☐ MP Tracts | ☐ PP Plot Plans | |
| | ☐ TP Tract Plans | ☐ BD Building<br>☐ PB Plumbing<br>☐ MM Mechanical<br>☐ EE Electrical |
| | ☐ TD Supporting Documents | |
| | ☐ TC Structural Calculations | |
| | ☐ TN Energy Calculations | |
| | ☐ TS Soils Report | |
| | ☐ TT Trusses/Shop Drawings | |
| | ☐ TM Tract Map | ☐ AR Addressed |
| ☑ PL Plans | ☐ PY Preliminary Plans | |
| | ☑ EP Plans | ☐ BL Building<br>☐ BP Plumbing<br>☑ BM Mechanical<br>☐ BE Electrical |
| | ☐ PM Parcel Map | |
| | ☐ AM Alternate Materials | |
| | ☐ SC Structural Calculations | |
| | ☐ EC Energy Calculations | |
| | ☐ SD Supporting Documents | |
| | ☐ SR Soils Report | |
| | ☐ TR Trusses/Shop Drawing | |
| | ☐ CR Copy Request | |
| ☐ PT Permits | ☐ AD Addressing | |
| | ☐ IN Inspection Notices | ☐ EP Expired |
| | ☐ PR Permits & Applications | ☐ CC Cash Receipts / Refunds<br>☐ CO C of O<br>☐ CP Correspondence<br>☐ EX Expired / Voided<br>☐ FI Finals<br>☐ IN Initial<br>☐ IS Initial – Supporting Doc's<br>☐ MR Meter Releases<br>☐ SI Special Inspection Reports |
| | ☐ CF Compliance Files | ☐ CN Compliance Notices<br>☐ RS Rescind<br>☐ SW Stop Work Orders |
| | ☐ DR Damage Reports | ☐ ED Earthquake Damage<br>☐ FD Flood Damage<br>☐ FA Fire/Auto Survey<br>☐ IV Investigation Survey |

Rev. 06/27/2008

W:\Data\Yum_TB\Y1022_San Jose_S Bascom_S286119\03_cd_current\000_1022_T1-0.dwg By: EALEXANDER Saved on: 8/22/2011 1:12:31 PM

ALL IDEAS, DESIGNS, ARRANGEMENTS AND PLANS INDICATED BY THIS DRAWING ARE OWNED BY, AND THE PROPERTY OF THIS OFFICE AND WERE CREATED, EVOLVED AND DEVELOPED FOR USE ON, AND IN CONNECTION WITH, THE SPECIFIED PROJECT. NONE OF SUCH IDEAS, DESIGNS, ARRANGEMENTS OR PLANS SHALL BE USED BY OR DISCLOSED TO ANY PERSON, FIRM OR CORPORATION FOR ANY PURPOSE WHATSOEVER WITHOUT THE WRITTEN PERMISSION OF PROJECT ARCHITECT. WRITTEN DIMENSIONS ON THESE DRAWINGS SHALL HAVE PRECEDENCE OVER SCALE DIMENSIONS. CONTRACTORS SHALL VERIFY AND BE RESPONSIBLE FOR, ALL DIMENSIONS AND CONDITIONS ON THE JOB AND THIS OFFICE MUST BE NOTIFIED OF ANY VARIATION FROM THE DIMENSIONS AND CONDITIONS SHOWN BY THESE DRAWINGS. SHOP DETAILS OF ADEQUATE SCALE MUST BE SUBMITTED TO THIS OFFICE FOR APPROVAL BEFORE PROCEEDING WITH FABRICATION ON ITEMS SO NOTED.

# TACO BELL

**TYO7_AUG09P**
**SITE #286119**
**ENTITY #395141**

# 840 S. BASCOM AVE.
# SAN JOSE, CA 95128
# APN 282-42-038

## GENERAL DRAWING SYMBOLS — H

| Symbol | Meaning |
|---|---|
| DETAIL CALLOUT | X - DETAIL NUMBER; AX.X - SHEET NUMBER |
| SECTION CALLOUT | X - SECTION NUMBER; AX.X - SHEET NUMBER |
| EXT. ELEVATION CALLOUT | X - ELEVATION NUMBER; AX.X - SHEET NUMBER |
| INT. ELEVATION CALLOUT | X - ELEVATION NUMBER; AX.X - SHEET NUMBER |
| SHEARWALL CALLOUT | X - SHEARWALL NUMBER; X'-X" - SHEARWALL LENGTH |
| ELEVATION | X'-X" - HEIGHT; XXXX- DESCRIPTION |
| CEILING CALLOUT | CL-X - CEILING TYPE; X'-X" - HEIGHT |
| ROOM | ROOM NAME |
| P-X | FINISH CALLOUT |
| X | KEY NOTE |
| X | WINDOW NUMBER / ARTWORK NUMBER |
| X | DOOR NUMBER |
| X | REVISION NUMBER |
| X-XXX | EQUIPMENT NUMBER |
| EQUIPMENT CALLOUT (M.E.P.) | XXX - EQUIPMENT; X - FIXTURE NUMBER |

REFER TO STRUCTURAL, MECHANICAL, PLUMBING, AND ELECTRICAL SHEETS FOR SPECIFIC SYMBOLS.

## VICINITY MAP — J

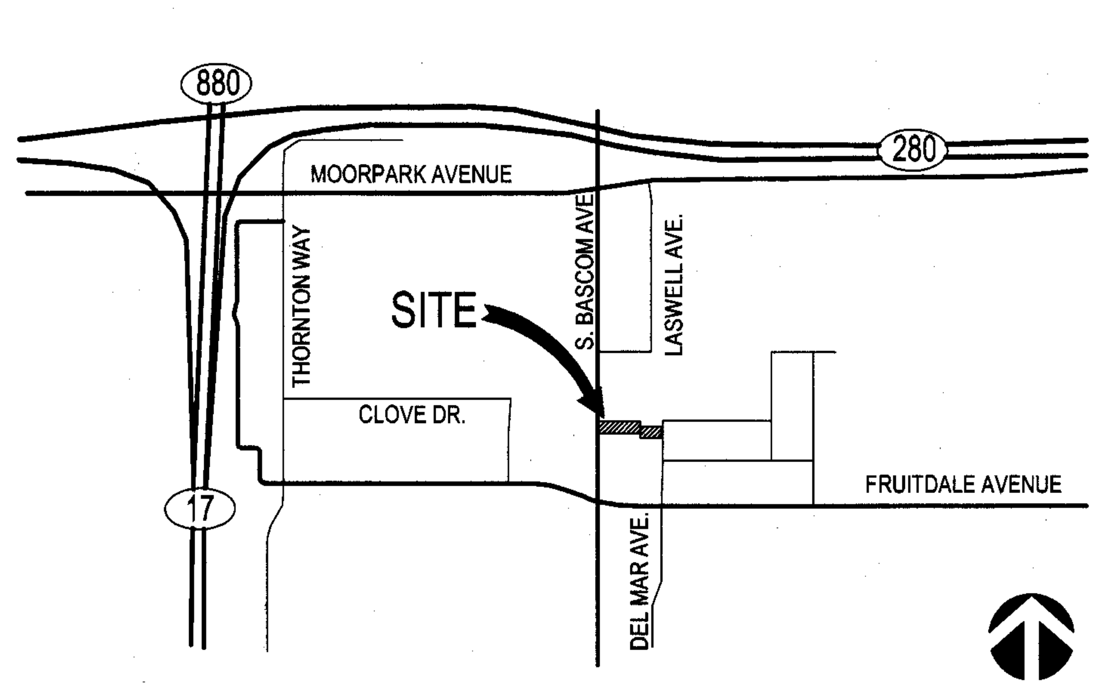


Printed on Recycled Paper at American Draft Source

## GENERAL NOTES — F

1. ALL WORK SHALL CONFORM TO THE 2010 CALIFORNIA BUILDING CODE (W/ AMENDMENTS) AND ALL OTHER APPLICABLE CODES, STANDARDS, AND REGULATIONS OF THE CITY OF SAN JOSE AND COUNTY OF SANTA CLARA.
2. A COMPLETE PROJECT IS INTENDED, THE BUILDING IS TO BE READY FOR OCCUPANCY WHEN COMPLETED.
3. THE GENERAL CONDITIONS OF THE CONTRACT FOR CONSTRUCTION (A.I.A. LATEST EDITION) ARE A PART OF THESE CONTRACT DOCUMENTS. A COPY IS ON FILE AT THE ARCHITECT'S OFFICE.
4. THIS BUILDING HAS BEEN DESIGNED TO COMPLY WITH THE CURRENT STATE NON-RESIDENTIAL ENERGY CONSERVATION STANDARDS. THESE COMPLIANCE FORMS ARE PART OF THE CONTRACT DOCUMENTS AND THE GENERAL CONTRACTOR IS RESPONSIBLE FOR CARRYING OUT SPECIFIED REQUIREMENTS.
5. DRAWING ARE BASED ON THE DESIGN SURVEY, DATED AUGUST 30, 2010, PREPARED BY SKW ASSOCIATES, INC. ARE INCLUDED AS PART OF THESE CONTRACT DOCUMENTS.
6. THIS BUILDING HAS BEEN DESIGNED IN ACCORDANCE WITH THE RECOMMENDATIONS OF THE GEOTECHNICAL INVESTIGATION REPORT, DATED SEPTEMBER 27, 2010, PREPARED BY NEIL O. ANDERSON ASSOCIATES, INC. THIS REPORT SHALL BE PART OF THE CONTRACT DOCUMENTS. THE GENERAL CONTRACTOR IS RESPONSIBLE FOR CARRYING OUT ITS RECOMMENDATIONS, THOUGH SOME MAY NOT BE SPECIFICALLY DETAILED ON THE PLANS, AND TAKE PRECEDENCE OVER PROJECT DRAWINGS AND SPECIFICATIONS UNLESS SPECIFICALLY MODIFIED, IN WRITING, BY THE GEOTECHNICAL ENGINEER.
7. DO NOT SCALE DRAWINGS. VERIFY ALL DIMENSIONS AND CONDITIONS AT THE SITE. ANY DISCREPANCIES IN THESE DRAWINGS SHALL BE BROUGHT TO THE ATTENTION OF THE ARCHITECT PRIOR TO STARTING WORK.
8. ALL PROPOSED SUBSTITUTIONS SHALL BE APPROVED BY THE CONSTRUCTION MANAGER/OWNER, IN WRITING, PRIOR TO BID SUBMITTAL AND INSTALLATION.
9. PER CBC SECTION 1707.3 PERIODIC SPECIAL INSPECTIONS MAY BE REQUIRED. REFER TO FOUNDATION PLAN FOR LIST OF REQUIRED SPECIAL INSPECTIONS. THE SPECIAL INSPECTOR SHALL BE SELECTED AND COMPENSATED BY OWNER, FROM THE PERMITTING AUTHORITY APPROVED LIST OF INSPECTORS. THE GENERAL CONTRACTOR SHALL BE RESPONSIBLE FOR COORDINATING INSPECTIONS. ALL TESTING AND INSPECTION REPORTS, INCLUDING FINAL REPORTS, SHALL BE PROVIDED TO THE PERMITTING AUTHORITY, PROJECT ARCHITECT AND OWNER PRIOR TO REQUESTING FINAL INSPECTION. THE GENERAL CONTRACTOR SHALL BE REQUIRED TO RECOMPENSE OWNER FOR ANY REINSPECTION DUE TO WORK NOT BEING READY OR NOT INSTALLED PER THE CONTRACT DOCUMENTS.
10. IN ADDITION TO REQUIRED SPECIAL INSPECTIONS THE GENERAL CONTRACTOR SHALL RETAIN THE PROJECT GEOTECHNICAL ENGINEER TO PROVIDE OBSERVATION AND TESTING SERVICES DURING THE BUILDING FOUNDATION AND UTILITY TRENCHES PHASES OF CONSTRUCTION AS RECOMMENDED IN THE SOILS REPORT. ALL TESTING AND INSPECTION REPORTS, INCLUDING FINAL REPORTS, SHALL BE PROVIDED TO THE PERMITTING AUTHORITY, PROJECT ARCHITECT AND OWNER PRIOR TO REQUESTING FINAL INSPECTION. THE GENERAL CONTRACTOR SHALL BE REQUIRED TO RECOMPENSE OWNER FOR ANY REINSPECTION DUE TO WORK NOT BEING READY OR NOT INSTALLED PER THE CONTRACT DOCUMENTS.
11. THE GENERAL CONTRACTOR SHALL CERTIFY PAD ELEVATION AND COMPACTION PRIOR TO THE START OF ANY WORK.
12. THE GENERAL CONTRACTOR IS RESPONSIBLE FOR SUBMITTAL, PAYMENT OF FEES AND OBTAINING ALL PERMITS ASSOCIATED WITH PROJECT EXCEPT GENERAL BUILDING PERMIT OR STATE HIGHWAY ENCROACHMENT PERMIT (IF APPLICABLE). THIS INCLUDES, BUT IS NOT LIMITED TO ELECTRICAL/ POS, MECHANICAL, PLUMBING, FIRE SPRINKLER, HOOD & ANSUL, OR OTHER RELATED FIRE PERMITS, ENCROACHMENT PERMITS, ETC. OWNER WILL PAY "CONNECTION FEES" ASSOCIATED WITH UTILITY PERMITS AND POST PERMIT RELATED BONDS AND REFUNDABLE DEPOSITS. THE GENERAL CONTRACTOR SHALL PAY TEMPORARY FACILITIES FEES & BONDS REQUIRED TO COMPLETE THE PROJECT WORK.
13. THE GENERAL CONTRACTOR SHALL COMPLY WITH ALL APPROVED PERMIT "CONDITIONS OF APPROVAL" RELATING TO THE CONSTRUCTION OF THIS PROJECT AND, IF APPLICABLE, SHALL COMPLETE ALL BUYER/ TENANT CONSTRUCTION RELATED OBLIGATIONS DESCRIBED IN THE REAL ESTATE AGREEMENT EXHIBIT(S). THESE CONDITIONS AND OBLIGATIONS SHALL BE CONSIDERED AS PART OF THESE CONTRACT DOCUMENTS.
14. THE REQUIRED MINIMUM CONCRETE STRENGTH, AT 28 DAYS, FOR ALL CONCRETE CONSTRUCTION SHALL BE MINIMUM fc' = 3,000 PSI FOR ALL CONCRETE CONSTRUCTION UNLESS SPECIFICALLY NOTED OTHERWISE IN THE PROJECT GEOTECHNICAL REPORT OR WITHIN THE STRUCTURAL DRAWINGS. NO SPECIAL INSPECTION REQUIRED.
15. THE GENERAL CONTRACTOR SHALL BE RESPONSIBLE FOR CONSTRUCTION METHODS AND MATERIALS, PROTECTING ALL EXISTING IMPROVEMENTS, PUBLIC SAFETY, SITE AND MATERIALS SECURITY, AND CONSTRUCTION OF THE BUILDING IN ACCORDANCE WITH APPROVED PLANS AND PERMIT.
16. DEFERRED SUBMITTALS, DRAWINGS & CALCULATIONS THE GENERAL CONTRACTOR SHALL SUBMIT TO THE PROJECT ARCHITECT/ ENGINEER OF RECORD THE FOLLOWING DEFERRED SUBMITTALS FOR REVIEW. NO WORK RELATED TO A DEFERRED SUBMITTAL SHALL COMMENCE UNTIL SUCH DEFERRED SUBMITTAL HAS BEEN REVIEWED BY PROJECT ARCHITECT/ ENGINEER AND APPROVED BY THE CITY:
   A. TRUSSES -
   THE GENERAL CONTRACTOR SHALL SUBMIT 5 WET STAMPED/SIGNED COPIES OF THE TRUSS SUBMITTAL PACKAGE TO THE PROJECT ARCHITECT/ENGINEERING FOR REVIEW AND COMMENT. AFTER REVIEW THE ARCHITECT/ENGINEER SHALL PLACE A "REVIEWED" STAMP ON THE TITLE SHEET OF THE TRUSS PACKAGE AND FORWARD 4 COPIES BACK TO THE GENERAL CONTRACTOR FOR SUBMITTAL OF THE "REVIEWED" TRUSS PACKAGE TO THE BUILDING DEPARTMENT FOR APPROVAL.
   REFER TO STRUCTURAL DRAWINGS FOR SPECIFIC TRUSS DESIGN AND SUBMITTAL REQUIREMENTS THE PROJECT ARCHITECT OR ENGINEER OF RECORD IS RESPONSIBLE FOR REVIEWING OF ALL SUBMITTAL DOCUMENTS PREPARED BY TRUSS MANUFACTURER.
   B. HOOD FIRE SUPPRESSION SYSTEM-
   DESIGN FOR THE HOOD SUPPRESSION SYSTEM SHALL BE SUBMITTED TO AND REVIEWED BY THE FIRE DEPARTMENT PRIOR TO FABRICATION AND INSTALLATION.
   A SEPARATE PERMIT IS REQUIRED FOR HOOD/ ANSUL SYSTEMS. ANSUL INSTALLER SHALL PROVIDE PLANS FOR REVIEW & APPROVAL TO THE LOCAL FIRE PREVENTION DISTRICT.
   C. WALK-IN COOLER AND FREEZER-
   WALK-IN COOLER AND FREEZER SHALL BE DESIGNED AND SUBMITTED FOR REVIEW AND APPROVAL PER SAN JOSE PCN #27.
17. THE GENERAL CONTRACTOR SHALL CONFIRM THE AVAILABLE 'RESIDUAL' WATER PRESSURE, PRIOR TO THE START OF ANY WORK, AND NOTIFY THE OWNER IF THE AVAILABLE PRESSURE IS NOT ADEQUATE TO SERVICE THE ANSUL SYSTEM OR OTHER PRESSURE SENSITIVE EQUIPMENT.
18. SIGNAGE AND NEON SHALL BE APPLIED FOR, BY THE OWNER'S VENDOR, UNDER A SEPARATE PERMIT APPLICATION. THE GENERAL CONTRACTOR SHALL BE RESPONSIBLE FOR THE INSTALLATION OF ANY REQUIRED BLOCKING, ELECTRICAL AND CONCRETE FOOTINGS.

## SCOPE OF WORK — G

DEMOLISH EXISTING TACO BELL RESTAURANT WITH DRIVE-THRU LANE AND INDOOR DINING. DEMOLISH EXISTING EXTERIOR TRASH ENCLOSURE. RETAIN AND PROTECT EXISTING MATURE TREES AT FRONT AND REAR OF SITE. CONSTRUCT NEW 2,700 S.F. TACO BELL RESTAURANT WITH DRIVE-THRU LANE AND INDOOR DINING. CONSTRUCT NEW EXTERIOR TRASH ENCLOSURE. REPLACE IMMEDIATE PAVING AROUND BUILDING, AND AT THE EXISTING DRIVE THRU LANE. MAJORITY OF (E) PARKING LOT SHALL BE RETAINED WHERE POSSIBLE AND USED IN THE NEW CONSTRUCTION. (E) PARKING LOT SHALL BE RE-STRIPED AS INDICATED.

| | |
|---|---|
| EXISTING GROSS BUILDING AREA: | 3,346 SQUARE FEET |
| PROPOSED GROSS BUILDING AREA: | 2,731 SQUARE FEET |
| EXISTING NET BUILDING AREA: | 2,844 SQUARE FEET |
| PROPOSED NET BUILDING AREA: | 2,321 SQUARE FEET |
| EXISTING PARKING SPACES: | 39 SPACES ON SITE |
| PROPOSED PARKING SPACES: | 34 SPACES ON SITE |
| PARKING REQUIRED: | 1 SPACE PER 40 SQUARE FEET OF DINING AREA = 855 / 40 = 21 SPACES |
| | 1 SPACE PER 2.5 SEATS (RESTAURANT) = 62 / 2.5 = 24.8 SPACES = 25 SPACES |
| DRIVE THRU STACK: | 8 CARS |
| TOTAL ACREAGE: | 100% 34,205 SQUARE FEET |
| PROPOSED BUILDING COVERAGE: | 7.9 % (2,731 SQUARE FEET) |
| PROPOSED HARDSCAPE COVERAGE: | 51.8% (17,734 SQ' PARKING) |
| | 3.6% (1,227 SQ' PATHS/SIDEWALKS) |
| | 0.6% (216 SQ' TRASH) |
| | 4.8% (1,580 SQ' PERMEABLE PAVERS) |
| PROPOSED LANDSCAPING COVERAGE: | 31.3% (10,717 SQUARE FEET) |

## PROJECT SUMMARY — B

| | | |
|---|---|---|
| APN: | 282-42-038 | |
| ADDRESS: | 840 S. BASCOM AVENUE, SAN JOSE, CA 95128-2605 | |
| ZONING: | CN NEIGHBORHOOD COMMERCIAL DISTRICT | |
| BUILDING CODES: | 2010 CALIFORNIA BUILDING CODE, | 2010 CALIFORNIA PLUMBING CODE |
| | 2010 CALIFORNIA MECHANICAL CODE, | 2010 CALIFORNIA ELECTRICAL CODE |
| | 2010 CALIFORNIA EXISTING BUILDING CODE, | 2010 CALIFORNIA BLDG ENERGY EFFICIENCY STDS |
| BUILDING AREA: | 2,321 SQUARE FEET (EXTERIOR FACE OF STUD OF HABITABLE SPACE) | |
| | ALLOWABLE AREA (TABLE 503): 6000 S.F., GROUP A-2 TYPE VB | |
| CONSTRUCTION TYPE: | MAIN BUILDING: VB NON-SPRINKLERED | TRASH ENCLOSURE: VB NON-SPRINKLERED |
| SEISMIC DESIGN: | CATEGORY D OR E | |
| WIND SPEED: | 85 MPH | |
| SOIL BEARING PRESSURE: | 2,000 POUNDS PER SQUARE FOOT - SEE SOILS REPORT | |
| OCCUPANCY: | MAIN BUILDING: "A2" | TRASH ENCLOSURE: "U" |
| SEATING: | MAIN BUILDING: 62 PERSONS | TRASH ENCLOSURE: 0 |
| OCCUPANT LOAD (CBC 1004.1.1): SEE SHEET A1.2 | TOTAL 89 PERSONS | |
| DINING | 82 | |
| KITCHEN / OFFICE | 7 | |

## PRIOR DEVELOPMENT PERMITS — C

| DATE | FILE NUMBER | APPLICATION TYPE | DEPARTMENT | STATUS |
|---|---|---|---|---|
| 7/29/1992 | AD92-506 | PERMIT ADJUSTMENT | PLANNING | APPROVED |
| 7/22/1992 | AD92-581 | SIGN PERMIT | PLANNING | APPROVED |
| 2/15/2002 | AD02-175 | SIGN PERMIT | PLANNING | APPROVED |
| 6/28/1993 | CP93-030 | CONDITIONAL USE PERMIT | PLANNING | APPROVED |
| 2/4/1986 | H86-021 | SITE PERMIT | PLANNING | APPROVED |
| 12/13/2010 | C10-024 | REZONE | PLANNING | APPROVED |
| 5/11/2011 | CP10-060 | CONDITIONAL USE PERMIT | PLANNING | APPROVED |
| 2002 | 051288 FE | FIRE ENG. FIXED EXTING. SYSTEMS | FIRE PREVENTION | CLOSED |
| **2011** | **018000 CI** | **BUILDING PERMIT** | **BUILDING** | **WORKING** |
| 2002 | 036538 CI | SIGN PERMIT | BUILDING | EXPIRED |
| 1996 | 067152 CI | COMM./INDUST. ADD./ALT. | BUILDING | FINALED |
| 1992 | 032312 BD | BUILDING PERMIT | BUILDING | CLOSED |
| 1992 | 065651 BD | BUILDING PERMIT | BUILDING | CLOSED |
| 1992 | 087205 BD | BUILDING PERMIT | BUILDING | CLOSED |
| 1992 | 114201 BD | BUILDING PERMIT | BUILDING | FINALED |
| 1992 | 005174 BD | BUILDING PERMIT | BUILDING | FINALED |
| 1992 | 005235 BD | BUILDING PERMIT | BUILDING | FINALED |
| 1992 | 002899 CI | COMM./INDUST. TECH. REVIEW | BUILDING | - |
| 1992 | 066212 BD | BUILDING PERMIT | BUILDING | CLOSED |
| 1992 | 002660 CI | COMM./INDUST. TECH. REVIEW | BUILDING | - |
| 1986 | 026351 BD | BUILDING PERMIT | BUILDING | CLOSED |
| 1986 | 056380 BD | BUILDING PERMIT | BUILDING | FINALED |
| 1985 | 047218 BD | BUILDING PERMIT | BUILDING | CLOSED |
| 1985 | 072671 BD | BUILDING PERMIT | BUILDING | CLOSED |
| 1985 | 036348 BD | BUILDING PERMIT | BUILDING | CLOSED |
| 1985 | 036234 BD | BUILDING PERMIT | BUILDING | CLOSED |
| 1985 | 017678 BD | BUILDING PERMIT | BUILDING | CLOSED |
| 1985 | 035849 BD | BUILDING PERMIT | BUILDING | CLOSED |
| 1985 | 071735 BD | BUILDING PERMIT | BUILDING | CLOSED |
| 1985 | 017193 BD | BUILDING PERMIT | BUILDING | CLOSED |
| 1985 | 047713 BD | BUILDING PERMIT | BUILDING | CLOSED |
| 1985 | 071226 BD | BUILDING PERMIT | BUILDING | CLOSED |
| 1984 | 047218 BD | BUILDING PERMIT | BUILDING | FINALED |
| 1954 | 020220 BD | BUILDING PERMIT | BUILDING | CLOSED |

## PROJECT DIRECTORY — D

**OWNER/ CLIENT**
TACO BELL CORP.
1 Glen Bell Way, MD 534
Irvine, CA 92618
CONTACT: Steve Pulcheon
PHONE: (949) 863-3864

**ARCHITECT**
VMI ARCHITECTURE, INC.
637 5th Street
San Rafael, CA 94901
CONTACT: ELDRICK ALEXANDER
PHONE: (415) 451-2500

**GEOTECHNICAL ENGINEER**
NEIL O. ANDERSON ASSOCIATES, INC.
50 Goldenland Court, Suite 100
Sacramento, CA 95834
CONTACT: Robert Holmer
PHONE:(916) 928-4690

**CIVIL ENGINEER**
SKW & ASSOCIATES
2237 Scenic Drive
Modesto, CA 95355
CONTACT: Allan Stevenson
PHONE: (209) 840-4588

**STRUCTURAL ENGINEER**
SKW & ASSOCIATES
2237 Scenic Drive
Modesto, CA 95355
CONTACT: Allan Stevenson
PHONE: (209) 840-4588

**LANDSCAPE ARCHITECT**
KIRK MORTON LANDSCAPING
37357 Niles Blvd
Fremont, CA 94536
CONTACT: Kirk Morton
PHONE: (510) 792-9193

**MECH/ PLMBG/ ELEC ENGINEER**
VMI ARCHITECTURE, INC.
637 5th Street
San Rafael, CA 94901
CONTACT: ELDRICK ALEXANDER
PHONE: (415) 451-2500

## CITY/ UTILITY CONTACTS — E

**ELECTRIC & GAS**
PG&E
308 Stockton Avenue
San Jose, CA 95126
CONTACT: Sharon Kennedy
PHONE: (408) 299-1053

**WATER**
SAN JOSE WATER COMPANY
1221 S. Bascom Ave.
San Jose, CA 95121
CONTACT: Wanda Folk
PHONE: (408) 279-7879

**TELEPHONE**
AT&T
3475-B North 1st Street, Room 200
San Jose, CA 95134
CONTACT: Randall Kuersten
PHONE: (408) 493-7073

**SEWER**
CITY OF SAN JOSE PUBLIC WORKS
200 E. Santa Clara Street
San Jose, CA 95113
CONTACT: -
PHONE: (408) 535-7645

**HEALTH**
SANTA CLARA COUNTY DEPT. OF ENVIRONMENTAL HEALTH
1555 Berger Drive, Building #2, 3rd Floor
San Jose, CA 95112
CONTACT: Ernie Wong
PHONE: (408) 918-3400

**PLANNING**
CITY OF SAN JOSE PLANNING, BUILDING & CODE ENFORCEMENT
200 E. Santa Clara Street
San Jose, CA 95113
CONTACT: LESLEY XAVIER
PHONE: (408) 535-7652

**BUILDING**
CITY OF SAN JOSE PLANNING, BUILDING & CODE ENFORCEMENT
200 E. Santa Clara Street
San Jose, CA 95113
CONTACT: -
PHONE: -

**FIRE**
CITY OF SAN JOSE FIRE
200 E. Santa Clara Street
San Jose, CA 95113
CONTACT: Ed Munyak
PHONE: (408) 535-7750

## SHEET INDEX — A

| Sheet | Title | 1 | 2 | 3 | 4 | 5 | 6 | 7 | 8 |
|---|---|---|---|---|---|---|---|---|---|
| **TITLE/SITE** | | | | | | | | | |
| T1.0 | TITLE SHEET | | 2 | | | | | | |
| T24.0 | TITLE 24 | | | | | | | | |
| T24.1 | TITLE 24 | | | | | | | | |
| T24.2 | TITLE 24 | | | | | | | | |
| T24.3 | TITLE 24 | | | | | | | | |
| T24.4 | TITLE 24 | | 2 | | | | | | |
| COA-1 | CONDITIONS OF APPROVAL | | | | | | | | |
| COA-2 | CONDITIONS OF APPROVAL & CENTER PLAN | | | | | | | | |
| ADA-1 | DISABLED ACCESSIBILITY GENERAL NOTES | | | | | | | | |
| ADA-2 | DISABLED ACCESSIBILITY EXTERIOR DETAILS | | | | | | | | |
| ADA-3 | DISABLED ACCESSIBILITY INTERIOR DETAILS | | | | | | | | |
| 1 of 2 | SURVEY (DATED 08/26/10) | | | | | | | | |
| 2 of 2 | SURVEY (DATED 08/26/10) | | | | | | | | |
| **CIVIL** | | | | | | | | | |
| C1.0 | COVER SHEET | | | | | | | | |
| C1.1 | NOTES | | | | | | | | |
| C2.0 | DEMOLITION PLAN | | | | | | | | |
| C3.0 | GRADING AND DRAINAGE PLANS | | | | | | | | |
| C3.1 | ENLARGED GRADING PARTIAL PLANS | | | | | | | | |
| C4.0 | UTILITY PLAN | | | | | | | | |
| C5.0 | HORIZONTAL CONTROL PLAN | | | | | | | | |
| C6.0 | EROSION CONTROL PLAN | | | | | | | | |
| **LANDSCAPE** | | | | | | | | | |
| L1.0 | IRRIGATION PLAN | | | | | | | | |
| L1.1 | IRRIGATION DETAILS | | | | | | | | |
| L2.0 | PLANTING PLAN | | | | | | | | |
| L2.1 | PLANTING DETAILS | | | | | | | | |
| L4.0 | DRIP DETAILS | | | | | | | | |
| **STRUCTURAL** | | | | | | | | | |
| S1.0 | FOUNDATION PLAN | | 2 | | | | | | |
| S1.1 | NOT USED | | 2 | | | | | | |
| S2.0 | WALL FRAMING PLAN | | 2 | | | | | | |
| S3.0 | ROOF FRAMING PLAN | | 2 | | | | | | |
| S4.0 | STRUCTURAL DETAILS (FOUNDATION) | | 2 | | | | | | |
| S4.1 | STRUCTURAL DETAILS (FRAMING) | | 2 | | | | | | |
| S4.2 | STRUCTURAL DETAILS (ROOF) | | 2 | | | | | | |
| S4.3 | STRUCTURAL DETAILS (FRONT TACO BELL TOWER) | | 2 | | | | | | |
| S4.4 | STRUCTURAL DETAILS (SIDE TACO BELL TOWER) | | 2 | | | | | | |
| S5.0 | CANOPY & AWNING BLOCKING ELEVATION | | 2 | | | | | | |
| **VENDOR BUILDING ELELEMTS** | | | | | | | | | |
| VE-1 | VENDOR BUILDING ELEMENTS | | | | | | | | |
| VE-2 | VENDOR BUILDING ELEMENTS | | | | | | | | |
| **ARCHITECTURAL** | | | | | | | | | |
| A0.0 | SITE PLAN | | 2 | | | | | | |
| A0.1 | SITE DETAILS | | | | | | | | |
| A0.2 | SITE DETAILS | | 2 | | | | | | |
| A0.3 | SITE DETAILS | | 2 | | | | | | |
| A0.4 | SITE DETAILS | | | | | | | | |
| A1.0 | FLOOR PLAN | | 2 | | | | | | |
| A1.1 | DOOR ELEVATIONS & SCHEDULE, WINDOW ELEVATIONS & SCHEDULES | | 2 | | | | | | |
| A1.2 | OCCUPANCY CALCULATION | | 2 | | | | | | |
| A2.0 | EQUIPMENT PLAN, SEATING PLAN & SCHEDULE | 1 | 2 | | | | | | |
| A2.1 | EQUIPMENT SCHEDULE | 1 | 2 | | | | | | |
| A2.2 | DUAL-LINE SPECIFICATIONS | | | | | | | | |
| A3.0 | ROOF PLAN | | 2 | | | | | | |
| A4.0 | EXTERIOR ELEVATIONS | | 2 | | | | | | |
| A4.1 | EXTERIOR ELEVATIONS | | 2 | | | | | | |
| A4.2 | PARAPET DETAILS | | | | | | | | |
| A5.0 | WALL SECTIONS - TYPICAL PARAPET | | | | | | | | |
| A5.1 | WALL SECTIONS - TOWER WALL SECTIONS | | | | | | | | |
| A5.2 | WALL SECTIONS - TOWER WALL SECTIONS | | 2 | | | | | | |
| A5.3 | NOT USED | | | | | | | | |
| A5.4 | NOT USED | | | | | | | | |
| A6.0 | CONSTRUCTION DETAILS - ROOF | | | | | | | | |
| A6.1 | CONSTRUCTION DETAILS - DOORS, WINDOWS | | 2 | | | | | | |
| A6.2 | CONSTRUCTION DETAILS - WALLS, DOORS, WINDOWS | | | | | | | | |
| A6.3 | CONSTRUCTION DETAILS - WALLS | | | | | | | | |
| A6.4 | CONSTRUCTION DETAILS - INTERIOR | | 2 | | | | | | |
| A6.5 | CONSTRUCTION DETAILS - FINISH DETAILS | 1 | | | | | | | |
| A7.0 | FLOOR FINISH PLAN | | 2 | | | | | | |
| A7.1 | REFLECTED CEILING PLAN | | 2 | | | | | | |
| A7.2 | FINISH SCHEDULE | | 2 | | | | | | |
| A8.0 | INTERIOR ELEVATIONS - DINING ROOM | | 2 | | | | | | |
| A8.1 | INTERIOR ELEVATIONS - ENLARGED TOILET ROOMS PLAN & OFFICE PLANS | | 2 | | | | | | |
| A8.2 | INTERIOR ELEVATIONS - KITCHEN | 1 | 2 | | | | | | |
| A8.3 | INTERIOR ELEVATIONS - KITCHEN | | 2 | | | | | | |
| **MECHANICAL** | | | | | | | | | |
| M1.0 | MECHANICAL SCHEDULES AND NOTES | | 2 | | | | | | |
| M2.0 | DUCT AND DIFFUSER PLAN | | 2 | | | | | | |
| M2.1 | MECHANICAL ROOF PLAN | | 2 | | | | | | |
| M3.0 | HOOD EXHAUST PLANS AND SECTIONS | | 2 | | | | | | |
| M3.1 | HOOD FIRE SUPPRESSION DETAILS | | 2 | | | | | | |
| M4.0 | MECHANICAL AND HOOD DETAILS | | 2 | | | | | | |
| M5.0 | TITLE 24 CALCS | | 2 | | | | | | |
| M5.1 | TITLE 24 CALCS | | 2 | | | | | | |
| **PLUMBING** | | | | | | | | | |
| P1.0 | PLUMBING SCHEDULES AND NOTES | 1 | 2 | | | | | | |
| P2.0 | WASTE AND VENT PLAN | 1 | 2 | | | | | | |
| P3.0 | WATER AND GAS PLAN | 1 | 2 | | | | | | |
| P4.0 | PLUMBING ROUGH-IN PLAN | | 2 | | | | | | |
| P5.0 | RISER DIAGRAMS | 1 | | | | | | | |
| P6.0 | PLUMBING DETAIL | | 2 | | | | | | |
| **ELECTRICAL** | | | | | | | | | |
| E1.0 | SITE ELECTRICAL PLAN (FOR REFERENCE ONLY) | | 2 | | | | | | |
| E2.0 | RISER DIAGRAM AND RISER LEGEND | | | | | | | | |
| E2.1 | PANEL SCHEDULES AND LOAD SUMMARY | | 2 | | | | | | |
| E3.0 | POWER FLOOR PLAN | | 2 | | | | | | |
| E3.1 | ENLARGED POWER PLAN AND DETAILS | | 2 | | | | | | |
| E3.2 | POWER ROOF PLAN | | 2 | | | | | | |
| E4.0 | LIGHTING PLAN AND LIGHTING FIXTURE SCHEDULE | | 2 | | | | | | |
| E5.0 | COMMUNICATIONS PLAN | | 2 | | | | | | |
| E6.0 | ELECTRICAL DETAILS | | 2 | | | | | | |
| E7.0 | TITLE 24 CALCS | | 2 | | | | | | |
| E7.1 | TITLE 24 CALCS | | 2 | | | | | | |
| **SCOPE OF WORK & SPECIFICATIONS** | | | | | | | | | |
| IN BOOK FORMAT | | | | | | | | | |

APPROVED
City of San Jose Building Division
☐ Building ☐ Plumbing/Mechanical
☐ Electrical ☐ Zoning
GARY VAN WEGEN (408) 277-8185
Plan No. ________ Date: 8/30/11

VMI architecture
Design · Planning · Interiors
637 5th Avenue San Rafael, CA 94901
415-451-2500 415-451-2595 fax
www.vmarch.com

VMI JOB NUMBER
Y1022

LICENSED ARCHITECT ... STATE OF CALIFORNIA

RECORD DATES

| | |
|---|---|
| DD SUBMITTAL | 10-21-10 |
| BLDG SUBMITTAL | 6-10-11 |
| BID SET | - |
| CONTRACT SET | - |

REVISIONS
2 08/24/11 PC Comments/ Plan Updates

CLIENT
TACO BELL CORP
1 GLEN BELL WAY, MD# 534
IRVINE, CA 92618

SITE #286119

PROJECT
TACO BELL
840 S. Bascom Avenue
San Jose, CA 95128-2605
APN #282-42-038

TY07_AUG09P

TITLE SHEET
# T1.0

PERMIT FILE # CP10-060

#11018000 P/M OFFICE

W:\Data\Yum_TBY1022_San Jose_S Bascom_S286119\03_cd_current\042_1022_A0-0.dwg By: EALEXANDER Saved on: 8/2/2011 4:37:40 PM

ALL IDEAS, DESIGNS, ARRANGEMENTS AND PLANS INDICATED BY THIS DRAWING ARE OWNED BY, AND THE PROPERTY OF THIS OFFICE AND WERE CREATED, EVOLVED AND DEVELOPED FOR USE ON, AND IN CONNECTION WITH, THE SPECIFIED PROJECT. NONE OF SUCH IDEAS, DESIGNS, ARRANGEMENTS OR PLANS SHALL BE USED BY OR DISCLOSED TO ANY PERSON, FIRM OR CORPORATION FOR ANY PURPOSE WHATSOEVER WITHOUT THE WRITTEN PERMISSION OF PROJECT ARCHITECT. WRITTEN DIMENSIONS ON THESE DRAWINGS SHALL HAVE PRECEDENCE OVER SCALE DIMENSIONS; CONTRACTORS SHALL VERIFY AND BE RESPONSIBLE FOR ALL DIMENSIONS AND CONDITIONS ON THE JOB AND THIS OFFICE MUST BE NOTIFIED OF ANY VARIATION FROM THE DIMENSIONS AND CONDITIONS SHOWN BY THESE DRAWINGS. SHOP DETAILS OF ADEQUATE SCALE MUST BE SUBMITTED TO THIS OFFICE FOR APPROVAL BEFORE PROCEEDING WITH FABRICATION ON ITEMS SO NOTED.

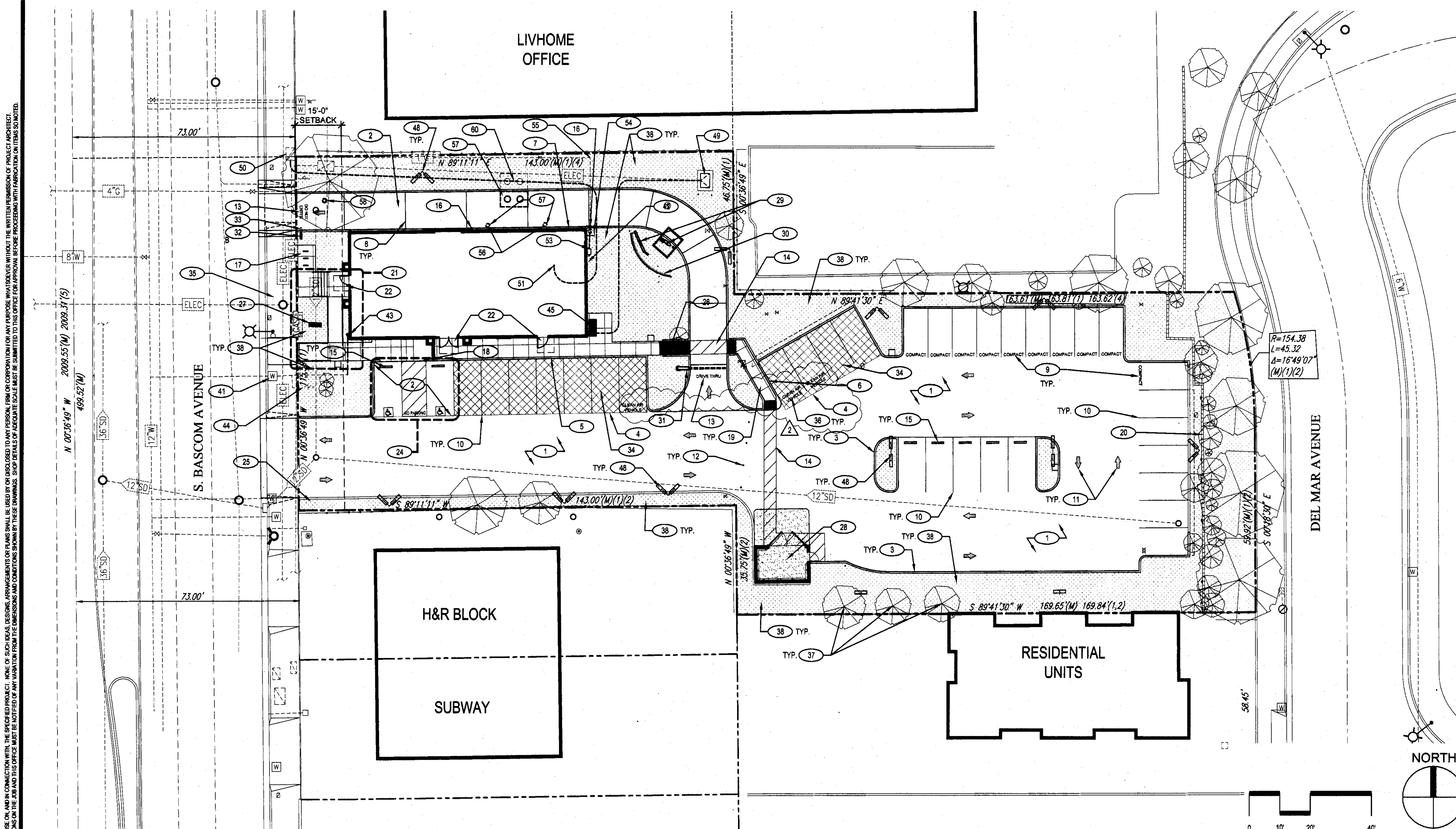


## ARCHITECTURAL SITE PLAN 1" = 20'-0" A

1. REQUIRED PERMITS AND APPROVALS HAVE BEEN OBTAINED. NO CONSTRUCTION OR FABRICATION SHALL BEGIN UNTIL THE CONTRACTOR HAS RECEIVED AND THOROUGHLY REVIEWED ALL PLANS AND OTHER DOCUMENTS APPROVED BY ALL OF THE PERMITTING AUTHORITIES.
2. ALL WORK SHALL BE PERFORMED IN ACCORDANCE WITH THESE PLANS, SPECIFICATIONS AND THE REQUIREMENTS AND STANDARDS OF THE LOCAL GOVERNING AUTHORITY. THE SOILS REPORT AND RECOMMENDATIONS SET FORTH THEREIN ARE A PART OF THE REQUIRED CONSTRUCTION DOCUMENTS AND TAKE PRECEDENCE UNLESS SPECIFICALLY NOTED OTHERWISE ON THE PLANS. THE CONTRACTOR SHALL NOTIFY THE CONSTRUCTION MANAGER OF ANY DISCREPANCY BETWEEN THE SOILS REPORT AND PLANS, ETC.
3. DEMOLITION AND SITE CLEARING: SEE S.M.L. DRAWINGS AND GEOTECHNICAL REPORT FOR EXTENT OF SITE DEMOLITION. THIS WORK SHALL INCLUDE REMOVAL OF ALL EXISTING PAVEMENTS, CURBS (U.O.N.), LIGHT POLES (INCLUDING FOOTINGS), VEGETATION (INCLUDING STUMPS), UTILITIES (NOT OTHERWISE REUSED) OR OTHER SUBSTRUCTURES AS REQUIRED FOR NEW CONSTRUCTION.
4. SITE GRADING SHALL BE PERFORMED IN ACCORDANCE WITH THESE PLANS AND SPECIFICATIONS AND THE RECOMMENDATIONS SET FORTH IN THE SOILS REPORT REFERENCED IN THIS PLAN SET. THE CONTRACTOR SHALL BE RESPONSIBLE FOR REMOVING AND REPLACING ALL SOFT, YIELDING OR UNSUITABLE MATERIALS AND REPLACING WITH SUITABLE MATERIALS AS SPECIFIED IN THE SOILS REPORT. ALL EXCAVATED OR FILLED AREAS SHALL BE COMPACTED AND MOISTURE CONDITIONED AS SPECIFIED IN THE SOILS REPORT. CONTRACTOR SHALL SUBMIT A COMPACTION REPORT PREPARED BY A QUALIFIED SOILS ENGINEER, REGISTERED WITHIN THE STATE WHERE THE WORK IS PERFORMED, VERIFYING THAT ALL FILLED AREAS AND SUBGRADE AREAS WITHIN THE BUILDING PAD AREA AND AREAS TO BE PAVED HAVE BEEN COMPACTED IN ACCORDANCE WITH THESE PLANS AND SPECS, AND THE RECOMMENDATIONS SET FORTH IN THE SOILS REPORT.
5. THE A.L.T.A. SURVEY SHALL BE CONSIDERED A PART OF THESE PLANS. THE G.C. IS RESPONSIBLE FOR LOCATING IMPROVEMENTS PER THESE PLANS.
6. THE LOCATIONS OF UNDERGROUND FACILITIES SHOWN ON THESE PLANS ARE BASED ON FIELD SURVEYS AND LOCAL UTILITY COMPANY RECORDS. IT SHALL BE THE CONTRACTOR'S FULL RESPONSIBILITY TO CONTACT THE APPROPRIATE UTILITY COMPANY. NO COMPENSATION SHALL BE PAID TO THE CONTRACTOR FOR DAMAGE AND REPAIR TO THESE FACILITIES CAUSED BY HIS WORK FORCE.
7. ALL DIMENSIONS AND GRADES SHOWN ON THE PLANS SHALL BE FIELD VERIFIED BY THE CONTRACTOR PRIOR TO CONSTRUCTION. CONTRACTOR SHALL NOTIFY THE CONSTRUCTION MANAGER IF ANY DISCREPANCIES EXIST, PRIOR TO PROCEEDING WITH CONSTRUCTION, FOR NECESSARY PLAN OR GRADE CHANGES. NO EXTRA COMPENSATION SHALL BE PAID TO THE CONTRACTOR FOR WORK HAVING TO BE REDONE DUE TO DIMENSIONS OR GRADES SHOWN INCORRECTLY ON THESE PLANS IF SUCH NOTIFICATION HAS NOT BEEN GIVEN.
8. SEE CIVIL PLANS FOR ALL WORK IN STREET RIGHT OF WAY. HIGHWAY (CALTRANS), IF APPLICABLE, AND CITY ENCROACHMENT PERMITS TO BE OBTAINED AND PAID FOR BY THE GENERAL CONTRACTOR.
9. REFER TO DRAWING E2-0 FOR SITE ELECTRICAL REQUIREMENTS AND PHOTOMETRIC PLAN.
10. ALL ON-SITE PAINTED STRIPING, LETTERS AND TRAFFIC ARROWS SHALL BE "EPOXY" TYPE "TRAFFIC" PAINT.
11. PRIOR TO SUBMITTING BID AND INSTALLATION OF WATER SERVICES, G.C. SHALL CONFIRM AVAILABLE RESIDUAL AND STATIC WATER PRESSURES AT STREET POINT OF CONNECTION. G.C. SHALL BE RESPONSIBLE FOR NOTIFYING PROJECT ARCHITECT/ENGINEER OF AVAILABLE PRESSURE.

## GENERAL NOTES C

| KEY NOTE | TYPE | SIZE | NO. | NON STD. |
|---|---|---|---|---|
| 29 | MENU / PREVIEW BOARD & SPEAKER | AREA = 45.5 S.F.<br>HEIGHT = 8'-8" O.A.H. | 1 | |
| 31 | ENTRY PORTAL | AREA = - S.F.<br>HEIGHT = 9'-0" O.A.H. | 1 | |
| * | BUILDING WALL MOUNTED | *REFER TO EXTERIOR ELEVATIONS | | |
| - | DIRECTIONAL SIGN W/ LOGO | AREA = - S.F.<br>HEIGHT = 4' O.A.H. | X | |
| A | DRIVE THRU ⟶ / ⟵ DRIVE THRU | | 0 | |
| B | THANK YOU / EXIT ONLY | | 1 | |
| C | ENTER ⟶ / ⟵ ENTER | | 0 | |
| 27 | FREESTANDING MONUMENT | AREA = - S.F.<br>HEIGHT = - O.A.H. | 0 | EXIST. TO REMAIN |
| - | FREESTANDING POLE | AREA = - S.F.<br>HEIGHT = - O.A.H. | 0 | |

SIGNAGE NOTES:
1. ALL SIGNAGE SHALL BE PERMITTED UNDER A SEPARATE SIGN PERMIT BY VENDOR.
2. G.C. TO PROVIDE ROUGH-IN ELECTRICAL AND FOUNDATIONS FOR ALL SIGNS (U.O.N.).
3. PROVIDE CONCRETE FOUNDATION FOR FREE-STANDING POLE / MONUMENT SIGN. ROUGH ELECTRICAL: FINAL CONNECTION BY G.C.
4. G.C. TO INSTALL MENU BOARD, PREVIEW BOARD, SPEAKER POST AND SOFFIT CLEARANCE SIGN.
5. G.C. SHALL CONFIRM ALL SIGN INSTALLATION DETAILS (INCLUDING BOLT SIZES: PATTERNS, BLOCKING, ELECTRICAL, ETC.) PRIOR TO START OF ANY WORK RELATED TO VENDOR SUPPLIED ITEMS.

## SIGN SCHEDULE D

1. CONSTRUCT (N) A.C. PAVING AND BASE, PER PROJECT GEOTECHNICAL REPORT AND CIVIL DRAWINGS. APPLY LIQUID ASPHALT AT ALL JOINTS BETWEEN CONCRETE AND ASPHALT.
2. CONSTRUCT (N) 6" THICK P.C.C. PAVEMENT (W/ "LAMP BLACK" @ 8 LBS./C.Y.) W/ #4 @ 18" O.C. E.W. (CONST. JTS. @ 12'-0" O.C. APPLY LIQUID ASPHALT AT ALL JOINTS BETWEEN CONCRETE AND ASPHALT). PROVIDE EXPANSION JOINTS @ 20'-0" O.C. MAX (MAX SLOPE 1%).
3. CONSTRUCT (N) 6" P.C.C. CURB PER DETAIL **1**, SHEET **A0-1** (**ONSITE CURBS ONLY**).
4. CONSTRUCT (N) 8" WIDE CONCRETE RETAINING CURB. REFER TO DETAIL **2**, SHEET **A0-1**. FOR PATTERN LAYOUT. REFER TO DETAIL **7**, SHEET **A0-1**.
5. CONSTRUCT (N) P.C.C. CURB EDGE SIDEWALK PER DETAIL **3**, SHEET **A0-1**. 4%-4.5% MAX SLOPE AND 1%-1.5% MAX CROSS SLOPE IN DIRECTION OF TRAVEL.
6. CONSTRUCT (N) P.C.C. CURB EDGE SIDEWALK AT PLANTER PER DETAIL **4**, SHEET **A0-1**. 4%-4.5% MAX SLOPE AND 1%-1.5% MAX CROSS SLOPE IN DIRECTION OF TRAVEL.
7. CONSTRUCT (N) 6" P.C.C. CURB AT DRIVE THRU PER DETAIL **5**, SHEET **A0-1** (AND PRE-PAY WINDOW IF APPLICABLE). CURB ELEVATION NOT TO EXCEED 3" A.F.F.
8. CONCRETE CONTROL JOINTS.
9. PAINT (N) 12" HIGH WHITE LETTERS ON PAVEMENT TO READ "COMPACT".
10. PAINT (N) 4" WIDE WHITE PARKING STALL LINES.
11. PAINT (N) WHITE TRAFFIC ARROWS PER DETAIL **8**, SHEET **A0-1**. USE EPOXY TYPE TRAFFIC PAINT.
12. REMOVABLE BOLLARDS.
13. PAINT (N) 24" HIGH WHITE LETTERS ON PAVEMENT.
14. PAINT (N) ADA CROSSING STRIPES.
15. INSTALL (N) CONCRETE WHEELSTOP PER DETAIL **9**, SHEET **A0-1**.
16. INSTALL (N) 4" STEEL, CONCRETE FILLED BOLLARD PER DETAIL **12**, SHEET **A0-1**.
17. INSTALL (N) BIKE RACKS PER DETAIL **14**, SHEET **A0-1**.
18. RADIUS TOP OF CURB DOWN TO SIDEWALK PER DETAIL **15**, SHEET **A0-1**.
19. CONSTRUCT (N) P.C.C. SIDEWALK PER DETAIL **16**, SHEET **A0-1**. 4%-4.5% MAX SLOPE AND 1%-1.5% MAX CROSS SLOPE IN DIRECTION OF TRAVEL.
20. EXISTING BLOCK WALL TO REMAIN.
21. SEE DETAIL 4, SHEET A0-4 FOR RAMP & STAIR DETAIL.
22. CONSTRUCT PAVEMENT SURFACE AT ALL BUILDING ENTRY/EXIT DOORS NOT TO EXCEED 1.5% SLOPE FOR 60" IN DIRECTION OF DOOR SWING AND 24" TO STRIKE SIDE OF DOOR.
23. ADA ACCESSIBLE PATH OF TRAVEL. CROSS SLOPE ALONG PATH NOT TO EXCEED 1.5% AND SLOPE IN DIRECTION OF TRAVEL NOT TO EXCEED 4.5%. ABRUPT CHANGES IN ELEVATION SHALL BE LIMITED TO 1/2" MAX. G.C. TO RE-GRADE AND/OR PROVIDE CURB RAMPS TO ATTAIN COMPLIANCE IF NECESSARY, VERIFY IN FIELD.
24. CONSTRUCT (N) ADA ACCESSIBLE PARKING STALL PER DETAIL **2**, SHEET **A0-2**. 1.5% MAX PAVEMENT SLOPE WITHIN HANDICAP ACCESSIBLE PARKING AREA; REFER TO GRADING PLAN. REFER TO DISABLED ACCESSIBILITY NOTES, SHEETS T1-1, T1-2, AND T1-3 FOR COMPONENT REQUIREMENTS.
25. INSTALL (N) TOW AWAY SIGN (STREET SIDE) PER ADA REQUIREMENTS; REFER TO DISABLED ACCESSIBILITY SHEETS.
26. CONSTRUCT (N) P.C.C. DEPRESSED CURB RAMP WITH (N) TRUNCATED DOME WARNING STRIP ACROSS FULL WIDTH AND DEPTH OF WALKWAY WHERE PATH OF TRAVEL CROSSES INTO VEHICULAR WAYS PER DETAIL **4**, SHEET **A0-2** (1:12 MAX SLOPE).
27. (E) MONUMENT SIGN TO REMAIN. RE-CIRCUIT SIGN THRU NEW TIME CLOCK/ PANEL.. GC TO REPAINT BASE (TO MATCH DS POST PURPLE).
28. CONSTRUCT (N) TRASH ENCLOSURE. SEE DETAIL 10, SHEET A0.2.
29. NEW MENU BOARD, PREVIEW BOARD, SENSOR LOOP AND SPEAKER PEDESTAL ( **UNDER SEPARATE PERMIT**), PROVIDED BY OWNER, INSTALLED BY G.C. PER DETAILS **2**, **4**, AND **16**, SHEET **A0-3**.
30. CONSTRUCT (N) CURVED WALL PER DETAILS **2**, **3**, AND **4**, SHEET **A0-3**.
31. NEW SOFFIT CLEARANCE SIGN (**UNDER SEPARATE PERMIT**), PROVIDED BY OWNER, INSTALLED BY G.C. PER DETAIL **18**, SHEET **A0-3**.
32. (N) DIRECTIONAL SIGN SUPPLIED AND INSTALLED BY SIGN VENDOR. ROUGH ELECTRICAL AND FINAL CONNECTION VIA TIME CLOCK BY GC.
33. (E) DIRECTIONAL SIGN AND FOUNDATION TO BE REMOVED.
34. NEW PERMEABLE PAVERS SHALL BE CALSTONE PERMEABLE INTERLOCKING CONCRETE PAVEMENT. GC TO INSTALL PER SPECS - SECTION 02795. SEE LANDSCAPE AND CIVIL DRAWINGS AND SPECIFICATIONS BOOK.
35. EXISTING CONCRETE PATHWAY AND PATH OF TRAVEL TO REMAIN.
36. CLEAN AIR VEHICLE PARKING. PAINT 12" HIGH WHITE LETTERS TO READ "CLEAN AIR VEHICLE". 2
37. EXISTING TREES TO REMAIN OR BE REMOVED PER LANDSCAPE DRAWINGS.
38. NEW LANDSCAPE AREA. REFER TO LANDSCAPE DRAWINGS.
39. NOT USED.
40. NOT USED.
41. TEE OFF EXISTING WATER SERVICE BETWEEN (E) METER AND (E) BACKFLOW FOR (N) IRRIGATION WATER SYSTEM. PROVIDE (N) RP BACKFLOW PER SITE UTILITY PLAN, IRRIGATION PLAN AND WATER CO STANDARDS.
42. INSTALL (N) IRRIGATION CONTROLLER ON BACK WALL. REFER TO ELECTRICAL AND LANDSCAPE DRAWINGS.
43. WATER POINT OF ENTRY TO BLDG. PROVIDE GATE VALVE IN CONC. BOX REFER TO PLMB DWGS.
44. REUSE (E) 1.5" WATER METER AND EXTEND 1.5" WATER LINE TO BUILDING PER CIVIL DWG'S. INSTALL (N) BACKFLOW PER SITE UTILITY PLAN AND CITY STANDARDS.
45. NEW ELECTRICAL MAIN SWITCHBOARD. REFER TO ELECTRICAL DRAWINGS. G.C. TO VERIFY SIZE OF NEMA CABINET PRIOR TO POURING CURBS AND ASPHALT AND PROVIDE 48" MIN. CLEAR ACCESSIBLE PATH BETWEEN FACE OF CABINET AND EDGE OF SIDEWALK.
46. ELECTRICAL POINT OF CONNECTION.
47. NOT USED.
48. INSTALL (N) SITE L.P.S. LIGHTING. REFER TO DETAIL **11**, SHEET **A0-1** AND TO PHOTOMETRIC AND ELECTRICAL DRAWINGS.
49. EXISTING TRANSFORMER TO REMAIN.
50. EXISTING AT&T SUB BOX.
51. INSTALL (N) TELEPHONE TERMINATION BOARD PER UTILITY COMPANY REQUIREMENTS. REFER TO ELECTRICAL DRAWINGS.
52. INSTALL (N) 4" CONDUIT W/ PULL STRING FROM TELEPHONE COMPANY SERVICE POINT.
53. GAS POINT OF ENTRY TO BLDG. REFER TO PLUMBING DRAWINGS.
54. EXISTING GAS METER. REFER TO PLUMBING DRAWINGS. PROVIDE GAS SERVICE AS REQUIRED FOR PROJECT PER UTILITY COMPANY REQUIREMENTS. VERIFY LOCATION OF GAS FACILITIES AND ON-SITE LATERALS WITH UTILITY COMPANY PRIOR TO START OF WORK.
55. GAS POINT OF CONNECTION; REFER TO PLUMBING AND CIVIL DRAWINGS.
56. SEWER POINT OF ENTRY TO BLDG. PROVIDE COTG'S. REFER TO PLUMBING DRAWINGS.
57. INSTALL (N) GREASE INTERCEPTOR. REFER TO CIVIL DRAWINGS.
58. SEWER POINT OF CONNECTION WITH (N) CLEANOUT. REFER TO CIVIL DWG'S.
59. EXISTING SANITARY SEWER LINE.
60. REMOVE EXISTING GREASE INTERCEPTOR.

## KEY NOTES B

VMI architecture
Design · Planning · Interiors
637 5th Avenue San Rafael, CA 94901
415-451-2500 415-451-2595 fax
www.vmarch.com

VMI JOB NUMBER
Y1022

LICENSED ARCHITECT
HUGH EDWARD MURPHY
No. C17928
REN. 10/31/11
STATE OF CALIFORNIA

RECORD DATES

| | |
|---|---|
| DD SUBMITTAL | 10-21-10 |
| BLDG. SUBMITTAL | 6-10-11 |
| BID SET | - |
| CONTRACT SET | - |

REVISIONS

2 08/24/11 PC Comments/ Plan Updates

CLIENT
TACO BELL CORP
1 GLEN BELL WAY, MD# 534
IRVINE, CA 92618

SITE #286119

PROJECT
TACO BELL
840 S. Bascom Avenue
San Jose, CA 95128-2605
APN #282-42-038

TY07_AUG09P

SITE PLAN

# A0.0

PERMIT FILE # CP10-060

APPROVED
City of San Jose, Building Division
❑ Building ❑ Plumbing/Mechanical
❑ Electrical ❑ Zoning
G··RY VAN WEGEN (408) 277-8135
Plan No. __________ Date: ______

#11080000 PLM OFFICE

Printed on Recycled Paper at American Draft Source

W:\Data\Yum_TBY\1022_San Jose_S Bascom_S286119\03_cd_current\044_1022_A0-1.dwg By: EALEXANDER Saved on: 8/2/2011 3:59:06 PM
ALL IDEAS, DESIGNS, ARRANGEMENTS OR PLANS INDICATED BY THIS DRAWING ARE OWNED BY, AND THE PROPERTY OF THIS OFFICE, AND WERE CREATED, EVOVED AND DEVELOPED FOR USE ON, AND IN CONNECTION WITH, THE SPECIFIED PROJECT. NONE OF SUCH IDEAS, DESIGNS, ARRANGEMENTS OR PLANS SHALL BE USED BY OR DISCLOSED TO ANY PERSON, FIRM OR CORPORATION FOR ANY PURPOSE WHATSOEVER WITHOUT THE WRITTEN PERMISSION OF PROJECT ARCHITECT.
WRITTEN DIMENSIONS ON THESE DRAWINGS SHALL HAVE PRECEDENCE OVER SCALE DIMENSIONS. CONTRACTORS SHALL VERIFY AND BE RESPONSIBLE FOR ALL DIMENSIONS AND CONDITIONS ON THE JOB AND THIS OFFICE MUST BE NOTIFIED OF ANY VARIATION FROM THE DIMENSIONS AND CONDITIONS SHOWN BY THESE DRAWINGS. SHOP DETAILS OF ADEQUATE SCALE MUST BE SUBMITTED TO THIS OFFICE FOR APPROVAL BEFORE PROCEEDING WITH FABRICATION ON ITEMS SO NOTED.

NOT USED 17

NOT USED 18

NOT USED 19

NOT USED 20

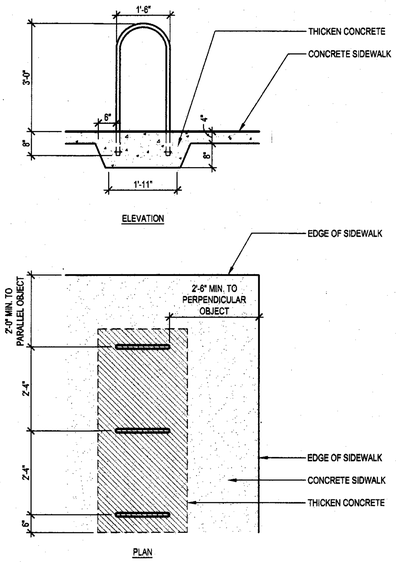


NOTES:
COLOR GALVANIZED STEEL MANUFACTURER COLOR.

FUNCTION FIRST BIKE SECURITY
CORVALLIS, OR 97339

PHONE: (888) 245-3742
FAX: (520) 326-4801

MODEL #: BR8
CAPACITY: 8 BIKES
LENGTH: 72"

A0-1.14

BIKE RACKS 1/2" = 1'-0" 14

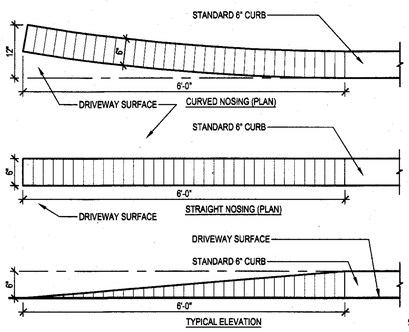


A0-1.15

STANDARD CURB NOSING 3/4" = 1'-0" 15

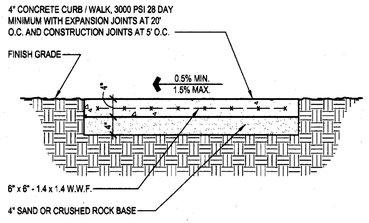


A0-1.16

SIDEWALK 3/4" = 1'-0" 16

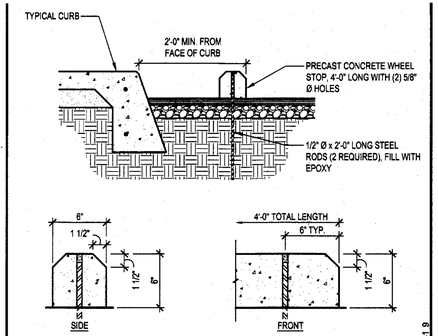


A0-1.9

WHEEL STOP 3/4" = 1'-0" 9

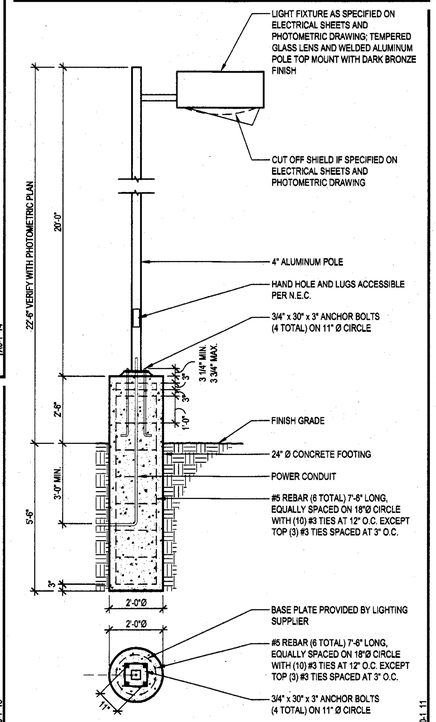


A0-1.11

POLE LIGHT 3/8" = 1'-0" 11

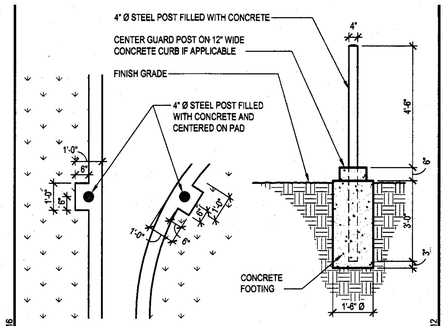


A0-1.12

BOLLARD 3/8" = 1'-0" 12

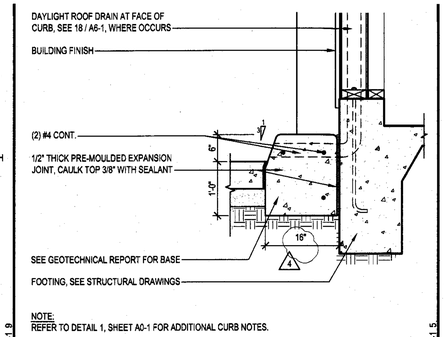


NOTE:
REFER TO DETAIL 1, SHEET A0-1 FOR ADDITIONAL CURB NOTES.

A0-1.5

CURB AT DRIVE THRU 3/4" = 1'-0" 5

NOT USED 6

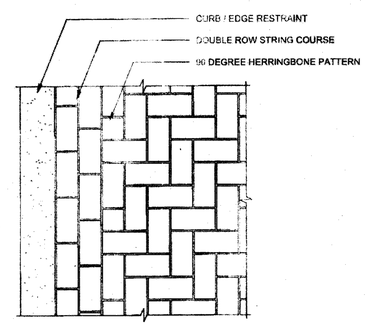


PERMEABLE PAVER PATTERN N.T.S. 7

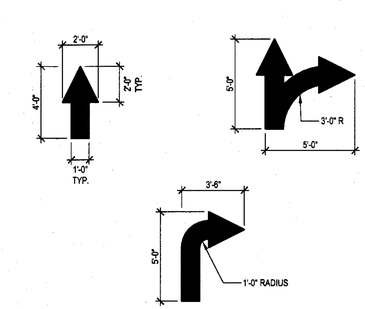


NOTE:
USE WHITE EPOXY TYPE TRAFFIC PAINT.

A0-1.8

TRAFFIC ARROWS 1/4" = 1'-0" 8

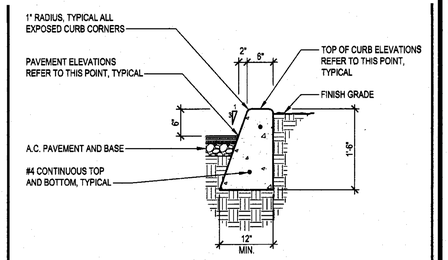


NOTES:
1. REFER TO PROJECT GEOTECHNICAL REPORT FOR A.C. PAVEMENT, BASE AND SUBGRADE REQUIREMENTS.
2. ALL CURBING/SIDWALKS TO BE 3000 P.S.I. AT 28 DAY P.C.C., TYP.
3. PROVIDE EXPANSION JOINTS AT 20'-0" O.C.

A0-1.1

CURB 3/4" = 1'-0" 1

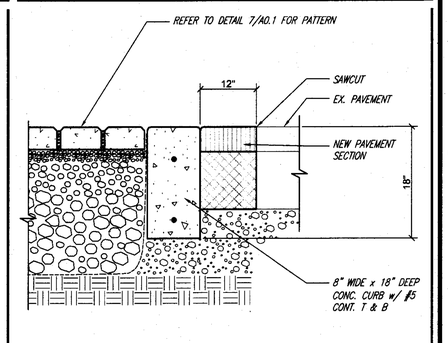


CONCRETE RETAINING CURB FOR PERMEABLE PAVERS N.T.S. 2

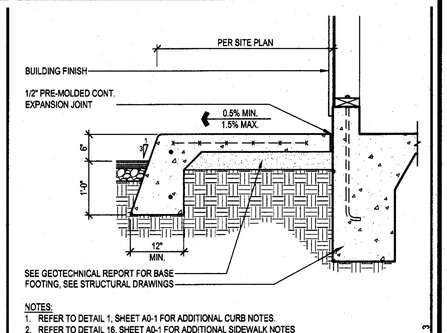


NOTES:
1. REFER TO DETAIL 1, SHEET A0-1 FOR ADDITIONAL CURB NOTES.
2. REFER TO DETAIL 16, SHEET A0-1 FOR ADDITIONAL SIDEWALK NOTES

A0-1.3

CURB EDGE SIDEWALK 3/4" = 1'-0" 3

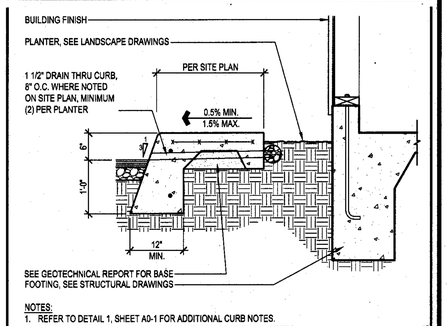


NOTES:
1. REFER TO DETAIL 1, SHEET A0-1 FOR ADDITIONAL CURB NOTES.
2. REFER TO DETAIL 16, SHEET A0-1 FOR ADDITIONAL SIDEWALK NOTES

A0-1.4

CURB EDGE SIDEWALK AT PLANTER 3/4" = 1'-0" 4

VMI architecture
Design · Planning · Interiors
637 5th Avenue San Rafael, CA 94901
415-451-2500 415-451-2595 fax
www.vmarch.com

VMI JOB NUMBER
Y1022

LICENSED ARCHITECT
ERICH EDWARD WUNDERLICH
No. C17936
EXP. 10-31-11
STATE OF CALIFORNIA

RECORD DATES

| | |
|---|---|
| DD SUBMITTAL | 10-21-10 |
| BLDG. SUBMITTAL | 6-10-11 |
| BID SET | - |
| CONTRACT SET | - |

REVISIONS

CLIENT
TACO BELL CORP
1 GLEN BELL WAY, MD# 534
IRVINE, CA 92618

SITE #286119

PROJECT
TACO BELL
840 S. Bascom Avenue
San Jose, CA 95128-2605
APN #282-42-038

TY07_AUG09P

SITE DETAILS
A0.1

PERMIT FILE # CP10-060

Printed on Recycled Paper at American Draft Source

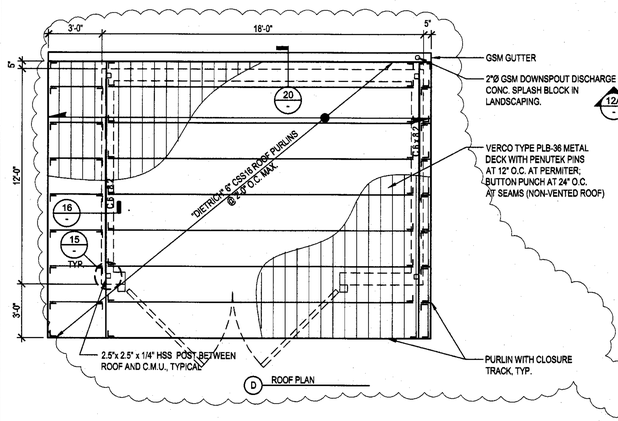


D ROOF PLAN

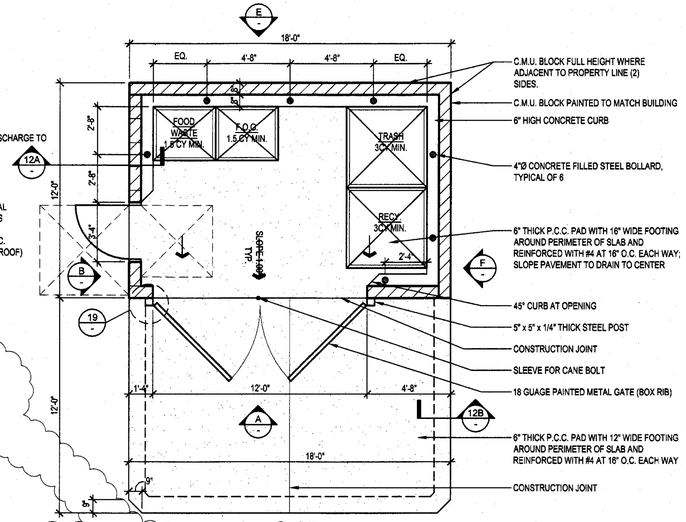


C PLAN

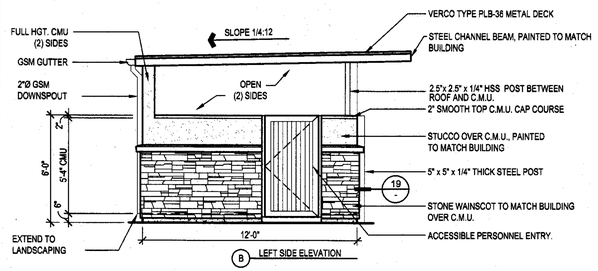


B LEFT SIDE ELEVATION

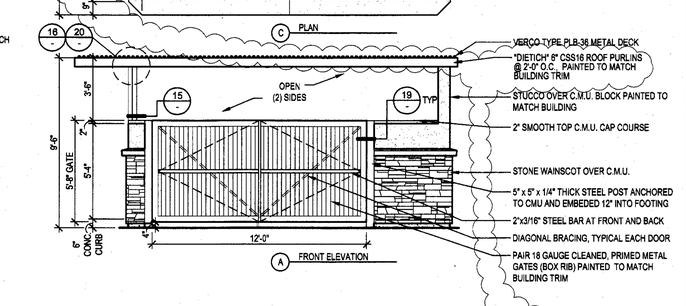


A FRONT ELEVATION

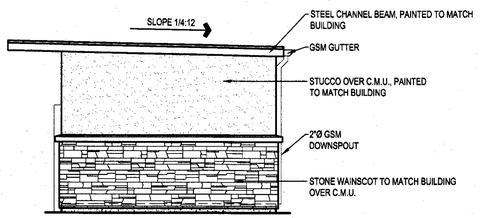


F RIGHT SIDE ELEVATION

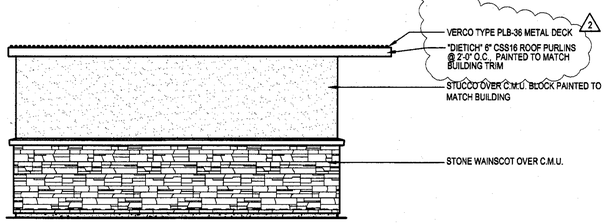


E REAR ELEVATION

TRASH ENCLOSURE 1/4" = 1'-0" | 10

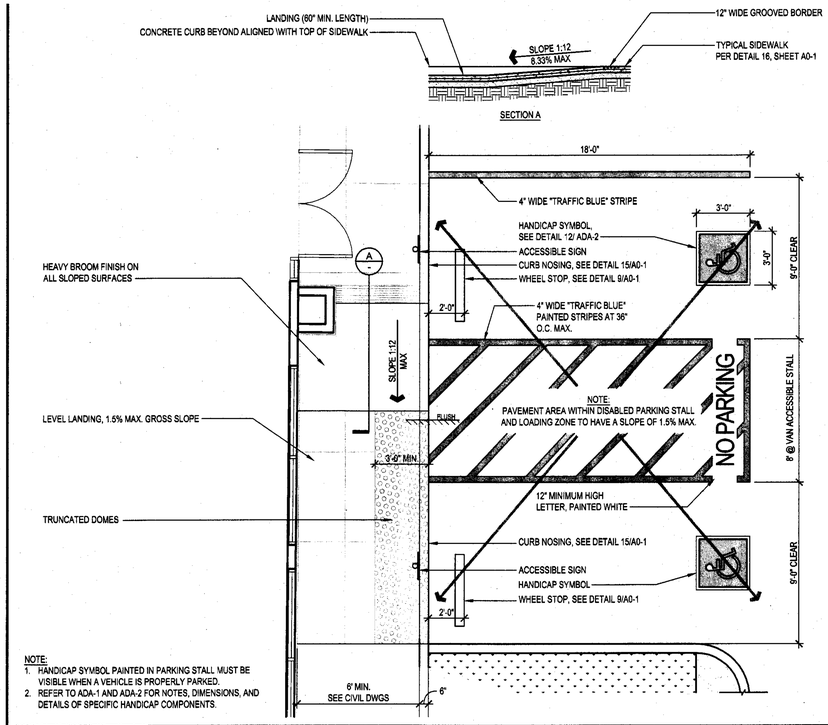


NOTE:
1. HANDICAP SYMBOL PAINTED IN PARKING STALL MUST BE VISIBLE WHEN A VEHICLE IS PROPERLY PARKED.
2. REFER TO ADA-1 AND ADA-2 FOR NOTES, DIMENSIONS, AND DETAILS OF SPECIFIC HANDICAP COMPONENTS.

A0-2 2

PARKING STALL WITH DEPRESSED CURB RAMP 1/4" = 1'-0" | 2

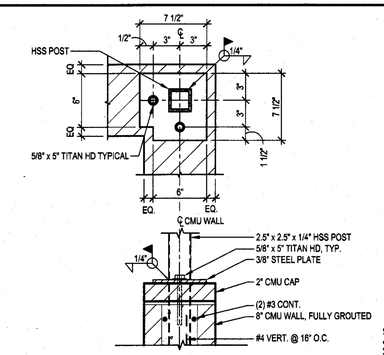


A0-2 15

POST BASE CONNECTION 1 1/2" = 1'-0" | 15

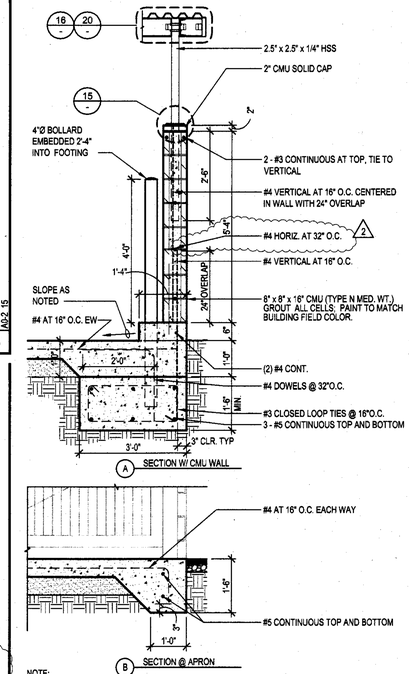


NOTE:
REFER TO GEOTECHNICAL REPORT FOR FOOTING DEPTH, PAD / BASE SECTION.

A0-2 12

TRASH ENCLOSURE SECTIONS 1/2" = 1'-0" | 12

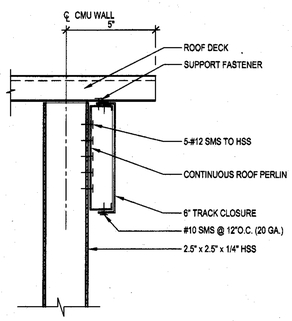


A0-2 20

TRASH ENCLOSURE ROOF SECTION 3" = 1'-0" | 20

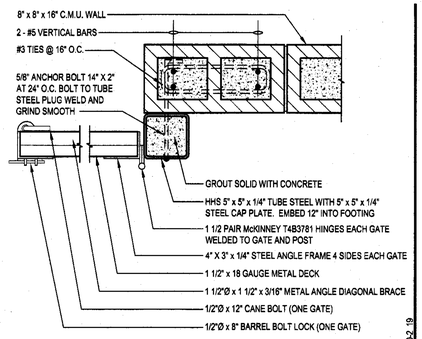


A0-2 19

TRASH ENCLOSURE GATE JAMB 1 1/2" = 1'-0" | 19

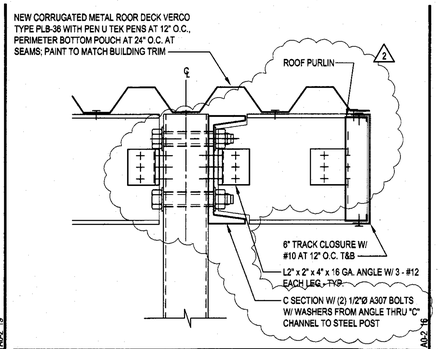


A0-2 16

TRASH ENCLOSURE ROOF SECTION 3" = 1'-0" | 16

W:\Data\Yuml_TBY1022_San Jose_S Bascom_S286119\03_cd_current\046_1022_A0-2.dwg By: EALEXANDER Saved on: 8/2/2011 4:43:27 PM

ALL IDEAS, DESIGNS, ARRANGEMENTS AND PLANS INDICATED BY THIS DRAWING ARE OWNED BY, AND THE PROPERTY OF, THIS OFFICE AND WERE CREATED, EVOLVED AND DEVELOPED FOR USE ON, AND IN CONNECTION WITH, THE SPECIFIED PROJECT. NONE OF SUCH IDEAS, DESIGNS, ARRANGEMENTS OR PLANS SHALL BE USED BY OR DISCLOSED TO ANY PERSON, FIRM OR CORPORATION FOR ANY PURPOSE WHATSOEVER WITHOUT THE WRITTEN PERMISSION OF PROJECT ARCHITECT.
WRITTEN DIMENSIONS ON THESE DRAWINGS SHALL HAVE PRECEDENCE OVER SCALE DIMENSIONS. CONTRACTORS SHALL VERIFY AND BE RESPONSIBLE FOR ALL DIMENSIONS AND CONDITIONS ON THE JOB AND THIS OFFICE MUST BE NOTIFIED OF ANY VARIATION FROM THE DIMENSIONS AND CONDITIONS SHOWN BY THESE DRAWINGS. SHOP DETAILS OF ADEQUATE SCALE MUST BE SUBMITTED TO THIS OFFICE FOR APPROVAL BEFORE PROCEEDING WITH FABRICATION ON ITEMS SO NOTED.

VMI architecture
Design · Planning · Interiors
837 5th Avenue San Rafael, CA 94901
415-451-2500 415-451-2595 fax
www.vmarch.com

VMI JOB NUMBER
Y1022

LICENSED ARCHITECT
JOSEPH EDWARD MORRIS
No. C17926
Exp. 10/31/11
STATE OF CALIFORNIA

RECORD DATES

| | |
|---|---|
| DD SUBMITTAL | 10-21-10 |
| BLDG. SUBMITTAL | 6-10-11 |
| BID SET | - |
| CONTRACT SET | - |

REVISIONS

CLIENT
TACO BELL CORP
1 GLEN BELL WAY, MD# 534
IRVINE, CA 92618
SITE #286119

PROJECT
TACO BELL
840 S. Bascom Avenue
San Jose, CA 95128-2605
APN #282-42-038

TY07_AUG09P

SITE DETAILS
A0.2

PERMIT FILE # CP10-060

Printed on Recycled Paper at American Draft Source

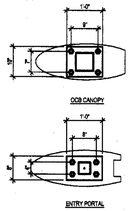


G.C. TO VERIFY ALL BOLT PATTERNS AND SIZES WITH SIGN SUPPLIER PRIOR TO SETTING UP FORMS.

G.C. TO COORDINATE FOOTING DETAILS & REINFORCING WITH SIGN VENDOR.

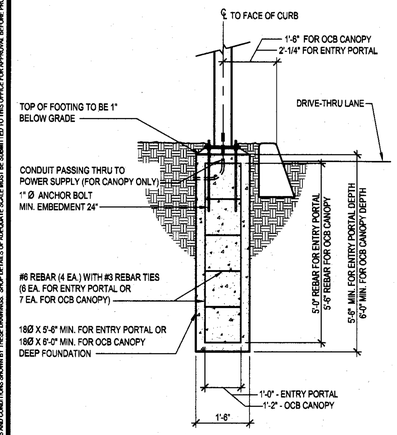


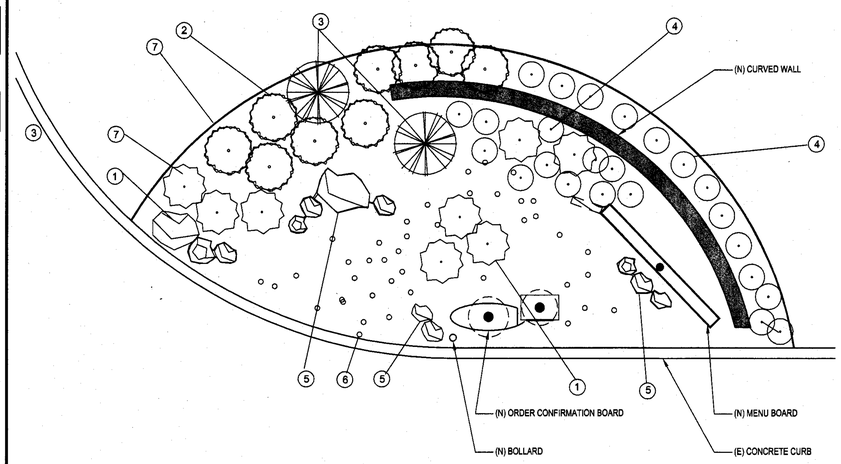


| PLANTING SCHEDULE | | QTY | SIZE | HGT. | SP. |
|---|---|---|---|---|---|
| 1 | BLUE FESCUE FESTUCA GLAUCA | PER PLAN | 3 GAL. | 12" | 12" |
| 2 | RED YUCCA HESPERALOE PARVIFLORA | PER PLAN | 3 GAL. | 15" | 15" |
| 3 | OUR LORD'S CANDLE YUCCA WHIPPLEI | PER PLAN | 5 GAL. | | |
| 4 | CREEPING JUNIPER JUNIPERUS HORIZONTALIS | PER PLAN | 3 GAL. | 18" | 12" |
| 5 | SAND STONE BOULDER DESERT SAND COLOR - 8" TO 24" | PER PLAN | 6"-24" | N/A | |
| 6 | GRAVEL MULCH CALIFORNIA GOLD - 3" AGGREGATE | PER PLAN | 3" | N/A | |
| 7 | STEEL EDGING | PER PLAN | N/A | 3" AFG 6" AFG | |

MATERIALS LEGEND

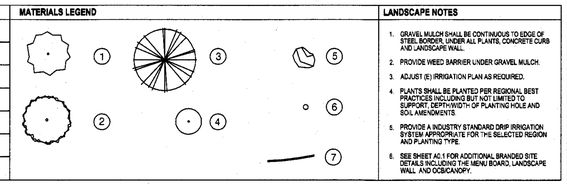

LANDSCAPE NOTES

1. GRAVEL MULCH SHALL BE CONTINUOUS TO EDGE OF STEEL BORDER, UNDER ALL PLANTS, CONCRETE CURB AND LANDSCAPE WALL.
2. PROVIDE WEED BARRIER UNDER GRAVEL MULCH.
3. ADJUST (E) IRRIGATION PLAN AS REQUIRED.
4. PLANTS SHALL BE PLANTED PER REGIONAL BEST PRACTICES INCLUDING BUT NOT LIMITED TO SUPPORT, DEPTH/WIDTH OF PLANTING HOLE AND SOIL AMENDMENTS.
5. PROVIDE A INDUSTRY STANDARD DRIP IRRIGATION SYSTEM APPROPRIATE FOR THE SELECTED REGION AND PLANTING TYPE.
6. SEE SHEET A0.1 FOR ADDITIONAL BRANDED SITE DETAILS INCLUDING THE MENU BOARD, LANDSCAPE WALL AND OCB/CANOPY.

DRIVE-THRU LANDSCAPING PLAN NTS | 10

NOTES:
1. IF EXISTING OCB LOCATION IS TO BE REUSED. CENTERLINE OF FOOTING CAN BE BETWEEN 1'-10" AND 2'-10" FROM THE FACE OF CURB.
2. CENTER LINE OF CANOPY FOOTING MUST BE WITHIN 18" OF FACE OF CURB.
3. ALL AREAS OF THE MB MUST BE VISIBLE TO THE DRIVER LOCATED AT OCB. CENTERED ON OCB.
4. CENTER OF MB TO BE 9'-0" TO 12'-0" FROM DRIVERS POINT OF VIEW.

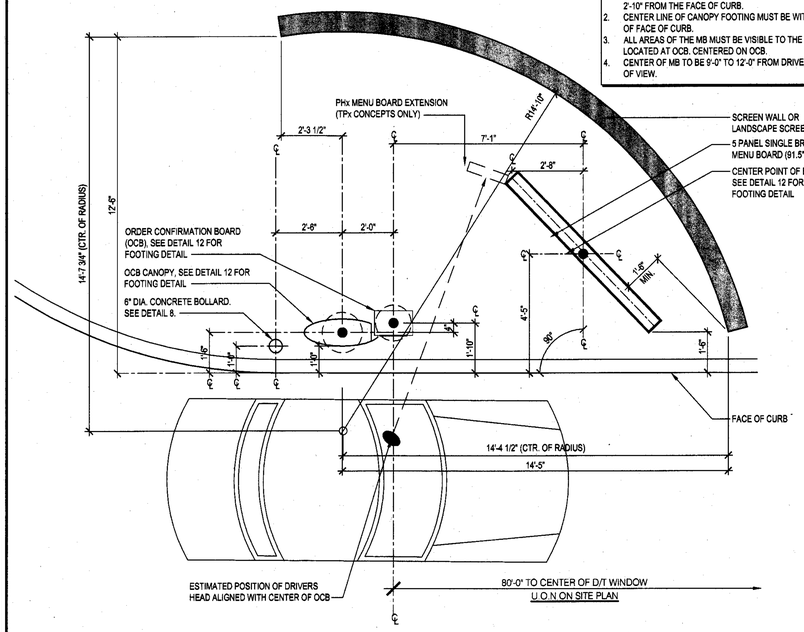


3/8" = 1'-0"

NOT USED | 19

NOT USED | 15

BOLT PATTERN PROVIDED IS AN EXAMPLE. OBTAIN ANCHOR BOLT TEMPLATE FROM SUPPLIER.

CONDUIT SCHEDULE

| DEVICE | POWER | DATA |
|---|---|---|
| DIRECTIONAL | (1) 3/4" | - |
| OCB | (1) 3/4" | (3) 1" |
| MENU BOARD | (1) 3/4" | (1) 1" |

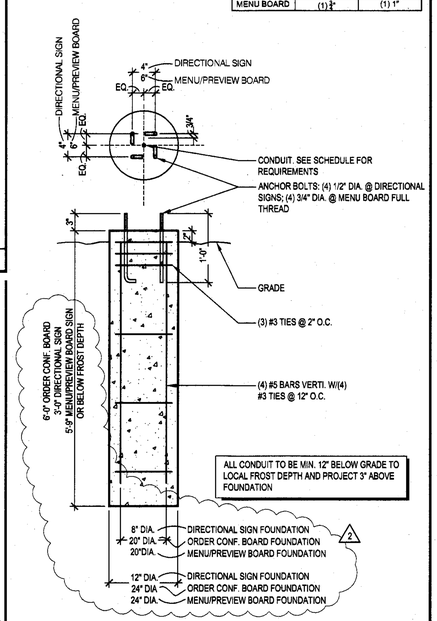


ALL CONDUIT TO BE MIN. 12" BELOW GRADE TO LOCAL FROST DEPTH AND PROJECT 3" ABOVE FOUNDATION

DS, OCB & MENU BOARD FOOTING 1"=1'-0" | 12

NOTE:
SEE DETAIL 4, SHEET A0-3.

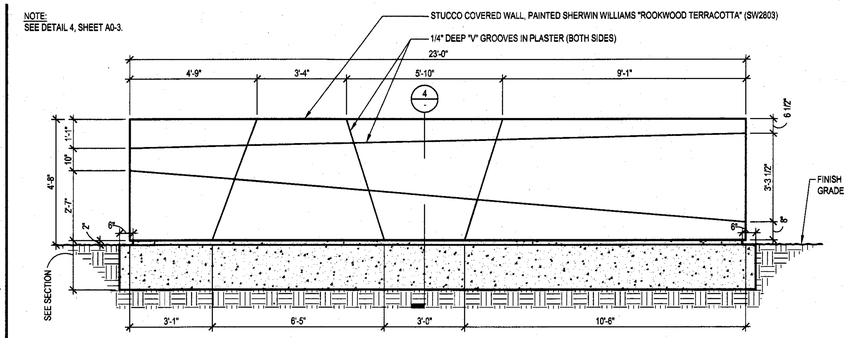


CURVED WALL DETAIL 3/8" = 1'-0" | 3

NOT USED | 20

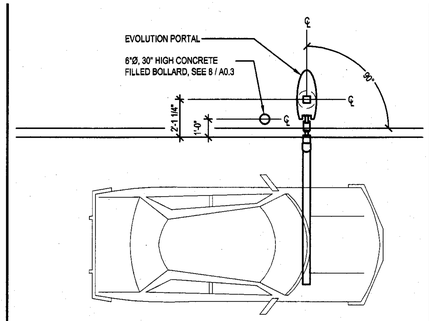


2 ENLARGED CLEARANCE BAR (PORTAL) PLAN 1/4" = 1'-0" | 16

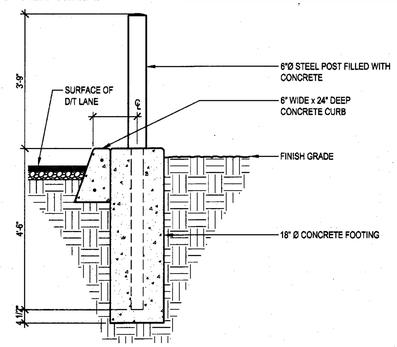


A0.3.2

OCB BOLLARDS 1/2" = 1'-0" | 8

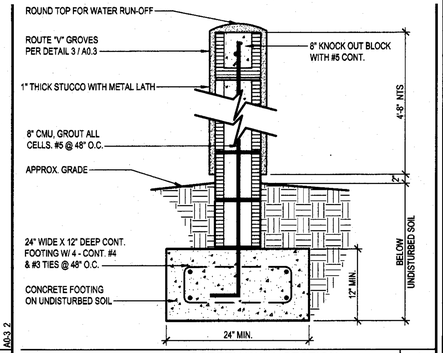


SCREEN WALL SECTION 1" =-1'-0" | 4


VMI architecture
Design · Planning · Interiors
637 5th Avenue San Rafael, CA 94901
415-451-2500 415-451-2595 fax
www.vmarch.com


VMI JOB NUMBER
Y1022

LICENSED ARCHITECT HUGH EDWARD MURPHY No. C17926 REN. 10/31/11 STATE OF CALIFORNIA

RECORD DATES

| | |
|---|---|
| DD SUBMITTAL | 10-21-10 |
| BLDG. SUBMITTAL | 8-10-11 |
| BID SET | - |
| CONTRACT SET | - |

REVISIONS

2 08/24/11 PC Comments/ Plan Updates

CLIENT
TACO BELL CORP
1 GLEN BELL WAY, MD# 534
IRVINE, CA 92618
SITE #286119

PROJECT
TACO BELL
840 S. Bascom Avenue
San Jose, CA 95128-2605
APN #282-42-038

TY07_AUG09P

SITE DETAILS
A0.3

PERMIT FILE # CP10-060


W:\DataIYum_TBIY1022_San Jose_S Bascom_S286119\03_cd_current\048_1022_A0-3.dwg By: EALEXANDER Saved on: 8/2/2011 4:43:49 PM
ALL IDEAS, DESIGNS, ARRANGEMENTS AND PLANS INDICATED BY THIS DRAWING ARE OWNED BY, AND THE PROPERTY OF THIS OFFICE, AND WERE CREATED, EVOLVED AND DEVELOPED FOR USE ON, AND IN CONNECTION WITH, THE SPECIFIED PROJECT. NONE OF SUCH IDEAS, DESIGNS, ARRANGEMENTS AND PLANS MAY BE USED BY OR DISCLOSED TO ANY PERSON, FIRM OR CORPORATION FOR ANY PURPOSE WHATSOEVER WITHOUT THE WRITTEN PERMISSION OF PROJECT ARCHITECT.
WRITTEN DIMENSIONS ON THESE DRAWINGS SHALL HAVE PRECEDENCE OVER SCALE DIMENSIONS. CONTRACTORS SHALL VERIFY AND BE RESPONSIBLE FOR ALL DIMENSIONS AND CONDITIONS ON THE JOB AND THIS OFFICE MUST BE NOTIFIED OF ANY VARIATION FROM THE DIMENSIONS AND CONDITIONS SHOWN BY THESE DRAWINGS. SHOP DETAILS OF ADEQUATE SCALE MUST BE SUBMITTED TO THIS OFFICE FOR APPROVAL BEFORE PROCEEDING WITH FABRICATION ON ITEMS SO NOTED.


Printed on Recycled Paper at American Draft Source

## FOOD AREA SANITATION NOTES

GC SHALL BE RESPONSIBLE FOR COMPLYING WITH LOCAL HEALTH DEPARTMENT REQUIREMENTS FOR THE CONSTRUCTION OF A FULL SERVICE RESTAURANT. VERIFY INSPECTION REQUIREMENTS WITH LOCAL HEALTH DEPARTMENT PRIOR TO CONSTRUCTION. THE FOLLOWING ITEMS ARE REITERATED TO FURTHER CLARIFY PERMIT REQUIREMENTS.

1. ALL EXTERIOR DOORS AND WINDOWS SHALL BE TIGHT FITTING. DOORS SHALL BE EQUIPPED WITH CLOSERS AND OPERABLE WINDOWS SHALL HAVE FIXED GALVANIZED #16 MESH SCREENS.
2. TOILET ROOMS IN KITCHEN AREAS SHALL BE EQUIPPED WITH TIGHT FITTING DOORS WITH CLOSERS. DO NOT UNDERCUT DOORS. PROVIDE DOOR SHOES FOR TO SEAL OPENING AT FLOOR LEVEL.
3. WALL AND CEILING SURFACES WHERE FOOD IS PREPARED, STORED OR DISHES ARE CLEANED SHALL BE DURABLE, SMOOTH, NONABSORBENT AND EASILY CLEANABLE. PROVIDE STAINLESS STEEL (26 GA.) WALL PANELS OVER TILE BACKER BOARD ON WALL SURFACES BEHIND AND IMMEDIATELY ADJACENT TO COOKLINES.
4. ALL AREAS SHALL BE VENTILATED PER U.M.C. ALL EXHAUST HOOD SYSTEMS SHALL BE DESIGNED AND INSTALLED PER U.M.C. AND THEIR MFR. LISTED REQUIREMENTS. REFER TO THE MECHANICAL DRAWINGS. INSTALLER SHALL BE RESPONSIBLE FOR THE BALANCING AND TESTING OF H.V.A.C. AND HOOD EXHAUST SYSTEMS TO THE SATISFACTION OF THE HEALTH AND BUILDING DEPARTMENTS.
5. ALL FOOD PREPARATION AREAS SHALL BE ADEQUATELY ILLUMINATED AS FOLLOWS (REF. LIGHTING PLAN FOR LIGHTING DESIGN).
   - A. 20 F.C. (OF ILLUMINATION) @ 30" A.F.F. WHERE FOOD IS PREPARED OR PACKAGED AND WHERE DISHES ARE CLEANED
   - B. 10 F.C. AT BAR AREAS WHERE ALCOHOL IS PREPARED.
   - C. 20 F.C. FOR GENERAL CLEANING OPERATIONS.
   - D. LIGHT FIXTURES IN AREAS WHERE FOOD IS PREPARED OR OPEN FOOD IS STORED OR WHERE UTENSILS ARE CLEANED SHALL BE OF 'SHATTERPROOF' CONSTRUCTION OR HAVE 'SHATTERPROOF' LENSES. FIXTURES SHALL BE READILY CLEANABLE.
6. ALL CRACKS AND CREVICES AT CONSTRUCTION MATERIAL JOINTS IN SHALL BE SEALED / CAULKED WITH 'WHITE' SILICONE.
7. ALL PIPES, CONDUITS, ETC. SHALL BE FULLY CONCEALED IN WALLS, SLABS OR CEILINGS OR WITHIN CABINET CONSTRUCTION. ALL PENETRATIONS SHALL BE FULLY CAULKED WITH 'WHITE' SILICONE.
8. ALL FLOOR SUPPORTED KITCHEN EQUIPMENT NOT ON WHEELS SHALL BE PLACED ON EITHER 6" HIGH ROUND METAL LEGS OR 6" HIGH SEALED PEDESTAL WITH COVED FLOOR TILE BASE. EQUIPMENT NOT ON WHEELS SHALL HAVE 6" CLEARANCE TO WALLS OR OTHER EQUIPMENT OR BE SEALED DIRECTLY TO ADJOINING WALL SURFACE.
9. PROVIDE INDIRECT WASTE (I.E. FLOORSINKS) FOR ICE MACHINES/ BIND, FOOD PREPARATION, DISPLAY CASES, REFRIGERATION UNITS, STEAM TABLES AND OTHER SIMILAR EQUIPMENT. REFER TO PLUMBING AND KITCHEN EQUIPMENT DRAWINGS.
10. ALL FOOD SERVICE EQUIPMENT SHALL BE NON-CORROSIVE, NON-TOXIC AND HAVE N.S.F. (AND UL WHERE REQ'D) LABELS PERMANENTLY AFFIXED TO THE EQUIPMENT.
11. PROVIDE SEPARATE HANDSINKS WITH SOAP & TOWEL DISPENSERS AND HOT/COLD WATER IN FOOD PREPARATION AREAS. REFER TO PLUMBING AND KITCHEN EQUIPMENT DWG'S.
12. PROVIDE A SEPARATE ENCLOSURE FOR THE STORAGE OF CLEANING CHEMICALS, INSECTICIDES, POISONS AND OTHER TOXIC MATERIALS IF STORED IN A FOOD PREPARATION AREA. REFER TO PLANS.
13. PROVIDE SEPARATE STORAGE CONTAINERS FOR SOILED LINENS, TOWELS AND APPAREL.
14. PROVIDE ADEQUATE GARBAGE CONTAINERS INSIDE AND OUTSIDE. CONTAINERS SHALL BE LEAK AND RODENT PROOF. REFER TO ARCH. AND KITCHEN EQUIPMENT PLANS FOR LOCATIONS.

MINIMUM NUMBER OF REQUIRED PLUMBING FIXTURES. THE DIRECTIVE REFERS TO THE USE CBC TABLE 2902.1 (WHICH SHOULD BE 2901), WHICH IS NOT ADAPTED IN CALIFORNIA AND REFERS TO THE USE OF THE CPC TABLE 4-1. WE HAVE 89 OCCUPANTS TOTAL OR 45 MEN AND 45 WOMEN. TABLE 4-1 REQUIRES ONE WATER CLOSET FOR 1 - 50 MEN AND ONE FOR 1- 50 WOMEN. ONE URINAL IS REQUIRED FOR 1 - 150 MEN. FOOTNOTE 14 REQUIRES TOTAL NUMBER OF WATER CLOSETS FOR FEMALES SHALL BE EQUAL TO THE TOTAL NUMBER OF WATER CLOSETS AND URINALS REQUIRED FOR MEN. THERE SHALL BE ONE LAVATORY FOR 1 - 150 MEN AND ONE FOR 1 - 150 WOMEN. THEREFORE, MEN REQUIRE ONE WATER CLOSET, ONE URINAL AND ONE LAVATORY. WOMEN REQUIRE TWO WATER CLOSETS AND ONE LAVATORY. PLAN COMPLIES. THE CBC IS LESS RESTRICTIVE.

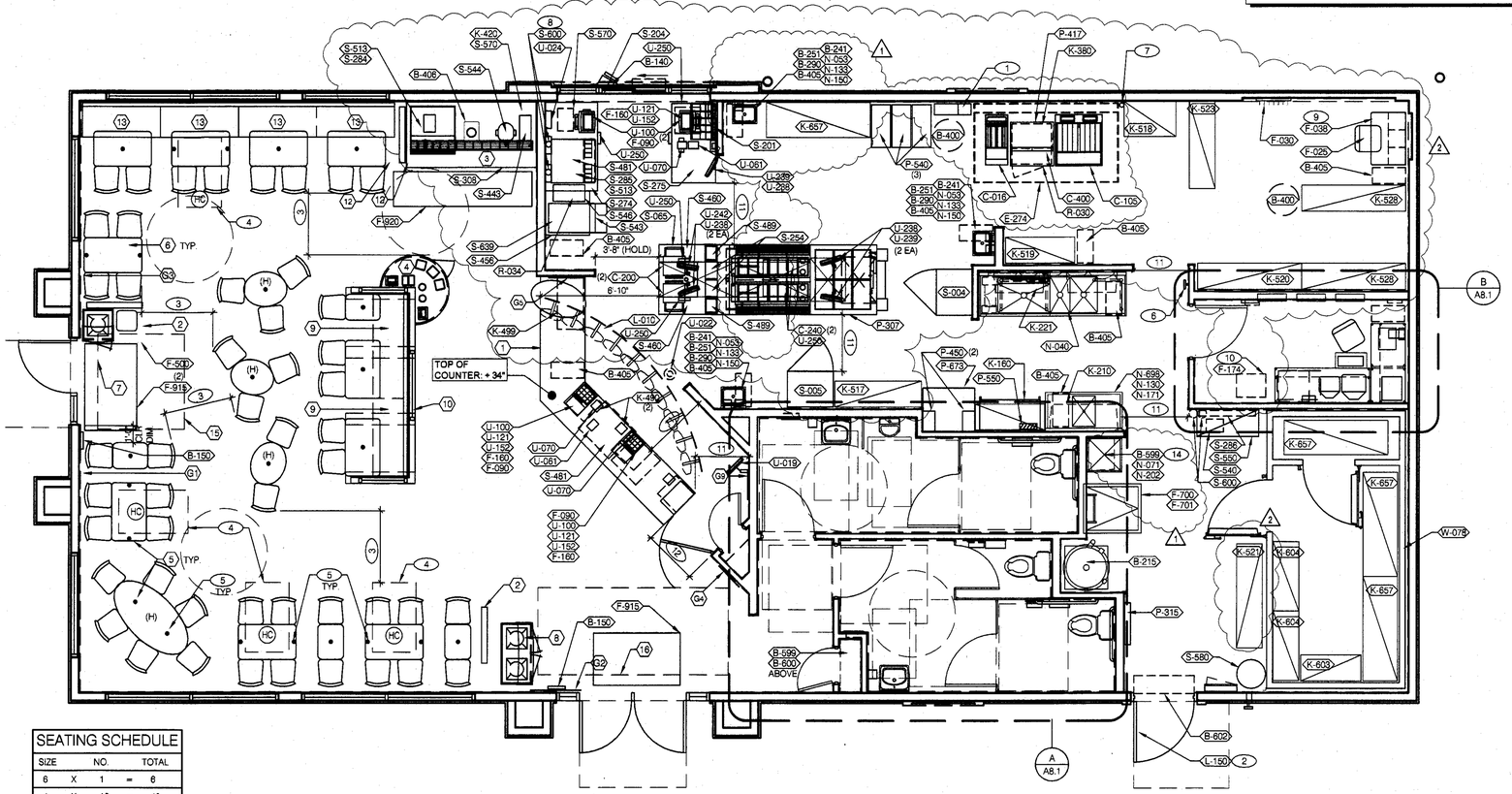


| SEATING SCHEDULE | | | | |
|---|---|---|---|---|
| SIZE | | NO. | | TOTAL |
| 6 | X | 1 | = | 6 |
| 4 | X | 10 | = | 40 |
| 3 | X | 2 | = | 6 |
| 2 | X | 5 | = | 10 |
| GRAND TOTAL | | | = | 62 |
| 62 | X | 5 % | = | 3.1 |
| ACCESIBLE SEATS | | | = | 4 |

REF. NORTH

**EQUIPMENT/SEATING PLAN** 1/4"=1'-0" **A**

| X | QTY. | ITEM | REMARKS |
|---|---|---|---|
| 1 | 1 | SERVING COUNTER | INCLUDES SELF SUPPORTING FRAME |
| 2 | 2 | DINING SCREEN | |
| 3 | 0 | SELF-SERVE DRINK COUNTER | INCLUDED IN DISTRIBUTOR PACKAGE |
| 4 | 1 | CONDIMENT COUNTER | -- |
| 5 | 1 SET | TABLE PACKAGE | INCLUDES TABLES, FRAMES, BOOTHS (MIN.5% (4 SEATS) SHALL BE ACCESSIBLE. |
| 6 | 1 SET | CHAIR PACKAGE | -- |
| 7 | 1 | TRASH RECEPTACLE/TRAY RETURN-SINGLE | -- |
| 8 | 1 | TRASH RECEPTACLE/TRAY RETURN-DOUBLE | -- |
| 9 | 1 | SETTEE | -- |
| 10 | 1 | DIVIDER WALL | |
| 11 | 1 SET | ARTWORK PACKAGE | REFER TO PLAN AND SCHEDULE (THIS SHEET) AND INTERIOR ELEVATIONS SHEETS A8.0 & A8.1 FOR LOCATIONS |
| 12 | 1 | BENCH MOUNTED DINING SCREEN | |
| 13 | 4 | BENCH SETTEE | FREE STANDING (NO CORE DRILL) |
| 14 | 4 | INTERIOR TRELLIS | 48" LONG TRELLIS - SUSPENDED FROM CEILING |
| 15 | 1 | FRONT SOFFIT - SUSPENDED FROM CEILING | SUSPENDED FROM CEILING |
| 16 | 1 | SIDE ENTRY SOFFIT - SUSPENDED FROM CEILING | SUSPENDED FROM CEILING |

**SEATING PACKAGE - BY SEATING VENDOR U.O.N. (TOTAL SEATS = 63)** **E**

| X | QTY. | ITEM | REMARKS |
|---|---|---|---|
| G1 | 1 | "OPEN LATE" (40-1/2" W x 60" H) | SEE A8.0 FOR LOCATION |
| G2 | 1 | "DRIVE-THRU MAN" (40 1/2" W X 60" H) | SEE A8.0 FOR LOCATION |
| G3 | 1 | "EMPTY STOMACH" (40 1/2" W X 60" H) | SEE A8.0 FOR LOCATION |
| G4 | 1 | TB QUALITY STATEMENT (26" W x 52" H) | SEE A8.0 FOR LOCATION |
| G5 | 1 | NUTRITION POSTER * | SEE A8.0 FOR LOCATION |
| G9 | 1 | "KID'S MEAL DISPLAY" (21" W X 30" H) | SEE A8.0 FOR LOCATION |

* THE NUTRITION MATERIALS (ACRYLIC HOLDER, NUTRITION POSTER AND BRAND NUTRITION BROCHURES) ARE PART OF A NEW RESTAURANT'S GRAND OPENING KIT AND ARE PROVIDED BY YUM FORMS.

**ARTWORK SCHEDULE** **D**

DECOR
1. REFER TO SCOPE OF WORK SHEETS (OF THE PROJECT SPECIFICATIONS MANUAL) FOR RESPONSIBILITIES.
2. (H) SYMBOL DENOTES A HIGH TABLE OR DINING COUNTER WITH STOOLS.
3. (HC) SYMBOL DENOTES A HANDICAP ACCESSIBLE TABLE. ACCESSIBLE TABLES SHALL CONFORM TO ADA DIMENSIONAL AND CLEARANCE REQUIREMENTS (SEE KEYNOTES 3, 4 / THIS SHEET and PROTOTYPE DECOR DRAWINGS); AND SHALL INCLUDE THE INTERNATIONAL SYMBOL OF ACCESSIBILITY ENGRAVED / EMBOSSED (PERMANENTLY APPLIED) TO THE TABLE TOP OR TABLE EDGE.

**GENERAL NOTES** **C1**

| STORAGE TYPE | LINEAR FT. |
|---|---|
| DRY STORAGE | 45.5 |
| COLD STORAGE | 23.5 |
| FROZEN STORAGE | 6 |

**SHELVING QUANTITIES REQUIRED** **C2**

1. HOOD FIRE SUPPRESSION SYSTEM (ANSUL R-102)
2. SEE SHEET A1.1 FOR SECURITY DOOR PACKAGE.
3. MAINTAIN 44" MIN CLEAR AISLE EGRESS PATHS TO EXIT DOORS.
4. 30" x 48" CLEAR FLOOR SPACE FOR HANDICAP ACCESS.
5. DOT INDICATES CORE DRILL LOCATION. CORE DRILL LAYOUT TO BE PROVIDED BY THE SEATING VENDOR. SEE DETAIL 7/A6.5 AND SCOPE OF WORK.
6. PULL STATION @ 3'-8" A.F.F.
7. GAS LINE DOWN TO EQUIPMENT.
8. COORDINATE LOCATION OF HORIZ PVC SYRUP CHASE THROUGH WALL TO COUNTER.
9. EMPLOYEE WORK STATION. SEE DETAIL 8/A8.3. △2
10. BRINKS SAFE
11. PROVIDE 36" CLEAR PATH OF TRAVEL THROUGH KITCHEN AREAS TO ALL WORK STATIONS.
12. 36" DOUBLE ACTING GATE BY DECOR VENDOR. 32" MINIMUM NET CLEAR @ GATE OPENING.
13. NOT USED
14. MOP HANGER SHALL BE POSITIONED SUCH THAT THE MOP DRIPS DIRECTLY INTO THE MOP SINK BELOW. POSITION ITEM B-599 ACCORDINGLY. △1

**KEYNOTES** **B**


VMI architecture
Design · Planning · Interiors
637 5th Avenue San Rafael, CA 94901
415-451-2500 415-451-2595 fax
www.vmarch.com


VMI JOB NUMBER
Y1022

LICENSED ARCHITECT
HUGH EDWARD MURPHY
No. C17928
Exp. 10/31/11
STATE OF CALIFORNIA

RECORD DATES

| | |
|---|---|
| DD SUBMITTAL | 10-21-10 |
| BLDG. SUBMITTAL | 5-10-11 |
| BID SET | - |
| CONTRACT SET | - |

REVISIONS
△1 7/7/11 Health PC #1
△2 08/24/11 PC Comments/ Plan Updates

CLIENT
TACO BELL CORP
1 GLEN BELL WAY, MD# 534
IRVINE, CA 92618

SITE #286119

PROJECT
TACO BELL
840 S. Bascom Avenue
San Jose, CA 95128-2605
APN #282-42-038

TY07_AUG09P

EQUIPMENT & SEATING PLAN

A2.0

PERMIT FILE # CP10-060


W:\Data\Yum_TBY1022_San Jose_S Bascom_S286119\03_cd_current\054_1022_A2-0.dwg By: EALEXANDER Saved on: 8/22/2011 1:43:50 PM

ALL IDEAS, DESIGNS, ARRANGEMENTS AND PLANS INDICATED BY THIS DRAWING ARE OWNED BY, AND THE PROPERTY OF THIS OFFICE AND WERE CREATED, EVOLVED AND DEVELOPED FOR USE ON, AND IN CONNECTION WITH, THE SPECIFIED PROJECT. NONE OF SUCH IDEAS, DESIGNS, ARRANGEMENTS AND PLANS MAY BE USED BY OR DISCLOSED TO ANY PERSON, FIRM OR CORPORATION FOR ANY PURPOSE WHATSOEVER WITHOUT THE WRITTEN PERMISSION OF PROJECT ARCHITECT.
WRITTEN DIMENSIONS ON THESE DRAWINGS SHALL HAVE PRECEDENCE OVER SCALE DIMENSIONS. CONTRACTORS SHALL VERIFY AND BE RESPONSIBLE FOR ALL DIMENSIONS AND CONDITIONS ON THE JOB AND THIS OFFICE MUST BE NOTIFIED OF ANY VARIATION FROM THE DIMENSIONS AND CONDITIONS SHOWN BY THESE DRAWINGS. SHOP DETAILS OF ADEQUATE SCALE MUST BE SUBMITTED TO THIS OFFICE FOR APPROVAL BEFORE PROCEEDING WITH FABRICATION ON ITEMS SO NOTED.



Printed on Recycled Paper at American Draft Source

# EQUIPMENT SCHEDULE

| NO. | QTY | G.C. INST. | ITEM DESCRIPTION | MFR. & MODEL NUMBER | PLUMB | ELECT | GAS | REMARKS | NO. |
|---|---|---|---|---|---|---|---|---|---|
| | | | **B CONTRACTOR BUILDING ELEMENTS** | | | | | | |
| B-140 | 1 | X | DRIVE-THRU WINDOW W/ FLY FAN | READY ACCESS #275, WEST COAST DST W/ AA100 FLY FAN | | X | | DARK BRONZE FINISH; WINDOW SLIDES RIGHT TO LEFT ON INTERIOR ELEVATION | B-140 |
| B-150 | 1 | X | OCCUPANCY SIGN | - | | | | VERIFY TEXT WITH G.C. PRIOR TO DELIVERY; SEE DET. B/A1.2 | B-150 |
| B-215 | 1 | X | WATER HEATER | AO SMITH MODEL #BTU-120 | X | X | X | | B-215 |
| B-241 | 5 | X | SOAP DISPENSER (WALL MOUNT) | KAY 3741 | | | | SURFACE MTD | B-241 |
| B-251 | 3 | X | SANITIZER DISPENSER | KAY 3741 | | | | NOTE: KAY 3741 DISPENSER USED FOR SOAP & SANITIZER | B-251 |
| B-265 | 2 | X | ANTI-GRAFFITI MIRROR, 18" X 36" | MODEL: #304406 | | | | SURFACE MTD | B-265 |
| B-275 | 3 | X | TOILET PAPER DISPENSER | ACCUSERVE #B2890 | | | | SURFACE MTD | B-275 |
| B-290 | 3 | X | PAPER TOWEL DISPENSER | BOBRICK #B-262 | | | | SURFACE MTD. | B-290 |
| B-291 | 2 | X | PAPER TOWEL DISPENSER / TRASH 18 GALLON | BOBRICK #B-3947 | | | | SEMI-RECESSED | B-291 |
| B-300 | 2 | X | GRAB BAR 1-1/2"DIA X 36" S.S. FIN. | BOBRICK #B6806X36 | | | | SURFACE MTD | B-300 |
| B-305 | 2 | X | GRAB BAR 1-1/2"DIA X 42" S.S. FIN. | BOBRICK #B6806X42 | | | | SURFACE MTD | B-305 |
| B-400 | 2 | X | WASTE BASKET - 32 GALLON | RUBBERMAID #2632 (GREY) | | | | | B-400 |
| B-405 | 10 | X | WASTE BASKET | RUBBERMAID SLIM JIM #3541 (GREY) | | | | | B-405 |
| B-406 | 1 | X | WASTE BASKET | RUBBERMAID 28 QT #2956 (BLACK) | | | | | B-406 |
| B-410 | 2 | X | SANITARY NAPKIN RECEPTACLE | RUBBERMAID #6140 | | | | INCLUDES ACCESSORY KIT & MOUNTING HARDWARE | B-410 |
| B-599 | 2 | X | MOP SINK STATION | ISS #WST806Y | | | | | B-599 |
| B-600 | 1 | X | S.S. WIRE WALL SHELF | - | | | | 14"x36" BY EQUIP. VENDOR | B-600 |
| B-602 | 1 | X | AIR CURTAIN (42-INCH) | MARLEY #E4200-1175 | | X | | MOUNT DIRECTLY ON WALL ABOVE DOOR | B-602 |
| | | | **C COOKING EQUIPMENT** | | | | | | |
| C-016 | 1 | X | SINGLE OPEN FRYER W/ UNDER-FRYER FILTER SYSTEM | FRYMASTER #YFPH155 | | X | X | COMES WITH GAS HOSE KIT. OPTION: WITHOUT FILTER | C-016 |
| C-105 | 1 | X | RETHERMALIZER | PITCO #TB-SRTG14-2 | X | X | X | COMES WTH GAS HOSE KIT | C-105 |
| C-200 | 2 | X | SPLIT LID CLAM SHELL TOASTER | STAR #GR14SPT | | X | | POWERED BY PRODUCTION LINE | C-200 |
| C-240 | 2 | X | CHEESE MELTER (DOUBLE) | A. J. ANTUNES #TBS-2X | X | X | | POWERED BY PRODUCTION LINE | C-240 |
| C-400 | 1 | X | COOK TIMER | FAST #TBZAP12 | | X | | FOR THE RETHERMALIZER | C-400 |
| | | | **E EXHAUST HOODS/FIRE SUPP.** | | | | | | |
| E-274 | 1 | X | TB HOOD | GEN. VENTILATION | | X | | PRE-PIPED FOR ANSUL SUPPRESSION | E-274 |
| E-276 | 1 | X | TB HOOD (CHEESE MELTER HOOD) | GEN. VENTILATION | | X | | PRE-PIPED FOR ANSUL SUPPRESSION | E-276 |
| | | | **F OFFICE/EMPLOYEE/MUSIC/MISC.** | | | | | | |
| F-001 | 1 | X | FILE CABINET (2 DRAWER HIGH) 18" x 36" x 27"H | 9336P2FIH | | | | IN OFFICE. SEE SHEET A8.1 | F-001 |
| F-021 | 1 | X | CHAIR - OFFICE | HON #5831 | | | | IN OFFICE. SEE SHEET A8.1 | F-021 |
| F-025 | 1 | X | CHAIR - EMPLOYEE ROOM | VIRCO #162 | | | | | F-025 |
| F-030 | 1 | X | COAT HOOKS | ISS #HOOK246R2Y | | | | | F-030 |
| F-038 | 1 | X | EMPLOYEE WORKSTATION | ISS #WST867Y | | | | LOCKERS TO BE WALL MOUNTED | F-038 |
| F-040 | 1 | | OFFICE COMPUTER | PAR | | X | | IN OFFICE. SEE SHEET A8.1 | F-040 |
| F-050 | 1 | | ALTERNATE PAYMENT ROUTER BOX | YUM | | X | | | F-050 |
| F-060 | 1 | | MONITOR-OFFICE | YUM | | | | IN OFFICE. SEE SHEET A8.1 | F-060 |
| F-080 | 1 | | OFFICE PRINTER/ COPIER/ FAX/ SCANNER | PAR | | X | | IN OFFICE. SEE SHEET A8.1 | F-080 |
| F-090 | 5 | | UPS (UN-INTERUPTABLE POWER SUPPLY) | PAR | | X | | | F-090 |
| F-100 | 1 | | MONEY COUNTER | TELLERMATE #TIX3000 | | X | | | F-100 |
| F-131 | 1 | | MUSIC SYSTEM | MUZAK #6848. LOCAL LEASE | | X | | MUZAK (LOCAL LEASE) | F-131 |
| F-160 | 3 | X | DROP SAFE | PERMA VAULT #PRO-10 | | | | | F-160 |
| F-174 | 1 | X | SAFE WITH TOUCH SCREEN CONTROLS | BRINKS A-GALILEO 111-01 SAFE | | X | | 3-DOOR | F-174 |
| F-211 | 1 | X | CLOCK | B&B SYSTEMS #03060425 | | | | IN OFFICE. SEE SHEET A8.1 | F-211 |
| F-270 | 1 | X | FIRST AID KIT | SWIFT #68-UFPC | | | | IN OFFICE. SEE SHEET A8.1 | F-270 |
| F-334 | 1 | X | OFFICE WORKSTATION | ISS #2454MOS4EA | | | | IN OFFICE. SEE SHEET A8.1 | F-334 |
| F-335 | 1 | X | OFFICE WORKSTATION | ISS #2466MOM4EA | | | | IN OFFICE. SEE SHEET A8.1 | F-335 |
| F-360 | 1 | X | VIDEO TRAINING UNIT | DELL-LATITUDE E5500 | | X | | LAPTOP | F-360 |
| F-500 | 2 | X | STACKABLE HIGH CHAIR | KOALA (#HCG WITH GREY FINISH) | | | | | F-500 |
| F-700 | 1 | X | ROOF ACCESS LADDER | PRECISION LADDERS | | | | W/ SECURITY GATE AND 6'-0" STEP LADDER | F-700 |
| F-701 | 1 | X | ROOF SCUTTLE | BILCO | | | | 30"W X 36"D (NET CLEARANCES) | F-701 |
| F-915 | 2 | X | FLOOR MAT 3' x 5' | ENTRANCE, INC. #41150012 | | | | RUBBERIZED | F-915 |
| F-920 | 1 | X | FLOOR MAT 2' x 8' | CREST #249614 ANTISLIP | | | | RUBBERIZED | F-920 |
| | | | **K WORKSTATIONS/SHELVING/CARTS** | | | | | | |
| K-160 | 1 | X | MOBILE PREP WORKSTATION | ISS #WST256YA | | | | | K-160 |
| K-210 | 1 | X | PREP SINK WORKSTATION 50" TRACK | ISS #WST255E | | | | WALL TRACK SHELVING | K-210 |
| K-221 | 1 | X | 3 COMP. SINK WORKSTATION 96" TRACK | ISS #DS-1F | | | | WALL TRACK SHELVING | K-221 |
| K-380 | 1 | X | FRY WORKSTATION 30"W x 30"D x 75"H | ISS #FRYTAB3030YA | | | | | K-380 |
| K-420 | 1 | X | CARBONATOR PLATFORM SHELF 18" X 24" | ISS #WST34Y | | | | | K-420 |
| K-490 | 2 | X | FRONT COUNTER SHELVING 18" x 24" x 24" (2 TIER) | ISS #WST440Y | | | | UNDER SERVING COUNTER | K-490 |
| K-499 | 1 | X | SHELVING UNIT 30" x 48" x 74" (2 TIER) | ISS #WST235Y | | | | UNDER SERVING COUNTER | K-499 |
| K-517 | 1 | X | PREP RACK 18" X 60" X 76" (6 TIER) | ISS #WST1464Y | | | | | K-517 |
| K-518 | 1 | X | FRY RACK 24" X 36" X 76" (6 TIER) | ISS #WST1470Y | | | | | K-518 |
| K-519 | 1 | X | LARGE PKG. RACK 18" X 48" X 76" (4 TIER) | ISS #WST1472Y | | | | | K-519 |
| K-520 | 1 | X | BACKUP #1 RACK 18" X 72" X 76" (4 TIER) | ISS #WST1544Y | | | | | K-520 |
| K-521 | 1 | X | BACKUP #2 RACK 18" X 72" X 76" (4 TIER) | ISS #WST1547Y | | | | | K-521 |
| K-523 | 1 | X | CUP & LID RACK 18" X 60" X 76" (3 TIER) | ISS #WST1580Y | | | | | K-523 |
| K-528 | 2 | X | FUTURE RACK 18" X 72" X 76" (5 TIER) | - | | | | | K-528 |
| K-603 | 1 | X | SHELVING UNIT 18" x 42" x 76"H (5 TIER) | ISS #WST331Y | | | | | K-603 |
| K-604 | 2 | X | SHELVING UNIT 18" x 48" x 76"H (5 TIER) | ISS #WST331Y | | | | | K-604 |
| K-657 | 7 | X | SHELVING UNIT 24" X 72" X 76"H (5 TIER) | ISS #SU24728Y | | | | | K-657 |

# EQUIPMENT SCHEDULE

| NO. | QTY | G.C. INST. | ITEM DESCRIPTION | MFR & MODEL NUMBER | PLUMB | ELECT | GAS | REMARKS | NO. |
|---|---|---|---|---|---|---|---|---|---|
| | | | **L LIGHTING/SIGNAGE/MENUBOARDS** | | | | | | |
| L-010 | 1 | X | INTERIOR MENU BOARD PACKAGE - ROTATING, 10-PANEL | POSTERLOID #TBLED10P2010 | | X | | LED INTERNALLY ILLUMINATED | L-010 |
| L-090 | 1 | X | OCB | HYPERACTIVE #TDM-HX1-H05-TCB REQUIRES THE USE OF XPIENT POS SYSTEM | | | | FRANCHISE OPTION L-095 TEXAS DIGITAL # AV150IECEAVNG60 | L-090 |
| L-150 | 1 | X | SECURITY DOOR DANGER SIGN | ADVERCO#ADVCUSTOM | | | | ORDERED DIRECT FROM YRFS | L-150 |
| | | | **N SINKS/DISHWASHERS** | | | | | | |
| N-040 | 1 | X | 3-COMP POWER SOAK 102"L x 31"D (L TO R) | METCRAFT #PS6746 | X | X | | W/ PRE-RINSE,CLICK&CLEAN SYSTEM & (2) T & SB-2466 FAUCETS | N-040 |
| N-053 | 5 | X | HAND SINK (KITCHEN & RESTROOMS) | AERO #HS-MOD | X | | | | N-053 |
| N-071 | 1 | X | MOP SINK FAUCET | T&S #B-2465 | X | | | | N-071 |
| N-130 | 1 | X | 1 COMP. SINK FAUCET | T&S FAUCET B-2463 | X | | | FOR N-698 | N-130 |
| N-133 | 3 | X | HAND SINK FAUCET | T&S FAUCET B-2456-W | X | | | SPLASH MOUNTED, FOR N-053 | N-133 |
| N-150 | 3 | X | HAND SINK FOOT PEDAL | T&S B-0507 | X | | | FOR N-053 | N-150 |
| N-171 | 1 | X | 1 COMP. SINK WASTE DRAIN LEVER | T&S FAUCET S-20 | X | | | 2" TWIST TYPE, FOR N-698 | N-171 |
| N-202 | 1 | X | MOP SINK 24"X24" FLOOR MOUNT SINK | AERO MANUFACTURING CO., INC. #3MP-2121-6 | X | | | INCLUDES (2) 24"X36" WALL PANELS | N-202 |
| N-698 | 1 | X | 1 COMP PREP SINK 53"W X 27"D X 35 1/2"H | AERO #2F1211617LR | X | | | | N-698 |
| | | | **P FOOD PREPARATION** | | | | | | |
| P-305 | 1 | X | REVERSE OSMOSIS SYSTEM | EVERPURE #MRS-20T | X | | | REQUIRES FLOOR SINK | P-305 |
| P-307 | 1 | X | DRY PRODUCTION LINE | DELFIELD - E30600686 & DUKE - E90000149 | X | X | | MFR. PROVIDED PANELS/ BREAKERS SHALL BE FULLY RATED (AIC) TO MEET ELECTRICAL COMPANY SHORT CIRCUIT FAULT CURRENT. NOTE THE AVAILABLE FAULT CURRENT= 25,000 AIC | P-307 |
| P-417 | 1 | X | 8-CHANNEL TIMER | FAST #TRACK2X4TB | | X | | ALTERNATE: PRINCE CASTLE #755HM8TB | P-417 |
| P-450 | 2 | X | HOT WATER SYSTEM | BUNN-O-MATIC #H5X-40-208 | X | X | | W/ SHELF, BRACKET & FILTER | P-450 |
| P-540 | 3 | X | STORAGE BINS | RUBBERMAID #3600 | | | | | P-540 |
| P-550 | 1 | X | KNIFE RACK | EDLUND #KR-99 | | | | | P-550 |
| P-673 | 1 | X | WORK TABLE, 36" X 30" | ISS #WST908A | | | | FOR RETHERMALIZER AND HOT WATER | P-673 |
| | | | **R REFRIGERATION** | | | | | | |
| R-030 | 1 | X | 1/2 HT. FREEZER (RH) STD. CASTERS | DELFIELD 407CA, RH | | X | | | R-030 |
| R-034 | 1 | X | MINI REFRIGERATOR | SILVER KING SKPS3 | | X | | | R-030 |
| | | | **S SERVING/DRIVE-THRU** | | | | | | |
| S-004 | 1 | X | HEAT CABINET - FULL HEIGHT - (1) RH | BEVLES #CS82-CH8 120RH | | X | | W/ 8 SHELVES EACH | S-004 |
| S-005 | 1 | X | HEAT CABINET - FULL HEIGHT - (1) LH | BEVLES #CS82-CH8 120LH | | X | | W/ 8 SHELVES EACH | S-005 |
| S-065 | 1 | X | DESSERT TOWER | HATCO #GRBW-24D | | X | | MOUNT ON PRODUCTION LINE OVER SHELF | S-065 |
| S-201 | 1 | X | DRIVE-THRU TIMER SYSTEM | HME #C11422TB | | X | | MOUNT ON DT WINDOW HEADER | S-201 |
| S-220 | 1 | X | HEADSET HOOKS | HME #C10544 | | | | IN OFFICE. SEE SHEET A8.1 | S-220 |
| S-240 | 1 | X | OCB SWITCH BOX | DELPHI/TEXAS DIGITAL | | X | | WALL MOUNTED IN MANAGERS OFFICE, COMES W/OCB | S-240 |
| S-274 | 1 | X | BEVERAGE COUNTER DRIVE THRU (36" x 61") | ISS #WST1242YA | | | | W/ ISS #CONDTOW24L | S-274 |
| S-275 | 1 | X | PICK-UP DRIVE-THRU COUNTER (30" x 54") | ISS #WST690YA | | | | W/ ISS #CONDTOW24L | S-275 |
| S-284 | 1 | X | BEVERAGE DISPENSER - SELF-SERVE | CORNELIUS 611057625 | X | X | | | S-284 |
| S-285 | 1 | X | BEVERAGE DISPENSER - DRIVE THRU | SERVEND NGF-250QD | X | X | | OR CORNELIUS IDC255 PROGATE 5 | S-285 |
| S-286 | 1 | X | WATER FILTER SYSTEM | SHURFLO # WB6-M3-22-003 | X | X | | FRACHISEES CAN USE SELECTO #TB5/620-5 | S-286 |
| S-308 | 1 | X | SELF-SERVE DRINK STATION (90" x 45" x 37") | CARTER HOFFMAN #CH3TDS90N55 | X | X | | | S-308 |
| S-319 | 0 | X | PRE-PAY COUNTER (18"X36") | ISS #WST1230A | | | | | S-319 |
| S-443 | 1 | X | TABLE TOP STRAW AND LID DISPENSER | XXXXXXXXXXX | | | | | S-443 |
| S-454 | 2 | X | T-SHIRT BAG HOLDER | FRANKE #791166 | | | | | S-454 |
| S-456 | 1 | X | 30" x 30" FRUITISTA TABLE | ISS #WST1185 | | | | | S-456 |
| S-460 | 2 | X | TEARDROP BAG HOLDER | APW #14251 | | | | | S-460 |
| S-481 | 2 | X | CUP DISPENSER (DRIVE-THRU & FRONT COUNTER) | A.J. ANTUNES #DACS50 | | | | W/ ANGLED MOUNTING BRACKET OMNITEAM CDB-DTA | S-481 |
| S-489 | 2 | X | DIGITAL SCALE | EDLUND DS-10 | | X | | | S-489 |
| S-513 | 2 | X | ICE MAKER (PLACED ON TOP OF DRINK MACHINES) | MANITOWOC #SY-1474C | X | X | | W/ ROOF MOUNTED CONDENSORS FRACHISEES CAN USE HOSHISAKI KMS-1230 | S-513 |
| S-540 | 1 | | PEPSI BOOSTER TANK | | X | X | | SEE SCOPE OF WORK (PEPSI) | S-540 |
| S-543 | 1 | X | FROZEN BEVERAGE DISPENSER | CORNELIUS VIPER #621360041TB | X | X | | W/ BOOSTER AND INSTALLATION KIT | S-543 |
| S-544 | 1 | | ICED TEA DISPENSER | TETLEY TDON-3.5 | | | | | S-544 |
| S-546 | 1 | | ICE TEA BREWER | TETLEY TB3Q | X | X | | | S-546 |
| S-550 | 1 | | BAG-N-BOX SYRUP RACK | CORNELIUS/REMCOR BNB12B8P | X | | | FLO-3REG-2CRB | S-550 |
| S-570 | 2 | | CARBONATOR | CORNELIUS/REMCOR | X | X | | SHELF MOUNTED BELOW EACH DRINK DISPENSER | S-570 |
| S-580 | 1 | | CO2 (BULK) TANK | MVE #11805373 | | | | WITHOUT IMPURITY RING | S-580 |
| S-600 | - | X | BUNDLED SYRUP LINES | CORNELIUS/REMCOR TUBE BUNDLE | X | | | SEE SCOPE OF WORK (PEPSI) | S-600 |
| | | | **U SECURITY/COMM./FIRE PROT./POS** | | | | | | |
| U-019 | 1 | X | CCTV DVR & MONITOR | MARTCO-WITH NUVICO DVR | | X | | WITH 1 CAMERA. SEE DETAIL 2/E6.0 FOR MNTG. MONITOR | U-019 |
| U-024 | 1 | X | BASE STATION - D/T COMM. SYSTEM | HME SYSTEM #C113466 IQ SYSTEM | | X | | 6 COMMUNICATORS, +7'-0" A.F.F. | U-024 |
| U-048 | 1 | X | SECURITY SYSTEM | ADT #TBDV40 | | X | | | U-048 |
| U-061 | 2 | | CREDIT CARD READER (VSAT) | | | X | | | U-061 |
| U-070 | 3 | | RECEIPT PRINTER | PAR | | X | | 2 FOR F/C AND 1 D/T | U-070 |
| U-100 | 4 | | POS/ORDER ENTRY TERMINAL | PAR | | X | | 2 FOR F/C AND 2 D/T | U-100 |
| U-121 | 3 | | CASH DRAWER BRACKETS | PAR | | | | SEE SCOPE OF WORK | U-121 |
| U-152 | 3 | | CASH DRAWER | PAR | | | | SEE SCOPE OF WORK | U-152 |
| U-238 | 5 | | KITCHEN MONITOR | PAR | | X | | | U-238 |
| U-239 | 3 | X | MONITOR CEILING MOUNTED BRACKET | PAR | | | | FOR ONE MONITOR EACH | U-239 |
| U-242 | 1 | X | MONITOR CEILING MOUNTED BRACKET | PAR | | | | FOR TWO MONITORS EACH | U-242 |
| U-250 | 6 | | BUMP BAR | PAR | | | | WITH MOUNTING PLATE | U-250 |
| | | | **W WALK-IN COOLERS/FREEZERS** | | | | | | |
| W-078 | 1 | X | WALK-IN COOLER/FREEZER | ICS/KOLPAK/ NORLAKE | X | X | | 1 COOLER, 1 FREEZER | W-078 |

- B D/T CLEARANCE BAR, SECURITY DOOR, WATER HEATER, D/T WINDOW, RESTROOM ACCESSORIES, AIR DOOR/CURTAIN, MOP SINK, HAND SINK ACC., CORNER GUARDS, MATS
- C FRYERS, OVENS, GRILLS, RETHERMALIZERS, TOASTERS, MICROWAVES
- E KITCHEN EXHAUST HOODS, FIRE SUPPRESSION EQUIPMENT
- F SAFE, OFFICE EQUIPMENT, EMPLOYEE STORAGE/BREAK
- K SHELVING, WORKSTATIONS, CARTS, RACKS, DOLLIES
- L SITE LIGHTING, SIGNAGE, MENUBOARDS
- N POWERSOAK, KITCHEN HAND SINKS, PREP. SINKS, DISHWASHERS
- P M.A.P.S. LINES, I-LINES, PACK LINES, BREADERS, MARINATORS, HOT WATER, WORK TABLES, CHEESE MELTERS
- R REFRIGERATORS AND FREEZERS (NOT WALK-IN)
- S DRINK SYSTEMS & EQUIP., HEAT CABINETS, STAGERS, WARMERS, SERVING EQUIP., D/T EQUIP.
- U SECURITY SYSTEM, LOCKS, CCTV, D/T COMMUNICATIONS/POS SYSTEM, POS EQUIP.
- W WALK-IN COOLERS/FREEZERS

VMI architecture
Design · Planning · Interiors
637 5th Avenue San Rafael, CA 94901
415-451-2500 415-451-2595 fax
www.vmarch.com

VMI JOB NUMBER
Y1022

LICENSED ARCHITECT
HUGH EDWARD MURPHY
No. C17928
REN. 10/31/11
STATE OF CALIFORNIA

RECORD DATES

| | |
|---|---|
| DD SUBMITTAL | 10-21-10 |
| BLDG. SUBMITTAL | 6-10-11 |
| BID SET | - |
| CONTRACT SET | - |

REVISIONS

| | | |
|---|---|---|
| 1 | 7/7/11 | Health PC #1 |
| 2 | 08/24/11 | PC Comments/ Plan Updates |

CLIENT
TACO BELL CORP
1 GLEN BELL WAY, MD# 534
IRVINE, CA 92618

SITE #286119

PROJECT
TACO BELL
840 S. Bascom Avenue
San Jose, CA 95128-2605
APN #282-42-038

TY07_AUG09P

EQUIPMENT SCHEDULE

A2.1

PERMIT FILE # CP10-060

W:\Data\Yum_TB\Y1022_San Jose_S Bascom_S286119\03_cd_current\056_1022_A2-1.dwg By: EALEXANDER Saved on: 8/19/2011 4:34:00 PM

ALL IDEAS, DESIGNS, ARRANGEMENTS AND PLANS INDICATED BY THIS DRAWING ARE OWNED BY, AND THE PROPERTY OF THIS OFFICE AND WERE CREATED, EVOLVED AND DEVELOPED FOR USE ON, AND IN CONNECTION WITH, THE SPECIFIED PROJECT. NONE OF SUCH IDEAS, DESIGNS, ARRANGEMENTS OR PLANS SHALL BE USED BY OR DISCLOSED TO ANY PERSON, FIRM OR CORPORATION FOR ANY PURPOSE WHATSOEVER WITHOUT THE WRITTEN PERMISSION OF PROJECT ARCHITECT. WRITTEN DIMENSIONS ON THESE DRAWINGS SHALL HAVE PRECEDENCE OVER SCALE DIMENSIONS; CONTRACTORS SHALL VERIFY AND BE RESPONSIBLE FOR, ALL DIMENSIONS AND CONDITIONS ON THE JOB AND THIS OFFICE MUST BE NOTIFIED OF ANY VARIATION FROM THE DIMENSIONS AND CONDITIONS SHOWN BY THESE DRAWINGS. SHOP DETAILS OF ADEQUATE SCALE MUST BE SUBMITTED TO THIS OFFICE FOR APPROVAL BEFORE PROCEEDING WITH FABRICATION ON ITEMS SO NOTED.

Printed on Recycled Paper at American Draft Source

W:\Data\Yum_TB\Y1022_San Jose_S 286119\03_cd_current\100_1022_M1-0.dwg By: EALEXANDER Saved on: 8/22/2011 10:24:33 AM
ALL IDEAS, DESIGNS, ARRANGEMENTS OR PLANS INDICATED BY THIS DRAWING ARE OWNED BY, AND THE PROPERTY OF THIS OFFICE, AND WERE CREATED, EVOLVED AND DEVELOPED FOR USE ON, AND IN CONNECTION WITH, THE SPECIFIED PROJECT. NONE OF SUCH IDEAS, DESIGNS, ARRANGEMENTS OR PLANS SHALL BE USED BY OR DISCLOSED TO ANY PERSON, FIRM OR CORPORATION FOR ANY PURPOSE WHATSOEVER WITHOUT THE WRITTEN PERMISSION OF PROJECT ARCHITECT.
WRITTEN DIMENSIONS ON THESE DRAWINGS SHALL HAVE PRECEDENCE OVER SCALE DIMENSIONS. CONTRACTORS SHALL VERIFY AND BE RESPONSIBLE FOR ALL DIMENSIONS AND CONDITIONS ON THE JOB AND THIS OFFICE MUST BE NOTIFIED OF ANY VARIATION FROM THE DIMENSIONS AND CONDITIONS SHOWN BY THESE DRAWINGS. SHOP DETAILS OF ADEQUATE SCALE MUST BE SUBMITTED TO THIS OFFICE FOR APPROVAL BEFORE PROCEEDING WITH FABRICATION ON ITEMS SO NOTED.

## GENERAL:

1. LOCATE, CUT AND FRAME ROOF OPENINGS AS SHOWN FOR ALL HVAC EQUIPMENT AND EXHAUST FANS.
2. IT IS VERY IMPORTANT THAT ACCURATE MEASUREMENTS ARE USED WHEN LOCATING EXHAUST FAN ROOF OPENINGS TO ENSURE THAT NO ADDITIONAL OFF-SETS ARE REQUIRED IN THE EXHAUST DUCTWORK. COORDINATE ROOF OPENINGS WITH THE KITCHEN EQUIPMENT.
3. PROVIDE ANY FRAMING REQUIRED FOR DIFFUSER INSTALLATION IN HARD CEILING.

## HVAC:

1. INSTALLATION SHALL CONFORM TO THE ENERGY CONSERVATION DESIGN MANUAL STANDARDS FOR NEW NONRESIDENTIAL BUILDINGS.
2. ALL WORK AND MATERIALS SHALL COMPLY WITH GOVERNING CODES, SAFETY ORDERS AND REGULATIONS.
3. OBTAIN AND PAY FOR ALL NECESSARY PERMITS, FEES AND INSPECTIONS REQUIRED BY GOVERNING AUTHORITIES.
4. PROVIDE CONDUIT FOR LINE AND LOW VOLTAGE WIRING, LINE VOLTAGE WIRING SWITCHES AND FINAL CONNECTIONS.
5. ANY EQUIPMENT THAT IS SUBSTITUTED SHALL FIT IN THE SPACE PROVIDED WITH ADEQUATE ROOM FOR SERVICING, INCLUDING SUBSTITUTE EQUIPMENT NAMED IN THE SPECIFICATIONS. SUBMIT A 1/4" SCALE DRAWING OF ALL EQUIPMENT SUBSTITUTED FOR APPROVAL PRIOR TO INSTALLATION, INCLUDING, BUT NOT LIMINTED TO, STRUCTURAL AND ARCHITECTURAL IMPACT, CLEARANCE REQUIREMENTS AND UTILITY REQUIREMENTS.
6. FOR INSTALLATION OF RECHARGEABLE REFRIGERANT LINES FROM ICE MACHINE TO CONDENSER ON ROOF. SEE SCOPE OF WORK.
7. HVAC UNITS SHALL BE MOUNTED LEVEL ON ROOF CURBS FLASHED WATER TIGHT INTO ROOFING.
8. ALL SUPPLY AND RETURN DUCTWORK SHALL BE EXTERNALLY INSULATED UNLESS NOTED TO BE INTERNALLY LINED.
9. ALL SUPPLY AND RETURN DUCTS SHALL BE RIGID SHEETMETAL, WITH THE EXCEPTION OF THE LAST 5'-0", WHICH MAY BE FLEX.
10. SMOKE DETECTOR SHALL BE INSTALLED IN THE HVAC UNIT SUPPLY AIR PLENUM AND SHALL DEACTIVATE ROOFTOP UNIT UPON SENSING SMOKE PER CMC REQUIREMENTS.
11. GREASE HOOD EXHAUST DUCT TO BE RIGID 16 GA MINIMUM WELDED SHEETMETEL. GRIND ALL WELDS SMOOTH. PROVIDE 3M FIRE BARRIER DUCT WRAP FOR GREASE EXHAUST DUCTS. SEE 15/M4.0.
12. ALL BRANCH DUCTS FEEDING INDIVIDUAL DIFFUSERS SHALL HAVE DAMPERS AT TAKEOFFS FOR AIR BALANCING. PROVIDE ACCESS PANELS TO DAMPERS. SEE 8/M4.0.
13. ALL UTILITY PIPING FOR HVAC UNITS SHALL RUN UP THROUGH ROOF INSIDE EACH UNIT'S ROOF CURB.
14. ALL OUTSIDE AIR INTAKES SHALL BE A MINIMUM OF 10'-0" FROM EXHAUST FANS AND / OR PLUMBING VENTS.
15. SEE 8/M1.0 AND SCOPE OF WORK FOR DESCRIPTION OF HVAC PACKAGE TO BE PURCHASED THROUGH YUM! BRANDS NATIONAL CONTRACT.
16. FINAL HVAC SYSTEM TESTING AND BALANCING SHALL BE PERFORMED BY INDEPENDENT AGENT CONTRACTED DIRECTLY BY THE OWNER. A RE-TEST IS MANDATORY FOR A FALSE START (I.E. NO POWER UPON AGENT'S ARRIVAL, EQUIPMENT NOT WIRED, ETC.) AND SHALL BE A COST INCURRED BY THE G.C. IN THE EVENT A SYSTEM / STORE RECEIVES A GRADE OF 5 OR BELOW AS A RESULT OF THE HVAC SYSTEM PERFORMANCE OR OPERATIONAL DEFICIENCIES, OWNER WILL REQUEST A RE-TEST AND THE COST FOR SAME SHALL BE ALSO INCURRED BY THE GENERAL CONTRACTOR.
17. TRANE PROGRAMMABLE THERMOSTAT MODEL #BAYSENS019B, PROVIDED WITH TRANE PACKAGE.
18. TRANE THERMOSTAT SENSOR (REMOTE) MODEL #4190-7015, PROVIDED WITH TRANE PACKAGE.
19. RTU-1 AND RTU-2 BLOWERS TO BE ELECTRICALLY INTERLOCKED WITH HOOD EXHAUST FAN EF-1 PER REQUIREMENTS OF 2010 CALIFORNIA MECHANICAL CODE.

**GENERAL NOTES** | 10

| SYMBOL & ABBREV. | | DESCRIPTION |
|---|---|---|
| | SA/SUP | SUPPLY AIR (RISE/DROP) |
| | RA/RET | RETURN AIR DUCT (RISE/DROP) |
| | EA/EXH | EXHAUST AIR DUCT (RISE/DROP) |
| | CD/SR | CEILING DIFFUSER/SUPPLY REGISTER (ARROWHEAD REPRESENTS NUMBER OF THROW) |
| | RR/RG | RETURN REGISTER/GRILLE |
| | ER/EG | EXHAUST REGISTER/GRILLE |
| | | RECTANGULAR DUCT ELBOW WITH TURNING VANES |
| | FC | FLEXIBLE CONNECTION |
| | MVD | MANUAL VOLUME DAMPER |
| | FD | FIRE DAMPER |
| | (L) | DUCT LINING (1" THICK UNLESS OTHERWISE NOTED) |
| | | SINGLE LINE DUCT BRANCH TAKEOFF |
| | | DUCT TRANSITION (RECTANGULAR TO ROUND) |
| | FLEX | FLEXIBLE DUCT (5'-0 MAXIMUM) |
| T | T-STAT | PROGRAMMABLE THERMOSTAT, PROVIDED WITH TRANE PACKAGE. |
| TS | | THERMOSTAT SENSOR (REMOTE), PROIVDED WITH TRANE PACKAGE. |
| — D — | D | CONDENSATE DRAIN |
| Ø | DIA. | DIAMETER |
| X-X 0000 | | AIR DEVICE DESIGNATION |
| R | RESET | SMOKE DETECTOR RESET |

| SYMBOL & ABBREV. | DESCRIPTION |
|---|---|
| A/C . AC | AIR CONDITIONING |
| BDD | BACK DRAFT DAMPER |
| CB | CIRCUIT BREAKER |
| CLG. | CEILING |
| CONN. | CONNECT/CONNECTION |
| CONT. | CONTINUATION |
| CONTR | CONTRACTOR |
| CFM | CUBIC FEET PER MINUTE |
| DET. | DETAIL |
| DISC. | DISCONNECT |
| DTR | DOWN THRU ROOF |
| EF | EXHAUST FAN |
| (E) | EXISTING |
| GA. | GAGE/GAUGE |
| GC | GENERAL CONTRACTOR |
| HVAC | HEATING, VENTILATING, AND AIR CONDITIONING |
| MFR. | MANUFACTURER |
| MECH. | MECHANICAL |
| (N) | NEW |
| OA/OSA | OUTSIDE AIR |
| OBD | OPPOSED BLADE DAMPER |
| S/S | STAINLESS STEEL |
| TYP. | TYPICAL |
| UON | UNLESS OTHERWISE NOTED |
| UTR | UP THRU ROOF |

**MECHANICAL SYMBOLS** | 12

| MARK | AREA SERVED | FAN DATA | | | | | COOLING CAPACITY | | | HEATING CAPACITY | | | | UNIT ELECT DATA | | | MAX UNIT WEIGHT (LBS) | MANUFACTURER AND MODEL NUMBER | REMARKS |
|---|---|---|---|---|---|---|---|---|---|---|---|---|---|---|---|---|---|---|---|
| | | SUPPLY CFM | MIN O.A. CFM | ESP | HP | RPM | NOM TONS | MIN CAP (MBH) TOT/SEN | MIN EER | INPUT STAGE (MBH) | OUTPUT (MBH) | STAGES | AFUE | VOLTS/ PH | MCA | MOCP | | | |
| RTU-1 | DINING | 2400 | 800 | .5" | 1 | 1115 | 6 | 72/61 | 12.6 | 80 | 64 | 1 | 80 | 208/3 | 34 | 50 | 1000 | TRANE YHC072E3 | SEE NOTES 1,2,3,4,6 |
| RTU-2 | KITCHEN | 3600 | 1700 | .5" | 3 | 1110 | 10 | 117/92 | 11.3 | 150 | 120 | 2 | 80 | 208/3 | 50 | 60 | 1700 | TRANE YHC120E3 | SEE NOTES 1,2,3,4,5,6 |
| | | | | | | | | | | | | | | | | | | | |

NOTES:
1. LISTED CAPACITY IS GROSS COOLING CAPACITY AT 80°F DB/67°F WB EAT AND 95°F AMBIENT. OUTDOOR DESIGN CONDITION, SUMMER: 95°F DB & 74°F WB, WINTER: 17°F. ADJUST SELECTION BASED ON ACTUAL SITE CONDITIONS AND ACTUAL MOTOR HEAT.
2. SPECIFIED RTU'S ARE DOWN DISCHARGE PACKAGED GAS / ELECTRIC ROOFTOP UNITS WITH MINIMUM 2-STAGE COOLING. INCLUDES THROUGH THE UNIT BOTTOM POWER, GAS & CONDENSATE DRAIN. GAS PIPING SHALL BE FACTORY PIPED WITH SHUT-OFF OUTSIDE OF UNIT.
3. SPECIFIED UNIT INCLUDES HINGED ACCESS DOORS, 2" PLEATED FILTERS, ECONOMISER, BAROMETRIC RELIEF DAMPER, CIRCUIT BREAKER WITH SINGLE POINT WIRING, HAIL GUARD, AND FACTORY FABRICATED, KNOCK-DOWN ROOF CURB.
4. SPECIFIED UNIT INCLUDES A 120 VOLT CONVENIENCE OUTLET AND SMOKE DUCT DETECTOR IN THE SUPPLY PLENUM OF UNIT.
5. SPECIFIED UNIT INCLUDES SUPPLY AIR TEMPERING CONTROL* WITH REMOTE MOUNTED TEMPERATURE SENSOR* AS INDICATED ON PLANS.
6. SPECIFIED UNIT INCLUDES THE FACTORY INSTALLATION OF A XDX VALVE.

*THESE UNIT OPTIONS ARE VARIABLE AND NEED TO BE SELECTED AS ACTUAL SITE CONDITIONS DICTATE. PLEASE USE THE FOLLOWING CRITERIA AS A GUIDE AND ALSO CONTACT THE TRANE LOUISVILLE NATIONAL ACCOUNT TEAM FOR ADDITIONAL SUPPORT:
SUPPLY AIR TEMPERING: WINTER DESIGN DB TEMP. 40 DEG. F OR LESS
HOT GAS REHEAT: RTU-1 (DINING) SUMMER DESIGN WB TEMP. 74 DEG. F OR GREATER. RTU-2 (KITCHEN) SUMMER DESIGN WB TEMP. 75 DEG. F OR GREATER.
STAINLESS STEEL HEAT EXCHANGER: ONLY REQUIRED FOR RTU-2. KITCHEN: WINTER DESIGN DB TEMP. -10 DEG. F. OR LESS

**HVAC UNIT SCHEDULE** | 1

| MARK | CFM | SP | RPM | HP | ELECT | STARTER | ACCESSORIES | | | | | MANUFACTURER AND MODEL NUMBER | REMARKS |
|---|---|---|---|---|---|---|---|---|---|---|---|---|---|
| | | | | | | | DISC | BDD | BRK SCWREN | V-BELT | D-DR | | |
| EF-1 | 1667 | 1.25 | 1389 | 3/4 | 120/1 | | X | | X | X | | STRATOVENT SV85HP COOK 165HVD10 | SEE NOTES 1,2,4,5,6 & 9 |
| EF-2 | 400 | .3" | 1519 | 1/8 | 120/1 | | X | X | X | | X | COOK 90C15DL | SEE NOTES 3,6,7 & 8 |
| EF-3 | 350 | .5" | 1310 | .13 | 120/1 | | X | X | X | | X | STRATOVENT SV-DR12HFA | SEE NOTES 3,6,7,8,9 |
| | | | | | | | | | | | | | |
| | | | | | | | | | | | | | |

REMARKS:
1. UL 762 LISTED (GREASE)
2. VENTED ROOF CURB
3. FLAT ROOF CURB
4. GREASE TROUGH
5. HINGED SUB-BASE OR KIT
6. WEATHERPROOF PRE-WIRED DISCONNECT SWITCH
7. PROVIDE PRE-WIRED SOLID STATE SPEED CONTROLLER
8. BACKDRAFT DAMPER
9. FAN AND CURB PROVIDED BY HOOD SUPPLIER MC TO INSTALL

**EXHAUST FAN SCHEDULE** | 2

| MARK | QUANTITY | NECK SIZE | DIFFUSER FACE OR CEILING GRID SIZE | TYPE | | | AIR PATTERN / CFM RANGE | MOUNTING | | DUTY | | | MATERIAL | | MANUFACTURER | MODEL NUMBER | REMARKS 2 |
|---|---|---|---|---|---|---|---|---|---|---|---|---|---|---|---|---|---|
| | | | | DIFFUSER | REGISTER | GRILLE | | LAY-IN | SURFACE | SUPPLY | RETURN | EXHAUST | ALUMINUM | STEEL | | | |
| S-1 | 6 | 10"Ø | 24x24 | X | | | 4W / 330 | X | | X | | | X | | TITUS | TMSA-AA | BLACK FINISH |
| S-2 | 2 | 12"Ø | 24x24 | X | | | 4W / 600 | X | | X | | | X | | TITUS | TMSA-AA | VERTICAL DISCHARGE |
| S-3 | 3 | 12"Ø | 24x24 | X | | | 3W / 600 | X | | X | | | X | | TITUS | TMSA-AA | VERTICAL DISCHARGE |
| S-4 | 1 | 10"Ø | 24x24 | X | | | 4W / 300 | X | | X | | | X | | TITUS | TMSA-AA | HORIZONTAL DISCHARGE |
| S-5 | 2 | 8"Ø | 24x24 | X | | | 4W / 200-220 | X | | X | | | X | | TITUS | TMSA-AA | HORIZONTAL DISCHARGE |
| S-6 | 1 | 6"Ø | 24x24 | X | | | 3W / 100 | X | | X | | | X | | TITUS | TMSA-AA | HORIZONTAL DISCHARGE |
| S-7 | 2 | 6x6 | 11x11 | X | | | 2W / 100 | | X | X | | | X | | TITUS | TDC-AA | OPPOSED BLADE DAMPER |
| R-1 | 2 | 18x18 | 24x24 | | | X | NA / 800 | X | | | X | | X | | TITUS | 50F | BLACK FINISH |
| R-2 | 3 | 22x22 | 24x24 | | | X | NA / 100-900 | X | | | X | | X | | TITUS | 50FF | FULLY REMOVABLE FACE |
| E-1 | 3 | 10x10 | 12x12 | | X | | NA / 100-200 | | X | | | X | X | | TITUS | 50F | OPPOSED BLADE DAMPER |

NOTES:
1. SURFACE MOUNTED AIR DEVICES SHALL BE PROVIDED WITH OPPOSED BLADE DAMPERS. SEE ARCHITECTURAL DRAWINGS FOR CEILING TYPES.
2. S-1 & R-1 TO HAVE BLACK FINISH. ALL OTHER AIR DEVICES TO HAVE WHITE FINISH.
3. INSTALL SECTORIZING BAFFLE IN S-3 & S-6 TO PROVIDE 3 WAY AIR PATTERN INDICATED.

**AIR DEVICE SCHEDULE** | 3

FOR COMPLETE INFORMATION AND PRICING ON THE TRANE HVAC PACKAGE CONTACT MARTY CUSICK, THE YUM! BRANDS ACCOUNT EXECUTIVE AT TRANE NATIONAL ACCOUNTS
TOLL-FREE PHONE: (866) YUM-HVAC or (866) 986-4822
FAX: (502) 499-7870
EMAIL: mjcusick@trane.com

TRANE HAS AGREED TO SUPPLY AN HVAC PACKAGE CONSISTING OF THE ROOF-TOP UNITS, CURBS, THERMOSTATS AND REMOTE TEMPERATURE SENSORS. RTU'S AS SPECIFIED INCLUDE AN UNPOWERED CONVENIENCE OUTLET (SEE ELECTRICAL) AND AN HACR CIRCUIT BREAKER WHICH PROVIDES UNIT DISCONNECT. TRANE ALSO HAS AVAILABLE OPTION PACKAGES WHICH INCLUDE SMOKE DETECTORS AND ENUNCIATORS, ECONOMIZERS, AND RTU VARIATIONS SUCH AS HIGH-EFFICIENCY MODELS.

BE PREPARED AT TIME OF ORDER OR QUOTE REQUEST TO PROVIDE ALL PROJECT DETAILS REGARDING SPECIFICATIONS AND QUANTITIES AS SITE SPECIFIC DESIGN MAY NOT MATCH NATIONAL DESIGN.

SEE THE SCOPE OF WORK SHEETS FOR ADDITIONAL INFORMATION.

**TRANE PACKAGE INFORMATION** | 8

| ITEM | OA | RA | SA | EA | PRESSURE |
|---|---|---|---|---|---|
| EF-1 | -- | -- | -- | 1667 | -1667 |
| EF-2 | -- | -- | -- | 400 | -400 |
| EF-3 | -- | -- | -- | 350 | -350 |
| | | | | | |
| | | | | | |
| | | | | | |
| RTU-1 | 800 | 1600 | 2400 | -- | +800 |
| RTU-2 | 1700 | 1900 | 3600 | -- | +1700 |
| | | | | | |
| TOTAL | 2500 | | | 2417 | 83 |

**AIR BALANCE CFM SCHEDULE** | 4

APPROVED
City of San Jose, Building Division
❑ Building ❑ Plumbing/Mechanical
❑ Electrical ❑ Zoning
GARY VAN WEGEN (408) 277-8185
Plan No. _____ Date: _____

VMI architecture
Design · Planning · Interiors
637 5th Avenue San Rafael, CA 94901
415-451-2500 415-451-2595 fax
www.vmarch.com

VMI JOB NUMBER
Y1022

LICENSED ARCHITECT
HUGH EDWARD MURPHY
No. C17928
EXP. 10/31/11
STATE OF CALIFORNIA

RECORD DATES

| | |
|---|---|
| DD SUBMITTAL | 10-21-10 |
| BLDG. SUBMITTAL | 8-10-11 |
| BID SET | - |
| CONTRACT SET | - |

REVISIONS

2 08/24/11 PC Comments/ Plan Updates

CLIENT
TACO BELL CORP
1 GLEN BELL WAY, MD# 534
IRVINE, CA 92618
-
SITE #286119

PROJECT
TACO BELL
840 S. Bascom Avenue
San Jose, CA 95128-2605
APN #282-42-038

TY07_AUG09P

MECHANICAL SCHEDULES AND NOTES

M1.0

PERMIT FILE # CP10-060

Printed on Recycled Paper at American Draft Source

W:\Data\Yum_TBY\1022_San Jose_S Bascom_S286119\03_cd_current\102_1022_M2-0.dwg By: EALEXANDER Saved on: 8/22/2011 2:06:52 PM

ALL IDEAS, DESIGNS, ARRANGEMENTS AND PLANS INDICATED BY THIS DRAWING ARE OWNED BY, AND THE PROPERTY OF THIS OFFICE AND WERE CREATED, EVOLVED AND DEVELOPED FOR USE ON, AND IN CONNECTION WITH, THE SPECIFIED PROJECT. NONE OF SUCH IDEAS, DESIGNS, ARRANGEMENTS OR PLANS SHALL BE USED BY OR DISCLOSED TO ANY PERSON, FIRM OR CORPORATION FOR ANY PURPOSE WHATSOEVER WITHOUT THE WRITTEN PERMISSION OF PROJECT ARCHITECT.

WRITTEN DIMENSIONS ON THESE DRAWINGS SHALL HAVE PRECEDENCE OVER SCALE DIMENSIONS. CONTRACTORS SHALL VERIFY AND BE RESPONSIBLE FOR ALL DIMENSIONS AND CONDITIONS ON THE JOB AND THIS OFFICE MUST BE NOTIFIED OF ANY VARIATION FROM THE DIMENSIONS AND CONDITIONS SHOWN BY THESE DRAWINGS. SHOP DETAILS OF ADEQUATE SCALE MUST BE SUBMITTED TO THIS OFFICE FOR APPROVAL BEFORE PROCEEDING WITH FABRICATION ON ITEMS SO NOTED.

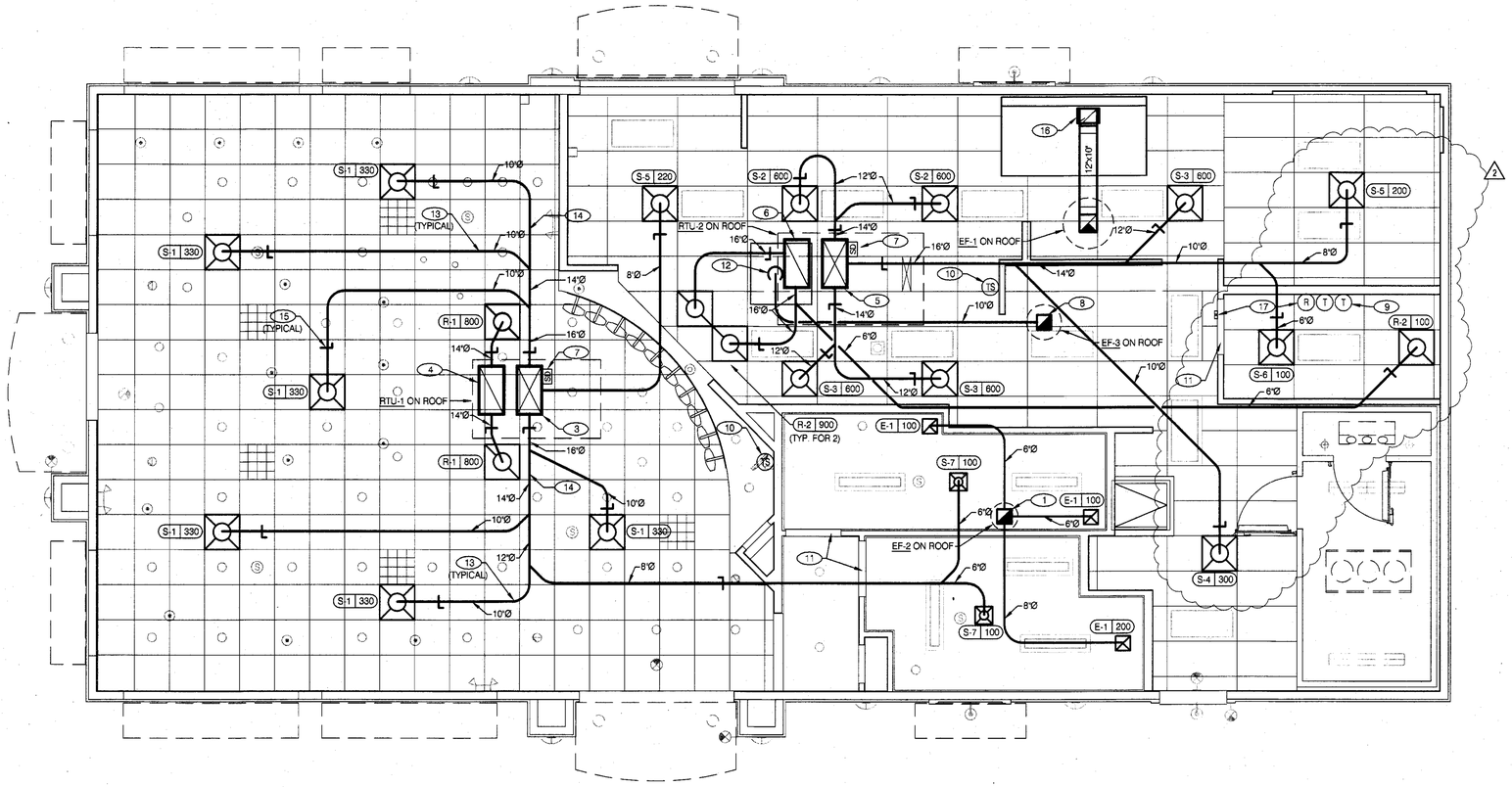


NOTE: REFER TO SHEET A3.0 (ROOF PLAN) FOR THE LOCATION OF THE ROOF EQUIPMENT.

REF. NORTH

12 11 10 9 8 7 6 5 4 3 2 1

**HVAC FLOOR PLAN** 1/4"= 1'-0" | A

**NOT USED** | F

**GENERAL NOTES** | E

1. DINING ROOM LIGHT FIXTURE LOCATIONS ARE CRITICAL. COORDINATE DUCTWORK AND AIR OUTLET LOCATIONS SO AS NOT TO CONFLICT WITH LIGHT FIXTURE LOCATIONS.
2. THERMOSTATS SHALL BE PROGRAMMABLE WITH SUBBASE FAN ON-AUTO AND REMOTE TEMPERATURE SENSOR (PROVIDED WITH TRANE PACKAGE).

**KEY NOTES** | B

1. 12x12 EXHAUST PLENUM UP TO EF-2 ON ROOF, 400 CFM.
2. SEE DETAIL 8 ON DRAWING M4.0 FOR SUPPLY AIR TAKE-OFF TO CEILING DIFFUSERS. RETURN OR EXHAUST AIR TAKE-OFFS SHALL BE SIMILAR.
3. 32x16 LINED SUPPLY PLENUM UP TO ROOFTOP UNIT RTU-1, 2400 CFM.
4. 32x16 LINED RETURN PLENUM UP TO ROOFTOP UNIT RTU-1, 1600 CFM.
5. 32x16 LINED SUPPLY PLENUM UP TO ROOFTOP UNIT RTU-2, 3600 CFM.
6. 32x16 LINED RETURN PLENUM UP TO ROOFTOP UNIT RTU-2, 1900 CFM.
7. FURNISH AND INSTALL SMOKE DETECTOR IN SUPPLY AIR PLENUM IN ACCORDANCE WITH LOCAL CODES. DUCT SMOKE DETECTOR WIRED BY ELECTRICAL CONTRACTOR, SEE SHEET ES.2.
8. 10"Ø EXHAUST DUCT UP TO EF-3 ON ROOF, 350 CFM.
9. LOCATE THERMOSTAT CONTROLS ON WALL IN OFFICE AT 48" A.F.F., COORDINATE LOCATION WITH LIGHT SWITCHES
10. MOUNT THERMOSTAT REMOTE SENSOR AT 60" ABOVE FINISHED FLOOR.
11. UNDERCUT INDICATED DOORS 3/4" FOR MAKEUP AIR.
12. CONNECT 10"Ø EXHAUST DUCT TO VAPOR HOOD.
13. DUCTS TO RUN THROUGH OPEN WEBBING OF TRUSSES. COORDINATE OPENING SIZES REQUIRED FOR PASSAGE OF DUCTWORK WITH TRUSS MANUFACTURER.
14. SUPPLY DUCTWORK RUN IN TRUSS SPACE BETWEEN TRUSSES.
15. VOLUME DAMPER, TYPICAL.
16. 12x10 EXHAUST AIR DUCT DOWN TO 15x10 EXHAUST CONNECTION AT HOOD. 12x10 EXHAUST DUCT SHALL RUN BETWEEN ROOF TRUSSES TO CONNECT TO HOOD EXHAUST FAN EF-1 ON ROOF. SEE HOOD DETAILS ON DRAWING M3.0. SEE DETAIL 15 ON SHEET M4.0 FOR FIRE PROTECTION OF DUCT WORK. SEE DETAIL 5 ON SHEET M4.0 FOR EXHAUST DUCT TRANSITION.
17. INSTALL REMOTE RESETS FOR SMOKE DETECTORS AT RTU-1 & RTU-2 ON WALL NEXT TO THERMOSTATS @48" A.F.F. ALONG WITH THEIR INDICATOR LIGHTS WHICH ARE TO BE MOUNTED ON WALL OVER OFFICE DOOR FACING KITCHEN. SMOKE DETECTOR RESET SWITCH WITH KEY. MFR. IS "SYSTEM SENSOR" MODEL #RT5151 KEY. INSTALL PER MFR. SPECIFICATIONS.

**APPROVED**
City of San Jose, Building Division
❑ Building ❑ Plumbing/Mechanical
❑ Electrical ❑ Zoning
GARY VAN WEGEN (408)277-8185
Plan No. _____ Date: _____

VMI architecture
Design · Planning · Interiors
637 5th Avenue San Rafael, CA 94901
415-451-2500 415-451-2595 fax
www.vmarch.com

VMI JOB NUMBER
Y1022

LICENSED ARCHITECT
HUGH EDWARD MURPHY
No. C17926
REN. 10/31/11
STATE OF CALIFORNIA

RECORD DATES

| | |
|---|---|
| DD SUBMITTAL | 10-21-10 |
| BLDG. SUBMITTAL | 6-10-11 |
| BID SET | - |
| CONTRACT SET | - |

REVISIONS

2 08/24/11 PC Comments/ Plan Updates

CLIENT
TACO BELL CORP
1 GLEN BELL WAY, MD# 534
IRVINE, CA 92618

SITE #286119

PROJECT
TACO BELL
840 S. Bascom Avenue
San Jose, CA 95128-2605
APN #282-42-038

TY07_AUG09P

HVAC FLOOR PLAN

M2.0

PERMIT FILE # CP10-060

Printed on Recycled Paper at American Draft Source

W:\Data\Yum_TBLY1022_San Jose_S Bascom_S28611903_cd_current\103_1022_M2-1.dwg By: EALEXANDER Saved on: 8/22/2011 10:26:47 AM

ALL IDEAS, DESIGNS, ARRANGEMENTS AND PLANS INDICATED BY THIS DRAWING ARE OWNED BY, AND THE PROPERTY OF, THIS OFFICE AND WERE CREATED, EVOLVED AND DEVELOPED FOR USE ON, AND IN CONNECTION WITH, THE SPECIFIED PROJECT. NONE OF SUCH IDEAS, DESIGNS, ARRANGEMENTS OR PLANS SHALL BE USED BY OR DISCLOSED TO ANY PERSON, FIRM OR CORPORATION FOR ANY PURPOSE WHATSOEVER WITHOUT THE WRITTEN PERMISSION OF PROJECT ARCHITECT.

WRITTEN DIMENSIONS ON THESE DRAWINGS SHALL HAVE PRECEDENCE OVER SCALE DIMENSIONS. CONTRACTORS SHALL VERIFY AND BE RESPONSIBLE FOR ALL DIMENSIONS AND CONDITIONS ON THE JOB AND THIS OFFICE MUST BE NOTIFIED OF ANY VARIATION FROM THE DIMENSIONS AND CONDITIONS SHOWN BY THESE DRAWINGS. SHOP DETAILS OF ADEQUATE SCALE MUST BE SUBMITTED TO THIS OFFICE FOR APPROVAL BEFORE PROCEEDING WITH FABRICATION ON ITEMS SO NOTED.

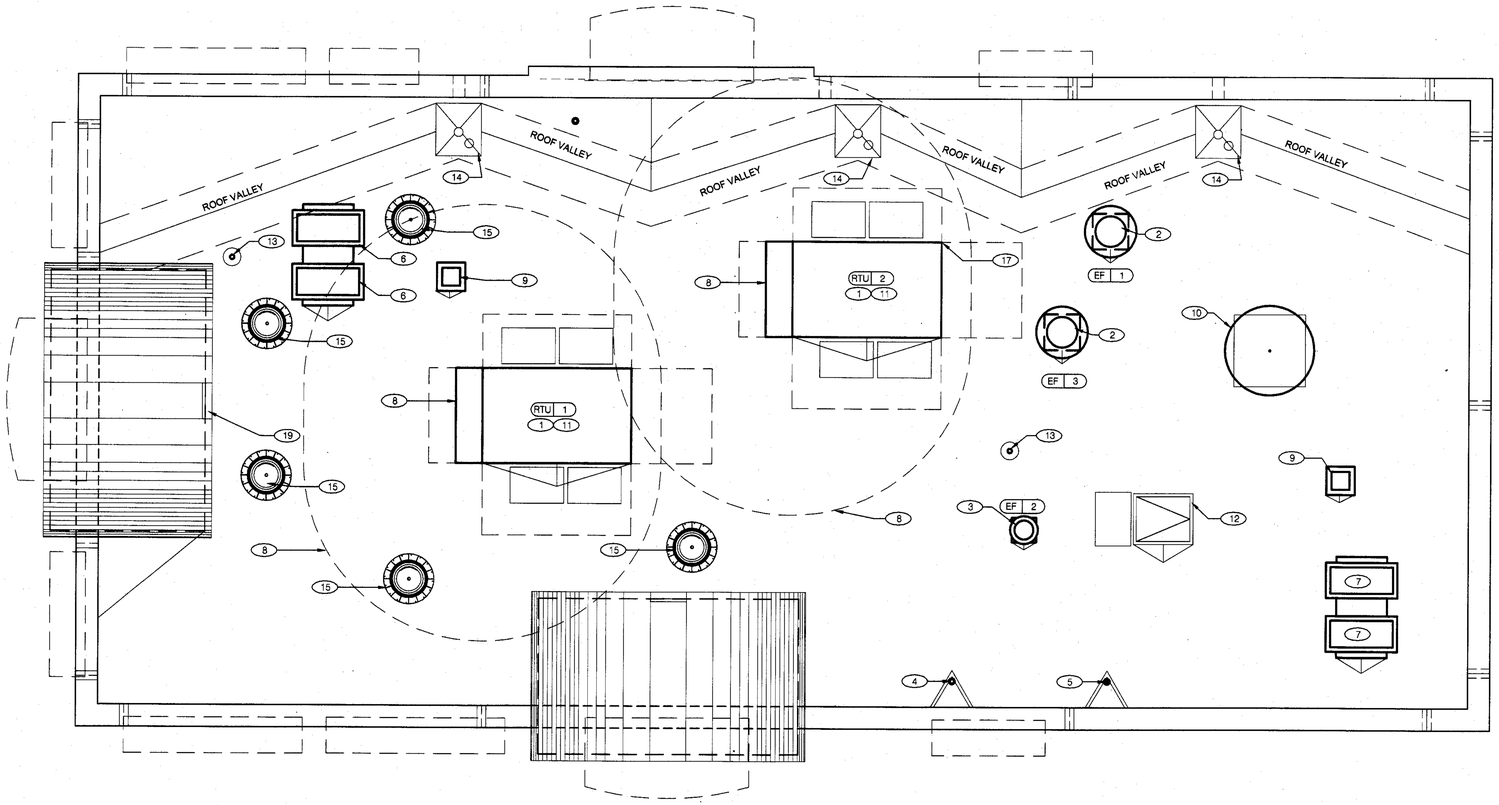


REF. NORTH

12 11 10 9 8 7 6 5 4 3 2 1

## MECHANICAL ROOF PLAN 1/4"=1'-0" A

## NOT USED F

## NOT USED E

## ROOF PLAN NOTES D

WATERPROOFING:
A. TOP NAILING AT PARAPET CAP FLASHING WILL NOT BE ACCEPTED.
B. PENETRATIONS IN ROOFING MEMBRANE AND FLASHING SHALL ONLY BE MADE AS INDICATED ON THE DRAWINGS OR SPECS. SEE SPECIFICATIONS FOR SEALANT SPECS.
C. ALL SHEET MTL FLASHING SHALL BE 22 GA MIN.

MISCELLANEOUS:
A. ROOF PENETRATIONS CLOSER THAN 12' FROM ANOTHER WILL NOT BE ALLOWED.
B. EXHAUST FANS MIN. 10'-0" AWAY FROM ALL AIR INTAKE / SUPPLY.

ROOF INSULATION:
A. R-30 BATT INSULATION, TYPE 1. REFER TO SPECIFICATION SECTION 07210.

ROOFING SYSTEM:
A. SINGLE-PLY SYSTEM. REFER TO SPECIFICATIONS SECTION 07523.
B. G.C. SHALL COORDINATE ALL INSTALLATION REQUIREMENTS.

ALTERNATE ROOFING SYSTEM:
A. REFER TO SPECIFICATION SECTIONS 07550 and 07555.
B. G.C. SHALL COORDINATE ALL INSTALLATION REQUIREMENTS.

ROOF CRICKETS:
A. CRICKETS @ ROOFTOP EQUIPMENT SHALL BE FORMED WITH TAPERED INSULATION TO SUCH AN EXTENT AS TO PROVIDE A POSITIVE MIN. 1/2" SLOPE TO THE VALLEY.

CRITICAL FINISH OPENINGS:
A. BUILDING FINISH OPENINGS THAT ARE DESIGNATED AS "CRITICAL" SHALL BE MAINTAINED TO PROVIDE FOR THE STANDARD INSTALLATION OF STANDARD SIGNAGE / BUILDING ELEMENTS. VERIFY DIMENSIONS WITH SIGN VENDOR.

## KEY NOTES B

1. HVAC UNIT. INSTALL PLUMB AND LEVEL.
2. EXHAUST FAN. SEE SHEETS M3.0 & M3.1 AND DETAILS 18, 19 / A6.0.
3. RESTROOM EXHAUST FAN. SEE DETAIL 2 / M4.0.
4. 3"Ø WATER HEATER EXHAUST FLUE. MAINTAIN A MINIMUM OF 10'-0" FROM THE NEAREST POINT OF AIR INTAKE. SEE DETAIL 13 / A6.0 FOR BRACING DETAIL; SEE DETAIL 2 / P6.0 FOR FLUE TERMINATION HEIGHT.
5. 3"Ø WATER HEATER COMBUSTION AIR INTAKE. SEE DETAIL 13 / A6.0 FOR BRACING DETAIL; SEE DETAIL 2 / P6.0 FOR INTAKE TERMINATION HEIGHT.
6. ICE MACHINE CONDENSERS.
7. WALK-IN COOLER / FREEZER CONDENSERS. SEE SCOPE OF WORK.
8. OUTSIDE AIR INTAKE FOR HVAC UNIT. MAINTAIN MIN 10'-0" SEPARATION FROM PLUMBING VENTS, FLUES AND BUILDING EXHAUST.
9. PIPE HOOD FOR UTILITIES, SEE DETAIL 9 / A6.0.
10. SATELLITE DISH. SEE DTL. 6/A8.3 FOR SUPPORT AND FLASHING ASSEMBLY AND SHEET S3.0 (ROOF FRAMING PLAN) FOR SUPPORT LOCATION.
11. POWER/GAS/CONDENSATE ENTRY UNDER HVAC UNIT (PER HVAC MFR. SPECS.) REFER TO MECH. AND PLUMB. DWGS. UTILITY ACCESS FROM WITHIN CURB-NO ROOF PENETRATIONS. DO NOT RUN ON ROOF SURFACE. SEE 13 / P6.0.
12. ROOF ACCESS HATCH. SEE DTL. 16/A6.0
13. WASTE VENT THRU ROOF. SEE DETAIL 12 / A6.0.
14. ROOF & OVERFLOW DRAIN. SEE DETAIL 18/A6.1.
15. SOLATUBE SKYLIGHTS.

**APPROVED**
City of San Jose, Building Division
❑ Building ❑ Plumbing/Mechanical
❑ Electrical ❑ Zoning
GARY VAN WEGEN (408) 277-8185
Plan No. _____ Date: _____

Printed on Recycled Paper at American Draft Source

VMI architecture
Design · Planning · Interiors
637 5th Avenue San Rafael, CA 94901
415-451-2500 415-451-2595 fax
www.vmarch.com

VMI JOB NUMBER
Y1022

LICENSED ARCHITECT
HUGH EDWARD MURPHY
No. C17896
Exp. 10/31/11
STATE OF CALIFORNIA

RECORD DATES

| | |
|---|---|
| DD SUBMITTAL | 10-21-10 |
| BLDG. SUBMITTAL | 6-10-11 |
| BID SET | - |
| CONTRACT SET | - |

REVISIONS

CLIENT
TACO BELL CORP
1 GLEN BELL WAY, MD# 534
IRVINE, CA 92618

SITE #286119

PROJECT
TACO BELL
840 S. Bascom Avenue
San Jose, CA 95128-2605
APN #282-42-038

TY07_AUG09P

MECHANICAL ROOF PLAN

M2.1

PERMIT FILE # CP10-060

W:\Data\Yum_TB\Y1022_San Jose_S Bascom_S286119\03_cd_current\104_1022_M3-0.dwg By: EALEXANDER Saved on: 8/22/2011 10:32:18 AM
ALL IDEAS, DESIGNS, ARRANGEMENTS AND PLANS INDICATED BY THIS DRAWING ARE OWNED BY, AND THE PROPERTY OF THIS OFFICE AND WERE CREATED, EVOLVED AND DEVELOPED FOR USE ON, AND IN CONNECTION WITH, THE SPECIFIED PROJECT. NONE OF SUCH IDEAS, DESIGNS, ARRANGEMENTS OR PLANS SHALL BE USED BY OR DISCLOSED TO ANY PERSON, FIRM OR CORPORATION FOR ANY PURPOSE WHATSOEVER WITHOUT THE WRITTEN PERMISSION OF PROJECT ARCHITECT.
WRITTEN DIMENSIONS ON THESE DRAWINGS SHALL HAVE PRECEDENCE OVER SCALE DIMENSIONS. CONTRACTORS SHALL VERIFY AND BE RESPONSIBLE FOR, ALL DIMENSIONS AND CONDITIONS ON THE JOB AND THIS OFFICE MUST BE NOTIFIED OF ANY VARIATION FROM THE DIMENSIONS AND CONDITIONS SHOWN BY THESE DRAWINGS. SHOP DETAILS OF ADEQUATE SCALE MUST BE SUBMITTED TO THIS OFFICE FOR APPROVAL BEFORE PROCEEDING WITH FABRICATION ON ITEMS SO NOTED.

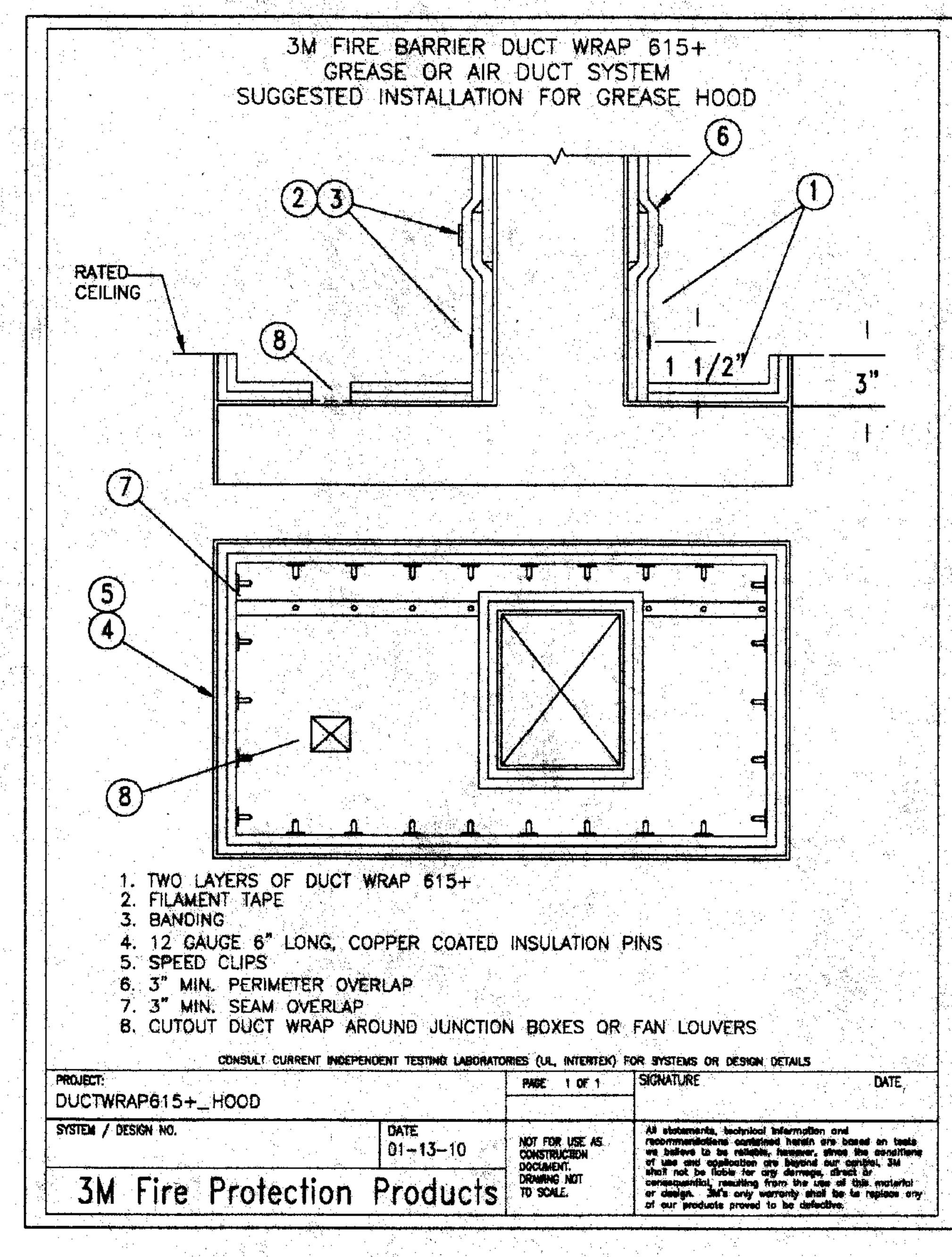


**3M FIRE PROTECTION** N.T.S. | 14

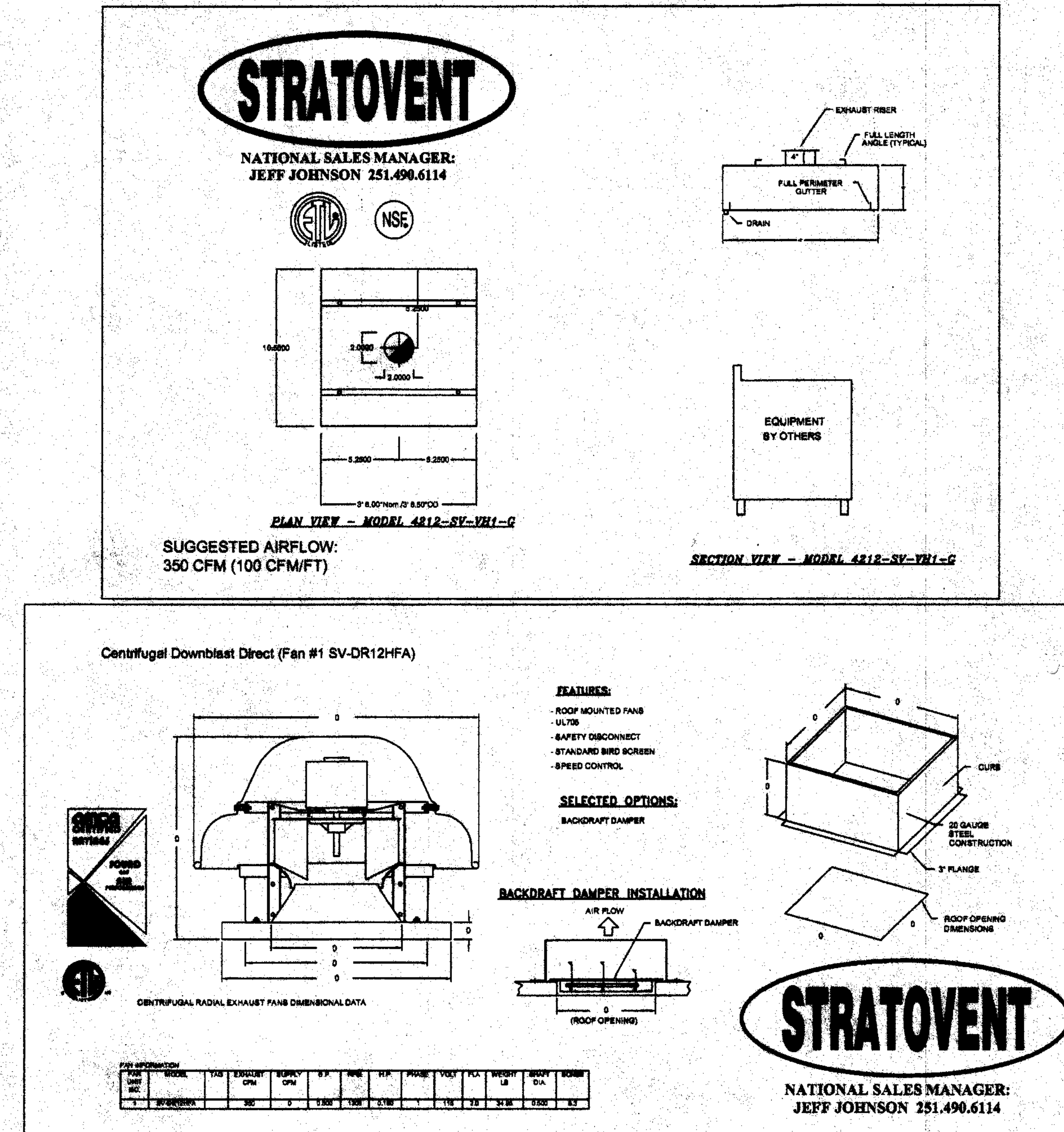


**TYPE II HOOD SPECIFICATIONS** N.T.S. | 10

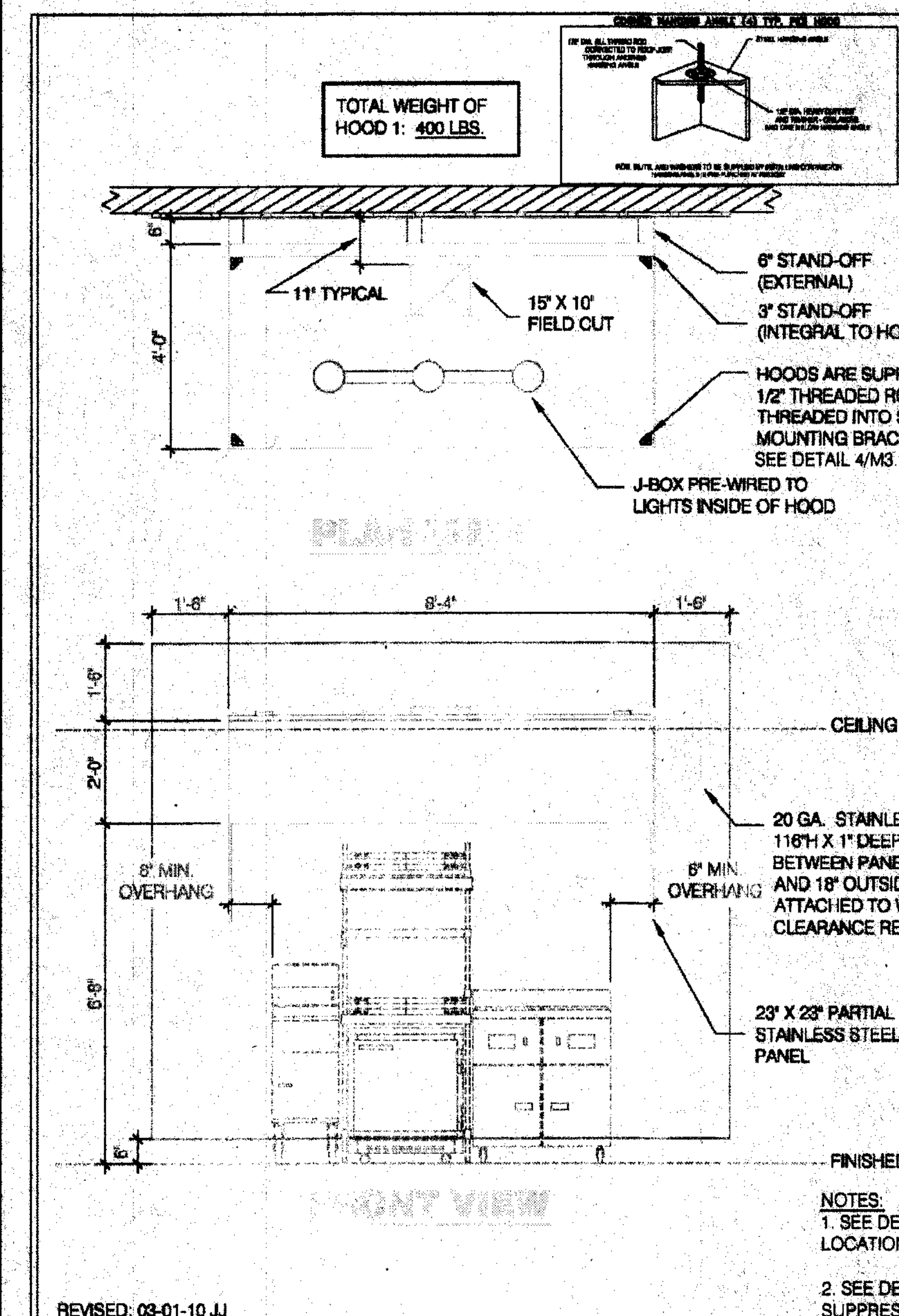


| HOOD # | 1 OF 1 | MODEL # | STRATOVENT SVND2 |
|---|---|---|---|
| LENGTH (IN): 8' 4" | WIDTH (IN): 48" | HEIGHT (IN): | 24" |
| EXHAUST CFM: | 1667 | SUPPLY CFM: | FROM RTU |
| EXHAUST SP: | 1.25 | SUPPLY SP: | NA |
| EXHAUST FPM: | 1600 | SUPPLY FPM: | NA |
| EXH. SIZE: | 15" X 10" | SUP SIZE: | NA |
| FILTERS: (0) | 16" X 16" | FILTERS: (5) | 16" X 20" |
| FIRE SUPPRESSION: | ANSUL-R102 | FILTER TYPE: | ALUMINUM |
| LIGHT QTY: (3) | INCANDESCENT | CONTROL SWITCH: | SEE PLANS |

DESIGN NOTES:

1. ALL EXPOSED SURFACES TO BE STAINLESS STEEL, 20 GA MINIMUM PER NFPA-96.
2. HOOD IS PREPIPED FOR ANSUL R-102.
3. STAINLESS STEEL WALL PANEL TO BE PROVIDED BY HOOD MANUFACTURER.

HOOD LISTING INFORMATION:

BRAND: STRATOVENT
MODEL: SVND2
TEMP: 450F MAX.
MIN. AIRFLOW: 150 CFM/LINEAR FT (open ends)

MIN. AIRFLOW: 105 CFM/LINEAR FT (closed ends or min. 23" x 23" end panels)

DESIGN CALCS: 200 CFM/LINEAR FT
200 X 8.33 = 1667 CFM

ETL-LISTED FILE#3054804-001
UL-710 STANDARD.

NSF/ANSI STANDARD 2

(UL-710 Standard) Intertek (NSF/ANSI Standard 2) NFPA

NOTES:
1. SEE DETAIL1/M3.1 FOR HEAT SENSOR LOCATION.
2. SEE DETAILS 1 & 2/M3.1 FOR FIRE SUPPRESSION SYSTEM.

STRATOVENT
RALEIGH, NC - REDDING, CA
CONTACT: JEFF JOHNSON
PH: 251-490-6114, Fax: 919-573-4261

**TACO BELL TYPE I HOOD DETAIL** 3/8" = 1'-0" | 2

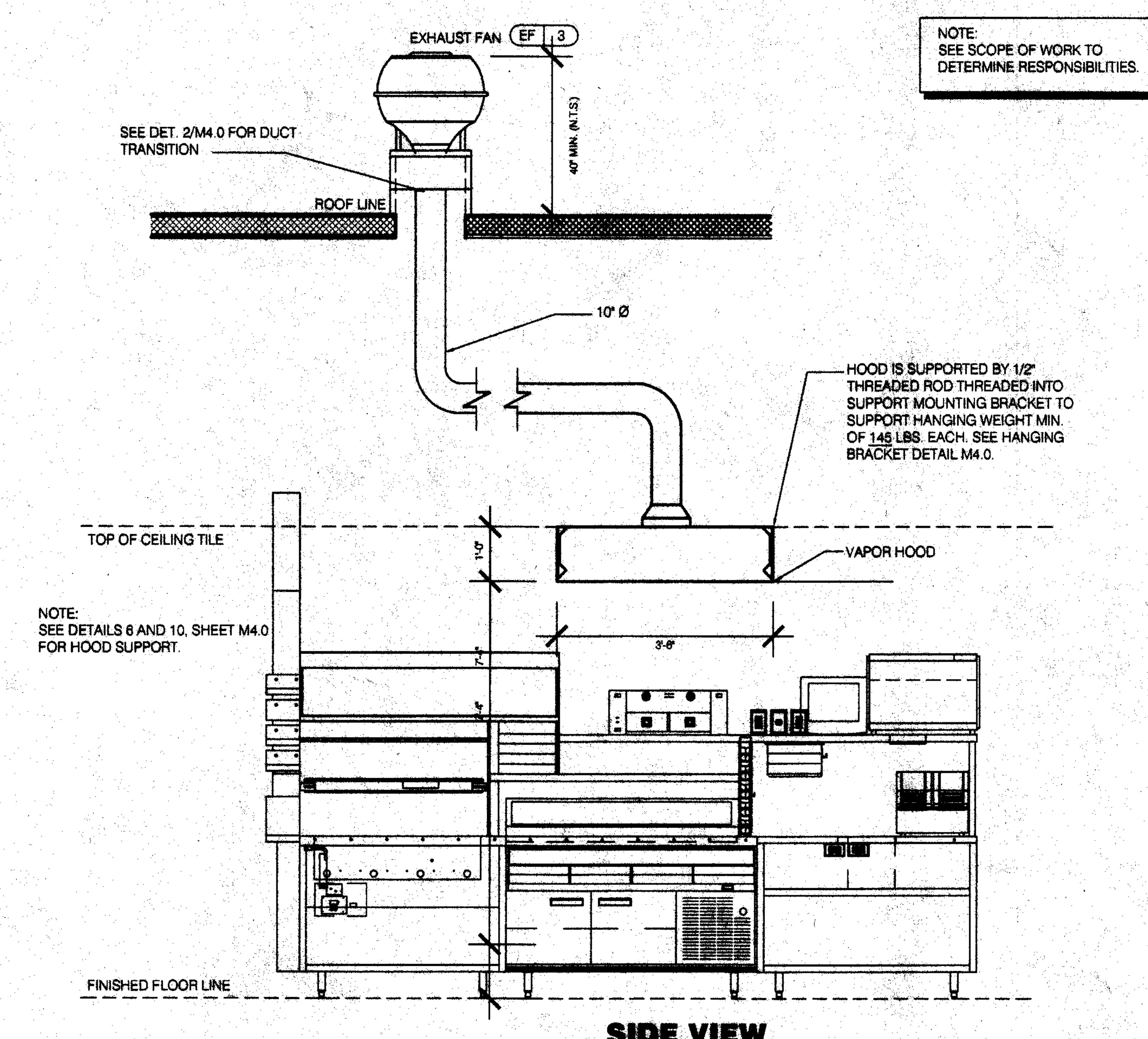


NOTE:
SEE SCOPE OF WORK TO DETERMINE RESPONSIBILITIES.

**TYPE II HOOD SECTION** N.T.S. | 16

## GENERAL NOTES

1. Exhaust duct collars may be field cut.
2. Exhaust duct air flow velocity shall be greater than 1500 FPM, lower if allowed by local codes.
3. Exhaust air flows must be balanced upon installation.
4. Fan operating speed should be rechecked after 60 days to ensure proper performance. Static pressure values are given for the hood only (unless otherwise noted).

## SPECIFICATIONS

1. Hoods shall be constructed of minimum 20 gauge stainless steel per NFPA with # 3 polish. All unexposed surfaces shall be constructed of minimum 18 gauge aluminized steel.
2. UL classified aluminum or stainless steel baffle-type filters shall be easily removed for cleaning. Filter housing shall terminate in a pitched grease trough that drains into a removable stainless steel grease cup.
3. UL listed and NSF approved vapor proof incandescent light fixtures pre-wired to junction box at top of hood in accordance with NEC 70.
4. Pre-piped fire suppression systems shall be located on the top of the hood and provided with the hood or by a certified technician. Final location of all nozzles and fire suppression drops to be locally approved
5. and inspected.

Hood(s) shall be fabricated in accordance with NFPA Bulletin #96 and shall bear the NSF Seal or equivalent sanitation mark. Hoods shall be listed under UL 710, EXHAUST HOODS FOR COMMERCIAL COOKING EQUIPMENT. Stratovent-brand hoods are Certified to UL 710 by ETL under FILE# 3054804-001.

(UL-710 Standard) Intertek (NSF/ANSI Standard 2) NFPA

THIS HOOD DESIGN IS BASED UPON
STRATOVENT, MODEL SVND2. MANUFACTURED BY:

STRATOVENT VENTILATION HOODS
RALEIGH, NC 27616
CONTACT: JEFF JOHNSON, 251-490-6114

**TYPE 1 HOOD NOTES & SPEC'S.** | 12

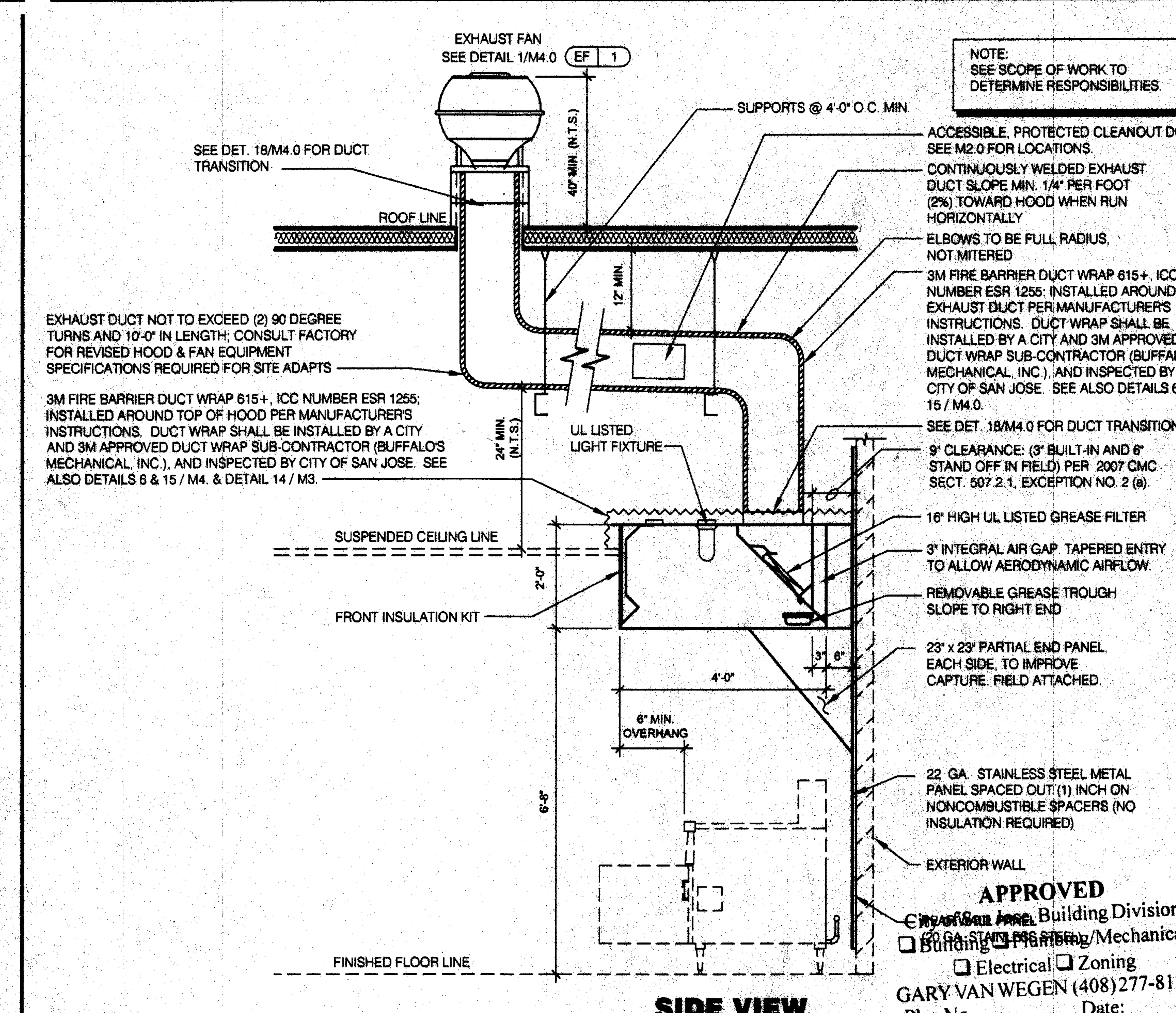


NOTE:
SEE SCOPE OF WORK TO DETERMINE RESPONSIBILITIES.

APPROVED
City of San Jose, Building Division
☐ Building ☐ Plumbing/Mechanical
☐ Electrical ☐ Zoning
GARY VAN WEGEN (408)277-8185
Plan No. ________ Date: ______

**TACO BELL TYPE I HOOD SECTION** 1/2" = 1'-0" | 4

VMI architecture
Design · Planning · Interiors
637 5th Avenue San Rafael, CA 94901
415-451-2500 415-451-2595 fax
www.vmarch.com

VMI JOB NUMBER
Y1022

LICENSED ARCHITECT
HUGH EDWARD MURPHY
No. C17928
REN. 10/31/11
STATE OF CALIFORNIA

RECORD DATES

| | |
|---|---|
| DD SUBMITTAL | 10-21-10 |
| BLDG. SUBMITTAL | 6-10-11 |
| BID SET | - |
| CONTRACT SET | - |

REVISIONS

CLIENT
TACO BELL CORP
1 GLEN BELL WAY, MD# 534
IRVINE, CA 92618

SITE #286119

PROJECT
TACO BELL
840 S. Bascom Avenue
San Jose, CA 95128-2605
APN #282-42-038

TY07_AUG09P

HOOD EXHAUST PLANS AND SECTIONS

# M3.0

PERMIT FILE # CP10-060

Printed on Recycled Paper at American Draft Source

W:\Data\Yum_TBW\1022_San Jose_S Bascom_S286119\03_cd_current\196_1022_M3-1.dwg By: EALEXANDER Saved on: 8/22/2011 10:34:30 AM
ALL IDEAS, DESIGNS, ARRANGEMENTS AND PLANS INDICATED BY THIS DRAWING ARE OWNED BY, AND THE PROPERTY OF THIS OFFICE AND WERE CONCEIVED, LOVEVED AND DEVELOPED FOR USE ON, AND IN CONNECTION WITH, THE SPECIFIED PROJECT. NONE OF SUCH IDEAS, DESIGNS, ARRANGEMENTS OR PLANS SHALL BE USED BY OR DISCLOSED TO ANY PERSON, FIRM OR CORPORATION FOR ANY PURPOSE WHATSOEVER WITHOUT THE WRITTEN PERMISSION OF PROJECT ARCHITECT.
WRITTEN DIMENSIONS ON THESE DRAWINGS SHALL HAVE PRECEDENCE OVER SCALE DIMENSIONS. CONTRACTORS SHALL VERIFY AND BE RESPONSIBLE FOR ALL DIMENSIONS AND CONDITIONS ON THE JOB AND THIS OFFICE MUST BE NOTIFIED OF ANY VARIATION FROM THE DIMENSIONS AND CONDITIONS SHOWN BY THESE DRAWINGS. SHOP DETAILS OF ADEQUATE SCALE MUST BE SUBMITTED TO THIS OFFICE FOR APPROVAL BEFORE PROCEEDING WITH FABRICATION ON ITEMS SO NOTED.

**NOT USED** | 17

**NOT USED** | 18

**NOT USED** | 19

**NOT USED** | 20

CITY OF SAN JOSE
CAPITAL OF SILICON VALLEY

*Department of Planning, Building and Code Enforcement*

Project Title: TACO BELL
Project Address: 840 S. BASCOM AVE.
Plan Check #: 018000 CI

**SPECIAL INSPECTION FOR FIELD APPLIED GREASE DUCT PRODUCTS**

To applicants of projects requiring Special Inspection or Testing per section 507.2.3 of the 2007 California Mechanical code.

BEFORE A PERMIT CAN BE ISSUED: The owner or his representative, on the advice of the responsible Project Engineer or Architect, shall complete with wet signatures and submit to this Division for review and approval.

The Owner, Special Inspector, and general contractor, where applicable, shall complete with wet signatures and submit to this Division for review and approval.

1. Submit for approval two sets of detailed drawings of all Type I hoods and ductwork as to be installed in the field. Show all clean-outs and details of support and seismic bracing. Field-applied grease duct enclosure information and installation details per ICC standards to be submitted with the plans. Include roof layout and ceiling details.
2. Field-applied grease duct enclosure installing contractor is responsible for proper notification to the Special Inspection agency for items listed.
3. Copies of all inspections are to be sent directly to this Division by the Inspection Agency and a copy to be on the job site plans.
4. Special Inspection agency and field-applied grease duct enclosure installers to submit names and qualifications of onsite Special Inspectors/Installers to this Division for approval.
5. The Special Inspector is responsible to the Chief Building Official for immediate notification of any concerns and/or problems encountered.
6. It is the responsibility of the installing contractor to review the Building Division approved plans for additional inspection or testing requirements that may be noted.
7. Special Inspector shall use only Building Division approved drawings and manufacturer's installation instructions.
8. BEFORE CLOSE OF CEILING: The Inspection Agency shall submit a statement that all items requiring inspection were fulfilled and reported. Those items not inspected shall be noted in this statement. Copy of statement to be maintained at the job site for Building Inspector's review prior to final inspections.
   - A. Ductwork is to be inspected before installation of field-applied grease duct enclosure (protection product) by a City of San Jose Mechanical inspector.
   - B. Special Inspector is required to be present on the job for continuous inspection of the fire wrap protection installation.
   - C. Upon completion of the installation of the field-applied grease duct enclosure, an inspection by the City of San Jose Mechanical Inspector will be required before the closing of the ceiling.

Name of field-applied grease duct enclosure product: 3M Fire ICC#: ESR 1255

ACKNOWLEDGEMENT:
Owner: Print: E. PAUL TERAPANI JR. Sign: [signature] Date: 6/7/11
Certified special Inspector / City of San Jose Inspector. Note: sign below if a special inspector performs the inspections
Print: JM CONSULTING ENGINEERS (510) 685-0181 Sign: [signature] Date:
Certified Installer: F. Rodgina Ins. Print: Arnel Felicardo Sign: [signature] Date:
Project Engineer/Architect: Print: HUGH MURPHY Sign: [signature] Date:
Approved by Chief Building Official: Print: Sign: Date:

**SPECIAL INSPECTION FORM** | 11

**NOT USED** | 16

**NOT USED** | 12

Job Name: TACO BELL
Drawn by:
System Size: ANSUL-3.0 Gallon Total Flow Points: 6
Hood # 1 8'-4" Long x 48" Wide x 24" High
Riser # 1 Size: 10W" x 15L"

NOTES
- FIELD PIPE DROPS AS SHOWN SLEEVING, ELBOWS, TEES, AND NOZZLES SUPPLIED BY STRATO-VENT
- RELOCATE NOZZLES IF FLOW PATTERN IS BLOCKED BY SHELVING, SALAMANDERS, ETC.
- MAXIMUM 9 ELBOWS IN SUPPLY LINE
- MINIMUM 72 INCHES OF AGENT LINE FROM TANK TO FIRST NOZZLE
- IF APPLICABLE, PRE-PIPED CHARBROILER DROPS ARE SHIPPED LOOSE
- FACTORY PIPING EXTENDS A MAXIMUM OF 6" ABOVE THE TOP OF THE HOOD. - APPLIANCE DIMENSIONS LISTED REPRESENT THE COOKING SURFACE SIZE. NOT THE OVERALL APPLIANCE SIZE.
- THIS FIRE SYSTEM COMPLIES WITH U L 300 REQUIREMENTS

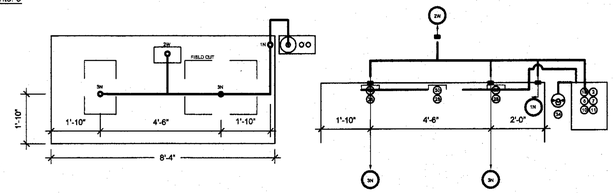


FACTORY PIPING
FIELD PIPING

**TACO BELL HOOD FIRE SUPPRESSION SYSTEM PLAN** 3/8" = 1'-0" | 1

| ITEM | QTY | DESCRIPTION | PART NO. | FLOW PTS. | ITEM | QTY | DESCRIPTION | PART NO. | FLOW PTS. |
|---|---|---|---|---|---|---|---|---|---|
| 1A | | 1.5 GALLON TANK | | | 1F | | NOZZLE ASSEMBLY | 419333 | |
| 1B | | 3 GALLON TANK | | | 1N | | NOZZLE ASSEMBLY | 419335 | |
| 2 | | OEM AUTOMAN RELEASE | | | 1/2N | | NOZZLE ASSEMBLY | 419334 | |
| 3 | | OEM REGULATED RELEASE | | | 3N | | NOZZLE ASSEMBLY | 419338 | |
| 4 | | OEM REGULATED ACTUATOR | | | 245 | | NOZZLE ASSEMBLY | 419340 | |
| 5 | | ANSULEX LIQUID AGENT (3 GAL.) | | | 230 | | NOZZLE ASSEMBLY | 419339 | |
| 6 | | ANSULEX LIQUID AGENT (1.5 GAL.) | | | 2120 | | NOZZLE ASSEMBLY | 419343 | |
| 7 | | CARTRIDGE | 101-20 | | 290 | | NOZZLE ASSEMBLY | 419342 | |
| 8 | | CARTRIDGE | 101-10 | | 260 | | NOZZLE ASSEMBLY | 419341 | |
| 9 | | CARTRIDGE | 101-30 | | 28 | | DETECTOR BRACKET | | |
| 9A | | CARTRIDGE | LT-A-101-30 | | 29 | | LOW TEMP FUSIBLE LINK | | |
| 9B | | DOUBLE TANK CARTRIDGE | | | 30 | | HIGH TEMP FUSIBLE LINK | | |
| 10 | | TEST LINK | | | MVG | | MECHANICAL GAS VALVE | | |
| 11 | | DOUBLE MICROSWITCH | | | EGV | | ELECTRICAL GAS VALVE | | |
| 12 | | HOSE ASSEMBLY | | | 34 | | REMOTE MANUAL PULL STATION | | |
| 1100 | | DUCT NOZZLE | 430913 | | S | | SWIVEL ADAPTOR | | |
| 2W | | DUCT NOZZLE | 419337 | | | | | | |
| 1W | | NOZZLE ASSEMBLY | 419336 | | | | | | |

**TACO BELL HOOD FIRE SUPRESSION SCHEDULE** N.T.S. | 2

**NOT USED** | 7

**NOT USED** | 8

**NOT USED** | 12

**NOT USED** | 3

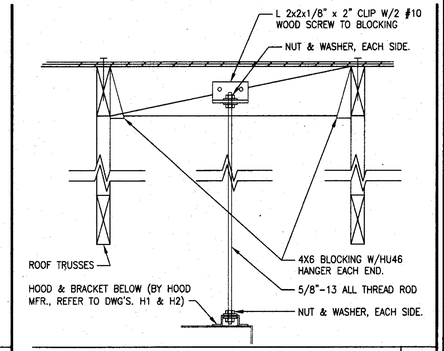


**HOOD SUPPORT DETAIL** N.T.S. | 4

APPROVED
City of San Jose, Building Division
❑ Building ❑ Plumbing/Mechanical
❑ Electrical ❑ Zoning
GARY VAN WEGEN (408) 277-8185
Plan No. _____ Date: _____

VMI architecture
Design · Planning · Interiors
637 5th Avenue San Rafael, CA 94901
415-451-2500 415-451-2595 fax
www.vmarch.com

VMI JOB NUMBER
Y1022

LICENSED ARCHITECT HUGH EDWARD MURPHY No. C17928 Exp. 10/31/11 STATE OF CALIFORNIA

RECORD DATES

| | |
|---|---|
| DD SUBMITTAL | 10-21-10 |
| BLDG. SUBMITTAL | 5-10-11 |
| BID SET | - |
| CONTRACT SET | - |

REVISIONS

CLIENT
TACO BELL CORP
1 GLEN BELL WAY, MD# 534
IRVINE, CA 92618

SITE #286119

PROJECT
TACO BELL
840 S. Bascom Avenue
San Jose, CA 95128-2605
APN #282-42-038

TY07_AUG09P

HOOD FIRE SUPRESSION DETAILS

M3.1

PERMIT FILE # CP10-060

Printed on Recycled Paper at American Draft Source

W:\Data\Yum_TB\Y1022_San Jose_S Bascom_S286119\03_cd_current\108_1022_M4-0.dwg By: EALEXANDER Saved on: 8/22/2011 10:50:01 AM

ALL IDEAS, DESIGNS, ARRANGEMENTS AND PLANS INDICATED BY THIS DRAWING ARE OWNED BY, AND THE PROPERTY OF THIS OFFICE AND WERE CREATED, EVOLVED AND DEVELOPED FOR USE ON, AND IN CONNECTION WITH, THE SPECIFIED PROJECT. NONE OF SUCH IDEAS, DESIGNS, ARRANGEMENTS OR PLANS SHALL BE USED BY OR DISCLOSED TO ANY PERSON, FIRM OR CORPORATION FOR ANY PURPOSE WHATSOEVER WITHOUT THE WRITTEN PERMISSION OF PROJECT ARCHITECT. WRITTEN DIMENSIONS ON THESE DRAWINGS SHALL HAVE PRECEDENCE OVER SCALE DIMENSIONS: CONTRACTORS SHALL VERIFY AND BE RESPONSIBLE FOR, ALL DIMENSIONS AND CONDITIONS ON THE JOB AND THIS OFFICE MUST BE NOTIFIED OF ANY VARIATION FROM THE DIMENSIONS AND CONDITIONS SHOWN BY THESE DRAWINGS. SHOP DETAILS OF ADEQUATE SCALE MUST BE SUBMITTED TO THIS OFFICE FOR APPROVAL BEFORE PROCEEDING WITH FABRICATION ON ITEMS SO NOTED.

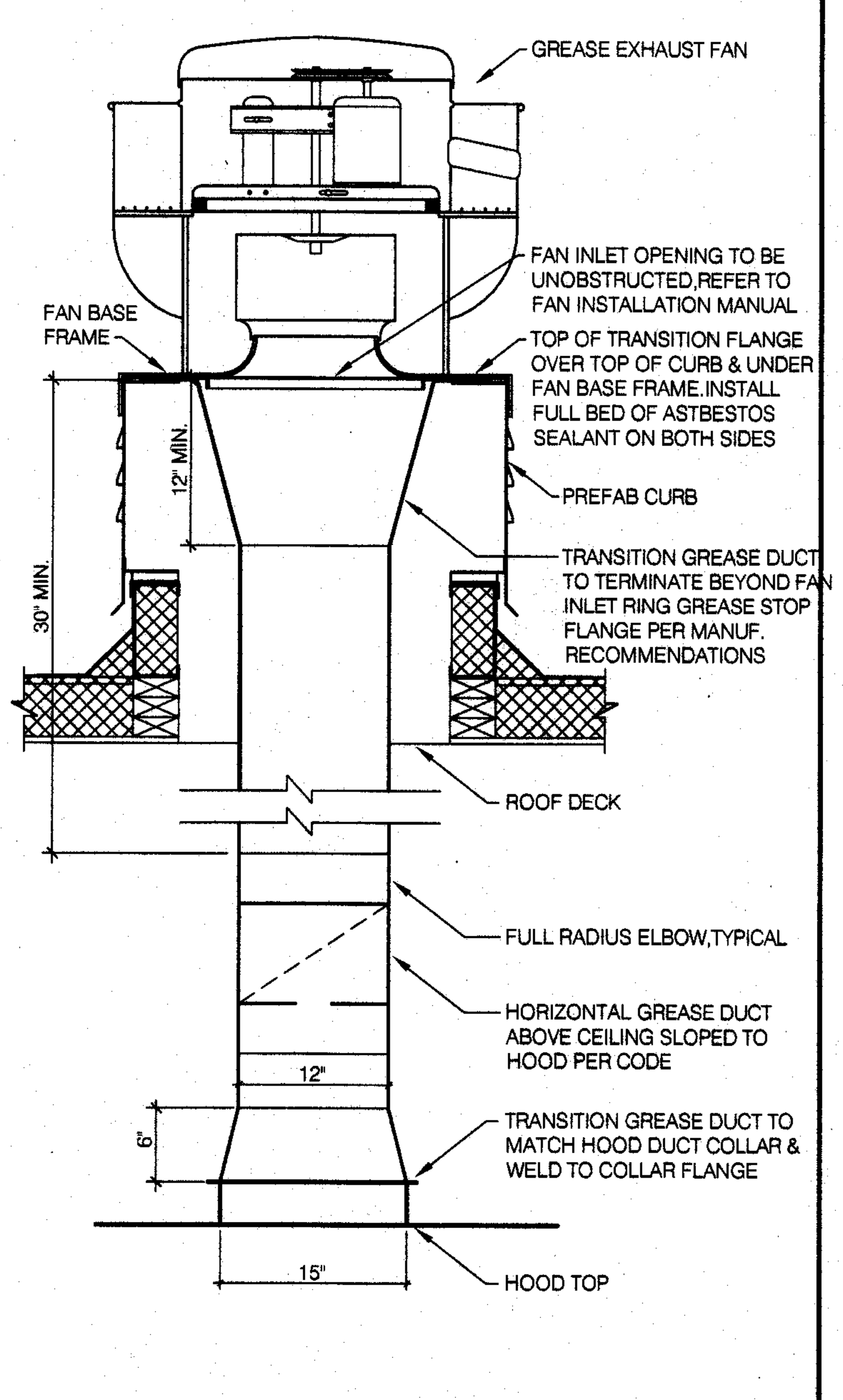


**TB HOOD DUCT TRANSITION** 1 1/2"=1'-0" | **18**

PRODUCT DESCRIPTION:

3M FIRE BARRIER DUCT WRAP 615+ IS A FIRE RESISTANT WRAP CONSISTING OF AN INORGANIC FIBER BLANKET ENCAPSULATED WITH A SCRIM-REINFORCED FOIL. THE PRODUCT IS 1-1/2 IN. THICK, 6pcf DENSITY. IT IS USED TO FIRE RATE COMMERCIAL KITCHEN GREASE DUCTS AS WELL AS VENTILATION DUCTS, AND IS A PROVEN ALTERNATIVE TO 1 OR 2 HOUR FIRE RESISTANT RATED SHAFT ENCLOSURES. WITH ITS EXCELLENT INSULATING CAPABILITIES, LOW WEIGHT AND THIN PROFILE, IT IS AN IDEAL CHOICE FOR A DUCT ENCLOSURE SYSTEM. THIS NON-ASBESTOS WRAP INSTALLS EASILY BECAUSE OF ITS HIGH FLEXIBILITY AND STRENGTH.

APPLICATIONS:

TWO-LAYER APPLICATIONS OF 3M FIRE BARRIER DUCT WRAP 615+ MEET THE CRITERIA OF ASTM E 2336 'STANDARD TEST METHODS FOR FIRE RESISTIVE GREASE DUCT ENCLOSURE SYSTEMS'.

3M FIRE BARRIER DUCT WRAP 615+ AS SINGLE LAYER FIRE RESISTANT WRAP APPLICATION HAS PASSED THE ISO 6944 'FIRE RESISTANT TESTS - VENTILATION DUCTS'.

3M FIRE BARRIER DUCT WRAP 615+ IS AN IDEAL FIRE RESISTIVE ENCLOSURE FOR COMMERCIAL KITCHEN GREASE DUCTS AND VENTILATION AIR DUCTS. IT IS A PROVEN PERFORMANCE ALTERNATIVE TO A 1 OR 2 HOUR FIRE RESISTANT RATED SHAFT ENCLOSURE AND PROVIDES ZERO CLEARANCE TO COMBUSTIBLE CONSTRUCTION THROUGH THE ENTIRE ENCLOSURE SYSTEM. 3M FIRE BARRIER WATER TIGHT SEALANT 1000 NS, 3M FIRE BARRIER WATER TIGHT SEALANT 1003 SL OR 3M FIRE BARRIER WATER TIGHT SEALANT 2000+ SILICONE SEALANTS IS USED IN COMBINATION WITH 3M FIRE BARRIER DUCT WRAP 615+ TO FIRESTOP THE DUCT WHEN THE DUCT PENETRATES FIRE RATED FLOORS AND WALLS.

INSTALLATION TECHNIQUES:

3M FIRE BARRIER DUCT WRAP 615+ SHOULD BE INSTALLED PER THE APPLICATION DESIGN LISTING IN ACCORDANCE WITH FOLLOWING BASIC INSTALLATION INSTRUCTIONS.

A. MATERIAL AND EQUIPMENT
- 3M FIRE BARRIER DUCT WRAP 615+ BLANKET, 1-1/2 IN. (38 MM) THICK, 24 IN. (60 CM) OR 48 IN. (121 CM) WIDE, 25 FT. (635 CM) STANDARD LENGTH. THE 48 IN. (121 CM) WIDE BLANKET HELPS TO MINIMIZE WASTE.
- ALUMINUM FOIL TAPE.
- MINIMUM 3/4 IN. (19 MM) WIDE FILAMENT TAPE.
- STAINLESS STEEL BANDING MATERIAL, MINIMUM 1/2 IN. (12,7 MM) WIDE, MINIMUM 0.015 IN. (0,38 MM) THICK, WITH STAINLESS STEEL BANDING CLIPS.
- HAND BANDING TENSIONER, CRIMPING TOOL AND BANDING CUTTER.
- MINIMUM 12 GAUGE COPPER-COATED STEEL INSULATION PINS USED WITH MINIMUM 2-1/2 IN. (38 MM) SQUARE GALVANIZED STEEL OR STAINLESS SPEED CLIPS OR 1-12 IN. (38 MM) DIA. ROUND OR EQUIVALENT SIZED INSULATION CUP-HEAD PINS.
- CAPACITOR DISCHARGE STUD GUN.
- ACCESS DOOR HARDWARE: FOUR GALVANIZED STEEL THREAD RODS, 1/4 IN. (6 MM) IN DIAMETER BY MINIMUM 6 IN. LONG (152 MM) WITH 1/4 IN. (6 MM) WING NUTS AND 1/4 IN. (6 MM) WASHERS.
- 4 IN. (102 MM) LONG STEEL HOLLOW TUBING TO FIT THREADED RODS.
- MINIMUM 4 PCF (64 KG/M³) DENSITY MINERAL WOOL OR SCRAP PIECES OF 3M FIRE BARRIER DUCT WRAP 615+.
- 3M FIRE BARRIER WATER TIGHT SEALANT 1000 NS, 1003 SL OR 3M FIRE BARRIER SILICONE SEALANT 2000+.

B. STORAGE

THE 3M FIRE BARRIER DUCT WRAP 615+ AND 3M FIRE BARRIER WATER TIGHT SEALANT 1000 NS, 1003 SL OR 3M FIRE BARRIER SILICONE SEALANT 2000+ MUST BE STORED IN A DRY WAREHOUSE ENVIRONMENT. PALLETS SHOULD NOT BE STACKED.

C. PREPARATORY WORK

3M FIRE BARRIER DUCT WRAP 615+ IS INSTALLED WITH COMMON TOOLS, SUCH AS KNIVES, BANDERS AND CAPACITOR DISCHARGE GUNS FOR APPLYING INSULATION PINS. IN ORDER TO INSTALL THE DUCT FIRESTOP SYSTEM, THE SURFACES OF ALL THE OPENINGS AND PENETRATING ITEMS NEED TO BE CLEAN, DRY, FROST FREE AND FREE OF DUST.

D. METHOD (TWO-LAYER FOR ASTM E 2336)

NOTE: THE GENERAL INSTRUCTIONS FOR INSTALLING 3M FIRE BARRIER DUCT WRAP 615+ INCLUDE A TWO-LAYER WRAP CONSTRUCTION OF 24-INCH 3M FIRE BARRIER DUCT WRAP 615+ BLANKET APPLIED DIRECTLY TO A GREASE DUCT. TO MINIMIZE WASTE, 3M FIRE BARRIER DUCT WRAP 615+ MATERIAL SHOULD BE ROLLED OUT TAUTLY BEFORE MEASURING. THE FIRST LAYER OF 3M FIRE BARRIER DUCT WRAP 615+ BLANKET IS WRAPPED AROUND THE PERIMETER OF THE DUCT AND IS CUT TO A LENGTH TO OVERLAP ITSELF NOT LESS THAN 3 IN. (76 MM). THE OVERLAP MADE BY ADJACENT BLANKETS FORMS THE "LONGITUDINAL" OVERLAP. ALUMINUM FOIL TAPE IS USED TO SEAL ALL CUT EDGES OF THE BLANKET AND ANY TEARS IN THE FOIL SCRIM. THIS FIRST LAYER IS TEMPORARILY HELD IN PLACE USING FILAMENT TAPE. THE FIRST LAYER DOES NOT REQUIRE STAINLESS STEEL BANDING.

THE SECOND LAYER OF 3M FIRE BARRIER DUCT WRAP 615+ BLANKET IS WRAPPED AROUND THE PERIMETER OF THE PREVIOUSLY INSTALLED FIRST LAYER OF 615+, AND IS CUT TO A LENGTH TO OVERLAP ITSELF NOT LESS THAN 3 IN. (76 MM). THE CENTERLINE OF THE SECOND LAYER OF BLANKET SHOULD BE CENTERED OVER THE OVERLAP OF THE FIRST LAYER. THE SECOND LAYER OF BLANKET REQUIRES LONGITUDINAL OVERLAP ONTO ADJACENT BLANKETS OF NOT LESS THAN 3 IN. (76 MM). THE SECOND LAYER OF BLANKET IS ALSO HELD IN PLACE USING FILAMENT TAPE. THE SECOND LAYER OF WRAP REQUIRES PERMANENT FASTENING WITH STAINLESS STEEL BANDING OR ROWS OF WELD PINS (IMPALING OR CUP-HEAD STYLE).

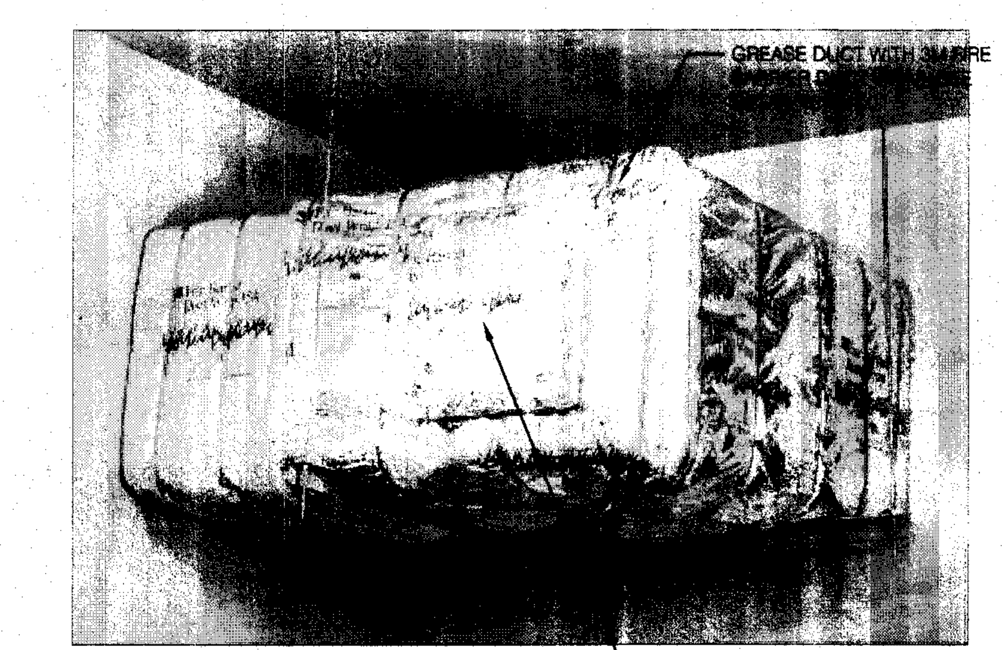

3M

**Fire Barrier Duct Wrap 615+**

Duct Wrap Fire Protection System for Commercial Kitchen Grease and Ventilation Air Ducts

**Product Data**

CLASSIFIED UL — BATTS AND BLANKETS FOR USE IN FIRE RESISTIVE DUCT ASSEMBLIES SEE UL FIRE RESISTANCE DIRECTORY
LISTED ULC — DUCT INSULATION
LISTED — FIRESTOP SYSTEMS SEE INTERTEK DIRECTORY
LISTED — FIRESTOP SYSTEMS SEE INTERTEK DIRECTORY



ACCESS DOOR, SEE DETAIL 3 / M4.0

NFPA 96 Compliance 1998 Edition — Complies with International Mechanical Code — Complies with Standard Mechanical Code

**HOOD WRAP MANUFACTURER** N.T.S. | **6**

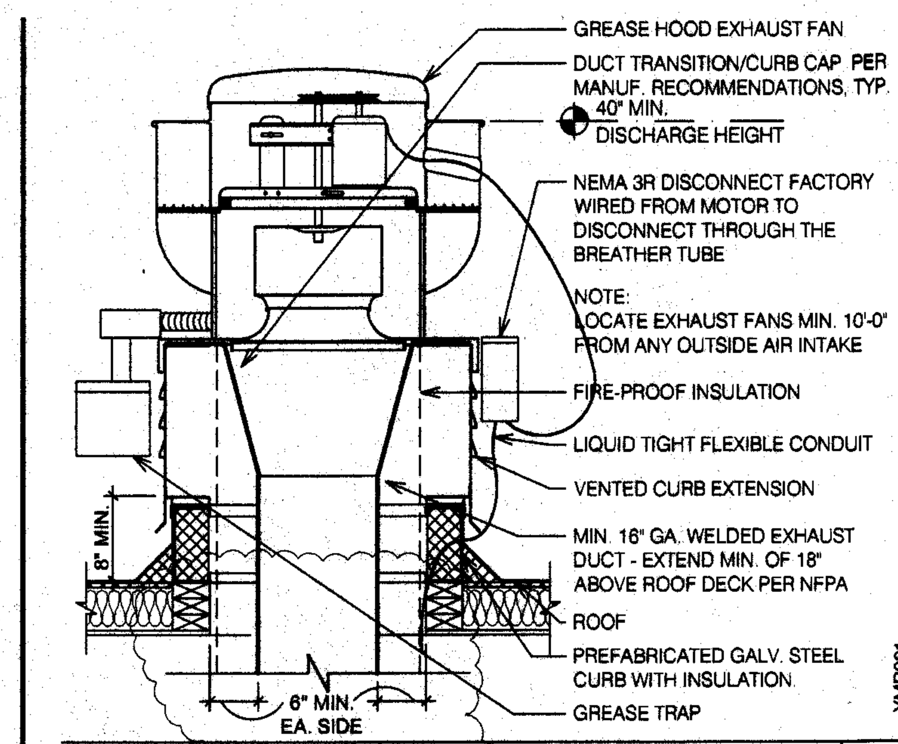


**GREASE HOOD EXHAUST FAN** N.T.S. | **1**

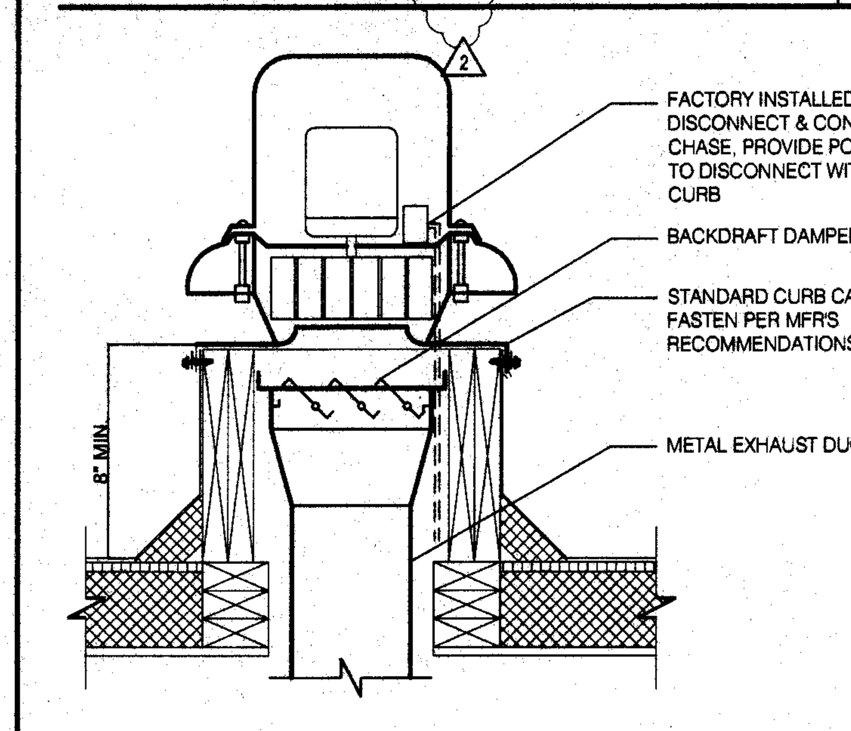


**TOILET EXHAUST FAN** N.T.S. | **2**

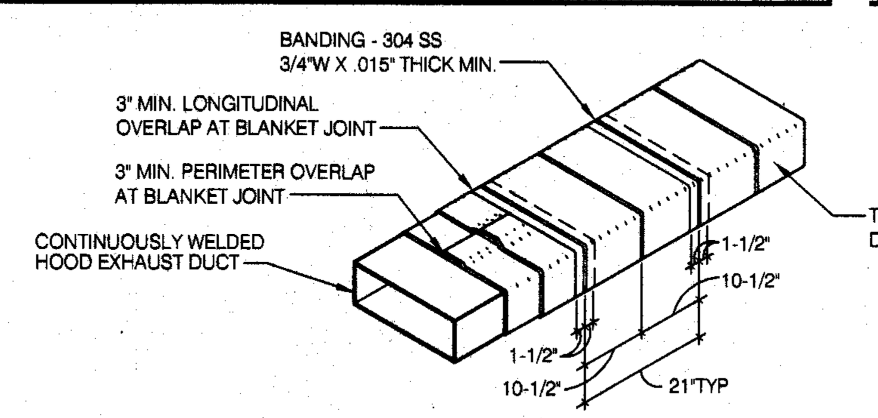


BANDING REQUIREMENTS: USE 304 STAINLESS STEEL BANDS A MAXIMUM 1-1/2" FROM BLANKET EDGE AND SPACED A MAXIMUM OF 10-1/2" ON CENTER.

NOTES:

1. WRAP GREASE DUCT CONTINUOUS AS SHOWN FROM CONNECTION AT FAN THROUGH CURB AND EXTEND 18" MIN. BELOW ROOF DECK.
2. FOR HORIZONTAL RUNS OF EXHAUST DUCTS PROVIDE TYPICAL TRAPEZE SUPPORT SYSTEM WITH 1/2" HANGER RODS A MAXIMUM OF 6" FROM INSULATION EDGE. TRAPEZE SUPPORTS SHALL BE SPACED A MAXIMUM OF 60" ON CENTER FROM CENTERLINE OF VERTICAL EXHAUST DUCT.
3. SLOPE HORIZONTAL EXHAUST DUCT RUNS A MINIMUM OF 1/4" PER FOOT (2% SLOPE) TOWARDS EXHAUST HOOD.
4. PROVIDE INSULATED ACCESS DOOR OR PANEL NEAR MID POINT OF EXHAUST DUCT RUN FOR CLEANING AND INSPECTION OF DUCT. ADDIONAL ACCESS DOORS PER CODE, SEE SHEET M2.0 FOR LOCATIONS. PROVIDE AN APPROVED SIGN ON ACCESS DOOR OR PANEL WHICH READS " ACCESS PANEL DO NOT OBSTRUCT"

**KITCHEN HOOD EXHAUST DUCT SYSTEM DETAIL** N.T.S. | **15**

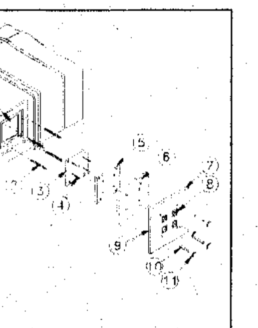

**Figure 2**
**3M™ Fire Barrier Duct Wrap 615+ Commercial Kitchen Grease Duct Systems 1 or 2 Hour Access Door System**

1. Access Hole
2. 1/4 in. (6 mm) Dia. All Threaded Rods
3. Access Cover – 16 Gauge
4. Insulation Pins – Welded
5. First Layer 3M™ Fire Barrier Duct Wrap 615+ Cut Same Size As Cover
6. Second Layer 3M™ Fire Barrier Duct Wrap 615+ with 1 in. (25 mm) Overlap On All Sides
7. Third Layer 3M™ Fire Barrier Duct Wrap 615+ with 1 in. (25 mm) Overlap On All Sides
8. Speed Clips
9. Aluminum Tape Covering All Exposed Edges
10. Spool Pieces For Threaded Rods
11. 1/4 in. (6 mm) Diameter Wings Nuts

System Integrity is limited by quality of installation. Consult Current Independent Testing Laboratories (Intertek, UL) For Design or System Details.

**Access Door Installation**

Four galvanized steel threaded rods, 1/4 in. diameter (6,35 mm) by 4-1/2 in. to 5 in. long [illegible] are welded to the duct at the corners of the door opening [illegible] over the rods to act as protection for the 3M™ Fire Barrier Duct Wrap 615+ when fastening the door. Four insulation pins are welded to the door panel for installation of the blanket. [illegible] Wrap 615+ is cut approximately the same size as the [illegible] the panel. *It is essential that this layer fit tightly against the wrap surrounding the access opening* [illegible] *through openings.* A second layer of 3M™ Fire Barrier Duct Wrap 615+ [illegible] minimum of 1 in. (25,4 mm). A third layer of 3M™ Fire Barrier Duct Wrap 615+ is cut so as to overlap the second layer by a minimum of 1 in. (25,4 mm). The third layer [illegible] place with galvanized or stainless steel speed clips. [illegible] beyond the outer layer of 3M™ Fire Barrier Duct Wrap 615+ shall be turned down to avoid sharp points on the door. The insulated door panel [illegible] over the threaded rods and held in place with washers and wing nuts. The details are shown in Figure 2.

APPROVED
City of San Jose, Building Division
☐ Building ☐ Plumbing ☐ Mechanical
☐ Electrical ☐ Zoning
GARY VANWEGEN (408) 277-8185
Plan No. Date:

**DUCT WRAP ACCESS DOOR** N.T.S. | **3**

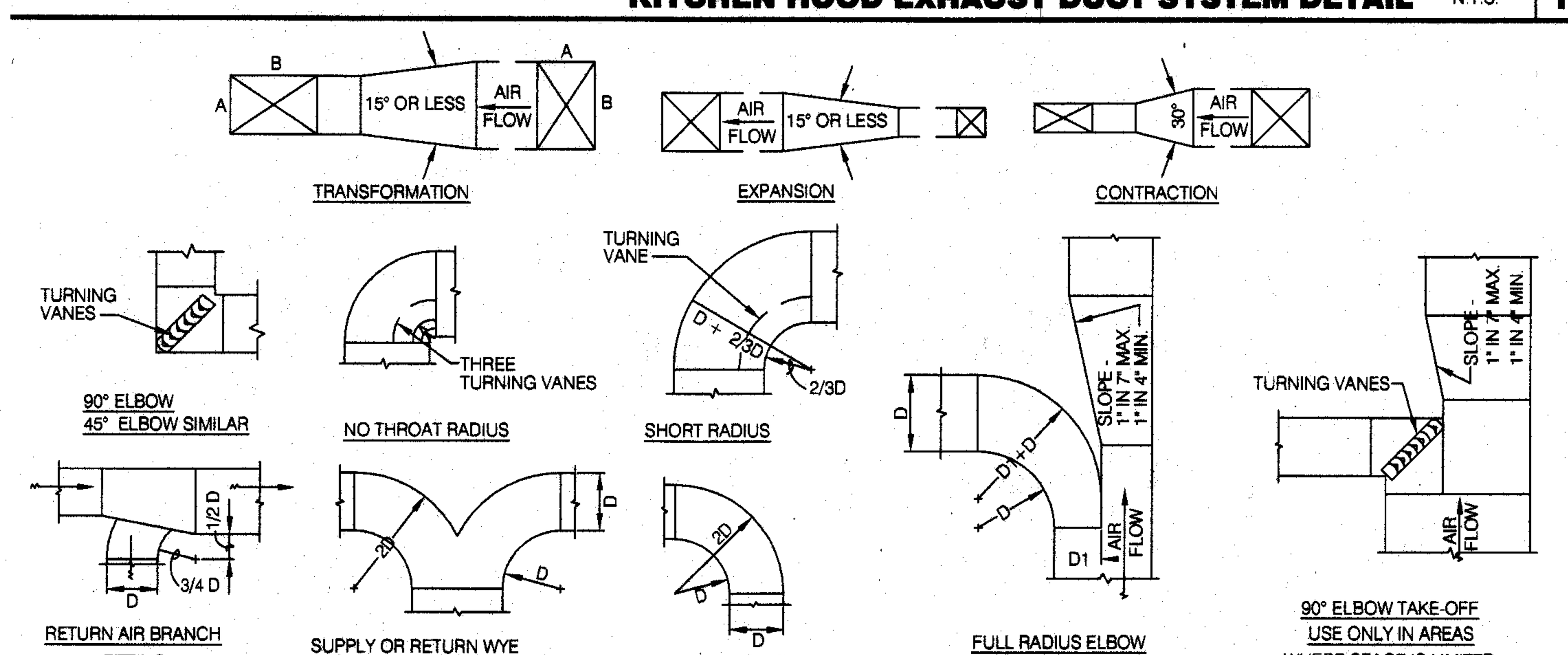


**TYPICAL DUCTWORK DETAILS** N.T.S. | **16**

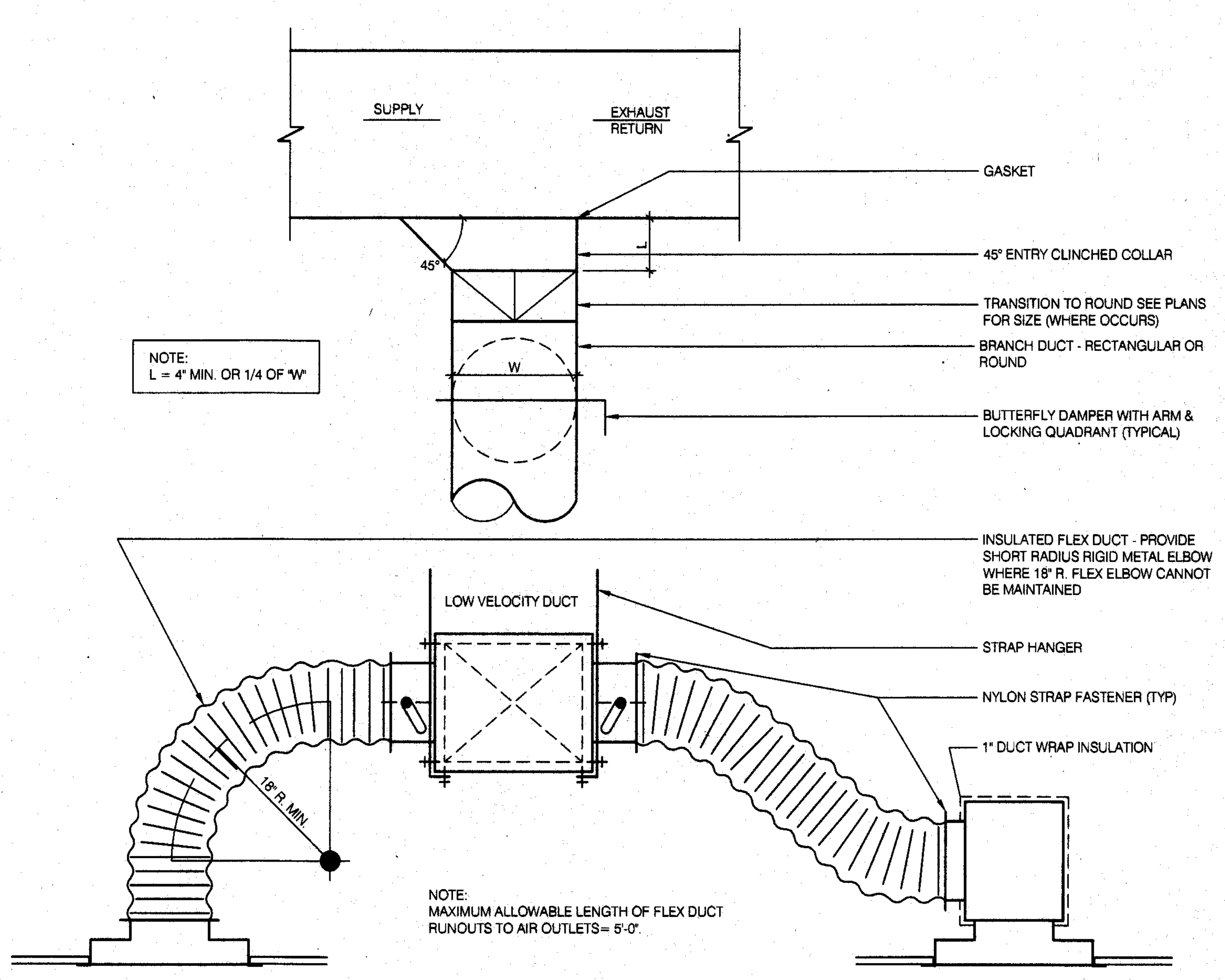


**CEILING DIFFUSER CONNECTIONS** 3/8" = 1'-0" | **8**

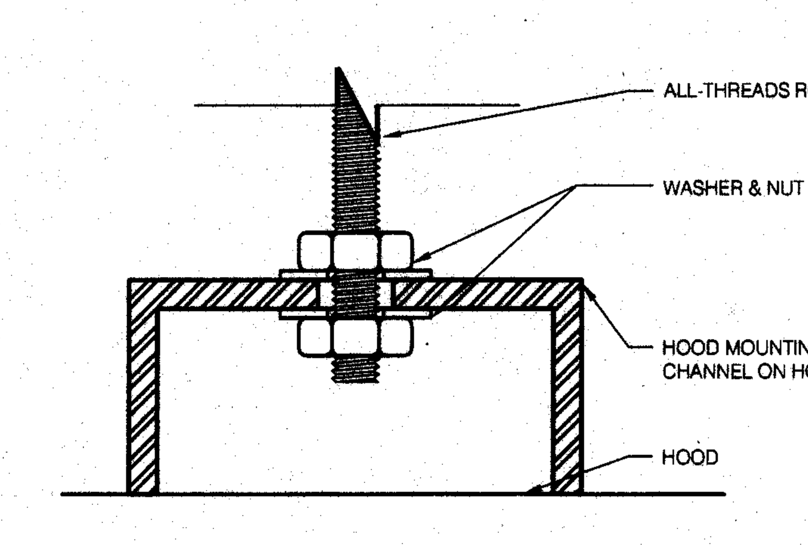


**BOLT CONNECTION TO HOOD** N.T.S. | **4**

VMI architecture
Design · Planning · Interiors
637 5th Avenue San Rafael, CA 94901
415-451-2500 415-451-2595 fax
www.vmarch.com

VMI JOB NUMBER
Y1022

LICENSED ARCHITECT
HUGH EDWARD MURPHY
No. C17928
REN. 10/31/11
STATE OF CALIFORNIA

RECORD DATES

| | |
|---|---|
| DD SUBMITTAL | 10-21-10 |
| BLDG. SUBMITTAL | 6-10-11 |
| BID SET | - |
| CONTRACT SET | - |

REVISIONS

2 08/24/11 PC Comments/ Plan Updates

CLIENT
TACO BELL CORP
1 GLEN BELL WAY, MD# 534
IRVINE, CA 92618

SITE #286119

PROJECT
TACO BELL
840 S. Bascom Avenue
San Jose, CA 95128-2605
APN #282-42-038

TY07_AUG09P

MECHANICAL AND HOOD DETAILS

# M4.0

PERMIT FILE # CP10-060

Printed on Recycled Paper at American Draft Source

W:\Data\Yum_TB\Y1022_San Jose_S Bascom_S286119\03_cd_current\109_1022_M5-0.dwg By: EALEXANDER Saved on: 8/17/2011 2:59:18 PM

ALL IDEAS, DESIGNS, ARRANGEMENTS AND PLANS INDICATED BY THIS DRAWING ARE OWNED BY, AND THE PROPERTY OF THIS OFFICE AND WERE CREATED, EVOLVED AND DEVELOPED FOR USE ON, AND IN CONNECTION WITH, THE SPECIFIED PROJECT. NONE OF SUCH IDEAS, DESIGNS, ARRANGEMENTS OR PLANS SHALL BE USED BY OR DISCLOSED TO ANY PERSON, FIRM OR CORPORATION FOR ANY PURPOSE WHATSOEVER WITHOUT THE WRITTEN PERMISSION OF PROJECT ARCHITECT. WRITTEN DIMENSIONS ON THESE DRAWINGS SHALL HAVE PRECEDENCE OVER SCALE DIMENSIONS. CONTRACTORS SHALL VERIFY AND BE RESPONSIBLE FOR, ALL DIMENSIONS AND CONDITIONS ON THE JOB AND THIS OFFICE MUST BE NOTIFIED OF ANY VARIATION FROM THE DIMENSIONS AND CONDITIONS SHOWN BY THESE DRAWINGS. SHOP DETAILS OF ADEQUATE SCALE MUST BE SUBMITTED TO THIS OFFICE FOR APPROVAL BEFORE PROCEEDING WITH FABRICATION ON ITEMS SO NOTED.

## CERTIFICATE OF COMPLIANCE and FIELD INSPECTION ENERGY CHECKLIST (Part 1 of 4) MECH-1C

| Project Name | | | | Date |
|---|---|---|---|---|
| *Taco Bell* | | | | *7/18/2011* |
| Project Address | | Climate Zone | Total Cond. Floor Area | Addition Floor Area |
| *840 S. Bascom Avenue San Jose* | | *4* | *2,774* | *n/a* |

**GENERAL INFORMATION**

| | | | |
|---|---|---|---|
| Building Type: | ☑ Nonresidential | ☐ High-Rise Residential | ☐ Hotel/Motel Guest Room |
| ☐ Schools (Public School) | ☐ Relocatable Public School Bldg. | ☑ Conditioned Spaces | ☐ Unconditioned Spaces (affidavit) |
| Phase of Construction: | ☑ New Construction | ☐ Addition | ☐ Alteration |
| Approach of Compliance: | ☐ Component | ☐ Overall Envelope TDV Energy | ☐ Unconditioned (file affidavit) |
| Front Orientation: N, E, S, W or in Degrees: | *270 deg* | | |

**HVAC SYSTEM DETAILS**

| Equipment[2] | Inspection Criteria | FIELD INSPECTION ENERGY CHECKLIST — Meets Criteria or Requirements: Pass | Fail – Describe Reason[2] |
|---|---|---|---|
| Item or System Tags (i.e. AC-1, RTU-1, HP-1) | *DHW Heater* | ☐ | ☐ |
| Equipment Type[3]: | *Gas Fired DHW Boiler* | ☐ | ☐ |
| Number of Systems | *1* | ☐ | ☐ |
| Max Allowed Heating Capacity[1] | *199,000 Btu/hr* | ☐ | ☐ |
| Minimum Heating Efficiency[1] | *80 %* | ☐ | ☐ |
| Max Allowed Cooling Capacity[1] | *n/a* | ☐ | ☐ |
| Cooling Efficiency[1] | *n/a* | ☐ | ☐ |
| Duct Location/ R-Value | *n/a* | ☐ | ☐ |
| When duct testing is required, submit **MECH-4A & MECH-4-HERS** | *n/a* | ☐ | ☐ |
| Economizer | *n/a* | ☐ | ☐ |
| Thermostat | *n/a* | ☐ | ☐ |
| Fan Control | *n/a* | ☐ | ☐ |

| Equipment[2] | Inspection Criteria | FIELD INSPECTION ENERGY CHECKLIST — Pass | Fail – Describe Reason[2] |
|---|---|---|---|
| Item or System Tags (i.e. AC-1, RTU-1, HP-1) | *Customer HVAC* | ☐ | ☐ |
| Equipment Type[3]: | *Packaged DX* | ☐ | ☐ |
| Number of Systems | *1* | ☐ | ☐ |
| Max Allowed Heating Capacity[1] | *96,000 Btu/hr* | ☐ | ☐ |
| Minimum Heating Efficiency[1] | *80% AFUE* | ☐ | ☐ |
| Max Allowed Cooling Capacity[1] | *98,000 Btu/hr* | ☐ | ☐ |
| Cooling Efficiency[1] | *11.2 EER* | ☐ | ☐ |
| Duct Location/ R-Value | *Attic, Ceiling Ins, vented / 6.0* | ☐ | ☐ |
| When duct testing is required, submit **MECH-4A & MECH-4-HERS** | *No* | ☐ | ☐ |
| Economizer | *Fixed Temp (Integrated)* | ☐ | ☐ |
| Thermostat | *Setback Required* | ☐ | ☐ |
| Fan Control | *Constant Volume* | ☐ | ☐ |

1. If the Actual Installed equipment performance efficiency and capacity is less than the Proposed (from the energy compliance submittal or from the building plans) the responsible party shall resubmit energy compliance to include the new changes.
2. For additional detailed discrepancy use Page 2 of the Inspection Checklist Form. Compliance fails if a Fail box is checked.
3. Indicate Equipment Type: Gas (Pkg or, Split), VAV, HP (Pkg or split), Hydronic, PTAC, or other.

*EnergyPro 5.1 by EnergySoft* *User Number: 1005* *RunCode: 2011-07-18T14:54:45* *ID: 0602TAC* *Page 14 of 37*

## CERTIFICATE OF COMPLIANCE and FIELD INSPECTION ENERGY CHECKLIST (Part 1 of 4) MECH-1C

| Project Name | | | | Date |
|---|---|---|---|---|
| *Taco Bell* | | | | *7/18/2011* |
| Project Address | | Climate Zone | Total Cond. Floor Area | Addition Floor Area |
| *840 S. Bascom Avenue San Jose* | | *4* | *2,774* | *n/a* |

**GENERAL INFORMATION**

| | | | |
|---|---|---|---|
| Building Type: | ☑ Nonresidential | ☐ High-Rise Residential | ☐ Hotel/Motel Guest Room |
| ☐ Schools (Public School) | ☐ Relocatable Public School Bldg. | ☑ Conditioned Spaces | ☐ Unconditioned Spaces (affidavit) |
| Phase of Construction: | ☑ New Construction | ☐ Addition | ☐ Alteration |
| Approach of Compliance: | ☐ Component | ☐ Overall Envelope TDV Energy | ☐ Unconditioned (file affidavit) |
| Front Orientation: N, E, S, W or in Degrees: | *270 deg* | | |

**HVAC SYSTEM DETAILS**

| Equipment[2] | Inspection Criteria | FIELD INSPECTION ENERGY CHECKLIST — Meets Criteria or Requirements: Pass | Fail – Describe Reason[2] |
|---|---|---|---|
| Item or System Tags (i.e. AC-1, RTU-1, HP-1) | *Service HVAC* | ☐ | ☐ |
| Equipment Type[3]: | *Packaged DX* | ☐ | ☐ |
| Number of Systems | *1* | ☐ | ☐ |
| Max Allowed Heating Capacity[1] | *120,000 Btu/hr* | ☐ | ☐ |
| Minimum Heating Efficiency[1] | *80% AFUE* | ☐ | ☐ |
| Max Allowed Cooling Capacity[1] | *117,000 Btu/hr* | ☐ | ☐ |
| Cooling Efficiency[1] | *11.3 EER* | ☐ | ☐ |
| Duct Location/ R-Value | *Attic, Ceiling Ins, vented / 6.0* | ☐ | ☐ |
| When duct testing is required, submit **MECH-4A & MECH-4-HERS** | *No* | ☐ | ☐ |
| Economizer | *Fixed Temp (Integrated)* | ☐ | ☐ |
| Thermostat | *Setback Required* | ☐ | ☐ |
| Fan Control | *Constant Volume* | ☐ | ☐ |

| Equipment[2] | Inspection Criteria | FIELD INSPECTION ENERGY CHECKLIST — Pass | Fail – Describe Reason[2] |
|---|---|---|---|
| Item or System Tags (i.e. AC-1, RTU-1, HP-1) | | ☐ | ☐ |
| Equipment Type[3]: | | ☐ | ☐ |
| Number of Systems | | ☐ | ☐ |
| Max Allowed Heating Capacity[1] | | ☐ | ☐ |
| Minimum Heating Efficiency[1] | | ☐ | ☐ |
| Max Allowed Cooling Capacity[1] | | ☐ | ☐ |
| Cooling Efficiency[1] | | ☐ | ☐ |
| Duct Location/ R-Value | | ☐ | ☐ |
| When duct testing is required, submit **MECH-4A & MECH-4-HERS** | | ☐ | ☐ |
| Economizer | | ☐ | ☐ |
| Thermostat | | ☐ | ☐ |
| Fan Control | | ☐ | ☐ |

1. If the Actual Installed equipment performance efficiency and capacity is less than the Proposed (from the energy compliance submittal or from the building plans) the responsible party shall resubmit energy compliance to include the new changes.
2. For additional detailed discrepancy use Page 2 of the Inspection Checklist Form. Compliance fails if a Fail box is checked.
3. Indicate Equipment Type: Gas (Pkg or, Split), VAV, HP (Pkg or split), Hydronic, PTAC, or other.

*EnergyPro 5.1 by EnergySoft* *User Number: 1005* *RunCode: 2011-07-18T14:54:45* *ID: 0602TAC* *Page 15 of 37*

## CERTIFICATE OF COMPLIANCE and FIELD INSPECTION ENERGY CHECKLIST (Part 2 of 4) MECH-1C

Project Name: *Taco Bell* Date: *7/18/2011*

**Discrepancies:**

*EnergyPro 5.1 by EnergySoft* *User Number: 1005* *RunCode: 2011-07-18T14:54:45* *ID: 0602TAC* *Page 16 of 37*

## CERTIFICATE OF COMPLIANCE and FIELD INSPECTION ENERGY CHECKLIST (Part 3 of 4) MECH-1C

Project Name: *Taco Bell* Date: *7/18/2011*

Required Acceptance Tests

### Designer:

This form is to be used by the designer and attached to the plans. Listed below are all the acceptance tests for mechanical systems. The designer is required to check the applicable boxes by all acceptance tests that apply and listed all equipment that requires an acceptance test. If all equipment of a certain type requires a test, list the equipment description and the number of systems. The NA number designates the Section in the Appendix of the Nonresidential Reference Appendices Manual that describes the test. Since this form will be part of the plans, completion of this section will allow the responsible party to budget for the scope of work appropriately.

### Building Departments:

**Systems Acceptance:** Before occupancy permit is granted for a newly constructed building or space, or a new space-conditioning system serving a building or space is operated for normal use, all control devices serving the building or space shall be certified as meeting the Acceptance Requirements for Code Compliance.
**Systems Acceptance:** Before occupancy permit is granted. All newly installed HVAC equipment must be tested using the Acceptance Requirements.

The MECH-1C form is not considered a completed form and is not to be accepted by the building department unless the correct boxes are checked. The equipment requiring testing, person performing the test (Example: HVAC installer, TAB contractor, controls contractor, PE in charge of project) and what Acceptance test must be conducted. The following checked-off forms are required for **ALL** newly installed equipment. In addition a Certificate of Acceptance forms shall be submitted to the building department that certifies plans, specifications, installation, certificates, and operating and maintenance information meet the requirements of §10-103(b) and Title-24 Part 6. The building inspector must receive the properly filled out and signed forms before the building can receive final occupancy.

| TEST DESCRIPTION: Equipment Requiring Testing or Verification | Qty. | MECH-2A Outdoor Ventilation For VAV & CAV | MECH-3A Constant Volume & Single-Zone Unitary | MECH-4A Air Distribution Ducts | MECH-5A Economizer Controls | MECH-6A Demand Control Ventilation DCV | MECH-7A Supply Fan VAV | MECH-8A Valve Leakage Test | MECH-9A Supply Water Temp. Reset | MECH-10A Hydronic System Variable Flow Control | MECH-11A Automatic Demand Shed Control |
|---|---|---|---|---|---|---|---|---|---|---|---|
| *Trane YHC102* | *1* | ☐ | ☑ | ☐ | ☑ | ☑ | ☐ | ☐ | ☐ | ☐ | ☐ |
| *Trane YHC120* | *1* | ☐ | ☑ | ☐ | ☑ | ☐ | ☐ | ☐ | ☐ | ☐ | ☐ |
| | | ☐ | ☐ | ☐ | ☐ | ☐ | ☐ | ☐ | ☐ | ☐ | ☐ |
| | | ☐ | ☐ | ☐ | ☐ | ☐ | ☐ | ☐ | ☐ | ☐ | ☐ |
| | | ☐ | ☐ | ☐ | ☐ | ☐ | ☐ | ☐ | ☐ | ☐ | ☐ |
| | | ☐ | ☐ | ☐ | ☐ | ☐ | ☐ | ☐ | ☐ | ☐ | ☐ |
| | | ☐ | ☐ | ☐ | ☐ | ☐ | ☐ | ☐ | ☐ | ☐ | ☐ |
| | | ☐ | ☐ | ☐ | ☐ | ☐ | ☐ | ☐ | ☐ | ☐ | ☐ |
| | | ☐ | ☐ | ☐ | ☐ | ☐ | ☐ | ☐ | ☐ | ☐ | ☐ |
| | | ☐ | ☐ | ☐ | ☐ | ☐ | ☐ | ☐ | ☐ | ☐ | ☐ |
| | | ☐ | ☐ | ☐ | ☐ | ☐ | ☐ | ☐ | ☐ | ☐ | ☐ |
| | | ☐ | ☐ | ☐ | ☐ | ☐ | ☐ | ☐ | ☐ | ☐ | ☐ |
| | | ☐ | ☐ | ☐ | ☐ | ☐ | ☐ | ☐ | ☐ | ☐ | ☐ |
| | | ☐ | ☐ | ☐ | ☐ | ☐ | ☐ | ☐ | ☐ | ☐ | ☐ |

*EnergyPro 5.1 by EnergySoft* *User Number: 1005* *RunCode: 2011-07-18T14:54:45* *ID: 0602TAC* *Page 17 of 37*

## CERTIFICATE OF COMPLIANCE and FIELD INSPECTION ENERGY CHECKLIST (Part 4 of 4) MECH-1C

Project Name: *Taco Bell* Date: *7/18/2011*

| TEST DESCRIPTION: Equipment Requiring Testing | Qty. | MECH-12A Fault Detection & Diagnostics for DX Units | MECH-13A Automatic Fault Detection & Diagnostics for Air & Zone | MECH-14A Distributed Energy Storage DX AC Systems | MECH-15A Thermal Energy Storage (TES) Systems | Test Performed By: |
|---|---|---|---|---|---|---|
| *Trane YHC102* | *1* | ☐ | ☐ | ☐ | ☐ | |
| *Trane YHC120* | *1* | ☐ | ☐ | ☐ | ☐ | |
| | | ☐ | ☐ | ☐ | ☐ | |
| | | ☐ | ☐ | ☐ | ☐ | |
| | | ☐ | ☐ | ☐ | ☐ | |
| | | ☐ | ☐ | ☐ | ☐ | |
| | | ☐ | ☐ | ☐ | ☐ | |
| | | ☐ | ☐ | ☐ | ☐ | |
| | | ☐ | ☐ | ☐ | ☐ | |
| | | ☐ | ☐ | ☐ | ☐ | |
| | | ☐ | ☐ | ☐ | ☐ | |
| | | ☐ | ☐ | ☐ | ☐ | |
| | | ☐ | ☐ | ☐ | ☐ | |
| | | ☐ | ☐ | ☐ | ☐ | |
| | | ☐ | ☐ | ☐ | ☐ | |
| | | ☐ | ☐ | ☐ | ☐ | |
| | | ☐ | ☐ | ☐ | ☐ | |
| | | ☐ | ☐ | ☐ | ☐ | |
| | | ☐ | ☐ | ☐ | ☐ | |
| | | ☐ | ☐ | ☐ | ☐ | |
| | | ☐ | ☐ | ☐ | ☐ | |
| | | ☐ | ☐ | ☐ | ☐ | |
| | | ☐ | ☐ | ☐ | ☐ | |
| | | ☐ | ☐ | ☐ | ☐ | |
| | | ☐ | ☐ | ☐ | ☐ | |
| | | ☐ | ☐ | ☐ | ☐ | |
| | | ☐ | ☐ | ☐ | ☐ | |
| | | ☐ | ☐ | ☐ | ☐ | |
| | | ☐ | ☐ | ☐ | ☐ | |

*EnergyPro 5.1 by EnergySoft* *User Number: 1005* *RunCode: 2011-07-18T14:54:45* *ID: 0602TAC* *Page 18 of 37*

## AIR SYSTEM REQUIREMENTS (Part 1 of 2) MECH-2C

Project Name: *Taco Bell* Date: *7/18/2011*

| | | Indicate Air Systems Type (Central, Single Zone, Package, VAV, or etc...) | | |
|---|---|---|---|---|
| **Item or System Tags** (i.e. AC-1, RTU-1, HP-1) | | *Customer HVAC* | *Service HVAC* | |
| Number of Systems | | *1* | *1* | |
| | | **Indicate Page Reference on Plans or Schedule and Indicate the applicable exception(s)** | | |
| **MANDATORY MEASURES** | **T-24 Sections** | | | |
| Heating Equipment Efficiency | 112(a) | *80% AFUE* | *80% AFUE* | |
| Cooling Equipment Efficiency | 112(a) | *11.2 EER* | *11.3 EER* | |
| HVAC Heat Pump Thermostat | 112(b), 112(c) | *n/a* | *n/a* | |
| Furnace Controls/Thermostat | 112(c), 115(a) | *n/a* | *n/a* | |
| Natural Ventilation | 121(b) | *Yes* | *Yes* | |
| Mechanical Ventilation | 121(b) | *1,237 cfm* | *190 cfm* | |
| VAV Minimum Position Control | 121(c) | *No* | *No* | |
| Demand Control Ventilation | 121(c) | *Yes* | *No* | |
| Time Control | 122(e) | *Programmable Switch* | *Programmable Switch* | |
| Setback and Setup Control | 122(e) | *Setback Required* | *Setback Required* | |
| Outdoor Damper Control | 122(f) | *Auto* | *Auto* | |
| Isolation Zones | 122(g) | *n/a* | *n/a* | |
| Pipe Insulation | 123 | | | |
| Duct Location/ R-value | 124 | *Attic, Ceiling Ins, vented / 6.0* | *Attic, Ceiling Ins, vented / 6.0* | |
| **PRESCRIPTIVE MEASURES** | | | | |
| Calculated Design Heating Load | 144(a & b) | *n/a* | *n/a* | |
| Proposed Heating Capacity | 144(a & b) | *96,000 Btu/hr* | *120,000 Btu/hr* | |
| Calculated Design Cooling Load | 144(a & b) | *n/a* | *n/a* | |
| Proposed Cooling Capacity | 144(a & b) | *89,272 Btu/hr* | *86,868 Btu/hr* | |
| Fan Control | 144(c) | *Constant Volume* | *Constant Volume* | |
| DP Sensor Location | 144(c) | | | |
| Supply Pressure Reset (DDC only) | 144(c) | *Yes* | *Yes* | |
| Simultaneous Heat/Cool | 144(d) | *No* | *No* | |
| Economizer | 144(e) | *Fixed Temp (Integrated)* | *Fixed Temp (Integrated)* | |
| Heat Air Supply Reset | 144(f) | *Constant Temp* | *Constant Temp* | |
| Cool Air Supply Reset | 144(f) | *Constant Temp* | *Constant Temp* | |
| Electric Resistance Heating[1] | 144(g) | | | |
| Air Cooled Chiller Limitation | 144(i) | | | |
| Duct Leakage Sealing. If Yes, a MECH-4-A must be submitted | 144(k) | *No* | *No* | |

1. Total installed capacity (MBtu/hr) of all electric heat on this project exclusive of electric auxiliary heat for heat pumps. If electric heat is used explain which exception(s) to §144(g) apply.

*EnergyPro 5.1 by EnergySoft* *User Number: 1005* *RunCode: 2011-07-18T14:54:45* *ID: 0602TAC* *Page 19 of 37*

## WATER SIDE SYSTEM REQUIREMENTS (Part 2 of 2) MECH-2C

Project Name: *Taco Bell* Date: *7/18/2011*

| | | WATER[2] SIDE SYSTEMS: Chillers, Towers, Boilers, Hydronic Loops | | |
|---|---|---|---|---|
| **Item or System Tags** (i.e. AC-1, RTU-1, HP-1)[1] | | | | |
| Number of Systems | | | | |
| | | **Indicate Page Reference on Plans or Specification[2]** | | |
| **MANDATORY MEASURES** | **T-24 Sections** | | | |
| Equipment Efficiency | 112(a) | | | |
| Pipe Insulation | 123 | | | |
| **PRESCRIPTIVE MEASURES** | | | | |
| Cooling Tower Fan Controls | 144(a & b) | | | |
| Cooling Tower Flow Controls | 144(h) | | | |
| Variable Flow System Design | 144(h) | | | |
| Chiller and Boiler Isolation | 144(j) | | | |
| CHW and HHW Reset Controls | 144(j) | | | |
| WLHP Isolation Valves | 144(j) | | | |
| VSD on CHW, CW & WLHP Pumps>5HP | 144(j) | | | |
| DP Sensor Location | 144(j) | | | |

1. The proposed equipment need to match the building plans schedule or specifications. If a requirement is not applicable, put "N/A" in the column next to applicable section.
2. For each chiller, cooling tower, boiler, and hydronic loop (or groups of similar equipment) fill in the reference to sheet number and/or specification section and paragraph number where the required features are documented. If a requirement is not applicable, put "N/A" in the column next to applicable section.

| | | Service Hot Water, Pool Heating | | |
|---|---|---|---|---|
| **Item or System Tags** (i.e. WH-1, WHP, DHW, etc...)[1] | | *DHW Heater* | | |
| Number of Systems | | *1* | | |
| | | **Indicate Page Reference on Plans or Schedule[2]** | | |
| **MANDATORY MEASURES** | **T-24 Sections** | | | |
| SERVICE HOT WATER | | | | |
| Certified Water Heater | 111, 113(a) | *100 gallon* | | |
| Water Heater Efficiency | 113(b) | *80 %* | | |
| Service Water Heating Installation | 113(c) | *Controls Req.* | | |
| Pipe Insulation | 123 | *n/a* | | |
| POOL AND SPA | | | | |
| Pool and Spa Efficiency and Control | 114(a) | *n/a* | | |
| Pool and Spa Installation | 114(b) | *n/a* | | |
| Pool Heater – No Pilot Light | 115(c) | *n/a* | | |
| Spa Heater – No Pilot Light | 115(d) | *n/a* | | |
| Pipe Insulation | 123 | *Required* | | |

1. The Proposed equipment needs to match the building plans schedule or specifications. If a requirement is not applicable, put "N/A" in the column next to applicable section.
2. For each water heater, pool heater and domestic water loop (or groups of similar equipment) fill in the reference to sheet number and/or specification section and paragraph number where the required features are documented. If a requirement is not applicable, put "N/A" in the column.

*EnergyPro 5.1 by EnergySoft* *User Number: 1005* *RunCode: 2011-07-18T14:54:45* *ID: 0602TAC* *Page 20 of 37*

## MECHANICAL VENTILATION AND REHEAT MECH-3C

Project Name: *Taco Bell* Date: *7/18/2011*

MECHANICAL VENTILATION (§121(b)2) — REHEAT LIMITATION (§144(d))

| A | B | C | D | E | F | G | H | I | J | K | L | M | N |
|---|---|---|---|---|---|---|---|---|---|---|---|---|---|
| | AREA BASIS | | | OCCUPANCY BASIS | | | | | VAV MINIMUM | | | | |
| Zone/System | Condition Area (ft²) | CFM per ft² | Min CFM By Area B X C | Number Of People | CFM per Person | Min CFM by Occupant E X F | REQ'D V.A. Max of D or G | Design Ventilation Air CFM | 50% of Design Zone Supply CFM | B X 0.4 CFM / ft² | Max. of Columns H, J, K, 300 CFM | Design Minimum Air Setpoint | Transfer Air |
| *Customer* | *1,190* | *0.50* | *595* | | | | *595* | *1,190* | | | | | |
| *Restrooms* | *315* | *0.15* | *47* | | | | *47* | *47* | | | | | |
| *Customer HVAC* | | | | | | *Total* | *642* | *1,237* | | | | | |
| *Service* | *1,184* | *0.15* | *178* | | | | *178* | *178* | | | | | |
| *Office* | *85* | *0.15* | *13* | | | | *13* | *13* | | | | | |
| *Service HVAC* | | | | | | *Total* | *190* | *190* | | | | | |
| Totals | | | | | | | | Column I Total Design Ventilation Air | | | | | |

- C Minimum ventilation rate per Section §121, Table 121-A.
- E Based on fixed seat or the greater of the expected number of occupants and 50% of the CBC occupant load for egress purposes for spaces without fixed seating.
- H Required Ventilation Air (REQ'D V.A.) is the larger of the ventilation rates calculated on an AREA BASIS or OCCUPANCY BASIS (Column D or G).
- I Must be greater than or equal to H, or use Transfer Air (column N) to make up the difference.
- J Design fan supply CFM (Fan CFM) x 50%; or the design zone outdoor airflow rate per §121.
- K Condition area (ft²) x 0.4 CFM / ft²; or
- L Maximum of Columns H, J, K, or 300 CFM
- M This must be less than or equal to Column L and greater than or equal to the sum of Columns H plus N.
- N Transfer Air must be provided where the Required Ventilation Air (Column H) is greater than the Design Minimum Air (Column M). Where required, transfer air must be greater than or equal to the difference between the Required Ventilation Air (Column H) and the Design Minimum Air (Column M), Column H minus M.

*EnergyPro 5.1 by EnergySoft* *User Number: 1005* *RunCode: 2011-07-18T14:54:45* *ID: 0602TAC* *Page 21 of 37*

VMI architecture
Design · Planning · Interiors
637 5th Avenue San Rafael, CA 94901
415-451-2500 415-451-2595 fax
www.vmarch.com

VMI JOB NUMBER
Y1022

LICENSED ARCHITECT
HUGH EDWARD MURPHY
No. C17928
REN. 10/31/11
STATE OF CALIFORNIA

**APPROVED**
City of San Jose, Building Division
☐ Building ☐ Plumbing/Mechanical
☐ Electrical ☐ Zoning
GARY VAN WEGEN (408)277-8185
Plan No. __________ Date: ______

RECORD DATES

| | |
|---|---|
| DD SUBMITTAL | 10-21-10 |
| BLDG. SUBMITTAL | 6-10-11 |
| BID SET | - |
| CONTRACT SET | - |

REVISIONS

2 08/24/11 PC Comments/ Plan Updates

CLIENT
TACO BELL CORP
1 GLEN BELL WAY, MD# 534
IRVINE, CA 92618

SITE #286119

PROJECT
TACO BELL
840 S. Bascom Avenue
San Jose, CA 95128-2605
APN #282-42-038

TY07_AUG09P

2

TITLE 24 CALCULATIONS
M5.0

PERMIT FILE # CP10-060

Printed on Recycled Paper at American Draft Source

W:\Data\Vmi_TB\Y1022_San Jose_S Bascom_S286119\03_cd_current\110_1022_M5-1.dwg By: EALEXANDER Saved on: 8/17/2011 2:59:34 PM
ALL IDEAS, DESIGNS, ARRANGEMENTS AND PLANS INDICATED BY THIS DRAWING ARE OWNED BY, AND THE PROPERTY OF, THIS OFFICE AND WERE CREATED, EVOLVED AND DEVELOPED FOR USE ON, AND IN CONNECTION WITH, THE SPECIFIED PROJECT. NONE OF SUCH IDEAS, DESIGNS, ARRANGEMENTS OR PLANS SHALL BE USED BY OR DISCLOSED TO ANY PERSON, FIRM OR CORPORATION FOR ANY PURPOSE WHATSOEVER WITHOUT THE WRITTEN PERMISSION OF PROJECT ARCHITECT.
WRITTEN DIMENSIONS ON THESE DRAWINGS SHALL HAVE PRECEDENCE OVER SCALE DIMENSIONS. CONTRACTORS SHALL VERIFY AND BE RESPONSIBLE FOR ALL DIMENSIONS AND CONDITIONS ON THE JOB AND THIS OFFICE MUST BE NOTIFIED OF ANY VARIATION FROM THE DIMENSIONS AND CONDITIONS SHOWN BY THESE DRAWINGS. SHOP DETAILS OF ADEQUATE SCALE MUST BE SUBMITTED TO THIS OFFICE FOR APPROVAL BEFORE PROCEEDING WITH FABRICATION ON ITEMS SO NOTED.

## MECHANICAL EQUIPMENT DETAILS (Part 1 of 2) MECH-5C

Project Name: *Taco Bell* — Date: *7/18/2011*

### CHILLER AND TOWER SUMMARY

| Equipment Name | Type | Qty. | Efficiency | Tons | Qty. | GPM | Pumps BHP | Pump Control |
|---|---|---|---|---|---|---|---|---|
| | | | | | | | | |

### DHW / BOILER SUMMARY

| System Name | Type | Distribution | Qty. | Rated Input | Vol. (Gals) | Energy Factor or Eff. | Standby Loss or Btu/h | Tech Sch. Ib-Value | Status |
|---|---|---|---|---|---|---|---|---|---|
| 100 gallon | Large Gas | No Pipe Insulation | 1 | 199,000 | 100 | 0.60 | 1.00 % | 0.0 | New |

### MULTI-FAMILY CENTRAL WATER HEATING DETAILS

| Control | Hot Water Temp Qty. | Hot Water Temp BP | Type | In Plenum | Hot Water Piping Length (ft) Outside | Buried | Add 1/2" Insulation |
|---|---|---|---|---|---|---|---|
| | | | | | | | ☐ |
| | | | | | | | ☐ |
| | | | | | | | ☐ |

### CENTRAL SYSTEM RATINGS

| System Name | Type | Qty. | HEATING Output | Aux. kW | Efficiency | COOLING Output | Efficiency | Status |
|---|---|---|---|---|---|---|---|---|
| Trane YHC102 | Packaged DX | 1 | 86,000 | 0.0 | 80% AFUE | 86,000 | 11.2 EER | New |
| Trane YHC120 | Packaged DX | 1 | 120,000 | 0.0 | 80% AFUE | 117,000 | 11.2 EER | New |
| | | | | | | | | |
| | | | | | | | | |
| | | | | | | | | |
| | | | | | | | | |

### CENTRAL SYSTEM FAN SUMMARY

| Systems Name | Fan Type | Temperature Type | SUPPLY FAN CFM | SHP | RETURN FAN CFM | SHP |
|---|---|---|---|---|---|---|
| Trane YHC102 | Constant Volume | Fixed Temp (Single Zone) | 3,000 | 1.20 | none | |
| Trane YHC120 | Constant Volume | Fixed Temp (Integrated) | 3,600 | 1.44 | none | |
| | | | | | | |
| | | | | | | |
| | | | | | | |
| | | | | | | |

EnergyPro 5.1 by EnergySoft User Number: 1006 RunCode: 2011-07-18T14:54:46 ID: 0602TAC Page 32 of 37

## MECHANICAL MANDATORY MEASURES: NONRESIDENTIAL MECH-MM

Project Name: *Taco Bell* — Date: *7/18/2011*

### Equipment and System Efficiencies

§111: Any appliance for which there is a California standard established in the Appliance Efficiency Regulations will comply with the applicable standard.

§115(a): Fan type central furnaces shall not have a pilot light.

§123: Piping, except that conveying fluids at temperatures between 60 and 105 degrees Fahrenheit, or within HVAC equipment, shall be insulated in accordance with Standards Section 123.

§124: Air handling duct systems shall be installed and insulated in compliance with Sections 601, 602, 603, 604, and 605 of the CMC Standards.

### Controls

§122(e): Each space conditioning system shall be installed with one of the following:

1A. Each space conditioning system serving building types such as offices and manufacturing facilities (and all others not explicitly exempt from the requirements of Section 112 (d)) shall be installed with an automatic time switch with an accessible manual override that allows operation of the system during off-hours for up to 4 hours. The time switch shall be capable of programming different schedules for weekdays and weekends and have program backup capabilities that prevent the loss of the device's program and time setting for at least 10 hours if power is interrupted; or

1B. An occupancy sensor to control the operating period of the system; or

1C. A 4-hour timer that can be manually operated to control the operating period of the system.

2. Each space conditioning system shall be installed with controls that temporarily restart and temporarily operate the system as required to maintain a setback heating and/or a setup cooling thermostat setpoint.

§122(g): Each space conditioning system serving multiple zones with a combined conditioned floor area more than 25,000 square feet shall be provided with isolation zones. Each zone: shall not exceed 25,000 square feet; shall be provided with isolation devices, such as valves or dampers that allow the supply of heating or cooling to be setback or shut off independently of other isolation areas; and shall be controlled by a time control device as described above.

§122(c): Thermostats shall have numeric setpoints in degrees Fahrenheit (F) and adjustable setpoint stops accessible only to authorized personnel.

§122(b): Heat pumps shall be installed with controls to prevent electric resistance supplementary heater operation when the heating load can be met by the heat pump alone

§122(a&b): Each space conditioning system shall be controlled by an individual thermostat that responds to temperature within the zone. Where used to control heating, the control shall be adjustable down to 55 degrees F or lower. For cooling, the control shall be adjustable up to 85 degrees F or higher. Where used for both heating and cooling, the control shall be capable of providing a deadband of at least 5 degrees F within which the supply of heating and cooling is shut off or reduced to a minimum.

### Ventilation

§121(e): Controls shall be provided to allow outside air dampers or devices to be operated at the ventilation rates as specified on these plans.

§122(f): All gravity ventilating systems shall be provided with automatic or readily accessible manually operated dampers in all openings to the outside, except for combustion air openings.

§121(f): Ventilation System Acceptance. Before an occupancy permit is granted for a newly constructed building or space, or a new ventilating system serving a building or space is operated for normal use, all ventilation systems serving the building or space shall be certified as meeting the Acceptance Requirements for Code Compliance

### Service Water Heating Systems

§113(c) Installation

3. Temperature controls for public lavatories. The controls shall limit the outlet Temperature to 110°F.

2. Circulating service water-heating systems shall have a control capable of automatically turning off the circulating pump when hot water is not required.

EnergyPro 5.1 by EnergySoft User Number: 1006 RunCode: 2011-07-18T14:54:46 ID: 0602TAC Page 37 of 37

APPROVED
City of San Jose, Building Division
☐ Building ☐ Plumbing/Mechanical
☐ Electrical ☐ Zoning
GARY VAN WEGEN (408) 277-8185
Plan No. _____ Date: _____

VMI architecture
Design · Planning · Interiors
637 5th Avenue San Rafael, CA 94901
415-451-2500 415-451-2595 fax
www.vmarch.com

VMI JOB NUMBER
Y1022

LICENSED ARCHITECT HUGH EDWARD MARCH No. C17928 Exp. 10/31/12 STATE OF CALIFORNIA

RECORD DATES

| | |
|---|---|
| DD SUBMITTAL | 10-21-10 |
| BLDG. SUBMITTAL | 5-10-11 |
| BID SET | - |
| CONTRACT SET | - |

REVISIONS

2 08/24/11 PC Comments/ Plan Updates

CLIENT
TACO BELL CORP
1 GLEN BELL WAY, MD# 534
IRVINE, CA 92618

SITE #286119

PROJECT
TACO BELL
840 S. Bascom Avenue
San Jose, CA 95128-2605
APN #282-42-038

TY07_AUG09P

2

TITLE 24 CALCULATIONS

M5.1

PERMIT FILE # CP10-060

Printed on Recycled Paper at American Draft Source