Sprint

TM

TO OBTAIN LOCATION OF PARTICIPANTS UNDERGROUND FACILITIES BEFORE YOU DIG IN CALIFORNIA (SOUTH), CALL DIG ALERT
TOLL FREE: 1-800-227-2600 OR
www.digalert.org
CALIFORNIA STATUTE REQUIRES MIN OF 2 WORKING DAYS NOTICE BEFORE YOU EXCAVATE

Know what's **below.**
Call before you dig.

CITY OF SAN JOSE BUILDING DIVISION
APPROVED PLAN SET
☐ OFFICE SET ☐ FIELD SET
ADDRESS 2445 FONTAINE RD
PERMIT No. 18-118733 DATE
P.C. No. DATE 7/12/18
CODE EDITIONS: CBC, CPC, CMC 2016 CEC 2016 ENERGY 2016
OCCUPANCY GROUP(S) U TYPE OF CONSTRUCTION IIB
PLANS APPROVED FOR: CHECKED BY APPROVED BY
( ) BUILDING NON-STRUCT MMA MMA
( ) BUILDING STRUCTURAL
( ) ELECTRICAL
( ) PLUMBING
( ) MECHANICAL
( ) ZONING PLANNING PERMIT#
COMMENTS

PROJECT NAME: DO MACRO UPGRADE
SITE NUMBER: SF52XC689
SITE NAME: CHUCK E CHEESE
SITE TYPE: ROOFTOP
SITE ADDRESS: 2445 FONTAINE RD. SAN JOSE, CA 95121
CA-SJC0224D

DRAWING INDEX

SHT	DRAWING INDEX	REV
T1	TITLE SHEET	1
SP-1	SPRINT SPECIFICATIONS	1
SP-2	SPRINT SPECIFICATIONS	1
A1	SITE PLAN	1
A2	ENLARGED SITE PLAN & EQUIPMENT PLAN	1
A3	ANTENNA PLANS & SCHEDULES	1
A4	SOUTHEAST ELEVATIONS	1
A5	WEST ELEVATIONS	1
D1	DETAILS	1
D2	DETAILS	1
D3	DETAILS	1
E1	ELECTRICAL AND GROUNDING NOTES	1
E2	SINGLE LINE DIAGRAM & PANEL SCHEDULE	1
E3	GROUNDING PLAN	1
E4	GROUNDING DETAILS	1

APPROVALS:

	PRINT NAME	SIGNATURE	DATE
SPRINT:			
VENDOR:			
RF ENGINEER:			
LEASING/LANDLORD:			
ZONING:			
CONSTRUCTION:			
POWER/TELCO:			
PG&E			

GENERAL CONTRACTOR NOTES

DO NOT SCALE DRAWINGS

SUBCONTRACTOR SHALL VERIFY ALL PLANS & EXISTING DIMENSIONS & CONDITIONS ON THE JOB SITE & SHALL IMMEDIATELY NOTIFY THE ENGINEER IN WRITING OF ANY DISCREPANCIES BEFORE PROCEEDING WITH THE WORK OR BE RESPONSIBLE FOR SAME.

VICINITY MAP

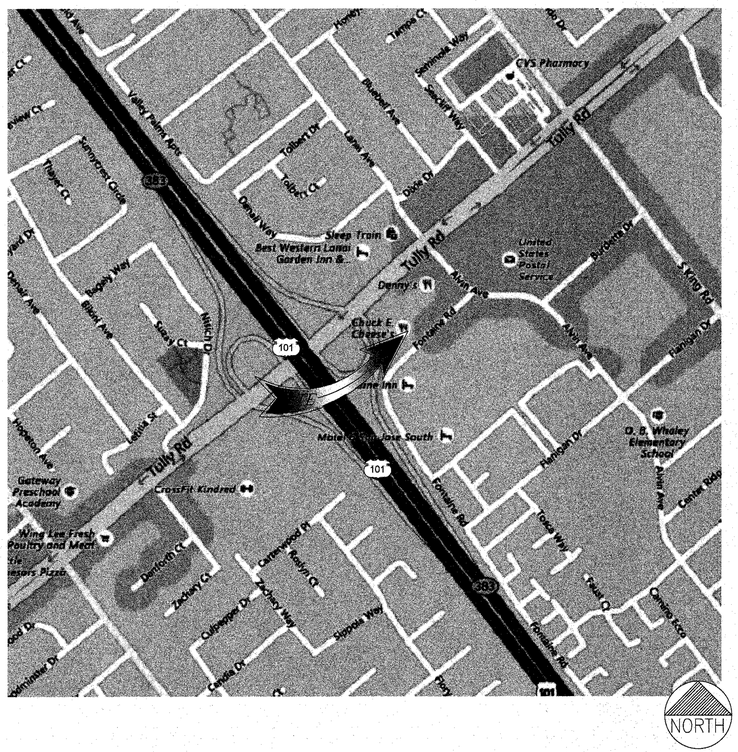

SCOPE OF WORK:

MODIFICATION OF AN EXISTING 'SPRINT' TELECOMMUNICATION FACILITY CONSISTING OF THE FOLLOWING:

- REPLACE (3) ANTENNAS WITH (6) ANTENNAS
- REPLACE (3) RRUS WITH (9) RRUS NEAR ANTENNAS
- INSTALL (2) (P) ELTEK RADIO CABINET ON (P) EQUIPMENT PAD ON ROOF
- INSTALL (1) (P) ELTEK BATTERY CABINET ON (P) EQUIPMENT PAD ON ROOF
- INSTALL (P) 100A PPC CABINET MOUNTED ON (P) H-FRAME

Site Address:	2445 FONTAINE ROAD SAN JOSE, CA 95121	Applicant/Lessee:	Sprint PCS 12657 Alcosta Blvd., Suite 300 San Ramon, CA 94583 contact: Tai Nguyen, PMP email: tai.x.nguyen@sprint.com Phone: (510) 209-4899
Property Owner/ Lessor:	NCA & ASSOCIATES 2445 FONTAINE ROAD SAN JOSE, CA 95121		
Contact Information:	TOM ROSE (408) 307-7673	Construction Manager:	Sprint PCS 12657 Alcosta Blvd., Suite 300 San Ramon, CA 94583 contact: Tai Nguyen, PMP email: Tai.x.Nguyen@sprint.com Phone: (510) 209.4899
Zoning:	IL-2-1 (INDUSTIRAL-LIGHT)		
Jurisdiction:	CITY OF SAN JOSE		
Latitude:	39° 19' 7.28" N (NAD 83)	Project Manager:	J5 Infrastructure Partners, Inc. 1150 Ballena Blvd. Suite 259 Alameda, CA 94501 contact: Michael Baxter email: mbaxter@j5ip.com cell: (925) 338.4179
Longitude:	-121° 49' 45.87" W (NAD 83)		
APN:	670-01-035		
Current Use:	COMMERCIAL/INDUSTRIAL COMPLEX, WITH COLOCATED TELECOMMUNICATION FACILITIES	Engineer:	J5 Infrastructure Partners, Inc. 2030 Main Street, Suite 200 Irvine, CA 92614 contact: Michael Leeper, P.E. email: mleeper@j5ip.com cell: (760) 809-4714
Proposed Use:	NO CHANGE		
Accessibility Requirements:	THE FACILITY IS UNMANNED AND NOT FOR CONTINUOUS HUMAN HABITATION. DISABLED/CHALLENGED ACCESS IS NOT REQUIRED PER CBC 2016, SECTION 11B-203.4 (LIMITED ACCESS SPACE)	A&E Manager:	J5 Infrastructure Partners, Inc. 2030 Main Street, Suite 200 Irvine, CA 92614 contact: Manuel Manahan email: mmanahan@j5ip.com Phone: (949) 247.7767 ext 187

CODE COMPLIANCE

PER CALIFORNIA BUILDING STANDARDS CODE, "TITLE 24 OF THE CALIFORNIA CODE OF REGULATIONS" GOVERNS THE DESIGN AND CONSTRUCTION OF ALL BUILDING OCCUPANCIES AND ASSOCIATED FACILITIES AND EQUIPMENT THROUGHOUT CALIFORNIA. RELEVANT CODE SECTIONS ARE (BUT NOT LIMITED TO):

1) 2016 CALIFORNIA ADMINISTRATIVE CODE
2) 2016 CALIFORNIA BUILDING CODE (CBC), BASED ON THE 2015 IBC
3) 2016 CALIFORNIA RESIDENTIAL CODE (CRC), BASED ON THE 2015 IRC
4) 2016 CALIFORNIA ELECTRICAL CODE (CEC), BASED ON THE 2014 NEC
5) 2016 CALIFORNIA MECHANICAL CODE (CMC), BASED ON THE 2015 UMC
6) 2016 CALIFORNIA PLUMBING CODE (CPC), BASED ON THE 2015 UPC
7) 2016 CALIFORNIA ENERGY CODE (CEC)
8) 2016 CALIFORNIA HISTORICAL BUILDING CODE
9) 2016 CALIFORNIA FIRE CODE (CFC), BASED ON THE 2015 IFC
10) 2016 CALIFORNIA EXISTING BUILDING CODE
11) 2016 CALIFORNIA GREEN BUILDINGS STANDARDS CODE (CALGREEN)
12) 2016 CALIFORNIA REFERENCED STANDARDS CODE
13) ANSI / EIA-TIA-222-G
14) 2015 NFPA 101, LIFE SAFETY CODE
15) 2016 NFPA 72, NATIONAL FIRE ALARM CODE
16) 2016 NFPA 13, FIRE SPRINKLER CODE

STATEMENTS

STRUCTURAL: STRUCTURAL ANALYSIS IS NOT WITHIN THE SCOPE OF WORK CONTAINED IN THIS DRAWINGS SET. FOR ANALYSIS OF EXISTING AND/OR PROPOSED COMPONENTS, REFER TO STRUCTURAL ANALYSIS PROVIDED UNDER SEPARATE COVER.

ANTENNA MOUNT ANALYSIS IS NOT WITHIN THE SCOPE OF WORK CONTAINED IN THIS DRAWING SET. FOR ANALYSIS OF ANTENNA MOUNT TO SUPPORT EXISTING AND /OR PROPOSED COMPONENTS. REFER TO ANTENNA MOUNT STRUCTURAL ANALYSIS PROVIDED UNDER SEPARATE COVER.

PROPRIETARY INFORMATION: THE INFORMATION CONTAINED WITHIN THIS SET OF DRAWINGS IS PROPRIETARY SPRINT. ANY USE OR DISCLOSURE OTHER THAN AS IT RELATES TO SPRINT IS STRICTLY PROHIBITED.

APPROVED
City of San Jose, Building Division
☐ Building ☐ Plumbing/Mechanical
☐ Electrical ☐ Zoning
Marc Garcia (408) 535-7895
Plan No.

Sprint
6580 Sprint Parkway
Overland Park, Kansas 66251

THE INFORMATION CONTAINED IN THIS SET OF DRAWINGS IS PROPRIETARY & CONFIDENTIAL TO SPRINT. ANY USE OR DISCLOSURE OTHER THAN AS IT RELATES TO SPRINT IS STRICTLY PROHIBITED

J5 INFRASTRUCTURE PARTNERS
AZ - CA - CO - ID - NM - NV - TX - UT
2030 MAIN STREET, SUITE 200
IRVINE, CA 92614

SITE NUMBER:
SF52XC689
SITE NAME:
CHUCK E CHEESE

2445 FONTAINE RD.
SAN JOSE, CA 95121

REV	DATE	DESCRIPTION	
1	06/19/18	1ST ROUND PCC	MM3
0	05/01/18	100% CONSTRUCTION	MM3

REGISTERED PROFESSIONAL ENGINEER
MICHAEL B. LEEPER
No. C 83930
CIVIL
STATE OF CALIFORNIA

IT IS A VIOLATION OF LAW FOR ANY PERSON, UNLESS THEY ARE ACTING UNDER THE DIRECTION OF A LICENSED PROFESSIONAL ENGINEER, TO ALTER THIS DOCUMENT.

SHEET TITLE
TITLE SHEET

SHEET NUMBER
T1

BE 18-126392

PC18-118733 OFFICE

THESE OUTLINE SPECIFICATIONS IN CONJUNCTION WITH THE SPRINT STANDARD CONSTRUCTION SPECIFICATIONS, INCLUDING CONTRACT DOCUMENTS AND THE CONSTRUCTION DRAWINGS DESCRIBE THE WORK TO BE PERFORMED BY THE CONTRACTOR.

CONTRACTOR SUPPLIED:
SUPPLIER WILL SUPPLY ALL MINOR MATERIALS NECESSARY FOR PERFORMANCE OF SERVICES. MINOR MATERIALS INCLUDE, BUT ARE NOT LIMITED TO, THE FOLLOWING ("MINOR MATERIALS"):

A. CONDUIT IN LENGTHS LESS THAN OR EQUAL TO 5 FEET
B. WIRE
C. BREAKERS
D. GROUNDING CABLE
E. ANTENNA AND LINE INSTALLATION HARDWARE
F. CONDUIT CLAMPS
G. CONDUIT CONNECTORS
H. WEATHERPROOFING MATERIALS
I. GROUNDING KITS
J. HOISTING GRIPS
K. SNAP-IN HANGERS WITH GROMMETS
L. BUTTERFLY HANGER KITS
M. COAX BLOCKS AND HARDWARE
N. ANGLE ADAPTERS, U BOLTS, AND OTHER MISCELLANEOUS HARDWARE
O. CROSSOVER PLATES
P. RET CABLES
Q. PIPE MOUNTS, PIPE TO PIPE MOUNTS
R. ICE BRIDGES IN LENGTHS LESS THAN OR EQUAL TO 5 FEET
S. LIQUID TIGHT
T. COMMON CONSUMABLES, INCLUDING BUT NOT LIMITED TO TAPES, SOLVENTS, ADHESIVES, LUGS, NUTS, BOLTS, WASHERS, ETC.
U. SUCH OTHER MINOR MATERIALS NOT SPECIFICALLY MENTIONED IN THIS SECTION BUT WHICH ARE REASONABLE NECESSARY TO COMPLETE THE SERVICES.

SPRINT SUPPLIED:

A. BBUS
B. BATTERY CABINETS
C. MMBTS CABINETS
D. RRUS
E. RETS
F. ANTENNAS AND BRACKETS
G. HFCS
H. BATTERIES
I. JUMPERS
J. ANY OEM SPECIFIC EQUIPMENT(CARD, SHELF, OR CABINET) THAT NEEDS TO BE INSTALLED IN OR NEXT TO MMBTS.

SECTION 01 100 - SCOPE OF WORK

THE WORK:
SHALL COMPLY WITH APPLICABLE NATIONAL CODES AND STANDARDS, LATEST EDITION, AND PORTIONS THEREOF.

PRECEDENCE:
SHOULD CONFLICTS OCCUR BETWEEN THE STANDARD CONSTRUCTION SPECIFICATIONS FOR WIRELESS SITES INCLUDING THE STANDARD CONSTRUCTION DETAILS FOR WIRELESS SITES AND THE CONSTRUCTION DRAWINGS, INFORMATION ON THE CONSTRUCTION DRAWINGS SHALL TAKE PRECEDENCE.

SITE FAMILIARITY:
CONTRACTOR SHALL BE RESPONSIBLE FOR FAMILIARIZING HIMSELF WITH ALL CONTRACT DOCUMENTS, FIELD CONDITIONS AND DIMENSIONS PRIOR TO PROCEEDING WITH CONSTRUCTION.

ON-SITE SUPERVISION:
THE CONTRACTOR SHALL SUPERVISE AND DIRECT THE WORK AND SHALL BE RESPONSIBLE FOR CONSTRUCTION MEANS, METHODS, TECHNIQUES, SEQUENCES, AND PROCEDURES IN ACCORDANCE WITH THE CONTRACT DOCUMENTS.

DRAWINGS, SPECIFICATIONS AND DETAILS REQUIRED AT JOBSITE:
THE CONSTRUCTION CONTRACTOR SHALL MAINTAIN A FULL SET OF THE CONSTRUCTION DRAWINGS AT THE JOBSITE FROM MOBILIZATION THROUGH CONSTRUCTION COMPLETION.

A. DETAILS ARE INTENDED TO SHOW DESIGN INTENT. PROVIDE ALL MATERIALS AND LABOR AS REQUIRED TO PROVIDE A COMPLETE AND FUNCTIONING SYSTEM. MODIFICATIONS MAY BE REQUIRED TO SUIT JOB DIMENSIONS OR CONDITIONS, AND SUCH MODIFICATIONS SHALL BE INCLUDED AS PART OF THE WORK.
B. CONTRACTOR SHALL NOTIFY SPRINT CONSTRUCTION MANAGER OF ANY VARIATIONS PRIOR TO PROCEEDING WITH THE WORK.DIMENSIONS SHOWN ARE TO FINISH SURFACES UNLESS NOTED OTHERWISE. MODIFICATIONS MAY BE REQUIRED TO SUIT JOB DIMENSIONS OR CONDITIONS, AND SUCH MODIFICATIONS SHALL BE INCLUDED AS PART OF THE WORK.
C. MARK THE FIELD SET OF DRAWINGS IN RED, DOCUMENTING ANY CHANGES FROM THE CONSTRUCTION DOCUMENTS.

METHODS OF PROCEDURE (MOPS) FOR CONSTRUCTION:
CONTRACTOR SHALL PERFORM WORK AS DESCRIBED IN THE FOLLOWING INSTALLATION AND COMMISSIONING MOPS.

A. TOP HAT
B. HOW TO INSTALL A NEW CABINET
C. BASE BAND UNIT IN EXISTING UNIT
D. INSTALLATION OF BATTERIES
E. INSTALLATION OF HYBRID CABLE
F. INSTALLATION OF RRU'S
G. CABLING
H. TS-0200 REV 4 - ANTENNA LINE ACCEPTANCE STANDARDS
I. SPRINT CELL SITE ENGINEERING NOTICE - EN 2012-001, REV 1.
J. COMMISSIONING MOPS

SECTION 01 200 - COMPANY FURNISHED MATERIAL AND EQUIPMENT

COMPANY FURNISHED MATERIAL AND EQUIPMENT IS IDENTIFIED ON THE RF DATA SHEET IN THE CONSTRUCTION DRAWINGS.

CONTRACTOR IS RESPONSIBLE FOR SPRINT PROVIDED MATERIAL AND EQUIPMENT TO ENSURE IT IS PROTECTED AND HANDLED PROPERLY THROUGHOUT THE CONSTRUCTION DURATION.

CONTRACTOR RESPONSIBLE FOR RECEIPT OF SPRINT FURNISHED EQUIPMENT AT CELL SITE OR CONTRACTORS LOCATION. CONTRACTOR TO COMPLETE SHIPPING AND RECEIPT DOCUMENTATION IN ACCORDANCE WITH COMPANY PRACTICE.

SECTION 01 300 - CELL SITE CONSTRUCTION

NOTICE TO PROCEED:
NO WORK SHALL COMMENCE PRIOR TO COMPANY'S WRITTEN NOTICE TO PROCEED AND THE ISSUANCE OF WORK ORDER.

SITE CLEANLINESS:
CONTRACTOR SHALL KEEP THE SITE FREE FROM ACCUMULATING WASTE MATERIAL, DEBRIS, AND TRASH. AT THE COMPLETION OF THE WORK, CONTRACTOR SHALL REMOVE FROM THE SITE ALL REMAINING RUBBISH, IMPLEMENTS, TEMPORARY FACILITIES, AND SURPLUS MATERIALS.

SECTION 01 400 - SUBMITTALS & TESTS

ALTERNATES:
AT THE COMPANY'S REQUEST, ANY ALTERNATIVES TO THE MATERIALS OR METHODS SPECIFIED SHALL BE SUBMITTED TO SPRINTS CONSTRUCTION MANAGER FOR APPROVAL. SPRINT WILL REVIEW AND APPROVE ONLY THOSE REQUESTS MADE IN WRITING. NO VERBAL APPROVALS WILL BE CONSIDERED.

TESTS AND INSPECTIONS:

A. THE CONTRACTOR SHALL BE RESPONSIBLE FOR ALL CONSTRUCTION TESTS, INSPECTIONS AND PROJECT DOCUMENTATION.

B. CONTRACTOR SHALL ACCOMPLISH TESTING INCLUDING BUT NOT LIMITED TO THE FOLLOWING:

1. COAX SWEEPS AND FIBER TESTS PER TS-0200 REV 4 ANTENNA LINE ACCEPTANCE STANDARDS.
2. AGL, AZIMUTH AND DOWNTILT PROVIDE AN AUTOMATED REPORT UPLOADED TO SITERRA USING A COMMERCIAL MADE-FOR THE PURPOSE ELECTRONIC ANTENNA ALIGNMENT TOOL (AAT). INSTALLED AZIMUTH, CENTERLINE AND DOWNTILT MUST CONFORM WITH RF CONFIGURATION DATA
3. CONTRACTOR SHALL BE RESPONSIBLE FOR ANY AND ALL CORRECTIONS TO ANY WORK IDENTIFIED AS UNACCEPTABLE IN SITE INSPECTION ACTIVITIES AND/OR AS A RESULT OF TESTING.
4. ALL TESTING REQUIRED BY APPLICABLE INSTALLATION MOPS.

C. REQUIRED CLOSEOUT DOCUMENTATION INCLUDES, BUT IS NOT LIMITED TO THE FOLLOWING:

1. AZIMUTH, DOWNTILT, AGL FROM SUNSIGHT INSTRUMENTS - ANTENNALIGN ALIGNMENT TOOL (AAT)
2. SWEEP AND FIBER TESTS
3. SCANABLE BARCODE PHOTOGRAPHS OF TOWER TOP AND INACCESSIBLE SERIALIZED EQUIPMENT
4. ALL AVAILABLE JURISDICTIONAL INFORMATION
5. PDF SCAN OF REDLINES PRODUCED IN FIELD
6. A PDF SCAN OF REDLINE MARK-UPS SUITABLE FOR USE IN ELECTRONIC AS-BUILT DRAWING PRODUCTION
7. LIEN WAIVERS
8. FINAL PAYMENT APPLICATION
9. REQUIRED FINAL CONSTRUCTION PHOTOS
10. CONSTRUCTION AND COMMISSIONING CHECKLIST COMPLETE WITH NO DEFICIENT ITEMS
11. ALL POST NTP TASKS INCLUDING DOCUMENT UPLOADS COMPLETED IN SITERRA (SPRINTS DOCUMENT REPOSITORY OF RECORD).
12. CLOSEOUT PHOTOGRAPHS:
    a PROVIDE PHOTOGRAPHS OF FINAL PROJECT PER THE FOLLOWING LIST. ADDITIONAL PHOTOGRAPHS MAY BE REQUIRED TO SUPPORT ACCEPTANCE PROCESSES
    (i) MAIN HYBRID CABLE ROUTE (MINIMUM TWO PHOTOS)
    (ii) PHOTOS OF EACH ANTENNA AND RRU
    (iii) MANUFACTURERS NAME TAG FOR ALL SERIALIZED EQUIPMENT
    (iv) PULL AND DISTRIBUTION BOXES INTERMEDIATE BETWEEN RRU'S AND MMBS (DOOR OPEN)
    (v) MMBS CABINET WITH DOOR OPEN SHOWING MODIFICATIONS
    (vi) POWER CABINET, DOORS OPEN, BATTERIES INSTALLED
    (vii) BREAK OUT CYLINDERS
    (viii) ASR SIGNAGE FOR SPRINT OWNED TOWERS
    (ix) RADIATION EXPOSURE WARNING SIGNS
    (x) PHOTOGRAPH FROM EACH SECTOR FROM APPROXIMATELY RAD CENTER OF ANY NEW ANTENNA AT HORIZON.
    b LOAD PHOTOS TO SITERRA PROJECT LIBRARY I5. IN I5 CREATE NEW CATEGORY; 2.5 DEPLOYMENT, AND SECTION; PERMANENT CONSTRUCTION. LABEL PHOTOS WITH SITE CASCADE AND VIEW BEING DEPICTED. CAMERAS USED TO TAKE PHOTOGRAPHS SHALL GPS ENABLED SUCH THAT THE GPS COORDINATES ARE INCLUDED IN THE PHOTO MEDIA-FILE INFORMATION.

COMMISSIONING:
PERFORM ALL COMMISSIONING AS REQUIRED BY APPLICABLE MOPS

INTEGRATION:
PERFORM ALL INTEGRATION ACTIVITIES AS REQUIRED BY APPLICABLE MOPS

SECTION 07 500 - ROOF CUTTING, PATCHING AND REPAIR

SUMMARY:
THIS SECTION SPECIFIES CUTTING AND PATCHING EXISTING ROOFING SYSTEMS WHERE CONDUIT OR CABLES EXIT THE BUILDING ONTO THE ROOF OR BUILDING-MOUNTED ANTENNAS, AND AS REQUIRED FOR WATERTIGHT PERFORMANCE. ROOFTOP ENTRY OPENINGS IN MEMBRANE ROOFTOPS SHALL BE CONSTRUCTED TO COMPLY WITH LANDLORD, ANY EXISTING WARRANTY, AND LOCAL JURISDICTIONAL STANDARDS.

1.4 SUBMITTALS:

A. PRE-CONSTRUCTION ROOF PHOTOS: COMPLETE A ROOF INSPECTION PRIOR TO THE INSTALLATION OF SPRINT EQUIPMENT ON ANY ROOFTOP BUILD. AT A MINIMUM INSPECT AND PHOTOGRAPH (MINIMUM 3 EA.) ALL AREAS IMPACTED BY THE ADDITION OF THE SPRINT EQUIPMENT.
B. PROVIDE SIMILAR PHOTOGRAPHS SHOWING ROOF CONDITIONS AFTER CONSTRUCTION (MINIMUM 3 EA.)
C. ROOF INSPECTION PHOTOGRAPHS SHOULD BE UPLOADED WITH CLOSEOUT PHOTOGRAPHS.

SECTION 09 900 - PAINTING

QUALITY ASSURANCE:

A. COMPLY WITH GOVERNING CODES AND REGULATIONS. PROVIDE PRODUCTS OF ACCEPTABLE MANUFACTURERS WHICH HAVE BEEN IN SATISFACTORY USE IN SIMILAR SERVICE FOR THREE YEARS. USE EXPERIENCED INSTALLERS. DELIVER, HANDLE, AND STORE MATERIALS IN ACCORDANCE WITH MANUFACTURER'S INSTRUCTIONS.
B. COMPLY WITH ALL ENVIRONMENTAL REGULATIONS FOR VOLATILE ORGANIC COMPOUNDS.

MATERIALS:

A. MANUFACTURERS: BENJAMIN MOORE, ICI DEVOE COATINGS, PPG, SHERWIN WILLIAMS OR APPROVED EQUAL. PROVIDE PREMIUM GRADE, PROFESSIONAL-QUALITY PRODUCTS FOR COATING SYSTEMS.

PAINT SCHEDULE:

A. EXTERIOR ANTENNAE AND ANTENNA MOUNTING HARDWARE: ONE COAT OF PRIMER AND TWO FINISH COATS. PAINT FOR ANTENNAE SHALL BE NON-METALLIC BASED AND CONTAIN NO METALLIC PARTICLES. PROVIDE COLORS AND PATTERNS AS REQUIRED TO MASK APPEARANCE OF ANTENNAE ON ADJACENT BUILDING SURFACES AND AS ACCEPTABLE TO THE OWNER. REFER TO ANTENNA MANUFACTURER'S INSTRUCTIONS WHENEVER POSSIBLE.
B. ROOF TOP CONSTRUCTION: TOUCH UP - PREPARE SURFACES TO BE REPAIRED. FOLLOW INDUSTRY STANDARDS AND REQUIREMENTS OF OWNER TO MATCH EXISTING COATING AND FINISH.

PAINTING APPLICATION:

A. INSPECT SURFACES, REPORT UNSATISFACTORY CONDITIONS IN WRITING; BEGINNING WORK MEANS ACCEPTANCE OF SUBSTRATE.
B. COMPLY WITH MANUFACTURER'S INSTRUCTIONS AND RECOMMENDATIONS FOR PREPARATION, PRIMING AND COATING WORK. COORDINATE WITH WORK OF OTHER SECTIONS.
C. MATCH APPROVED MOCK-UPS FOR COLOR, TEXTURE, AND PATTERN. RE-COAT OR REMOVE AND REPLACE WORK WHICH DOES NOT MATCH OR SHOWS LOSS OF ADHESION.
D. CLEAN UP, TOUCH UP AND PROTECT WORK.

TOUCHUP PAINTING:

A. GALVANIZING DAMAGE AND ALL BOLTS AND NUTS SHALL BE TOUCHED UP AFTER TOWER ERECTION WITH "GALVANOX," "DRY GALV," OR "ZINC-IT."
B. FIELD TOUCHUP PAINT SHALL BE DONE IN ACCORDANCE WITH THE MANUFACTURER'S WRITTEN INSTRUCTIONS.
C. ALL METAL COMPONENTS SHALL BE HANDLED WITH CARE TO PREVENT DAMAGE TO THE COMPONENTS, THEIR PRESERVATIVE TREATMENT, OR THEIR PROTECTIVE COATINGS.

SECTION 11 700 - ANTENNA ASSEMBLY, REMOTE RADIO UNITS AND CABLE INSTALLATION

SUMMARY:
THIS SECTION SPECIFIES INSTALLATION OF ANTENNAS, RRU'S, AND CABLE EQUIPMENT, INSTALLATION, AND TESTING OF COAXIAL FIBER CABLE.

ANTENNAS AND RRU'S:
THE NUMBER AND TYPE OF ANTENNAS AND RRU'S TO BE INSTALLED IS DETAILED ON THE CONSTRUCTION DRAWINGS.

HYBRID CABLE:
HYBRID CABLE WILL BE DC/FIBER AND FURNISHED FOR INSTALLATION AT EACH SITE. CABLE SHALL BE INSTALLED PER THE CONSTRUCTION DRAWINGS AND THE APPLICABLE MANUFACTURER'S REQUIREMENTS.

JUMPERS AND CONNECTORS:
FURNISH AND INSTALL 1/2" COAX JUMPER CABLES BETWEEN THE RRU'S AND ANTENNAS. JUMPERS SHALL BE TYPE LDF 4, FLC 12-50, CR 540, OR FXL 540. SUPER-FLEX CABLES ARE NOT ACCEPTABLE. JUMPERS BETWEEN THE RRU'S AND ANTENNAS OR TOWER TOP AMPLIFIERS SHALL CONSIST OF 1/2 INCH FOAM DIELECTRIC, OUTDOOR RATED COAXIAL CABLE. DO NOT USE SUPERFLEX OUTDOORS. JUMPERS SHALL BE FACTORY FABRICATED IN APPROPRIATE LENGTHS WITH A MAXIMUM OF 4 FEET EXCESS PER JUMPER AND HAVE CONNECTORS AT EACH END, MANUFACTURED BY SUPPLIER. IF JUMPERS ARE FIELD FABRICATED, FOLLOW MANUFACTURER'S REQUIREMENTS FOR INSTALLATION OF CONNECTORS

REMOTE ELECTRICAL TILT (RET) CABLES:

MISCELLANEOUS:
INSTALL SPLITTERS, COMBINERS, FILTERS PER RF DATA SHEET, FURNISHED BY SPRINT.

ANTENNA INSTALLATION:
THE CONTRACTOR SHALL ASSEMBLE ALL ANTENNAS ONSITE IN ACCORDANCE WITH THE INSTRUCTIONS SUPPLIED BY THE MANUFACTURER. ANTENNA HEIGHT, AZIMUTH, AND FEED ORIENTATION INFORMATION SHALL BE A DESIGNATED ON THE CONSTRUCTION DRAWINGS.

CONTINUE SHEET SP-2

Building Division
FOR REFERENCE ONLY
Not an approval
Plans shall be available for field inspector

Sprint
6580 Sprint Parkway
Overland Park, Kansas 66251

THE INFORMATION CONTAINED IN THIS SET OF DRAWINGS IS PROPRIETARY & CONFIDENTIAL TO SPRINT ANY USE OR DISCLOSURE OTHER THAN AS IT RELATES TO SPRINT IS STRICTLY PROHIBITED

J5 INFRASTRUCTURE PARTNERS
AZ - CA - CO - ID - NM - NV - TX - UT
2030 MAIN STREET, SUITE 200
IRVINE, CA 92614

SITE NUMBER:
SF52XC689
SITE NAME:
CHUCK E CHEESE

2445 FONTAINE RD.
SAN JOSE, CA 95121

REV	DATE	DESCRIPTION	
1	06/19/18	1ST ROUND PCC	MM3
0	05/01/18	100% CONSTRUCTION	MM3

REGISTERED PROFESSIONAL ENGINEER
MICHAEL B. LEEPER
No. C 83930
CIVIL
STATE OF CALIFORNIA

IT IS A VIOLATION OF LAW FOR ANY PERSON, UNLESS THEY ARE ACTING UNDER THE DIRECTION OF A LICENSED PROFESSIONAL ENGINEER, TO ALTER THIS DOCUMENT.

SHEET TITLE
SPRINT SPECIFICATIONS

SHEET NUMBER
SP-1

A. THE CONTRACTOR SHALL POSITION THE ANTENNA ON TOWER PIPE MOUNTS SO THAT THE BOTTOM STRUT IS LEVEL. THE PIPE MOUNTS SHALL BE PLUMB TO WITHIN 1 DEGREE.
B. ANTENNA MOUNTING REQUIREMENTS: PROVIDE ANTENNA MOUNTING HARDWARE AS INDICATED ON THE DRAWINGS.

HYBRID CABLES INSTALLATION:

A. THE CONTRACTOR SHALL ROUTE, TEST, AND INSTALL ALL CABLES AS INDICATED ON THE CONSTRUCTION DRAWINGS AND IN ACCORDANCE WITH THE MANUFACTURER'S RECOMMENDATIONS.
B. THE INSTALLED RADIUS OF THE CABLES SHALL NOT BE LESS THAN THE MANUFACTURER'S SPECIFICATIONS FOR BENDING RADII.
C. EXTREME CARE SHALL BE TAKEN TO AVOID DAMAGE TO THE CABLES DURING HANDLING AND INSTALLATION.

1. FASTENING MAIN HYBRID CABLES: ALL CABLES SHALL BE PERMANENTLY FASTENED TO THE COAX LADDER AT 4'-0" OC USING NON-MAGNETIC STAINLESS STEEL CLIPS.
2. FASTENING INDIVIDUAL FIBER AND DC CABLES ABOVE BREAKOUT ENCLOSURE (MEDUSA), WITHIN THE MMBS CABINET AND ANY INTERMEDIATE DISTRIBUTION BOXES:
   a. FIBER: SUPPORT FIBER BUNDLES USING ½" VELCRO STRAPS OF THE REQUIRED LENGTH @ 18" OC. STRAPS SHALL BE UV, OIL AND WATER RESISTANT AND SUITABLE FOR INDUSTRIAL INSTALLATIONS AS MANUFACTURED BY TEXTOL OR APPROVED EQUAL.
   b. DC: SUPPORT DC BUNDLES WITH ZIP TIES OF THE ADEQUATE LENGTH. ZIP TIES TO BE UV STABILIZED, BLACK NYLON, WITH TENSILE STRENGTH AT 12,000 PSI AS MANUFACTURED BY NELCO PRODUCTS OR EQUAL.
3. FASTENING JUMPERS: SECURE JUMPERS TO THE SIDE ARMS OR HEAD FRAMES USING STAINLESS STEEL TIE WRAPS OR STAINLESS STEEL BUTTERFLY CLIPS.
4. CABLE INSTALLATION:
   a. INSPECT CABLE PRIOR TO USE FOR SHIPPING DAMAGE, NOTIFY THE CONSTRUCTION MANAGER.
   b. CABLE ROUTING: CABLE INSTALLATION SHALL BE PLANNED TO ENSURE THAT THE LINES WILL BE PROPERLY ROUTED IN THE CABLE ENVELOP AS INDICATED ON THE DRAWINGS. AVOID TWISTING AND CROSSOVERS.
   c. HOIST CABLE USING PROPER HOISTING GRIPS. DO NOT EXCEED MANUFACTURES RECOMMENDED MAXIMUM BEND RADIUS.
5. GROUNDING OF TRANSMISSION LINES: ALL TRANSMISSION LINES SHALL BE GROUNDED AS INDICATED ON DRAWINGS.
6. HYBRID CABLE COLOR CODING: ALL COLOR CODING SHALL BE AS REQUIRED IN TS 0200 REV 4.
7. HYBRID CABLE LABELING: INDIVIDUAL HYBRID AND DC BUNDLES SHALL BE LABELED ALPHA-NUMERICALLY ACCORDING TO SPRINT CELL SITE ENGINEERING NOTICE - EN 2012-001, REV 1

WEATHERPROOFING EXTERIOR CONNECTORS AND HYBRID CABLE GROUND KITS:

A. ALL FIBER & COAX CONNECTORS AND GROUND KITS SHALL BE WEATHERPROOFED.
B. WEATHERPROOFED USING ONE OF THE FOLLOWING METHODS. ALL INSTALLATIONS MUST BE DONE IN ACCORDANCE WITH THE MANUFACTURER'S RECOMMENDATIONS AND INDUSTRY BEST PRACTICES.

1. COLD SHRINK: ENCOMPASS CONNECTOR IN COLD SHRINK TUBING AND PROVIDE A DOUBLE WRAP OF 2" ELECTRICAL TAPE EXTENDING 2" BEYOND TUBING. PROVIDE 3M COLD SHRINK CXS SERIES OR EQUAL.
2. SELF-AMALGAMATING TAPE: CLEAN SURFACES. APPLY A DOUBLE WRAP OF SELF-AMALGAMATING TAPE 2" BEYOND CONNECTOR. APPLY A SECOND WRAP OF SELF-AMALGAMATING TAPE IN OPPOSITE DIRECTION. APPLY DOUBLE WRAP OF 2" WIDE ELECTRICAL TAPE EXTENDING 2" BEYOND THE SELF-AMALGAMATING TAPE.
3. 3M SLIM LOCK CLOSURE 716: SUBSTITUTIONS WILL NOT BE ALLOWED.
4. OPEN FLAME ON JOB SITE IS NOT ACCEPTABLE

SECTION 11 800 - INSTALLATION OF MULTIMODAL BASE STATIONS (MMBS) AND RELATED EQUIPMENT

SUMMARY:

A. THIS SECTION SPECIFIES MMBS CABINETS, POWER CABINETS, AND INTERNAL EQUIPMENT INCLUDING BY NOT LIMITED TO RECTIFIERS, POWER DISTRIBUTION UNITS, BASE BAND UNITS, SURGE ARRESTORS, BATTERIES, AND SIMILAR EQUIPMENT FURNISHED BY THE COMPANY FOR INSTALLATION BY THE CONTRACTOR (OFCI).
B. CONTRACTOR SHALL PROVIDE AND INSTALL ALL MISCELLANEOUS MATERIALS AND PROVIDE ALL LABOR REQUIRED FOR INSTALLATION EQUIPMENT IN EXISTING CABINET OR NEW CABINET AS SHOWN ON DRAWINGS AND AS REQUIRE BY THE APPLICABLE INSTALLATION MOPS.
C. COMPLY WITH MANUFACTURERS INSTALLATION AND START-UP REQUIREMENTS

DC CIRCUIT BREAKER LABELING

A. LABEL CIRCUIT BREAKERS ACCORDING TO SPRINT CELL SITE ENGINEERING NOTICE - EN 2012-001, REV 1.

SUPPORTING DEVICES:

A. MANUFACTURED STRUCTURAL SUPPORT MATERIALS: SUBJECT TO COMPLIANCE WITH REQUIREMENTS, PROVIDE PRODUCTS BY THE FOLLOWING:
   1. ALLIED TUBE AND CONDUIT
   2. B-LINE SYSTEM
   3. SUNISTRUT DIVERSIFIED PRODUCTS
   4. THOMAS & BETTS
B. FASTENERS: TYPES, MATERIALS, AND CONSTRUCTION FEATURES AS FOLLOWS:
   1. EXPANSION ANCHORS: CARBON STEEL WEDGE OR SLEEVE TYPE.
   2. POWER-DRIVEN THREADED STUDS: HEAT-TREATED STEEL, DESIGNED SPECIFICALLY FOR THE INTENDED SERVICE.
   3. FASTEN BY MEANS OF WOOD SCREWS ON WOOD.
   4. TOGGLE BOLTS ON HOLLOW MASONRY UNITS.
   5. CONCRETE INSERTS OR EXPANSION BOLTS ON CONCRETE OR SOLID MASONRY.
   6. MACHINE SCREWS, WELDED THREADED STUDS, OR SPRING-TENSION CLAMPS ON STEEL.
   7. EXPLOSIVE DEVICES FOR ATTACHING HANGERS TO STRUCTURE SHALL NOT BE PERMITTED.
   8. DO NOT WELD CONDUIT, PIPE STRAPS, OR ITEMS OTHER THAN THREADED STUDS TO STEEL STRUCTURES.
   9. IN PARTITIONS OF LIGHT STEEL CONSTRUCTION, USE SHEET METAL SCREWS.

SUPPORTING DEVICES:

A. INSTALL SUPPORTING DEVICES TO FASTEN ELECTRICAL COMPONENTS SECURELY AND PERMANENTLY IN ACCORDANCE WITH NEC.
B. COORDINATE WITH THE BUILDING STRUCTURAL SYSTEM AND WITH OTHER TRADES.
C. UNLESS OTHERWISE INDICATED ON THE DRAWINGS, FASTEN ELECTRICAL ITEMS AND THEIR SUPPORTING HARDWARE SECURELY TO THE STRUCTURE IN ACCORDANCE WITH THE FOLLOWING:
D. ENSURE THAT THE LOAD APPLIED BY ANY FASTENER DOES NOT EXCEED 25 PERCENT OF THE PROOF TEST LOAD.
E. USE VIBRATION AND SHOCK-RESISTANT FASTENERS FOR ATTACHMENTS TO CONCRETE SLABS.

ELECTRICAL IDENTIFICATION:

A. UPDATE AND PROVIDE TYPED CIRCUIT BREAKER SCHEDULES IN THE MOUNTING BRACKET, INSIDE DOORS OF AC PANEL BOARDS WITH ANY CHANGES MADE TO THE AC SYSTEM.

B. BRANCH CIRCUITS FEEDING AVIATION OBSTRUCTION LIGHTING EQUIPMENT SHALL BE CLEARLY IDENTIFIED AS SUCH AT THE BRANCH CIRCUIT PANELBOARD.

SECTION 26 200 - ELECTRICAL MATERIALS AND EQUIPMENT CONDUIT:

A. RIGID GALVANIZED STEEL (RGS) CONDUIT SHALL BE USED FOR EXTERIOR LOCATIONS ABOVE GROUND AND IN UNFINISHED INTERIOR LOCATIONS AND FOR ENCASED RUNS IN CONCRETE. RIGID CONDUIT AND FITTINGS SHALL BE STEEL, COATED WITH ZINC EXTERIOR AND INTERIOR BY THE HOT DIP GALVANIZING PROCESS. CONDUIT SHALL BE PRODUCED TO ANSI SPECIFICATIONS C80.1, FEDERAL SPECIFICATION WW-C-581 AND SHALL BE LISTED WITH THE UNDERWRITERS' LABORATORIES. FITTINGS SHALL BE THREADED - SET SCREW OR COMPRESSION FITTINGS WILL NOT BE ACCEPTABLE. RGS CONDUITS SHALL BE MANUFACTURED BY ALLIED, REPUBLIC OR WHEATLAND.

B. UNDERGROUND CONDUIT IN CONCRETE SHALL BE POLYVINYLCHLORIDE (PVC) SUITABLE FOR DIRECT BURIAL AS APPLICABLE. JOINTS SHALL BE BELLED, AND FLUSH SOLVENT WELDED IN ACCORDANCE WITH MANUFACTURER'S INSTRUCTIONS. CONDUIT SHALL BE CARLON ELECTRICAL PRODUCTS OR APPROVED EQUAL.

C. TRANSITIONS BETWEEN PVC AND RIGID (RGS) SHALL BE MADE WITH PVC COATED METALLIC LONG SWEEP RADIUS ELBOWS.

D. EMT OR RIGID GALVANIZED STEEL CONDUIT MAY BE USED IN FINISHED SPACES CONCEALED IN WALLS AND CEILINGS. EMT SHALL BE MILD STEEL, ELECTRICALLY WELDED, ELECTRO-GALVANIZED OR HOT-DIPPED GALVANIZED AND PRODUCED TO ANSI SPECIFICATION C80.3, FEDERAL SPECIFICATION WW-C-563, AND SHALL BE UL LISTED. EMT SHALL BE MANUFACTURED BY ALLIED, REPUBLIC OR WHEATLAND, OR APPROVED EQUAL. FITTINGS SHALL BE METALLIC COMPRESSION. SET SCREW CONNECTIONS SHALL NOT BE ACCEPTABLE.
E. LIQUID TIGHT FLEXIBLE METALLIC CONDUIT SHALL BE USED FOR FINAL CONNECTION TO EQUIPMENT. FITTINGS SHALL BE METALLIC GLAND TYPE COMPRESSION FITTINGS, MAINTAINING THE INTEGRITY OF CONDUIT SYSTEM. SET SCREW CONNECTIONS SHALL NOT BE ACCEPTABLE. MAXIMUM LENGTH OF FLEXIBLE CONDUIT SHALL NOT EXCEED 6-FEET. LFMC SHALL BE PROTECTED AND SUPPORTED AS REQUIRE BY NEC. MANUFACTURERS OF FLEXIBLE CONDUITS SHALL BE CAROL, ANACONDA METAL HOSE OR UNIVERSAL METAL HOSE, OR APPROVED EQUAL.
F. MINIMUM SIZE CONDUIT SHALL BE 3/4 INCH (21MM).

HUBS AND BOXES:

A. AT ENTRANCES TO CABINETS OR OTHER EQUIPMENT NOT HAVING INTEGRAL THREADED HUBS PROVIDE METALLIC THREADED HUBS OF THE SIZE AND CONFIGURATION REQUIRED. HUB SHALL INCLUDE LOCKNUT AND NEOPRENE O-RING SEAL. PROVIDE IMPACT RESISTANT 105 DEGREE C PLASTIC BUSHINGS TO PROTECT CABLE INSULATION.

B. CABLE TERMINATION FITTINGS FOR CONDUIT
   1. CABLE TERMINATORS FOR RGS CONDUITS SHALL BE TYPE CRC BY O-Z/GEDNEY OR EQUAL.
   2. CABLE TERMINATORS FOR LFMC SHALL BE ETCO - CL2075; OR MADE FOR THE PURPOSE PRODUCTS BY ROXTEC.
C. EXTERIOR PULL BOXES AND PULL BOXES IN INTERIOR INDUSTRIAL AREAS SHALL BE PLATED CAST ALLOY, HEAVY DUTY, WEATHERPROOF, DUST PROOF, WITH GASKET, PLATED IRON ALLOY COVER AND STAINLESS STEEL COVER SCREWS, CROUSE-HINDS WAB SERIES OR EQUAL.
D. CONDUIT OUTLET BODIES SHALL BE PLATED CAST ALLOY WITH SIMILAR GASKETED COVERS. OUTLET BODIES SHALL BE OF THE CONFIGURATION AND SIZE SUITABLE FOR THE APPLICATION. PROVIDE CROUSE-HINDS FORM 8 OR EQUAL.
E. MANUFACTURER FOR BOXES AND COVERS SHALL BE HOFFMAN, SQUARE "D", CROUSE-HINDS, COOPER, ADALET, APPLETON, O-Z GEDNEY, RACO, OR APPROVED EQUAL.

SUPPLEMENTAL GROUNDING SYSTEM

A. FURNISH AND INSTALL A SUPPLEMENTAL GROUNDING SYSTEM AS INDICATED ON THE DRAWINGS. SUPPORT SYSTEM WITH NON-MAGNETIC STAINLESS STEEL CLIPS WITH RUBBER GROMMETS. GROUNDING CONNECTORS SHALL BE TINNED COPPER WIRE, SIZES AS INDICATED ON THE DRAWINGS. PROVIDE STRANDED BARE OR INSULATED CONDUCTORS AS INDICATED.
B. SUPPLEMENTAL GROUNDING SYSTEM: ALL CONNECTIONS TO BE MADE WITH CAD WELDS, EXCEPT AT EQUIPMENT USE LUGS OR OTHER AVAILABLE GROUNDING MEANS AS REQUIRED BY MANUFACTURER; AT GROUND BARS USE TWO HOLE SPADES WITH NO OX.
C. STOLEN GROUND-BARS: IN THE EVENT OF STOLEN GROUND BARS, CONTACT SPRINT CM FOR REPLACEMENT INSTRUCTION USING THREADED ROD KITS.

EXISTING STRUCTURE:

A. EXISTING EXPOSED WIRING AND ALL EXPOSED OUTLETS, RECEPTACLES, SWITCHES, DEVICES, BOXES, AND OTHER EQUIPMENT THAT ARE NOT TO BE UTILIZED IN THE COMPLETED PROJECT SHALL BE REMOVED OR DE-ENERGIZED AND CAPPED IN THE WALL, CEILING, OR FLOOR SO THAT THEY ARE CONCEALED AND SAFE. WALL, CEILING, OR FLOOR SHALL BE PATCHED TO MATCH THE ADJACENT CONSTRUCTION.

CONDUIT AND CONDUCTOR INSTALLATION:

A. CONDUITS SHALL BE FASTENED SECURELY IN PLACE WITH APPROVED NON-PERFORATED STRAPS AND HANGERS. EXPLOSIVE DEVICES FOR ATTACHING HANGERS TO STRUCTURE WILL NOT BE PERMITTED. CLOSELY FOLLOW THE LINES OF THE STRUCTURE, MAINTAIN CLOSE PROXIMITY TO THE STRUCTURE AND KEEP CONDUITS IN TIGHT ENVELOPES. CHANGES IN DIRECTION TO ROUTE AROUND OBSTACLES SHALL BE MADE WITH CONDUIT OUTLET BODIES. CONDUIT SHALL BE INSTALLED IN A NEAT AND WORKMANLIKE MANNER. PARALLEL AND PERPENDICULAR TO STRUCTURE WALL AND CEILING LINES. ALL CONDUIT SHALL BE FISHED TO CLEAR OBSTRUCTIONS. ENDS OF CONDUITS SHALL BE TEMPORARILY CAPPED TO PREVENT CONCRETE, PLASTER OR DIRT FROM ENTERING. CONDUITS SHALL BE RIGIDLY CLAMPED TO BOXES BY GALVANIZED MALLEABLE IRON BUSHING ON INSIDE AND GALVANIZED MALLEABLE IRON LOCKNUT ON OUTSIDE AND INSIDE.

B. CONDUCTORS SHALL BE PULLED IN ACCORDANCE WITH ACCEPTED GOOD PRACTICE.

SPRINT SUPPLIED MATERIALS:

A. BBUS
B. BATTERY CABINETS
C. MMBTS CABINETS
D. RRUS
E. RETS
F. ANTENNAS AND BRACKETS
G. HFCS
H. BATTERIES
I. JUMPERS
J. OEM SPECIFIC EQUIPMENT (CARD, SHELF, OR CABINET) THAT NEEDS TO BE INSTALLED IN OR NEXT TO MMBTS

CONTRACTOR SUPPLIED MATERIALS:

A. CONDUIT IN LENGTHS LESS THAN OR EQUAL TO 5 FEET
B. WIRE
C. BREAKERS
D. GROUNDING CABLE
E. ANTENNA AND LINE INSTALLATION HARDWARE
F. CONDUIT CLAMPS
G. CONDUIT CONNECTORS
H. WEATHERPROOFING MATERIALS
I. GROUNDING KITS
J. HOISTING GRIPS
K. SNAP-IN HANGERS WITH GROMMETS
L. BUTTERFLY HANGER KITS
M. COAX BLOCKS AND HARDWARE
N. ANGLE ADAPTERS, U BOLTS, AND OTHER MISCELLANEOUS HARDWARE
O. CROSSOVER PLATES
P. RET CABLES
Q. PIPE MOUNTS, PIPE TO PIPE MOUNTS
R. ICE BRIDGES IN LENGTHS LESS THAN OR EQUAL TO 5 FEET
S. LIQUID TIGHT
T. COMMON CONSUMABLES, INCLUDING BUT NOT LIMITED TO TAPES, SOLVENTS, ADHESIVES, LUGS, NUTS, BOLTS, WASHERS, ETC.
U. SUCH OTHER MINOR MATERIALS NOT SPECIFICALLY MENTIONED IN THIS SECTION BUT WHICH ARE REASONABLE NECESSARY TO COMPLETE THE SERVICES.

Building Division
FOR REFERENCE ONLY
Not an approval
Plans shall be available for field inspector

Sprint
6580 Sprint Parkway
Overland Park, Kansas 66251

THE INFORMATION CONTAINED IN THIS SET OF DRAWINGS IS PROPRIETARY & CONFIDENTIAL TO SPRINT. ANY USE OR DISCLOSURE OTHER THAN AS IT RELATES TO SPRINT IS STRICTLY PROHIBITED

J5 INFRASTRUCTURE PARTNERS
AZ - CA - CO - ID - NM - NV - TX - UT
2030 MAIN STREET, SUITE 200
IRVINE, CA 92614

SITE NUMBER:
SF52XC689
SITE NAME:
CHUCK E CHEESE

2445 FONTAINE RD.
SAN JOSE, CA 95121

REV	DATE	DESCRIPTION	
1	06/19/18	1ST ROUND PCC	MM3
0	05/01/18	100% CONSTRUCTION	MM3

REGISTERED PROFESSIONAL ENGINEER
MICHAEL J. LEEPER
No. C 83930
CIVIL
STATE OF CALIFORNIA

IT IS A VIOLATION OF LAW FOR ANY PERSON, UNLESS THEY ARE ACTING UNDER THE DIRECTION OF A LICENSED PROFESSIONAL ENGINEER, TO ALTER THIS DOCUMENT.

SHEET TITLE
SPRINT SPECIFICATIONS

SHEET NUMBER
SP-2

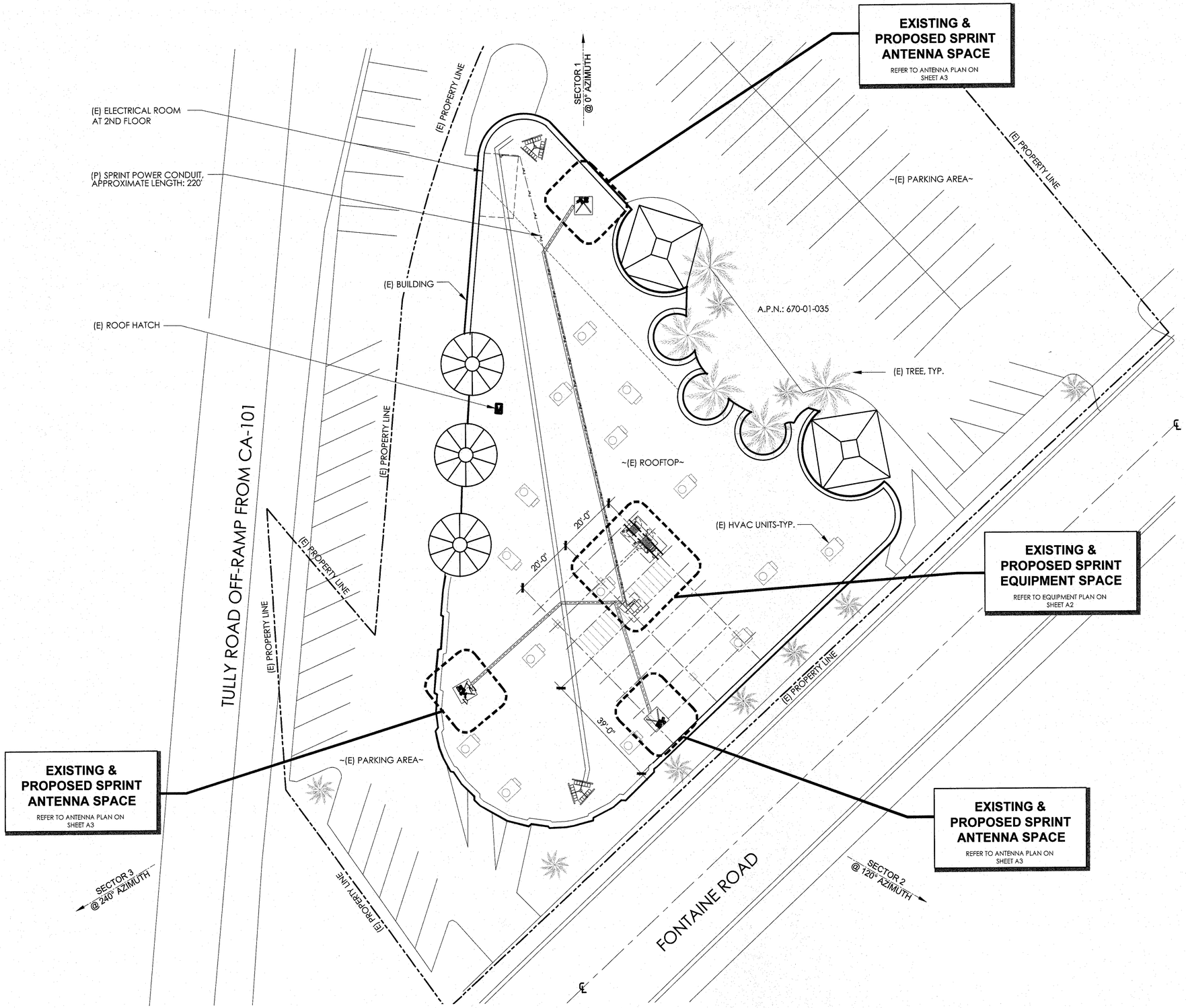

SITE PLAN

24"x36" SCALE: 1/16" = 1'-0"
11"x17" SCALE: 1/32" = 1'-0"
16' 12' 8' 4' 0' 16'

NORTH

1

Sprint

6580 Sprint Parkway
Overland Park, Kansas 66251

THE INFORMATION CONTAINED IN THIS SET OF DRAWINGS IS PROPRIETARY & CONFIDENTIAL TO SPRINT. ANY USE OR DISCLOSURE OTHER THAN AS IT RELATES TO SPRINT IS STRICTLY PROHIBITED

J5 INFRASTRUCTURE PARTNERS
AZ - CA - CO - ID - NM - NV - TX - UT
2030 MAIN STREET, SUITE 200
IRVINE, CA 92614

SITE NUMBER:
SF52XC689
SITE NAME:
CHUCK E CHEESE

2445 FONTAINE RD.
SAN JOSE, CA 95121

REV	DATE	DESCRIPTION	
1	06/19/18	1ST ROUND PCC	MM3
0	05/01/18	100% CONSTRUCTION	MM3

REGISTERED PROFESSIONAL ENGINEER
MICHAEL M. MAZER
No. C 83930
CIVIL
STATE OF CALIFORNIA

IT IS A VIOLATION OF LAW FOR ANY PERSON, UNLESS THEY ARE ACTING UNDER THE DIRECTION OF A LICENSED PROFESSIONAL ENGINEER, TO ALTER THIS DOCUMENT.

SHEET TITLE

SITE PLAN

SHEET NUMBER

A1

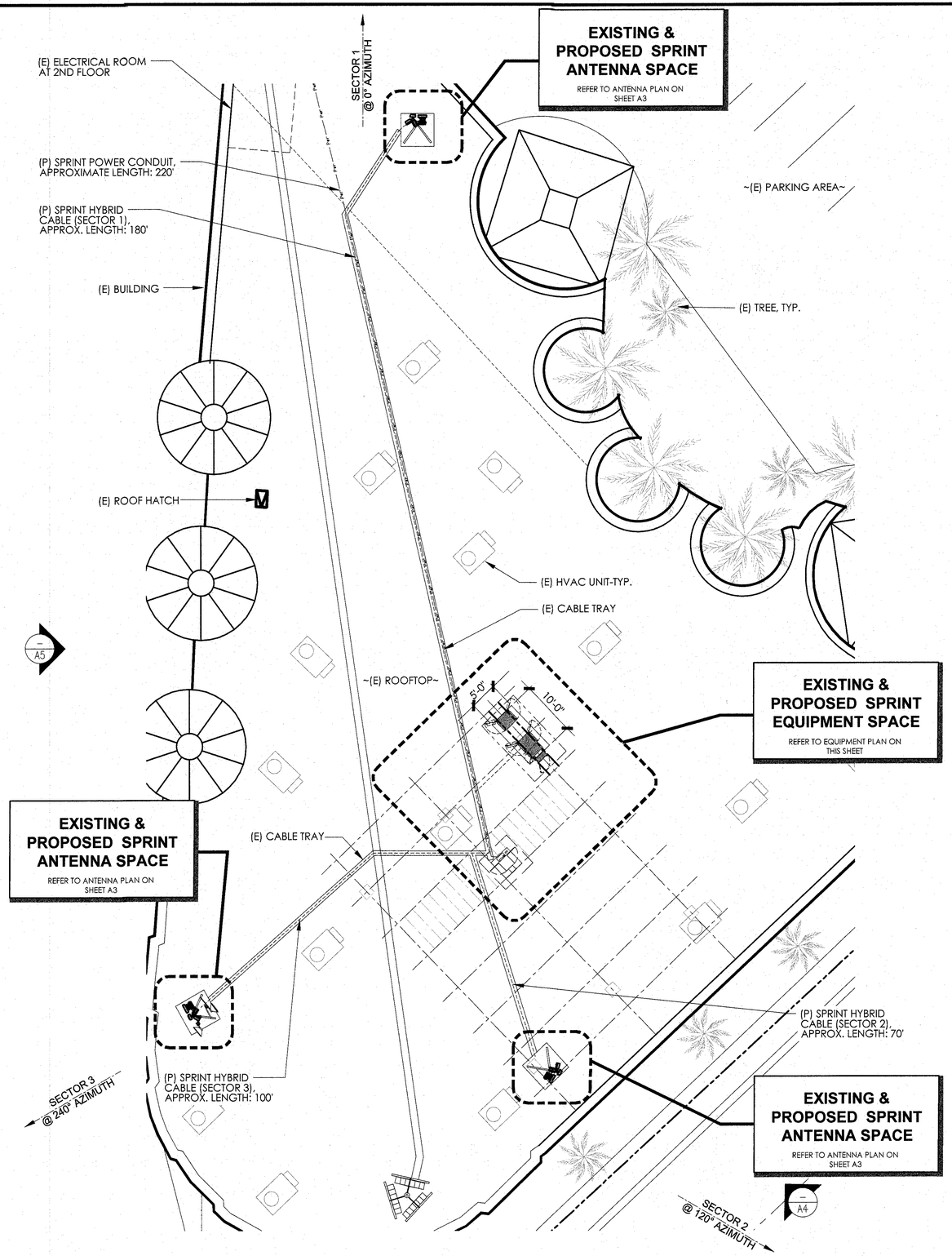

ENLARGED SITE PLAN

24"x36" SCALE: 3/32" = 1'-0"
11"x17" SCALE: 3/64" = 1'-0"
8' 4' 0" 8'
NORTH
1

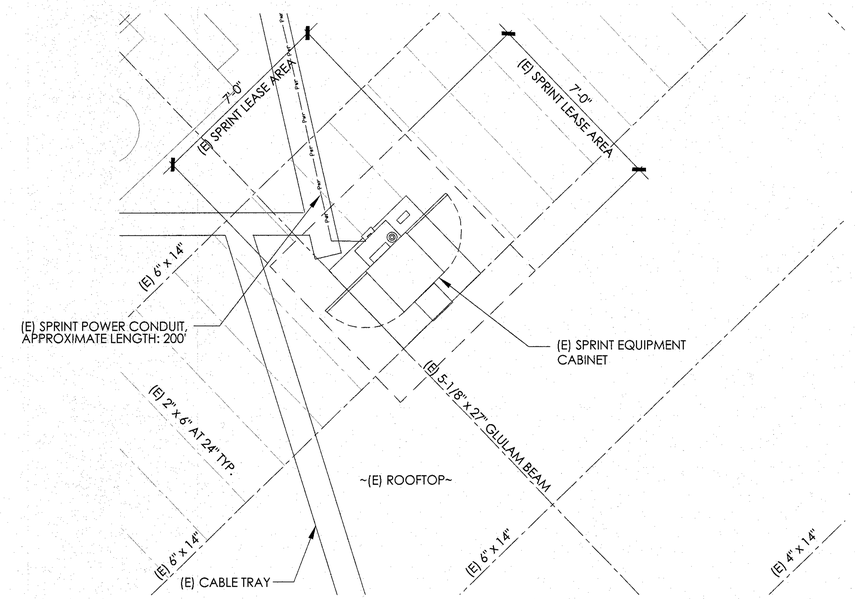

EXISTING EQUIPMENT PLAN

24"x36" SCALE: 3/8" = 1'-0"
11"x17" SCALE: 3/16" = 1'-0"
2' 1' 0" 2'
NORTH
2

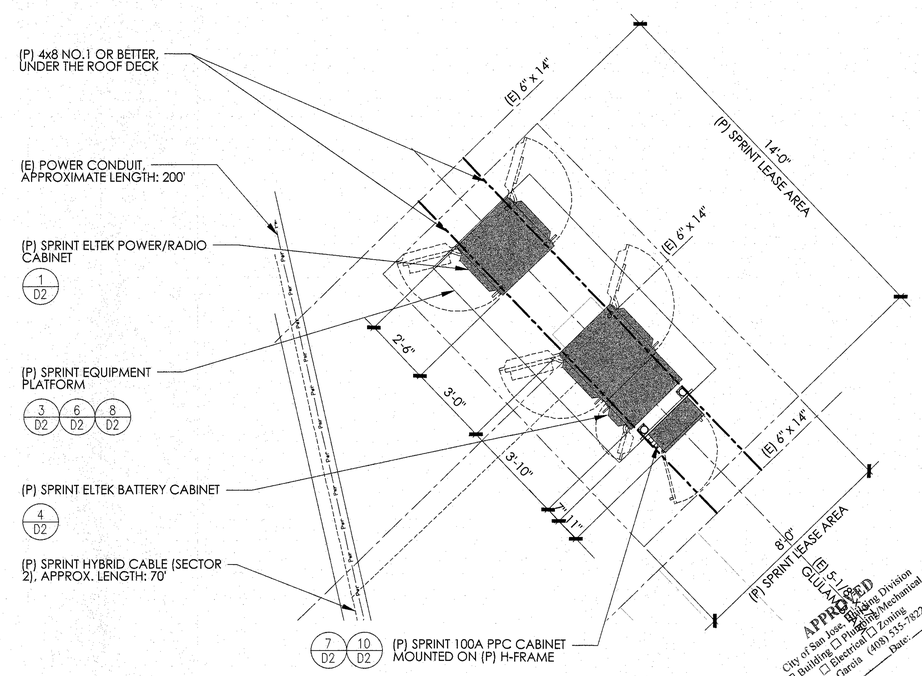

PROPOSED EQUIPMENT PLAN

24"x36" SCALE: 3/8" = 1'-0"
11"x17" SCALE: 3/16" = 1'-0"
2' 1' 0" 2'
NORTH
3

Sprint
6580 Sprint Parkway
Overland Park, Kansas 66251

THE INFORMATION CONTAINED IN THIS SET OF DRAWINGS IS PROPRIETARY & CONFIDENTIAL TO SPRINT. ANY USE OR DISCLOSURE OTHER THAN AS IT RELATES TO SPRINT IS STRICTLY PROHIBITED

INFRASTRUCTURE
AZ - CA - CO - ID - NM - NV - TX - UT
2030 MAIN STREET, SUITE 200
IRVINE, CA 92614

SITE NUMBER:
SF52XC689
SITE NAME:
CHUCK E CHEESE

2445 FONTAINE RD.
SAN JOSE, CA 95121

REV	DATE	DESCRIPTION	
1	06/19/18	1ST ROUND PCC	MM3
0	05/01/18	100% CONSTRUCTION	MM3

REGISTERED PROFESSIONAL ENGINEER
MICHAEL B. KEEFER
No. C 83930
CIVIL
STATE OF CALIFORNIA

IT IS A VIOLATION OF LAW FOR ANY PERSON, UNLESS THEY ARE ACTING UNDER THE DIRECTION OF A LICENSED PROFESSIONAL ENGINEER, TO ALTER THIS DOCUMENT.

SHEET TITLE
ENLARGED SITE PLAN & EQUIP PLAN

SHEET NUMBER
A2

PROPOSED ANTENNA SCHEDULE - OPTION 1AA

	ANTENNA	EXISTING TECHNOLOGY	PROPOSED TECHNOLOGY	ANTENNA MODEL		ANTENNA AZIMUTH		RAD CENTER	TRANSMISSION LINE	
				EXISTING	PROPOSED	EXISTING	PROPOSED		LENGTH	PART NUMBER
SECTOR 1	1	LTE 1900	LTE (2) 800/1900	KATHREIN 840 10054	KMW ET-X-TS-70-16-62-18-iR-RD	0°	0°	35'-6"	180'	(P) HYBRID CABLE
	2	-	LTE 2500	-	SAMSUNG FD-MIMO 64T64R	-	0°	35'-6"	180'	(P) HYBRID CABLE
SECTOR 2	1	LTE 1900	LTE (2) 800/1900	KATHREIN 840 10054	KMW ET-X-TS-70-16-62-18-iR-RD	120°	120°	35'-6"	70'	(P) HYBRID CABLE
	2	-	LTE 2500	-	SAMSUNG FD-MIMO 64T64R	-	120°	35'-6"	70'	(P) HYBRID CABLE
SECTOR 3	1	LTE 1900	LTE (2) 800/1900	KATHREIN 840 10054	KMW ET-X-TS-70-16-62-18-iR-RD	240°	240°	35'-6"	100'	(P) HYBRID CABLE
	2	-	LTE 2500	-	SAMSUNG FD-MIMO 64T64R	-	240°	35'-6"	100'	(P) HYBRID CABLE

NOTE:
(E) ANTENNA AZIMUTHS ARE ESTIMATED AND ARE TO BE VERIFIED BY RF.

NOTES TO CONTRACTOR:
1. CONTRACTOR IS TO REFER TO SPRINT'S MOST CURRENT RADIO FREQUENCY DATA SHEET (RFDS) PRIOR TO CONSTRUCTION
2. CABLE LENGTHS WERE DETERMINED BASED ON VISUAL INSPECTION DURING SITE-WALK. CONTRACTOR TO VERIFY ACTUAL LENGTH DURING PRE-CONSTRUCTION WALK
3. CONTRACTOR TO VERIFY PORTS HAVE SUFFICIENT ROOM

PROPOSED RRU SCHEDULE - OPTION 1AA

	SECTOR	EXISTING RRU TYPE	PROPOSED RRU TYPE	RRU LOCATION (DISTANCE FROM ANTENNA)	MINIMUM CLEARANCES		
					ABOVE	BELOW	SIDES
SECTOR 1	1	SPRINT RRUS	4T4R RRUS (1900)	±10'	16"	12"	8"
		-	4-PORT RRUS (800)	±10'			
	2	-	8T8R RRUS (2500)	±10'	16"	12"	8"
SECTOR 2	1	SPRINT RRUS	4T4R RRUS (1900)	±10'	16"	12"	8"
		-	4-PORT RRUS (800)	±10'			
	2	-	8T8R RRUS (2500)	±10'	16"	12"	8"
SECTOR 3	1	SPRINT RRUS	4T4R RRUS (1900)	±10'	16"	12"	8"
		-	4-PORT RRUS (800)	±10'			
	2	-	8T8R RRUS (2500)	±10'	16"	12"	8"

ANTENNA AND RRH SCHEDULE

3

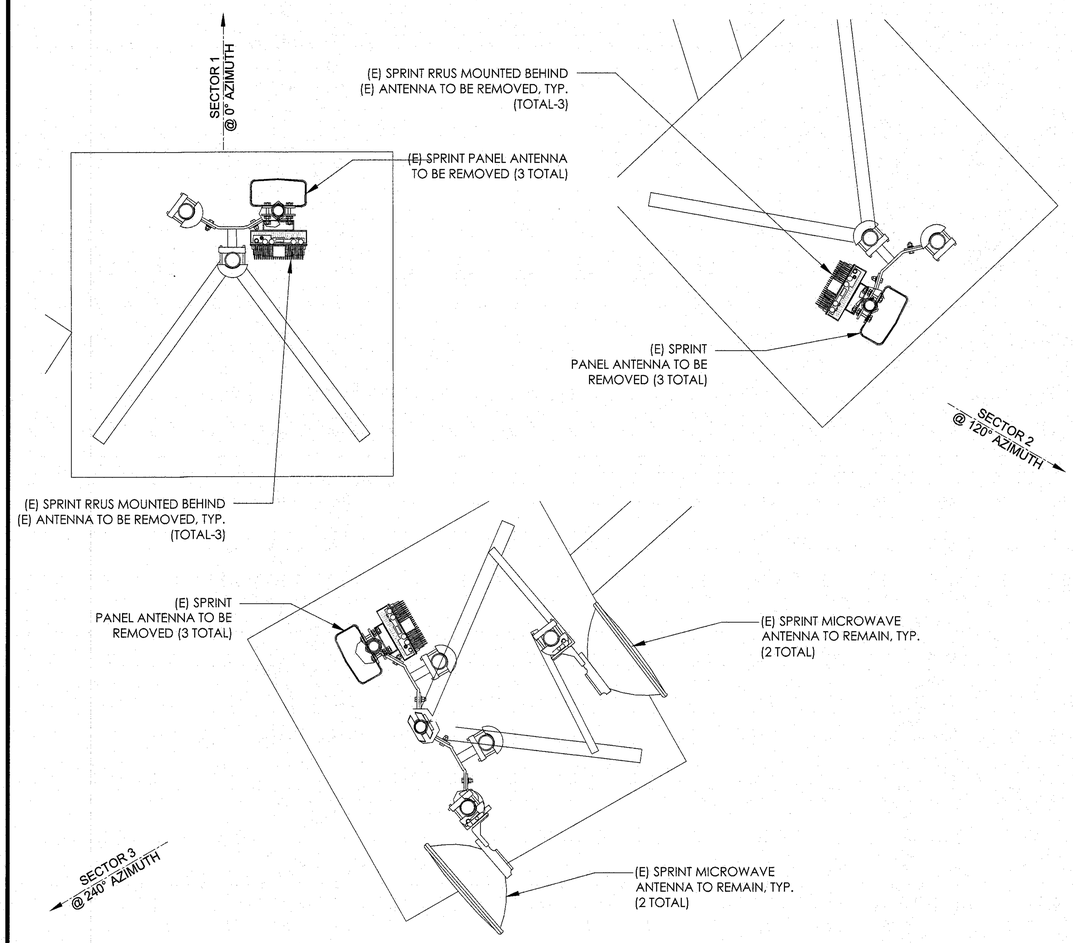

EXISTING ANTENNA PLAN

24"x36" SCALE: 3/4" = 1'-0"
11"x17" SCALE: 3/8" = 1'-0"

1

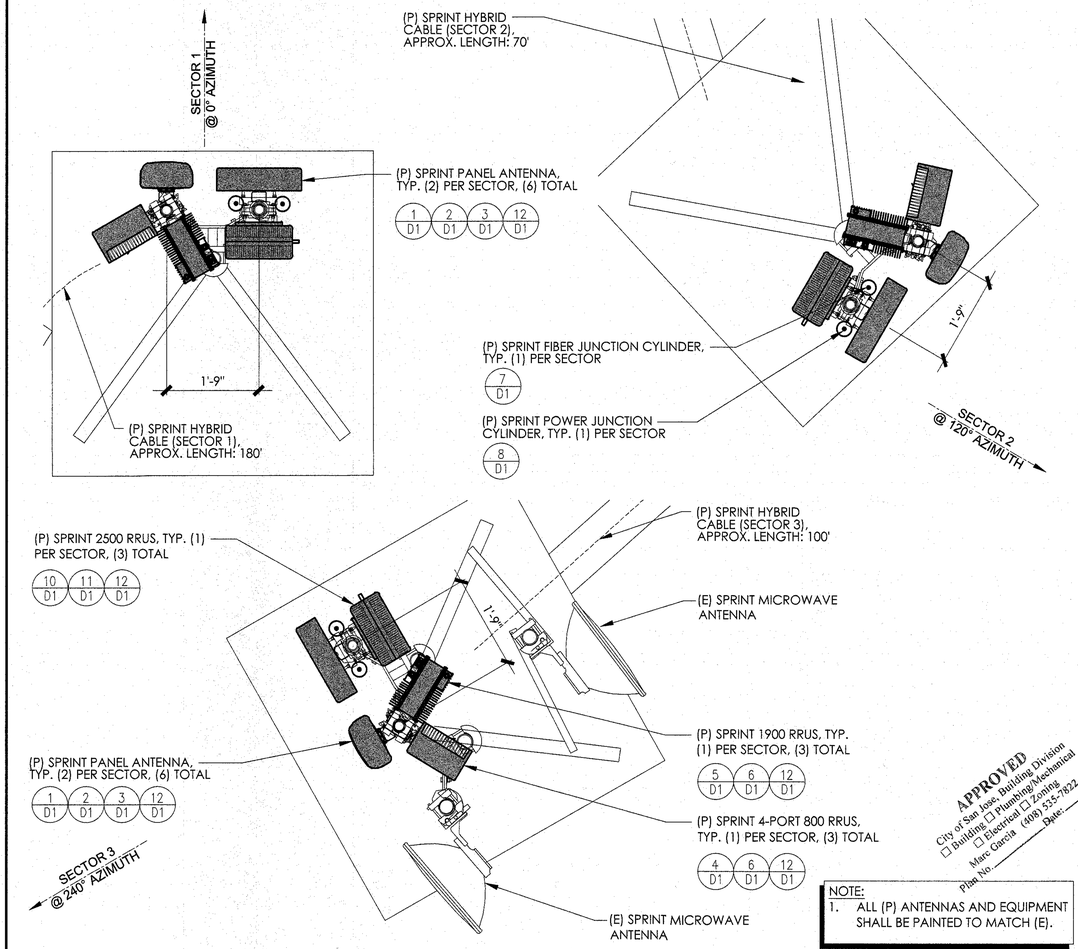

NOTE:
1. ALL (P) ANTENNAS AND EQUIPMENT SHALL BE PAINTED TO MATCH (E).

APPROVED
City of San Jose Building Division
☐ Building ☐ Plumbing/Mechanical
☐ Electrical ☐ Zoning
Marc Garcia (408) 535-7822
Plan No. _____ Date: _____

NEW ANTENNA PLAN

24"x36" SCALE: 3/4" = 1'-0"
11"x17" SCALE: 3/8" = 1'-0"

2

Sprint
6580 Sprint Parkway
Overland Park, Kansas 66251

THE INFORMATION CONTAINED IN THIS SET OF DRAWINGS IS PROPRIETARY & CONFIDENTIAL TO SPRINT. ANY USE OR DISCLOSURE OTHER THAN AS IT RELATES TO SPRINT IS STRICTLY PROHIBITED

J5 INFRASTRUCTURE PARTNERS
AZ - CA - CO - ID - NM - NV - TX - UT
2030 MAIN STREET, SUITE 200
IRVINE, CA 92614

SITE NUMBER:
SF52XC689
SITE NAME:
CHUCK E CHEESE

2445 FONTAINE RD.
SAN JOSE, CA 95121

REV	DATE	DESCRIPTION	
1	06/19/18	1ST ROUND PCC	MM3
0	05/01/18	100% CONSTRUCTION	MM3

REGISTERED PROFESSIONAL ENGINEER
MICHAEL S. TEETER
No. C 83930
CIVIL
STATE OF CALIFORNIA

IT IS A VIOLATION OF LAW FOR ANY PERSON, UNLESS THEY ARE ACTING UNDER THE DIRECTION OF A LICENSED PROFESSIONAL ENGINEER, TO ALTER THIS DOCUMENT.

SHEET TITLE
ANTENNA PLANS & SCHEDULES

SHEET NUMBER
A3

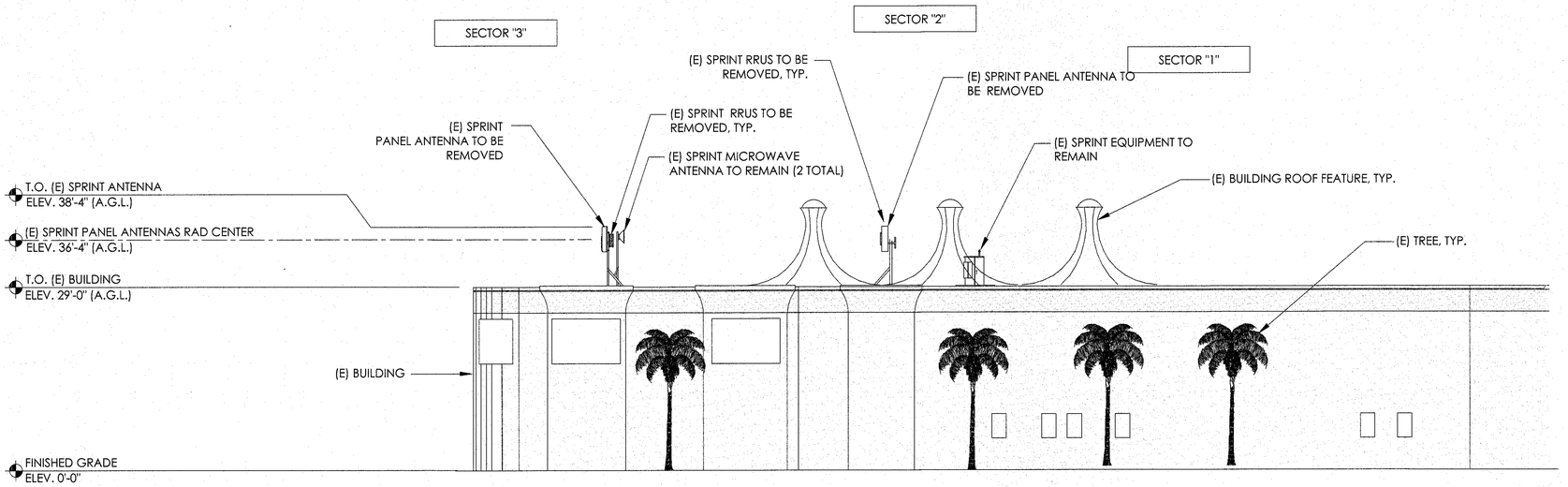

EXISTING SOUTHEAST ELEVATION

24"x36" SCALE: 3/32" = 1'-0"
11"x17" SCALE: 3/64" = 1'-0"
8' 4' 0" 8'

1

NOTE:
1. ALL (P) ANTENNAS AND EQUIPMENT SHALL BE PAINTED TO MATCH (E).

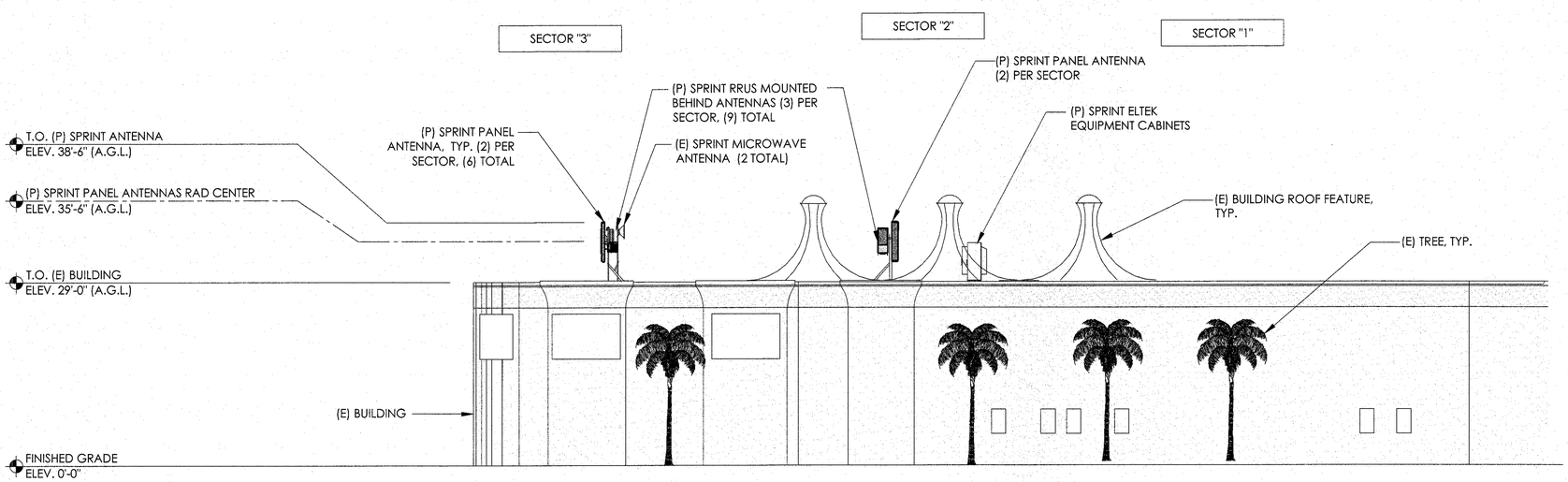

APPROVED
City of San Jose, Building Division
☐ Building ☐ Plumbing/Mechanical
☐ Electrical ☐ Zoning
Marc Gerelli (408) 535-7822
Plan No. _____ Date: _____

PROPOSED SOUTHEAST ELEVATION

24"x36" SCALE: 3/32" = 1'-0"
11"x17" SCALE: 3/64" = 1'-0"
8' 4' 0" 8'

2

Sprint
6580 Sprint Parkway
Overland Park, Kansas 66251

THE INFORMATION CONTAINED IN THIS SET OF DRAWINGS IS PROPRIETARY & CONFIDENTIAL TO SPRINT. ANY USE OR DISCLOSURE OTHER THAN AS IT RELATES TO SPRINT IS STRICTLY PROHIBITED

JS INFRASTRUCTURE
AZ - CA - CO - ID - NM - NV - TX - UT
2030 MAIN STREET, SUITE 200
IRVINE, CA 92614

SITE NUMBER:
SF52XC689
SITE NAME:
CHUCK E CHEESE

2445 FONTAINE RD.
SAN JOSE, CA 95121

REV	DATE	DESCRIPTION	
1	06/19/18	1ST ROUND PCC	MM3
0	05/01/18	100% CONSTRUCTION	MM3

REGISTERED PROFESSIONAL ENGINEER
MICHAEL B. MEYER
No. C 83930
CIVIL
STATE OF CALIFORNIA

IT IS A VIOLATION OF LAW FOR ANY PERSON, UNLESS THEY ARE ACTING UNDER THE DIRECTION OF A LICENSED PROFESSIONAL ENGINEER, TO ALTER THIS DOCUMENT.

SHEET TITLE
SOUTHEAST ELEVATIONS

SHEET NUMBER
A4

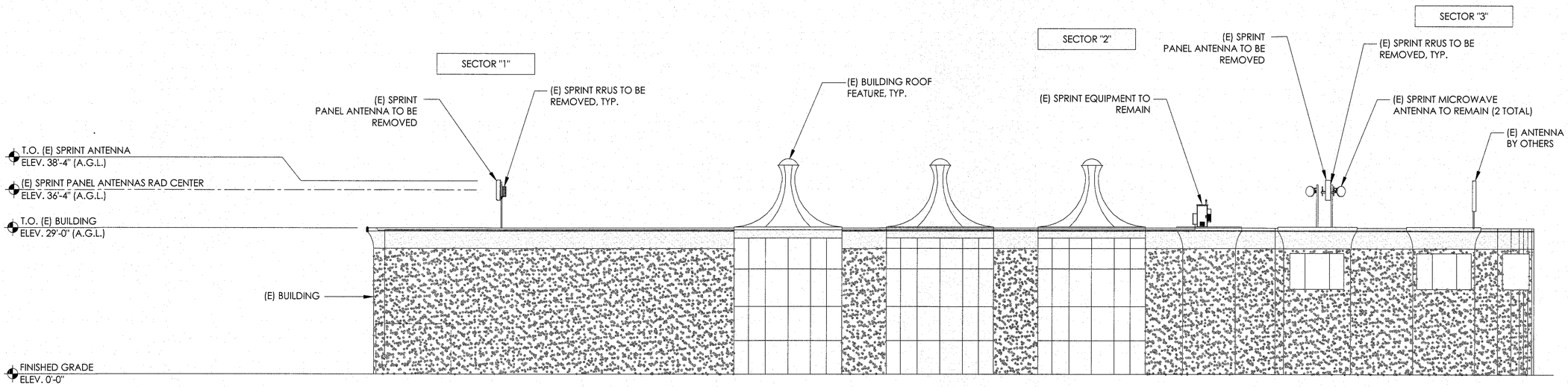

EXISTING WEST ELEVATION

24"x36" SCALE: 3/32" = 1'-0"
11"x17" SCALE: 3/64" = 1'-0"
8' 4' 0" 8'

1

NOTE:
1. ALL (P) ANTENNAS AND EQUIPMENT SHALL BE PAINTED TO MATCH (E).

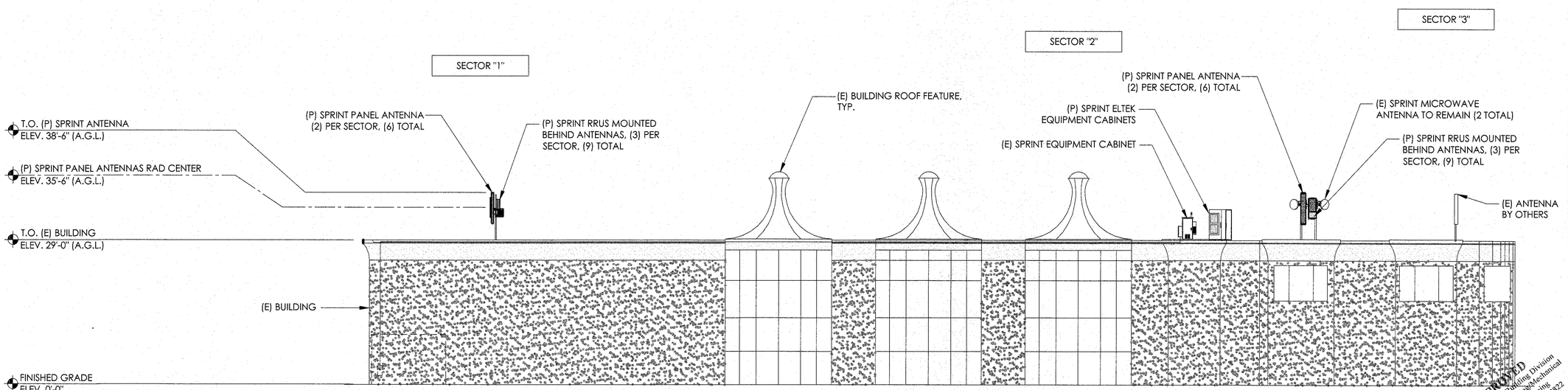

APPROVED
City of San Jose, Building Division
☐ Building ☐ Plumbing/Mechanical
☐ Electrical ☐ Zoning
Merc Garcia (408) 535-7822
Plan No. _____ Date: _____

PROPOSED WEST ELEVATION

24"x36" SCALE: 3/32" = 1'-0"
11"x17" SCALE: 3/64" = 1'-0"
8' 4' 0" 8'

2

Sprint
6580 Sprint Parkway
Overland Park, Kansas 66251

THE INFORMATION CONTAINED IN THIS SET OF DRAWINGS IS PROPRIETARY & CONFIDENTIAL TO SPRINT. ANY USE OR DISCLOSURE OTHER THAN AS IT RELATES TO SPRINT IS STRICTLY PROHIBITED

J5 INFRASTRUCTURE PARTNERS
AZ - CA - CO - ID - NM - NV - TX - UT
2030 MAIN STREET, SUITE 200
IRVINE, CA 92614

SITE NUMBER:
SF52XC689
SITE NAME:
CHUCK E CHEESE

2445 FONTAINE RD.
SAN JOSE, CA 95121

REV	DATE	DESCRIPTION	
1	06/19/18	1ST ROUND PCC	MM3
0	05/01/18	100% CONSTRUCTION	MM3

REGISTERED PROFESSIONAL ENGINEER
MICHAEL B. LEECER
No. C 83930
CIVIL
STATE OF CALIFORNIA

IT IS A VIOLATION OF LAW FOR ANY PERSON, UNLESS THEY ARE ACTING UNDER THE DIRECTION OF A LICENSED PROFESSIONAL ENGINEER, TO ALTER THIS DOCUMENT.

SHEET TITLE
WEST ELEVATIONS

SHEET NUMBER
A5

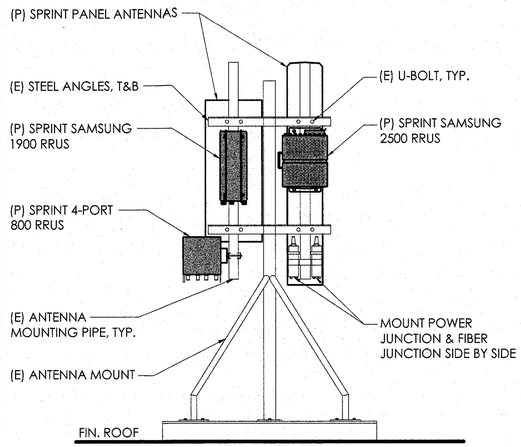

ANTENNA & RRUS MOUNT DETAIL

SCALE N.T.S. | 12

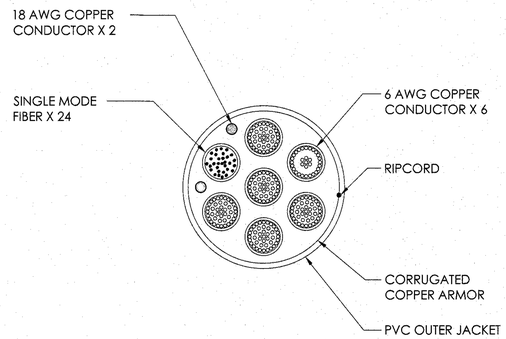

HYBRID CABLE DETAIL

SCALE N.T.S. | 9

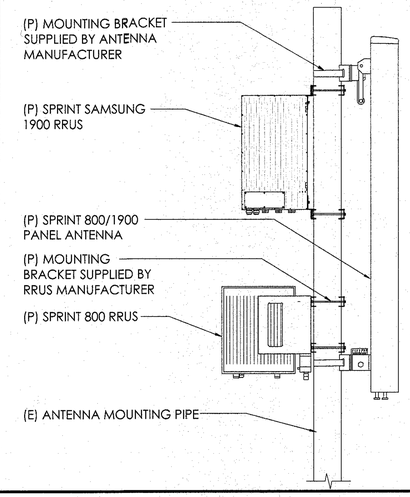

MOUNTING DETAIL

SCALE N.T.S. | 6

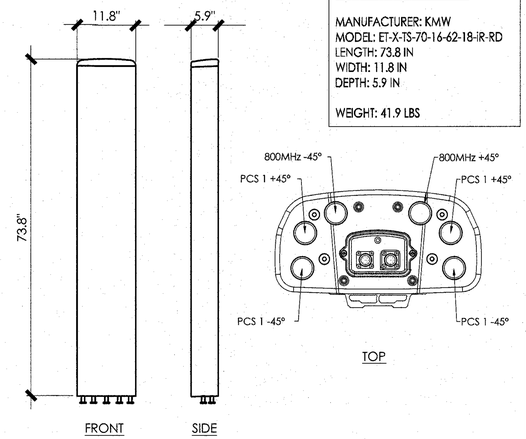

ANTENNA SPECIFICATIONS

MANUFACTURER: KMW
MODEL: ET-X-TS-70-16-62-18-iR-RD
LENGTH: 73.8 IN
WIDTH: 11.8 IN
DEPTH: 5.9 IN

WEIGHT: 41.9 LBS

ANTENNA SPECIFICATIONS

SCALE N.T.S. | 3

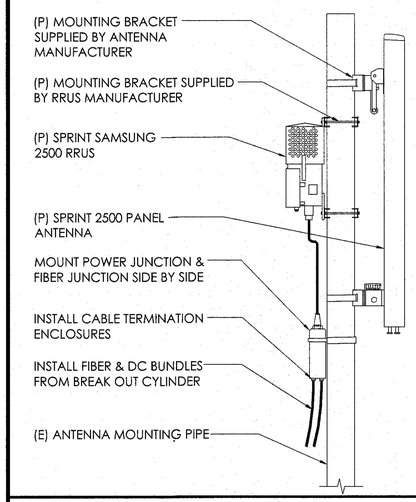

MOUNTING DETAIL

SCALE N.T.S. | 11

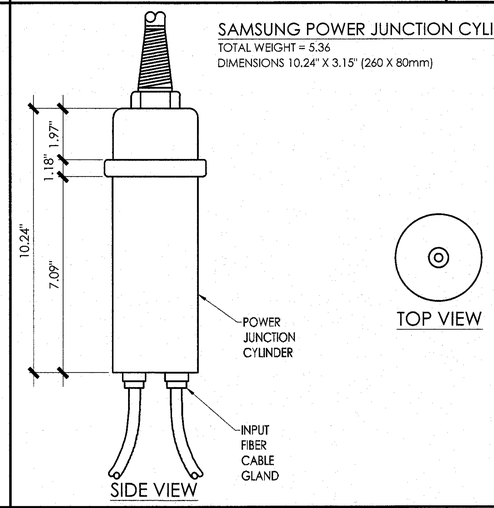

SAMSUNG POWER JUNCTION CYLINDER
TOTAL WEIGHT = 5.36
DIMENSIONS 10.24" X 3.15" (260 X 80mm)

POWER JUNCTION CYLINDER

SCALE N.T.S. | 8

SPECIFICATIONS:
DIMENSIONS: 23.8" X 13.8" X 9"

WEIGHT: 60 LBS

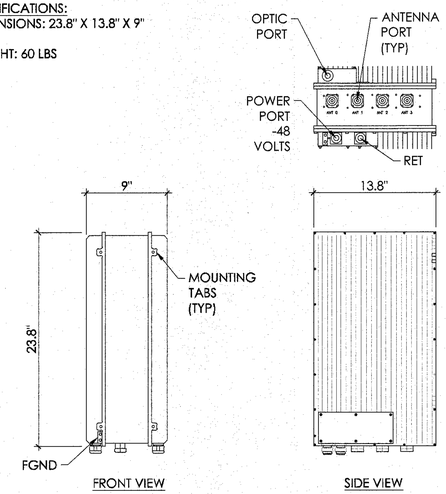

1900 MHz - RRUS - P4 DETAIL

SCALE N.T.S. | 5

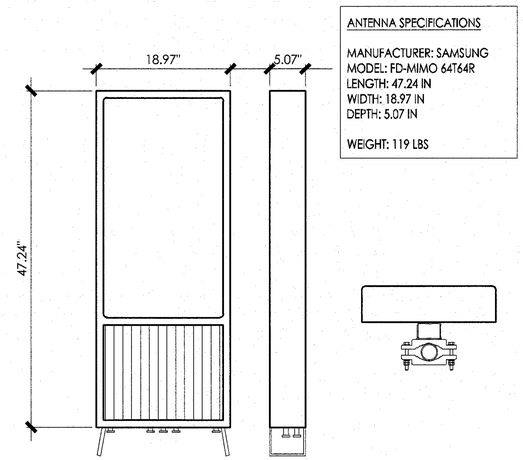

ANTENNA SPECIFICATIONS

MANUFACTURER: SAMSUNG
MODEL: FD-MIMO 64T64R
LENGTH: 47.24 IN
WIDTH: 18.97 IN
DEPTH: 5.07 IN

WEIGHT: 119 LBS

ANTENNA SPECIFICATIONS

SCALE N.T.S. | 2

SPECIFICATIONS:
SAMSUNG 2.5GHz RRUS
DIMENSIONS: 21.26" X 15.03" X 8.03"

WEIGHT: 65 LBS

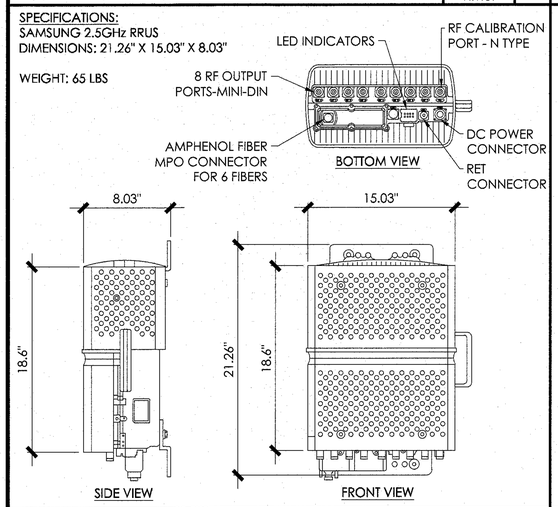

2500 MHz - RRUS DETAIL

SCALE N.T.S. | 10

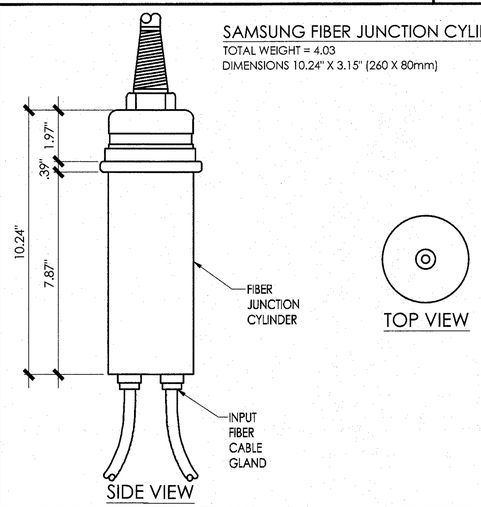

SAMSUNG FIBER JUNCTION CYLINDER
TOTAL WEIGHT = 4.03
DIMENSIONS 10.24" X 3.15" (260 X 80mm)

FIBER JUNCTION CYLINDER

SCALE N.T.S. | 7

SAMSUNG RFD01F RRUS-800MHz
DIMENSIONS:
383 X 320 X 195 MM
(15.09" X 12.59" X 7.68")

WEIGHT:
50 LBS

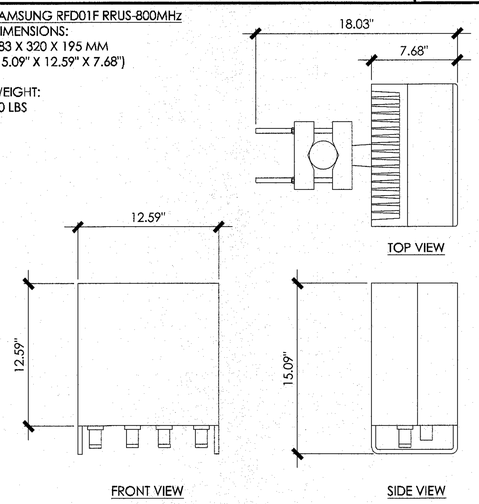

800 MHz - 4-PORT RRUS DETAIL

SCALE N.T.S. | 4

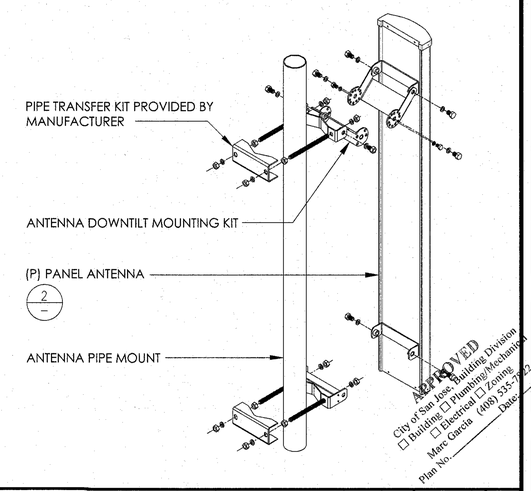

ANTENNA MOUNTING DETAIL

SCALE N.T.S. | 1

Sprint
6580 Sprint Parkway
Overland Park, Kansas 66251

THE INFORMATION CONTAINED IN THIS SET OF DRAWINGS IS PROPRIETARY & CONFIDENTIAL TO SPRINT. ANY USE OR DISCLOSURE OTHER THAN AS IT RELATES TO SPRINT IS STRICTLY PROHIBITED

INFRASTRUCTURE PARTNERS
AZ - CA - CO - ID - NM - NV - TX - UT
2030 MAIN STREET, SUITE 200
IRVINE, CA 92614

SITE NUMBER:
SF52XC689
SITE NAME:
CHUCK E CHEESE

2445 FONTAINE RD.
SAN JOSE, CA 95121

REV	DATE	DESCRIPTION	
1	06/19/18	1ST ROUND PCC	MM3
0	05/01/18	100% CONSTRUCTION	MM3

REGISTERED PROFESSIONAL ENGINEER MICHAEL B. LEFFLER No. C 83930 CIVIL STATE OF CALIFORNIA

IT IS A VIOLATION OF LAW FOR ANY PERSON, UNLESS THEY ARE ACTING UNDER THE DIRECTION OF A LICENSED PROFESSIONAL ENGINEER, TO ALTER THIS DOCUMENT.

SHEET TITLE
DETAILS

SHEET NUMBER
D1

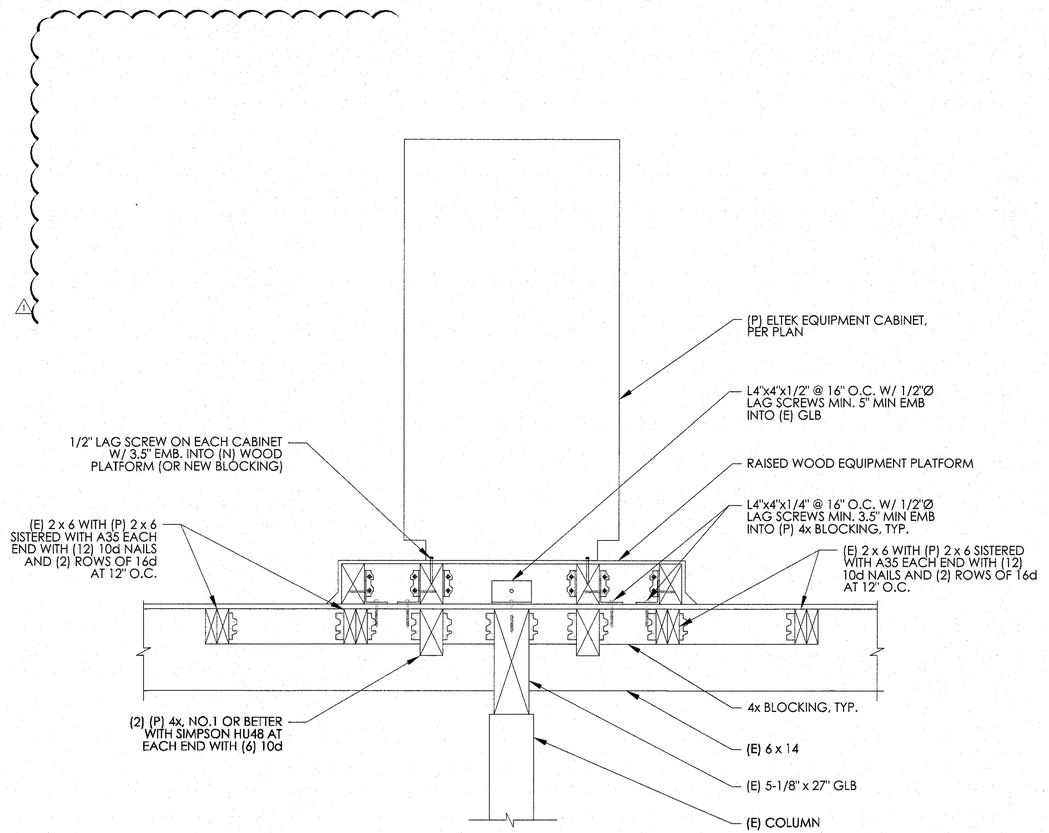

EQUIPMENT PLATFORM DETAIL

SCALE N.T.S. | 8

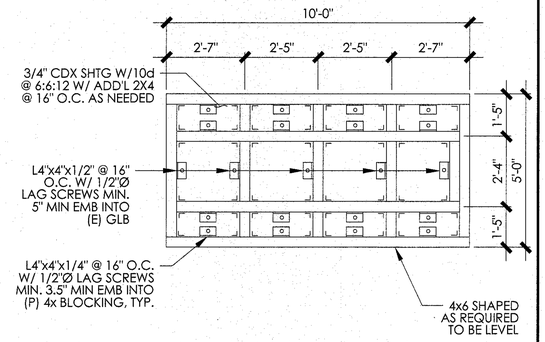

EQUIPMENT PLATFORM FRAMING

SCALE N.T.S. | 6

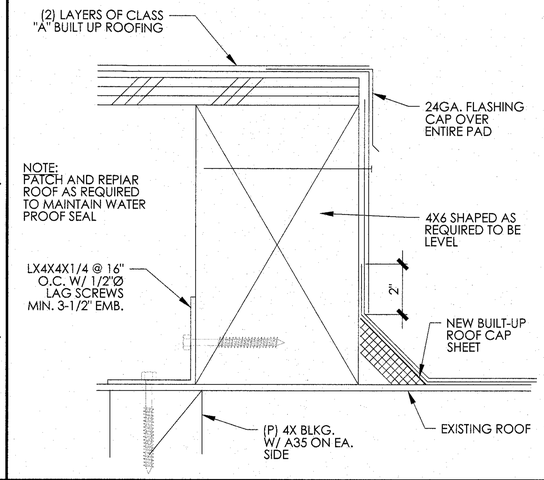

EQUIPMENT PLATFORM WATERPROOFING

SCALE N.T.S. | 3

CABINET SPECIFICATIONS

MANUFACTURER: ELTEK
MODEL: ESOF020-ECV02
HEIGHT: 73.5 IN
WIDTH: 16.5 IN
DEPTH: 34.7 IN
WEIGHT: 330 LBS
(W/OUT BATTERIES)

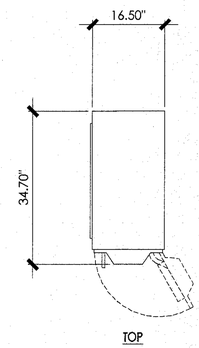

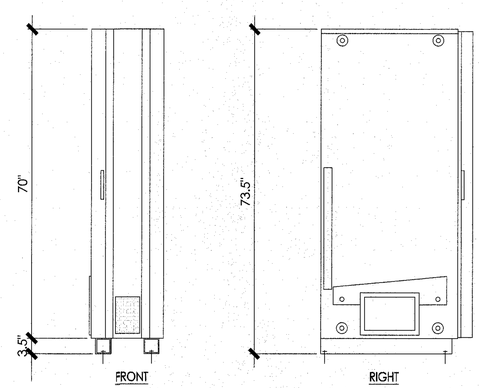

ELTEK BATTERY CABINET

SCALE N.T.S. | 4

CABINET SPECIFICATIONS

MANUFACTURER: ELTEK
MODEL: ESOA220-SCA02
HEIGHT: 73.5 IN
WIDTH: 30 IN
DEPTH: 38 IN
WEIGHT: 505 LBS
(W/OUT EQUIPMENT & BATTERIES)

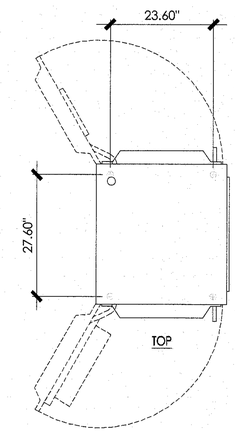

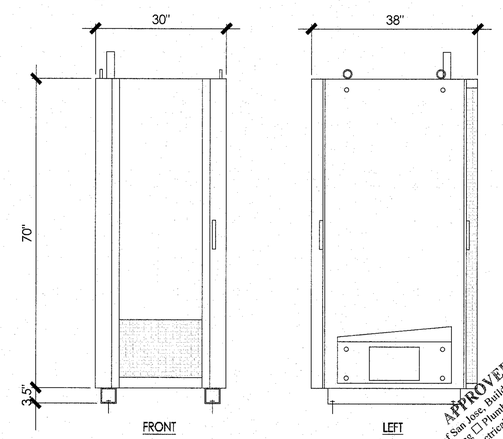

ELTEK EQUIPMENT CABINET

SCALE N.T.S. | 1

NOTE:
ALL NEW EQUIPMENT TO BE MOUNTED PER MANUFACTURER SPECIFICATIONS.

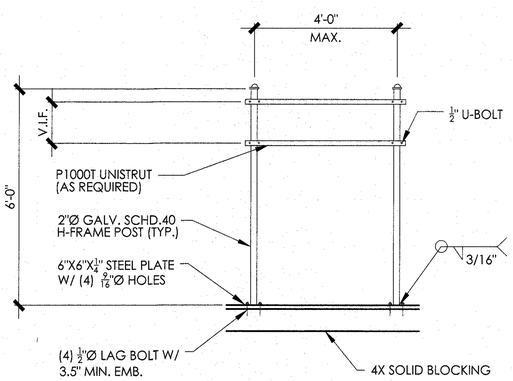

H-FRAME DETAIL

SCALE N.T.S. | 10

PPC SPECIFICATIONS

MANUFACTURER: ELTEK
MODEL: 5811122036
HEIGHT: 36 IN
WIDTH: 24 IN
DEPTH: 10 IN
WEIGHT: 80 LBS (W/OUT EQPM)

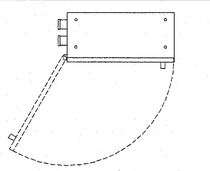

TOP VIEW WITH DOOR OPEN

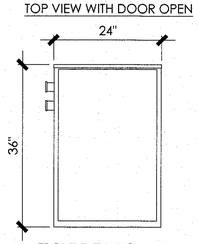

FRONT ELEVATION VIEW

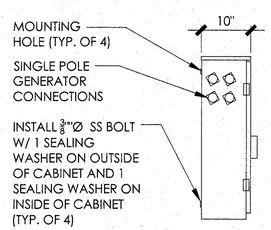

RIGHT ELEVATION VIEW

MOUNTING OPTIONS:
WOOD STUDS: 5/16"Ø LAG SCREW W/ A MIN. 2" EMB. IN 4 LOCATIONS
STEEL STUDS: 5/16"Ø THREADED ROAD WITH P1000 BACKER SPANNING A MIN. OF 3 STUDS
CONCRETE: 5/16"Ø CONCRETE ANCHOR BOLT W/ 2" MIN. EMB. IN 4 LOCATIONS

PPC CABINET W/ ATS

SCALE N.T.S. | 7

Sprint

6580 Sprint Parkway
Overland Park, Kansas 66251

THE INFORMATION CONTAINED IN THIS SET OF DRAWINGS IS PROPRIETARY & CONFIDENTIAL TO SPRINT ANY USE OR DISCLOSURE OTHER THAN AS IT RELATES TO SPRINT IS STRICTLY PROHIBITED

JS INFRASTRUCTURE
A S S O C I A T E S
AZ - CA - CO - ID - NM - NV - TX - UT
2030 MAIN STREET, SUITE 200
IRVINE, CA 92614

SITE NUMBER:
SF52XC689
SITE NAME:
CHUCK E CHEESE

2445 FONTAINE RD.
SAN JOSE, CA 95121

REV	DATE	DESCRIPTION	
1	06/19/18	1ST ROUND PCC	MM3
0	05/01/18	100% CONSTRUCTION	MM3

REGISTERED PROFESSIONAL ENGINEER
MICHAEL B. LEFFLER
No. C 83930
CIVIL
STATE OF CALIFORNIA

IT IS A VIOLATION OF LAW FOR ANY PERSON, UNLESS THEY ARE ACTING UNDER THE DIRECTION OF A LICENSED PROFESSIONAL ENGINEER, TO ALTER THIS DOCUMENT.

SHEET TITLE
DETAILS

SHEET NUMBER
D2

APPROVED
City of San Jose, Building Division
☐ Building ☐ Plumbing/Mechanical
☐ Electrical ☐ Zoning
Marc Garcia (408) 535-7822
Permit No. _____ Date: _____

NOT USED | 12 | NOT USED | 9

NOT USED | 11 | NOT USED | SCALE N.T.S. | 8

NOT USED | 10 | NOT USED | 7

connect@alpinepowersystems.com
877-993-8855

ALPINE POWER SYSTEMS
A Division of TFI, Inc. est. 1962

Click to view product web page

C&D TECHNOLOGIES Power Solutions

C&D TECHNOLOGIES® | TEL

C&D TRUE FRONT ACCESS®

TEL Series Float Service

TEL12-210Fa

Typical Wireline Application

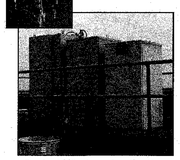

Typical Wireless Application

BENEFITS:

Leading Uninterruptible Power Supplies
- Confidence that the Battery Outlasts Service
- Premium alloy and material components
- True Front Access Design
  - True direct connect at cover, front & rear
  - C&D Optimal Array for accurate testing
  - Connection integrity
- Maximum Energy Density
  - Equipment footprint is direct function of capacity
  - Low total installed cost
- Complies to or exceeds specifications
  - Bellcore SR-3580 Issue 1 & 1997
  - IEC 896-2 & 896-1
  - Telcordia GR-63-CORE
  - Telcordia GR-63-CORE & GR-1089-CORE
  - UL94 V-0 PVC
  - Non-Hazardous, non-toxic and free of any hazardous materials
- Ultra Low Maintenance
  - Low self discharge
  - Reduced Maintenance
  - Reduced Cost of Ownership
  - Reduced Cost of Ownership
  - Reduced Cost of Ownership

SPECIFICATIONS

Battery Model	Voltage Per Unit	Ampere Hour Capacity to 1.75 Volts per Cell @ 77°F (25°C) for 1 Hr.	Ampere Hour Capacity to 1.80 Volts per Cell @ 68°F (20°C) for 1 Hr.	Maximum Discharge Current	Short Circuit Current	Internal Ohmic Resistance (Ω)	Battery Weight
TEL12-210Fa	12 V	210	195.4	1000 Amperes	4000 Amperes	0.0	140 lbs/64 kg

connect@alpinepowersystems.com
877-993-8855

SPECIFICATIONS

Ampere Hour Capacity to 1.75 Volts per Cell @77°F (25°C)

Model	Discharge in Hours 1	2	3	4	5	6	7	8	9	10
TEL12-210Fa	138	157	170	178	190	195	199	202	206	210

Ampere Hour Capacity to 1.80 Volts per Cell @68°F (20°C)

Model	Discharge in Hours 1	2	3	4	5	6	7	8	9	10
TEL12-210Fa	126	138	153	166	175	179	183	186	190	195

DIMENSIONS

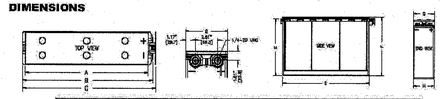

Model	1	mm	2	mm	3	mm	4	mm	5	mm	6	mm	7	mm	8	mm	9	mm	10	mm
TEL12-210Fa	353	185	215	140	330	68	351	152	163	315	125	90	43	18	48	105				

*All dimensions in inches and (millimeters). All dimensions are nominal only. Contact C&D Representative for simplified dimensional information.

Operating Temperature Range (with temperature compensation)	Discharge: -40°F (-40°C) to 160°F (71°C) Charge: -10°F (-23°C) to 140°F (60°C)
Nominal Operating Temperature Range	+68°F (20°C) to +80°F (27°C)
Recommended Maximum Charging Current Limit	C_{20}/5 Amperes (46 A)
Float Charging Voltage	13.5 to 13.8 VDC average per 12V unit
Maximum AC Ripple Voltage	0.5% RMS or 1.5% P-P of float charge voltage recommended for best results. Max AC ripple voltage allowed = 1.4% RMS (4% P-P) Max AC ripple current allowed = 11.5 amperes RMS (C_{20}/20)
Self Discharge	Battery can be stored up to 6 months at 77°F (25°C) before a freshening charge is required. Batteries stored at temperatures greater than 77°F (25°C) will require recharge sooner than batteries stored at lower temperatures. See C&D Bulletin 41-2272, Self-Discharge and Inventory Control for details.
Equalizing Charge and Cycle Service Voltage	14.40 to 14.80 VDC average per 12V unit @ 77°F (25°C)
Terminals Inserted - Terminal Connector and Hardware Provided	Threaded copper alloy insert terminal to accept 1/4-20 bolt
Terminal Torque	110 in.-lbs. (12.4 N-m)
Replacement Parts	Battery Part Number: TEL12-210Fa CLEI Code: Pending CPR: Pending

ALPINE POWER SYSTEMS
A Division of TFI, Inc. est. 1962

connect@alpinepowersystems.com
877-993-8855

Battery Services for Backup Power
- Battery Installation
- Capacity and Acceptance Testing
- Preventative Maintenance
- Recycling

backup power | telecom | motive power
alpinepowersystems.com

NOT USED | 11 | NOT USED | SCALE N.T.S. | 8 | BATTERY SPECIFICATIONS | 2

NOT USED | 10 | NOT USED | 7 | BATTERY INFORMATION | 1

BATTERY INFORMATION

INSTALL STATUS	BATTERY MODEL	TOTAL # OF BATTERY UNITS INSTALLED (EA)	TOTAL ELECTROLYTE VOLUME (GALLONS) PER UNIT	TOTAL ELECTROLYTE WEIGHT (LBS) PER UNIT	TOTAL LEAD WEIGHT (LBS) PER UNIT	TOTAL SULFURIC ACID WEIGHT (LBS) PER UNIT	% SULFURIC ACID BY WEIGHT =	TOTAL SULFURIC ACID WEIGHT/UNIT TOTAL ELECTROLYTE WEIGHT/UNIT	TOTAL SULFURIC ACID BY WEIGHT (LBS) =	TOTAL # OF UNITS x TOTAL SULFURIC ACID WEIGHT/UNIT	TOTAL ELECTROLYTE BY VOLUME (GALLONS) =	TOTAL # OF UNITS x TOTAL ELECTROLYTE VOLUME/UNIT	TOTAL ELECTROLYTE BY WEIGHT (LBS) =	TOTAL # OF UNITS x TOTAL ELECTROLYTE WEIGHT/UNIT
EXISTING TO REMAIN	NONE	0	0	0	0	0	#DIV/0!		0.00		0.00		0.00	
IN-FLIGHT	NONE	0	0	0	0	0	#DIV/0!		0.00		0.00		0.00	
PROPOSED	C&D TECHNOLOGIES - TEL 12-210Fa	16	2.4	27.6	27.6	12	43.48%		192.00		38.40		441.60	
TOTAL	N/A	16	N/A	N/A	N/A	N/A	N/A		192.00		38.40		441.60	

APPROVED
City of San Jose - Building Division
☐ Building ☐ Plumbing/Mechanical
☐ Electrical ☐ Zoning
Merc Garcia (408) 535-3522
Plan No. _____ Date _____

Sprint
6580 Sprint Parkway
Overland Park, Kansas 66251

THE INFORMATION CONTAINED IN THIS SET OF DRAWINGS IS PROPRIETARY & CONFIDENTIAL TO SPRINT ANY USE OR DISCLOSURE OTHER THAN AS IT RELATES TO SPRINT IS STRICTLY PROHIBITED

15 INFRASTRUCTURE
AZ - CA - CO - ID - NM - NV - TX - UT

2030 MAIN STREET, SUITE 200
IRVINE, CA 92614

SITE NUMBER:
SF52XC689
SITE NAME:
CHUCK E CHEESE

2445 FONTAINE RD.
SAN JOSE, CA 95121

REV	DATE	DESCRIPTION	
1	06/19/18	1ST ROUND PCC	MM3
0	05/01/18	100% CONSTRUCTION	MM3

REGISTERED PROFESSIONAL ENGINEER
MICHAEL B. SLEEPER
No. C 83930
CIVIL
STATE OF CALIFORNIA

IT IS A VIOLATION OF LAW FOR ANY PERSON, UNLESS THEY ARE ACTING UNDER THE DIRECTION OF A LICENSED PROFESSIONAL ENGINEER, TO ALTER THIS DOCUMENT.

SHEET TITLE
DETAILS

SHEET NUMBER
D3