63664

63664

PLACE

Sub Doc Type

BL

Number LG Docs

0034

Box Number

Street #

1105

Street Dir

Doc Type

PL

Street Name

SARATOGA

Street Type

AV

Tract Number

Document Date

12/9/69

	Prepped By	Scanned By	Indexed By	Verified By
Initials	RS	VC		
Date	6/15/01	6/15/01		

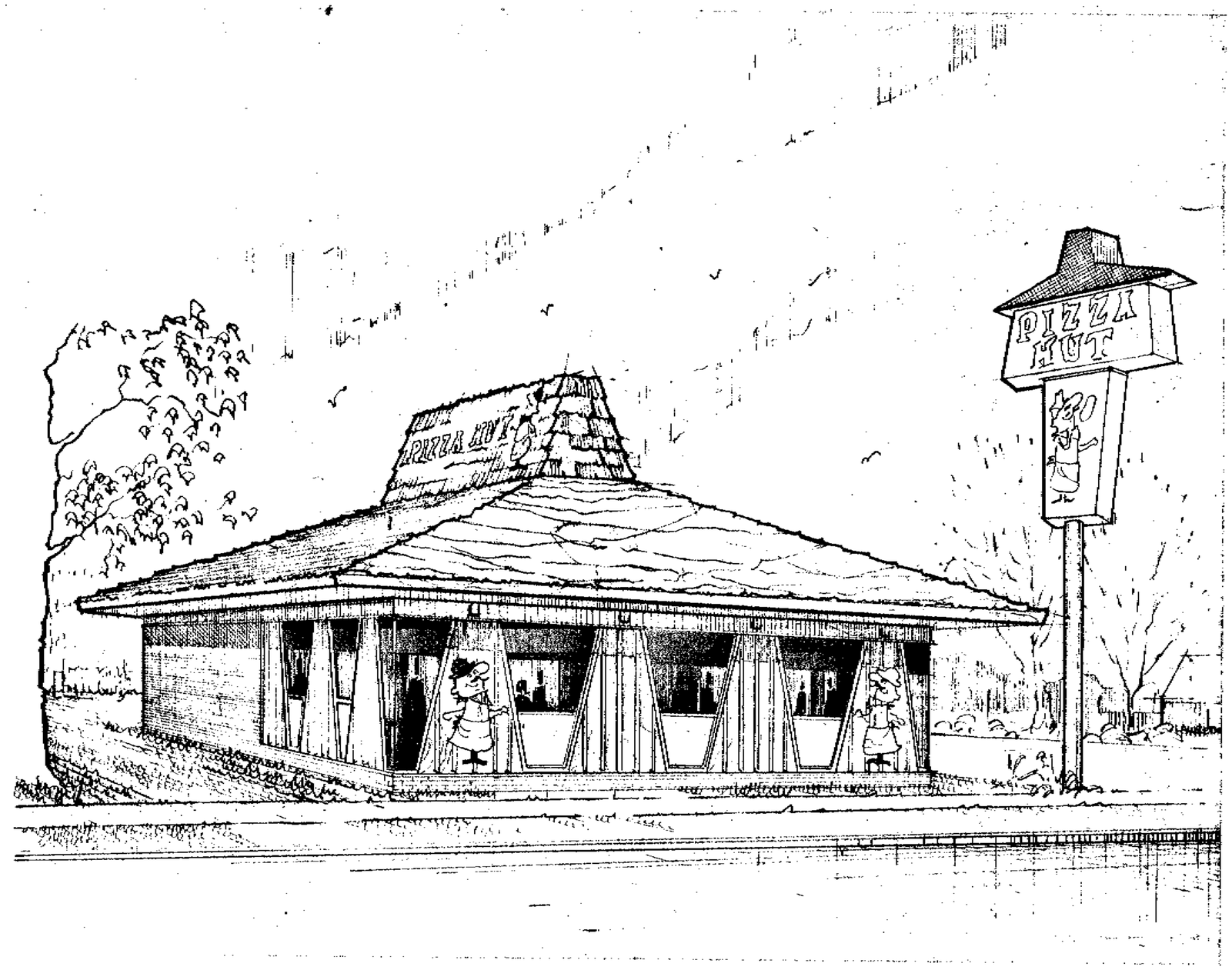

Fire Dept's requirements forthcoming

PIZZA HUT INC.

63664

GRIFFITH & BONHAM ARCHITECTS A.I.A.
314 BITTING BUILDING 67202 WICHITA, KANSAS

NOTE:
THIS ORIGINAL DESIGN IS PROTECTED BY COPYRIGHTS HELD BY PIZZA HUT INC. AND IS HEREBY REPRODUCED AND MODIFIED FOR THE EXCLUSIVE USE OF PIZZA HUT INC

Bld 1 story type II m Bus
1105 Saratoga

C-1-H
F 2
26

H 69-9-251

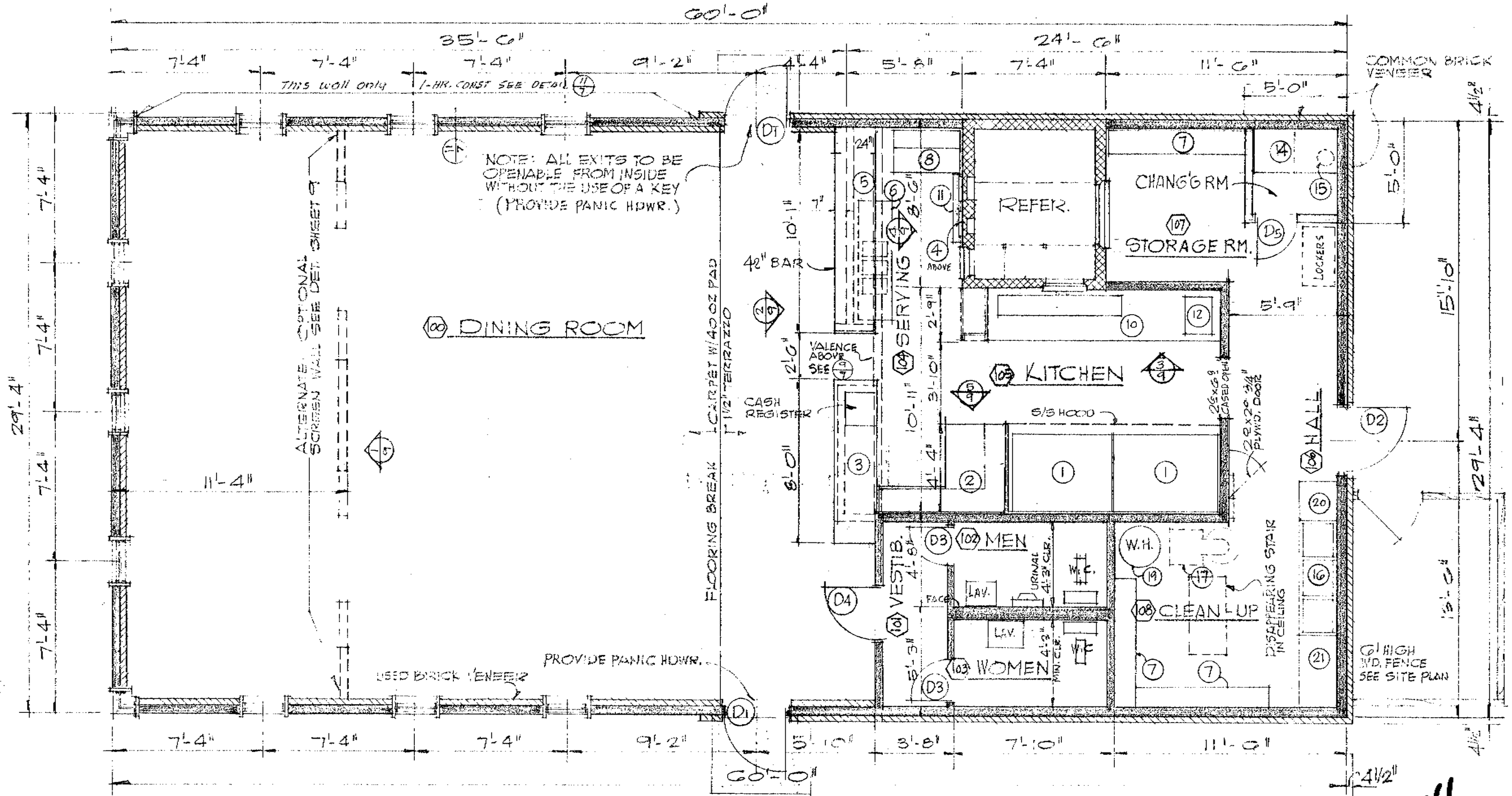

FLOOR PLAN
SCALE 1/4"=1'-0"

63664

2

GENERAL NOTES

1. EXTERIOR DIMENSIONS ARE TO FACE OF SHEATHING
2. INTERIOR " " " " " STUDS
3. ALL FRAME WALLS ARE TO BE 2x4 STUDS @ 16" O.C. UNLESS OTHERWISE SHOWN.

PIZZA HUT INC.

Ralph Rapattoni	DRAWN: R.R.	DATE: 10/23/69	SHEET 1
		REV. NO.	
	FLOOR PLAN		OF 13

1. Revised 12/4/69 R.R.

INTERIOR FINISH SCHEDULE

ROOM #	DESCRIP.	FLOOR	BASE	WALLS	CEILING	REMARKS
100	DINING	TERRAZZO & CARPET	BRICK	USED BRICK VEN'R & MARLITE "WILD CHERRY" #793 W/MATCH'G TRIM & BASE	ACOUSTIC TEXT. ON 5/8" GYP. BD.	DOORS TO BE BIRCH OR ASH VENEER STAIN TO MATCH MARLITE
101	VESTIBULE	TERRAZZO	BLACK TOPSET RUB.	STIPPLE ENAMEL ON 5/8" GYP BD.	do	DOORS TO BE BIRCH OR ASH VENEER STAIN TO MATCH MARLITE
102	MEN'S RM.	do	do	do	STIPPLE ENAM. ON 5/8" GYP BD.	MARLITE GOLD LACE #524 WAINSCOTE 48" HIGH 4-WALLS
103	WOMEN'S RM	do	do	do	do	do
104	SERVING	do	do	Marlite #325 OAK over 5/8 Gyp. board	ACOUSTIC TEXT. ON 5/8" GYP. BD.	GLASS REACH-IN DOOR (REFR.)
105	KITCHEN	do	do	MARLITE DELUXE HIGH GLOSS #C11 (SWAN WHITE) OVER 5/8" GYP. BD.	MATCH WALLS	
106	HALL	do	do	STIPPLE ENAMEL OVER 5/8" GYP BD.	MATCH WALLS	
107	STORE RM.	do	do	do	do	
108	CLEAN-UP	do	do	do	do	FORMICA SPLASH BACK & COUNTER SEE DETAIL

GENERAL NOTES

1. ALL DOORS TO BE EQUIPED W/ SELF CLOSERS
2. REACH-IN DOOR & WALK-IN DOOR TO BE FURNISHED & INSTALLED BY TENNANT.
3. GLASS REACH-IN DOOR MANUFACTURED BY ANTHONY

NAILING SCHEDULE

CONNECTION	BOX OR COMMON
STUD TO PLATE - END NAIL	2-16d
STUD TO PLATE TOE NAIL	3-16d or 4-8d
TOP PLATES SPIKE TOGETHER	16d @ 24" o.c.
TRUSS TO PLATE	3-16d
CORNER STUDS & ANGLES	16d @ 30" o.c.
BLOCKING TO STUDS OR RAFT.	2-16d

EQUIPMENT & FURNISHINGS SCHEDULE

SYM.	DESCRIPTION	REMARKS
1	OVENS	FURN. BY TENANT CONTRACTOR INSTALLS
2	CUTTING TABLE	CONTR. FURNISHES & INSTALLS - SEE DET.
3	REGISTER COUNTER	CONTR. FURNISHES & INSTALLS - SEE DET.
4	MENU BOARD	FURN. BY TENANT CONTRACTOR INSTALLS
5	BAR	CONTR. FURNISHES & INSTALLS SEE DET.
6	SINKS	FURN. BY TENANT CONTR. INSTALLS
7	SHELVING	CONTR. FURNISHES & INSTALLS
8	ICE MAKER	FURNISHED BY TENANT NIC
9	DELETED	———
10	MAKE-TABLE	CONTR. FURNISHES & INSTALLS
11	DRINK SHELF	TENANT FURNISHES CONTR. INSTALLS
12	DOUGH ROLLER	FURNISHED BY TENANT
13	WALK-IN REFRIG.	CONTR. FURN & INST. INSULATED CASE TENANT FURN & INST. DOORS & REFRIG. EQ.
14	BUILT-IN DESK	CONTR. FURNISHES & INSTALLS
15	FLOOR SAFE	FURN. BY TENANT CONTR. INSTALLS
16	SINKS	FURN BY TENANT CONTR. INSTALLS
17	MIXER	FURNISHED BY TENANT N.I.C.
18	VENTILATING HOOD	CONTR. FURNISHES & INSTALLS SEE DET.
19	WATER HEATER	CONTR. FURNISHES & INSTALLS
20	STAINLESS DRAIN TRAY	FURN BY TENANT CONTR. INSTALLS
21	FORMICA COUNTER	CONTR. FURNISHES & INSTALLS

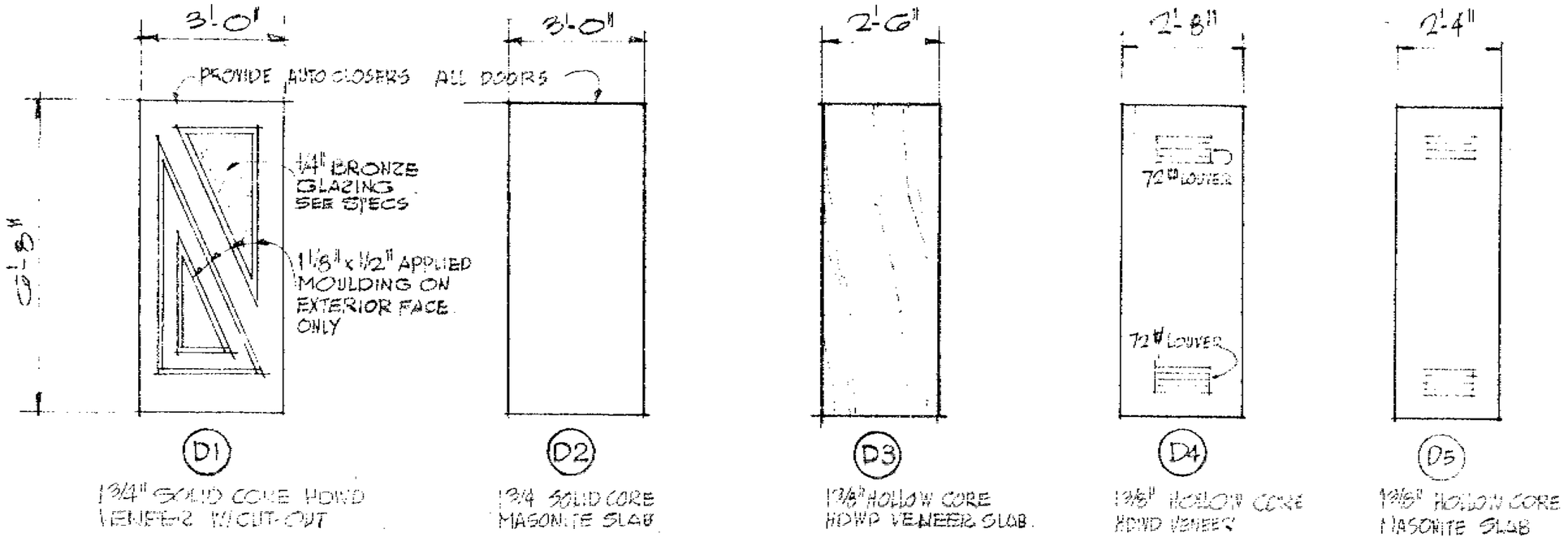

D1 — 1 3/4" SOLID CORE HDWD VENEER W/CUT-OUT

D2 — 1 3/4 SOLID CORE MASONITE SLAB

D3 — 1 3/8" HOLLOW CORE HDWD VENEER SLAB.

D4 — 1 3/8" HOLLOW CORE HDWD VENEER

D5 — 1 3/8" HOLLOW CORE MASONITE SLAB

DOOR DETAILS

1/4" = 1'-0"

63664

3

REGISTERED PROFESSIONAL ENGINEER
No 17506
CIVIL
STATE OF CALIFORNIA

PIZZA HUT INC.

Ralph Pugliani	DRAWN R.R.	DATE 10/23/69	SHEET 2
		REV. NO.	
	SCHEDULES		OF 13

1. Revised 12/4/69 RR

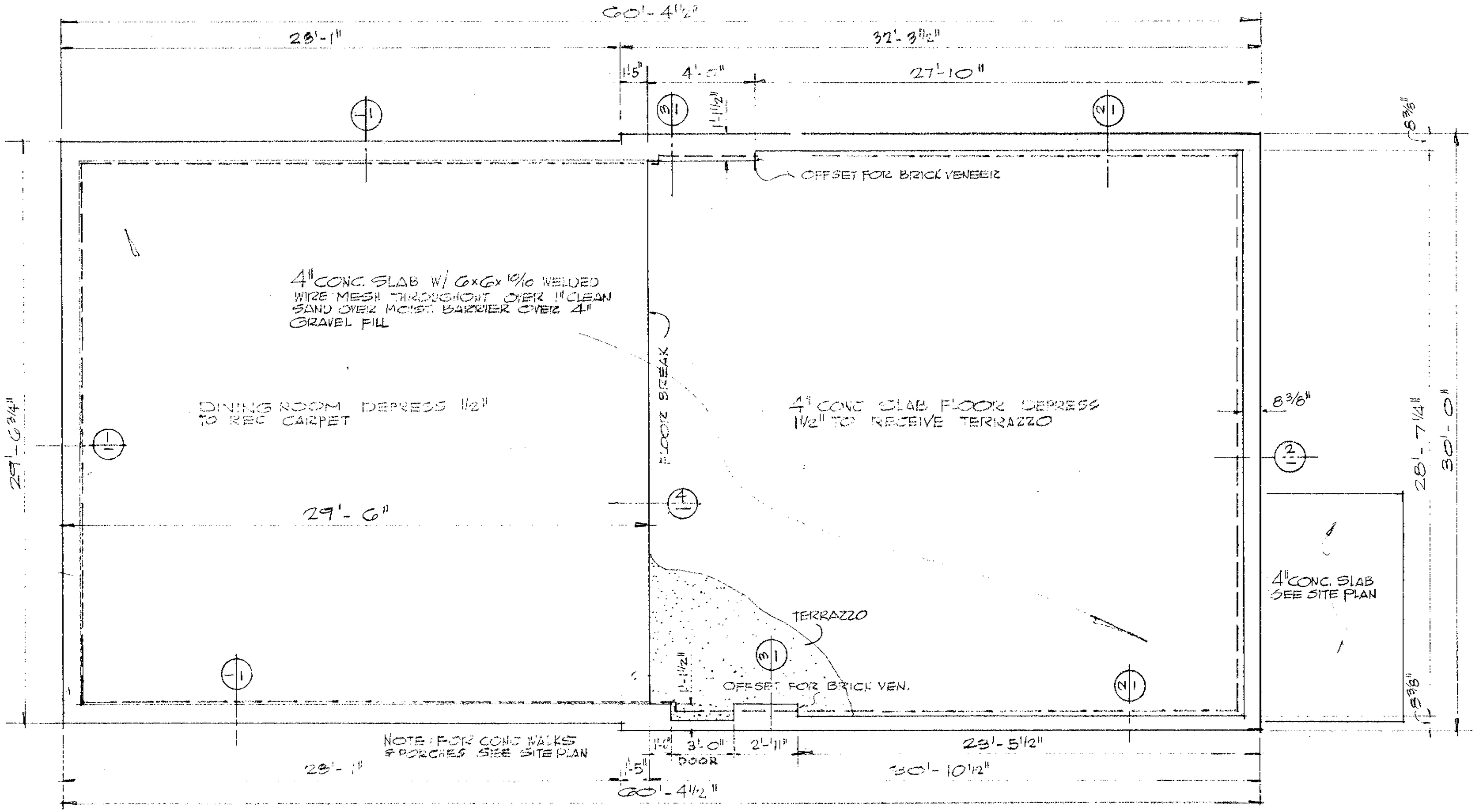

FOUNDATION PLAN SCALE 1/4" = 1'-0"

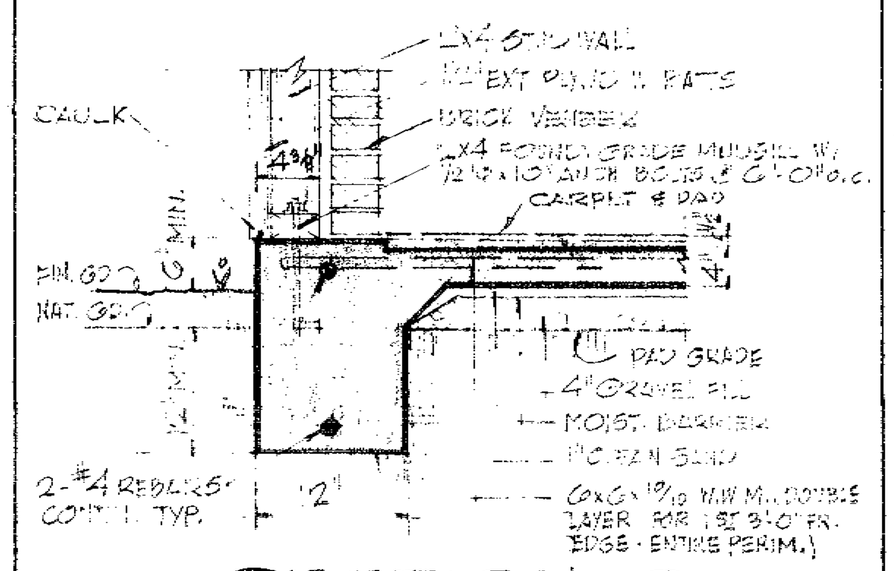

SECTION 1

SCALE 1" = 1'-0"

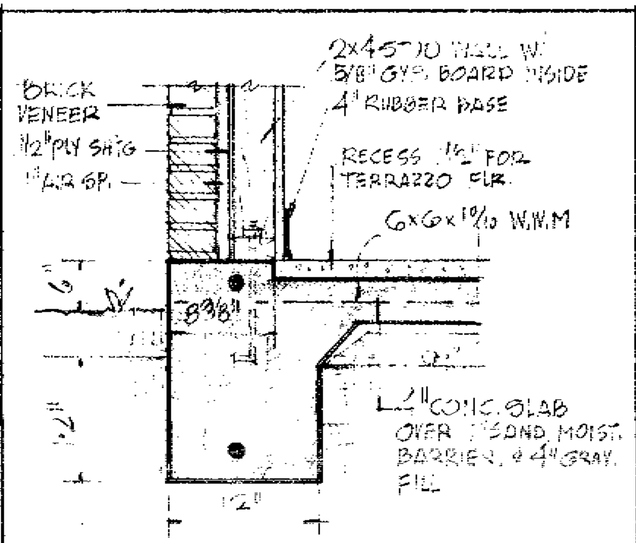

SECTION 2

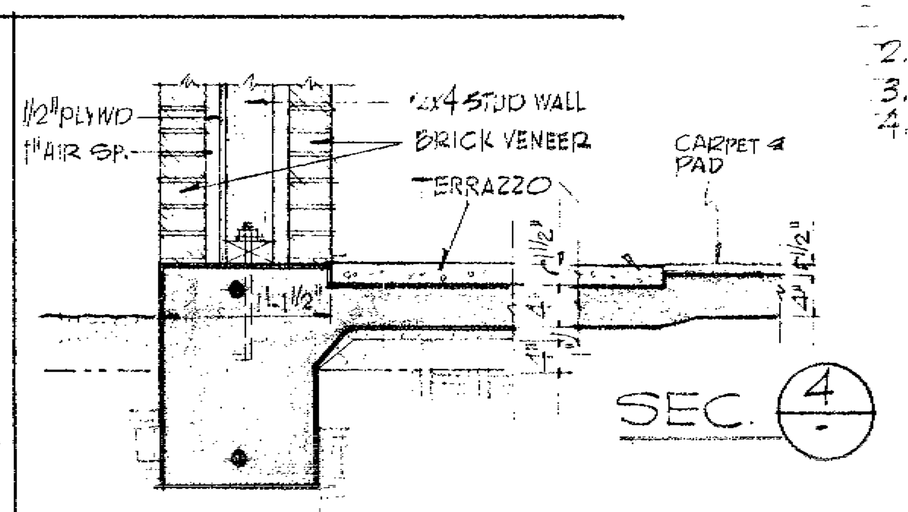

SEC. 4

SECTION 3

1. Revised dimensions 12/4/69 R.R.

STRUCTURAL NOTES

1. SOIL: SANDY CLAY ALLOWABLE [illegible] PRESSURE = 200[illegible] AT 12" [illegible] GRADE
2. CONCRETE: STD. 5-[illegible] MIX 2[illegible] PSI @ 28 DAYS
3. REINFORCING: AS[illegible]-15, 16[illegible] PSI
4. MASONRY MORTAR: [illegible] PART [illegible] CEMENT, 1/4 PART HYDRATED LIME & 3 PARTS SAN[illegible] 2000 PSI.)

6366

4

PIZZA HUT INC.

DRAWN: R.R.	DATE: 10/23/69	SHEET 3 OF [illegible]
	REV. NO	
FOUNDATION PLAN		

REGISTERED PROFESSIONAL ENGINEER
No. 17506
CIVIL
STATE OF CALIFORNIA

WOOD TRUSS DESIGN

TRUSS MANUFACTURER SHALL SUBMIT SHOP DRAWINGS AND STRUCTURAL CALCULATIONS FOR APPROVAL PRIOR TO FABRICATING TRUSSES

DESIGN LOADS:

ROOF D.L. =	15 PSF	
ROOF L.L. =	20 PSF	
ATTIC L.L. =	10 PSF	
WIND	15 PSF	(HORIZ.)

DETAIL OF ALTERNATE END FRAMING

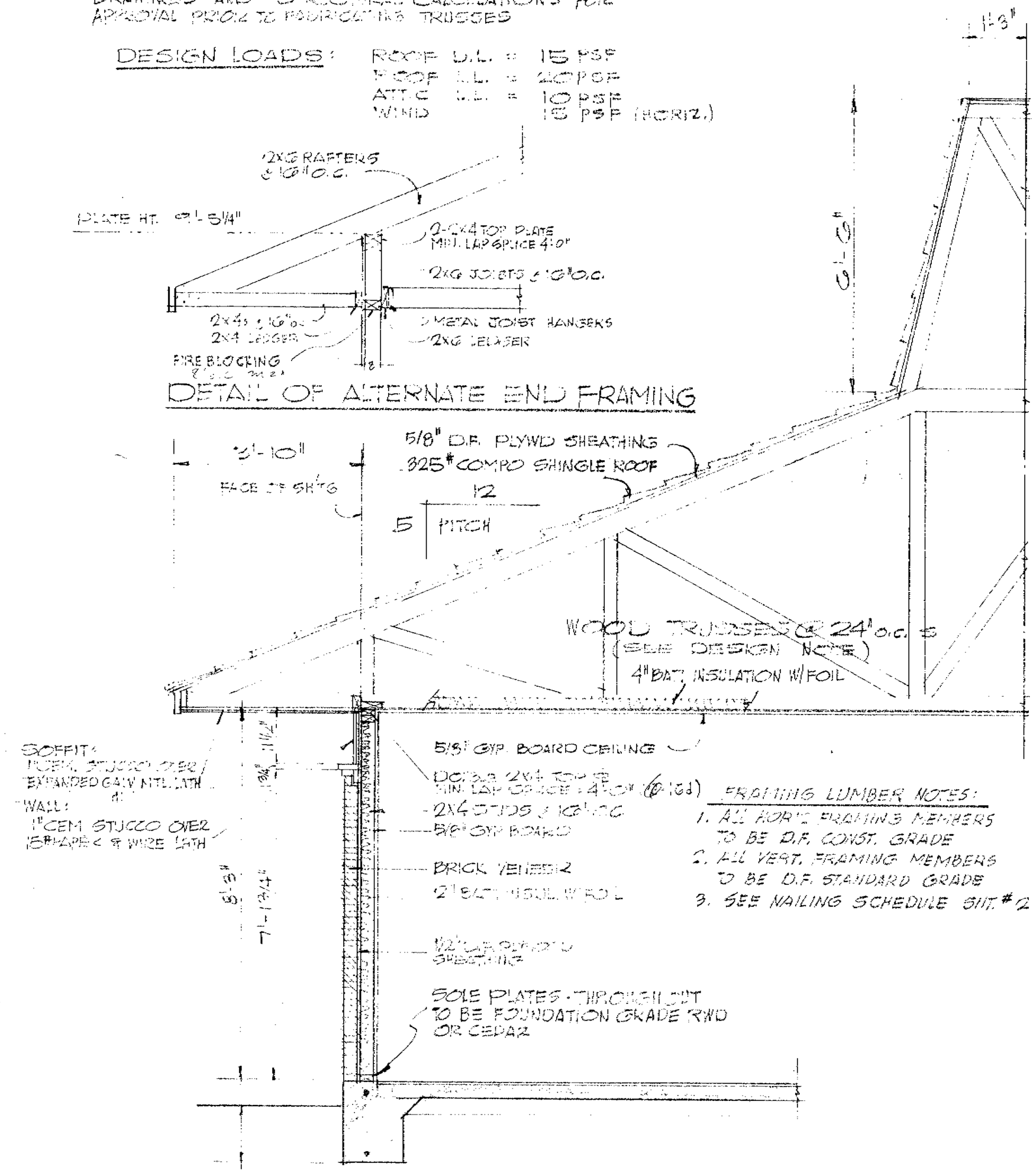

FRAMING LUMBER NOTES:

1. ALL HORIZ. FRAMING MEMBERS TO BE D.F. CONST. GRADE
2. ALL VERT. FRAMING MEMBERS TO BE D.F. STANDARD GRADE
3. SEE NAILING SCHEDULE SHT. #2

TYPICAL FRAMING SECTION

SCALE 1/8" = 1'-0"

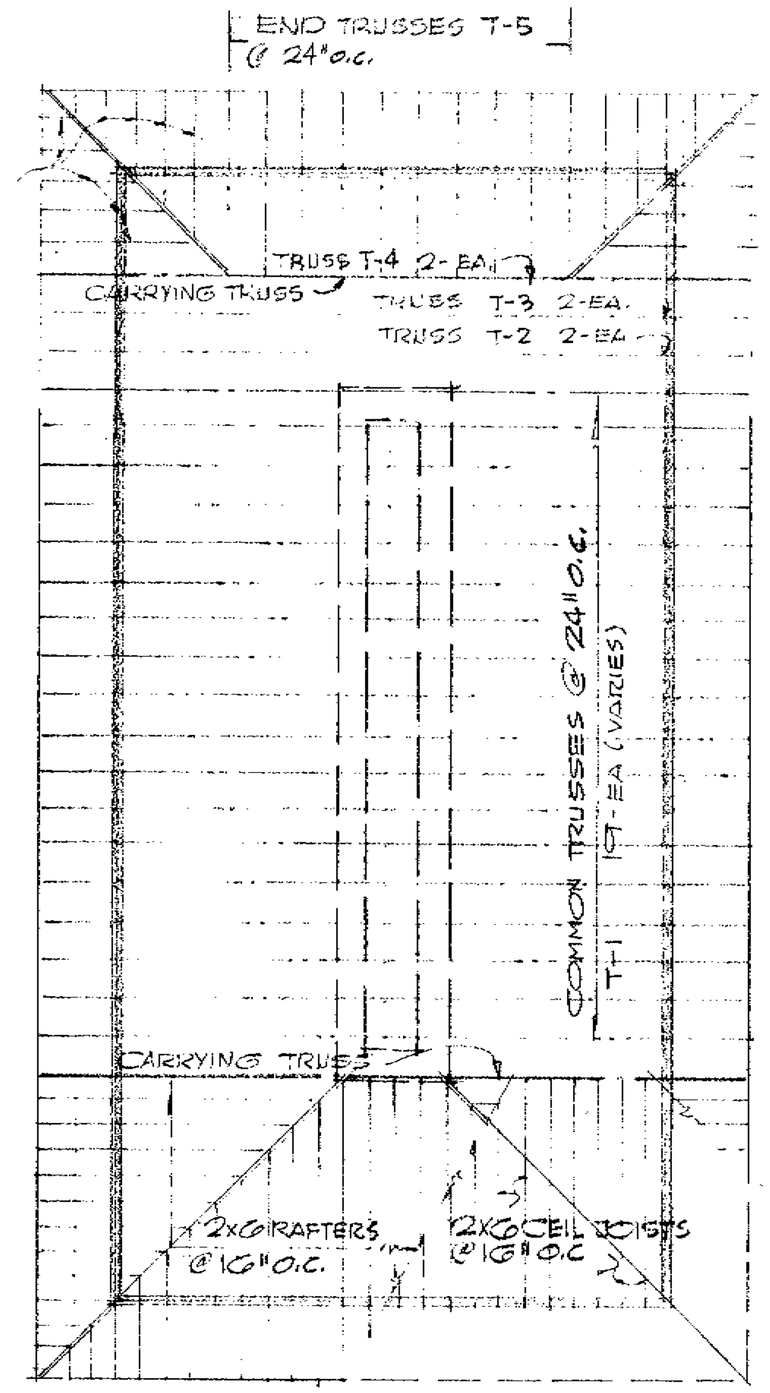

NOTE: BOTH ENDS OF BUILDING SHALL BE FRAMED THE SAME @ CONTRACTOR'S OPTION SHOP DRAWINGS SHALL BE PROVIDED.

ALTERNATE END FRAMING

ROOF FRAMING PLAN

SCALE 1/8" = 1'-0"

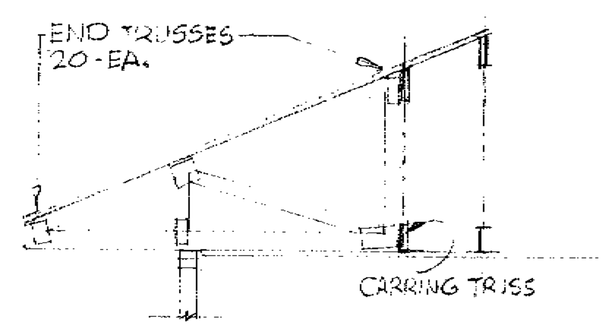

TYPICAL END TRUSS

SCALE 1/4" = 1'-0"

63664

5

REGISTERED PROFESSIONAL ENGINEER No 17506 CIVIL STATE OF CALIFORNIA

PIZZA HUT INC.

DRAWN: R.K.	DATE: 10/29/81	SHEET 4
	REV. NO.	
ROOF FRAMING		OF

Revised 12/7/89 RR

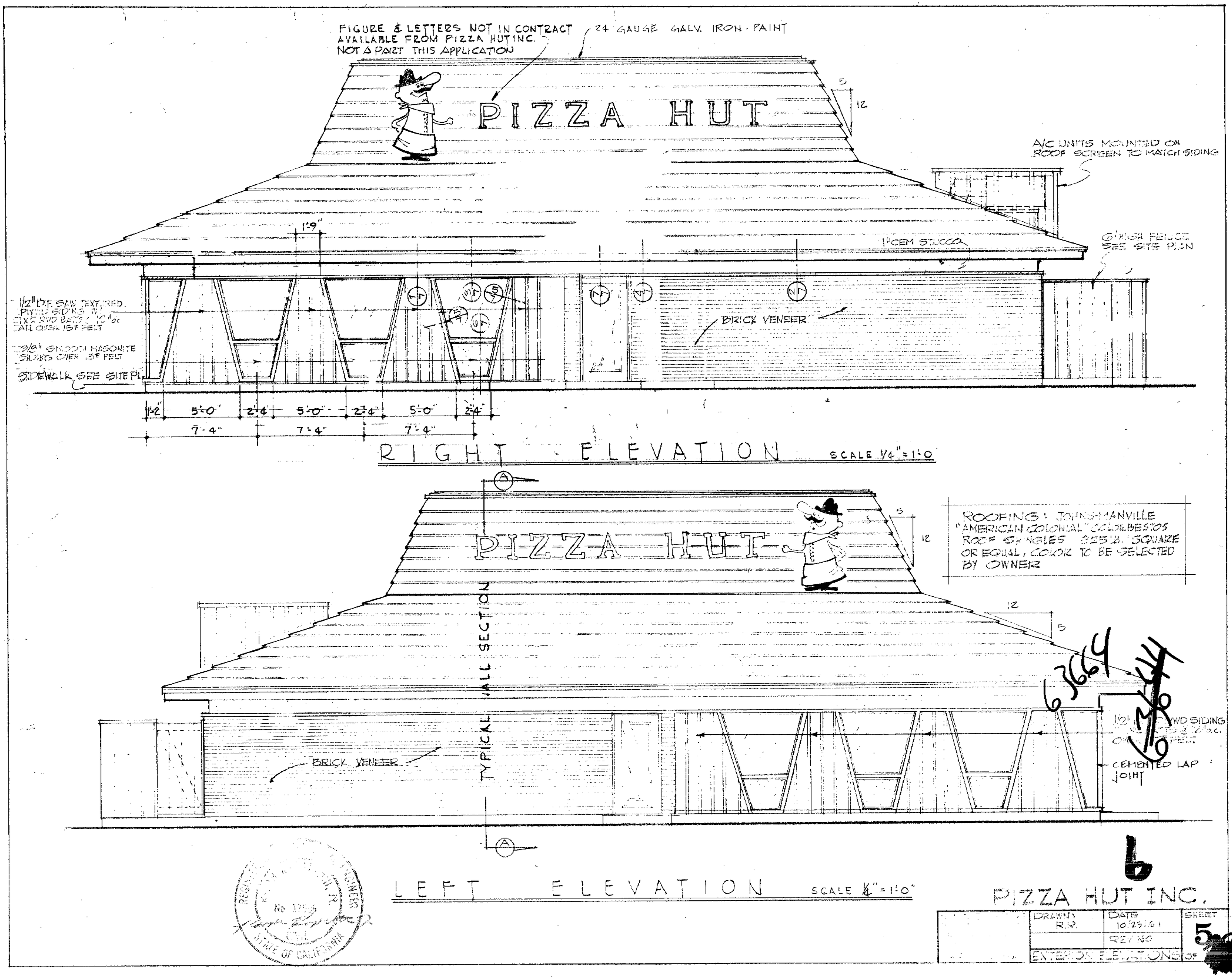
FIGURE & LETTERS NOT IN CONTRACT
AVAILABLE FROM PIZZA HUT INC.
NOT A PART THIS APPLICATION
24 GAUGE GALV. IRON - PAINT
PIZZA HUT
5
12
A/C UNITS MOUNTED ON ROOF SCREEN TO MATCH SIDING
1'-9"
1" CEM STUCCO
6' HIGH FENCE SEE SITE PLAN
1/2" D.F. SAW TEXTURED PLYWD SIDING W/ 1x2 RWD BATTS @ 12" o.c. ALL OVER 15# FELT
3/8" SMOOTH MASONITE SIDING OVER 15# FELT
SIDEWALK SEE SITE PL.
BRICK VENEER
1'-2"
5'-0"
2'-4"
5'-0"
2'-4"
5'-0"
2'-4"
7'-4"
7'-4"
7'-4"
RIGHT ELEVATION SCALE 1/4" = 1'-0"
A
PIZZA HUT
5
12
ROOFING: JOHNS-MANVILLE "AMERICAN COLONIAL" COLORBESTOS ROOF SHINGLES 325 LB. SQUARE OR EQUAL, COLOR TO BE SELECTED BY OWNER
12
5
TYPICAL WALL SECTION
BRICK VENEER
CEMENTED LAP JOINT
A
LEFT ELEVATION SCALE 1/4" = 1'-0"
6
PIZZA HUT INC.
DRAWN: R.R.
DATE 10/23/61
REV NO
SHEET 5
EXTERIOR ELEVATIONS
OF

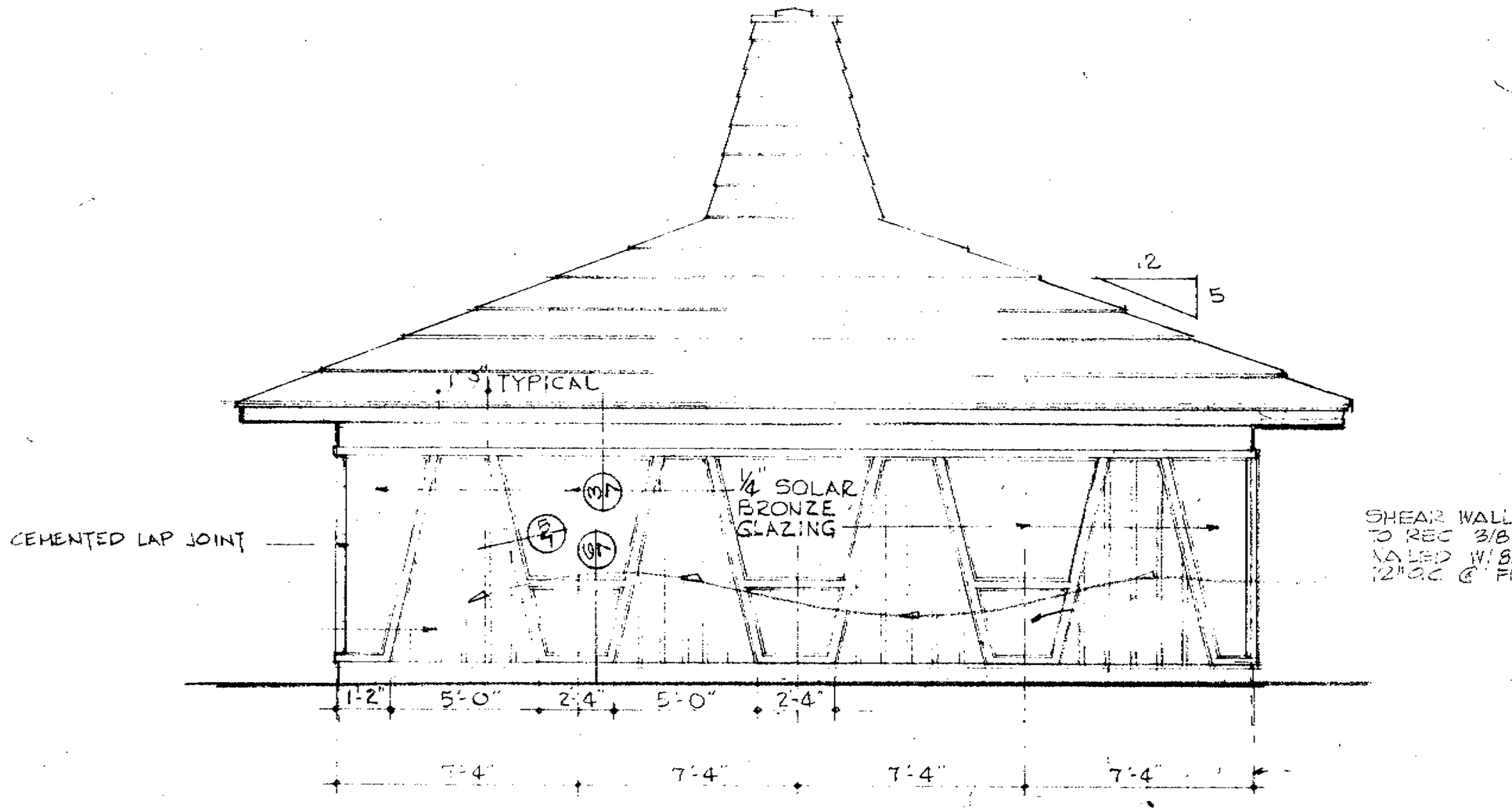

FRONT ELEVATION SCALE 1/4" = 1'-0"

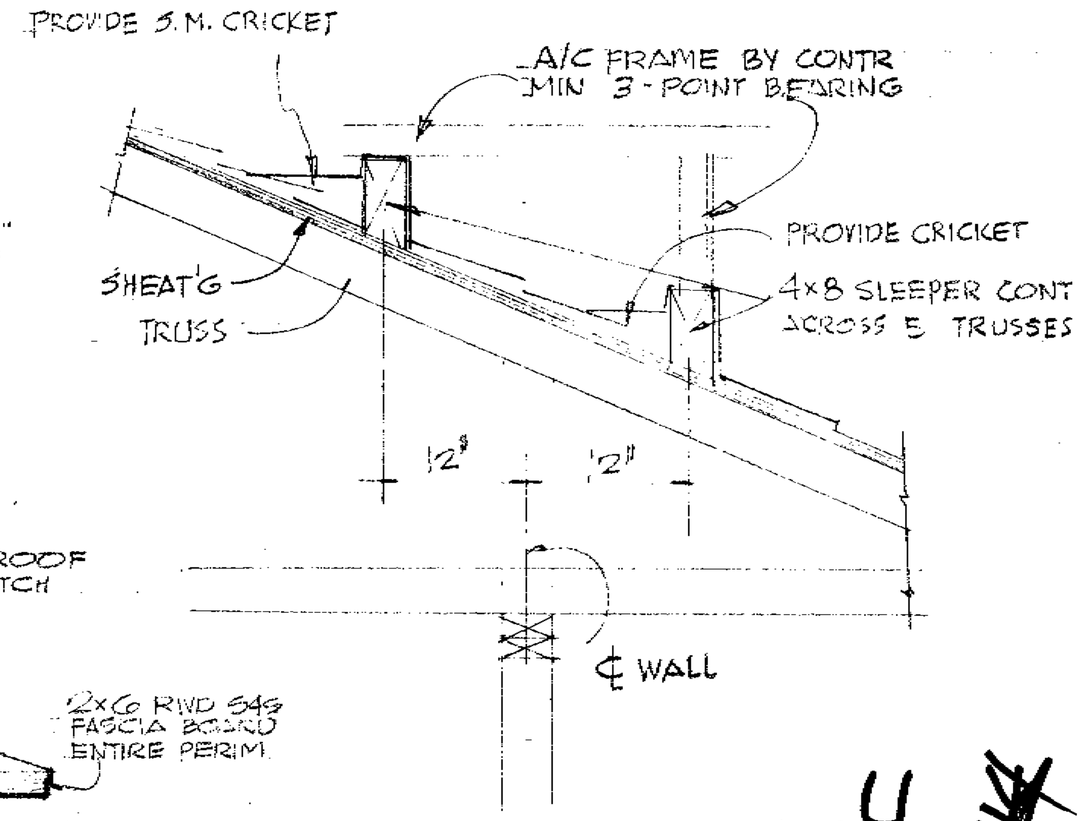

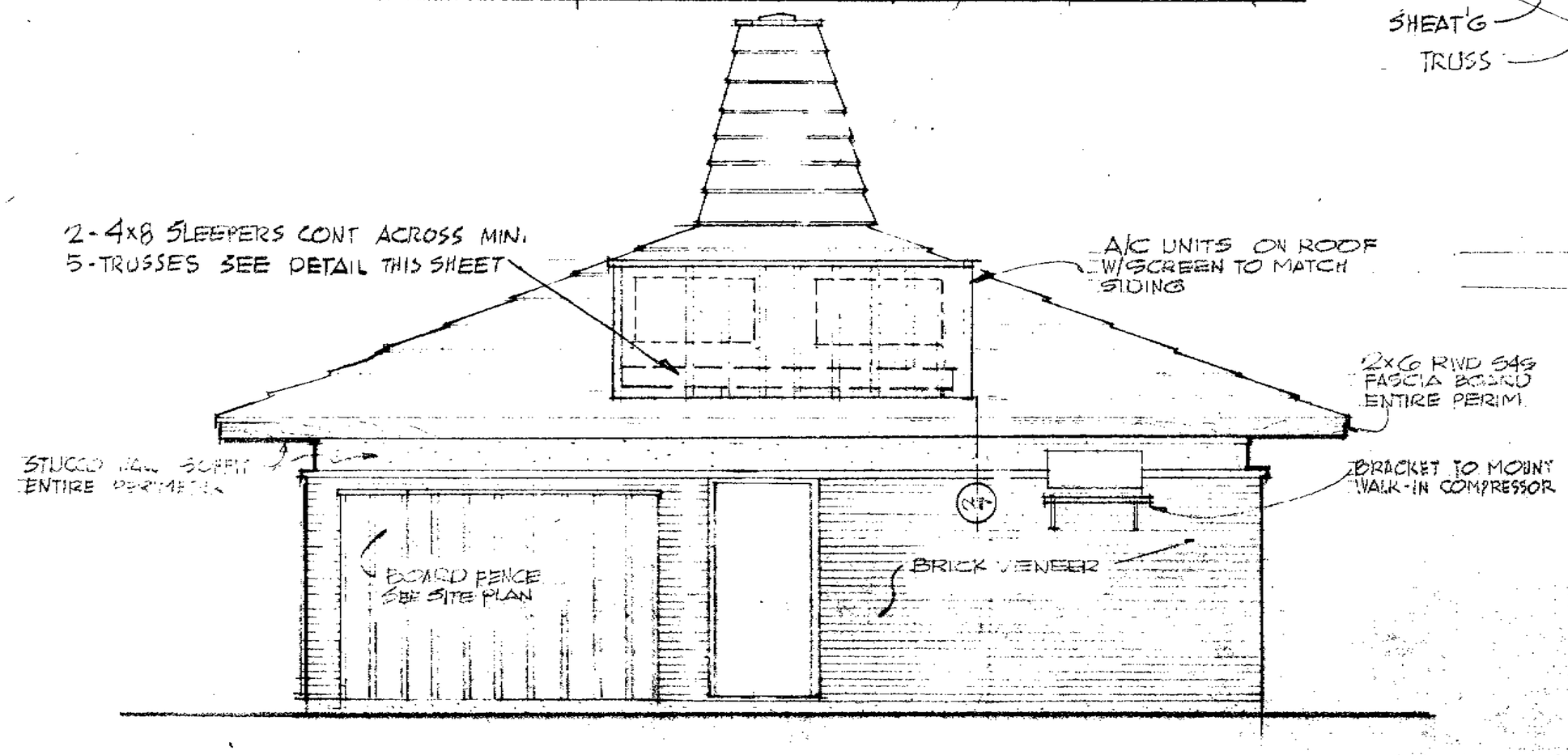

REAR ELEVATION SCALE 1/4" = 1'-0"

63664

REGISTERED PROFESSIONAL ENGINEER RALPH RAPATTONI JR. No 17506 CIVIL STATE OF CALIFORNIA

7

PIZZA HUT INC.

Ralph Rapattoni Consulting Engineer 344 Wilson Drive Los Gatos, Calif.	DRAWN R.R.	DATE 10/23/69	SHEET 6
		REV. NO.	
	EXTERIOR ELEVATIONS		OF 18

Revised 12/4/69 RR

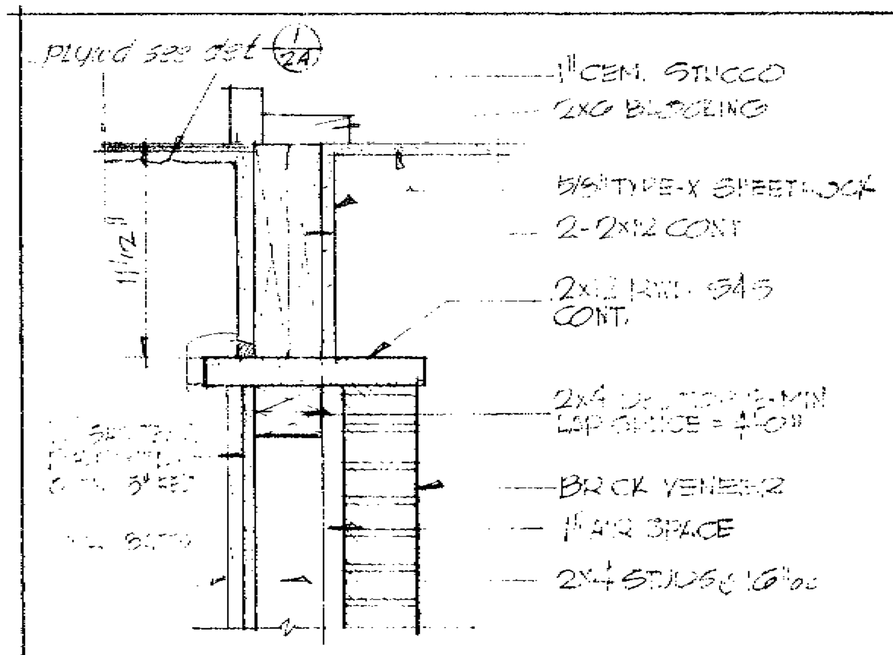

DETAIL 1/7

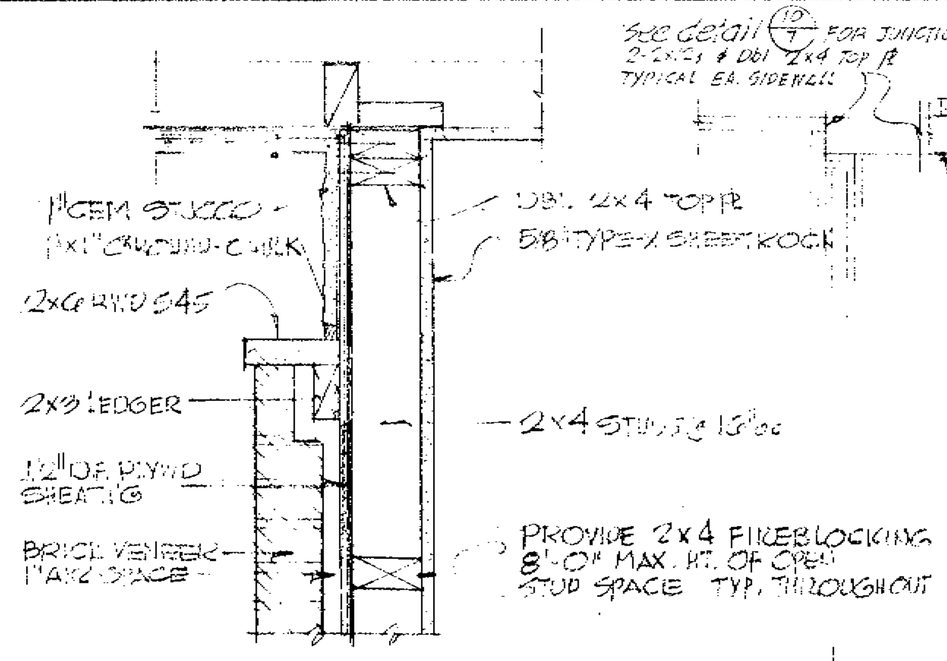

DETAIL 2/7

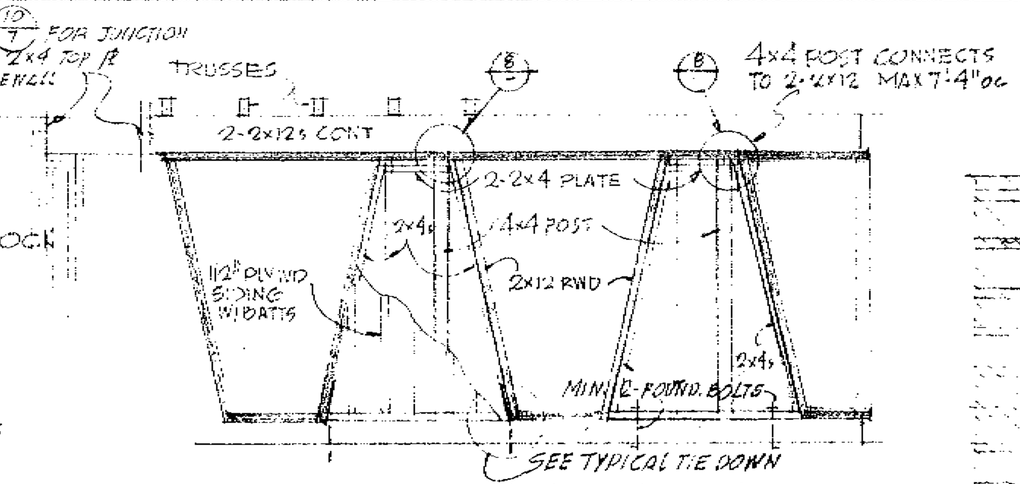

TYPICAL WALL FRAMING
SCALE 1/4" = 1'-0"

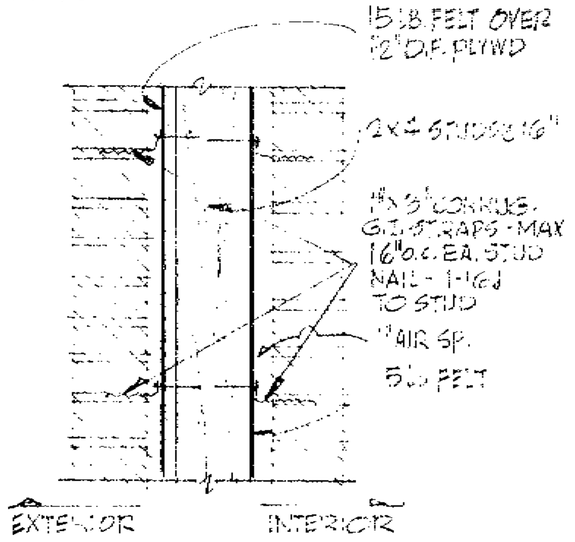

TYPICAL MASONRY VENEER APPLICATION

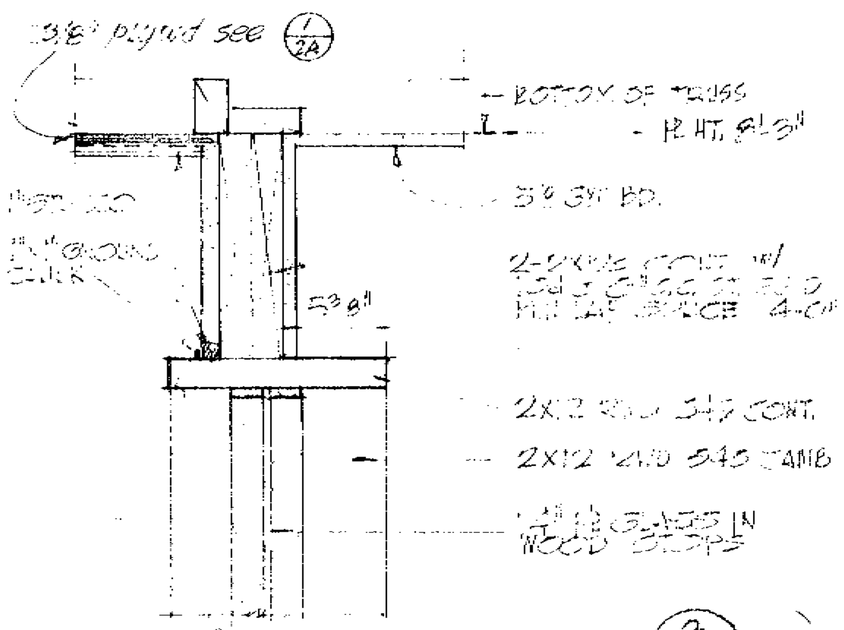

WINDOW HEAD 3/7

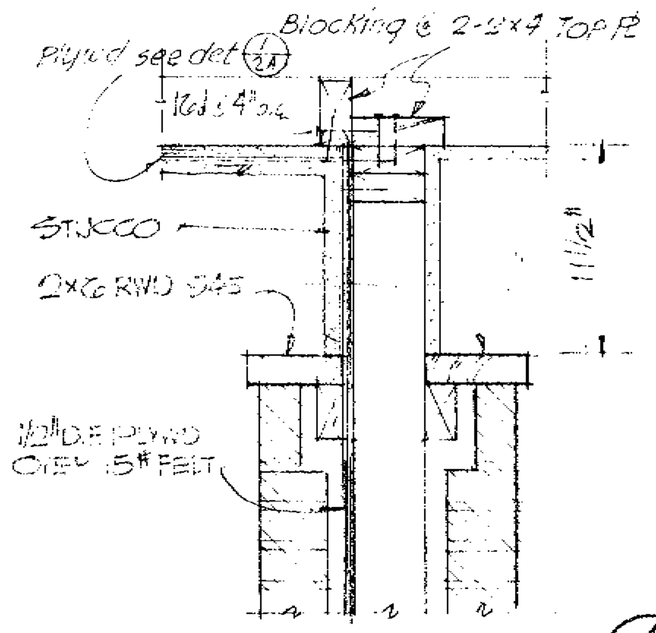

DETAIL 4/7

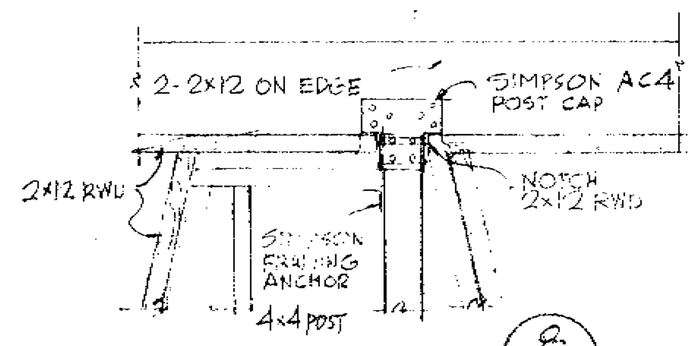

DETAIL 8/7

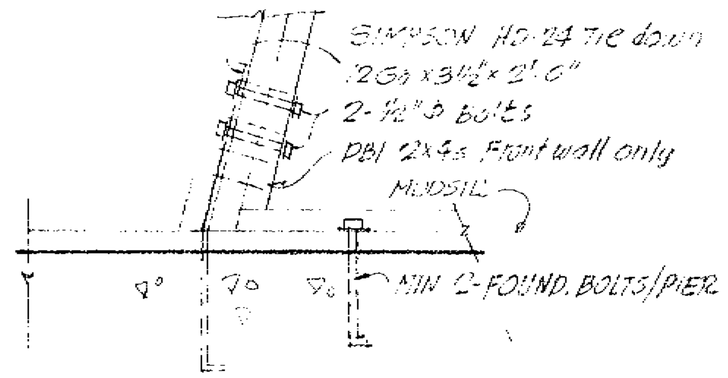

TYPICAL TIE DOWN DETAIL
FRONT WALL ONLY 3-PLACES

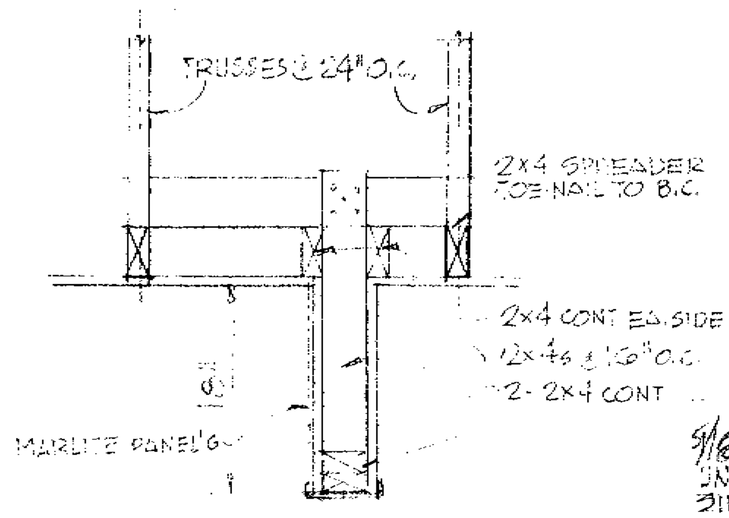

DETAIL 9/7

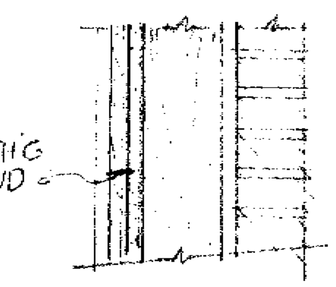

DETAIL

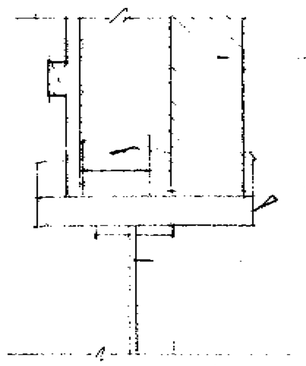

WINDOW JAMB 5/7

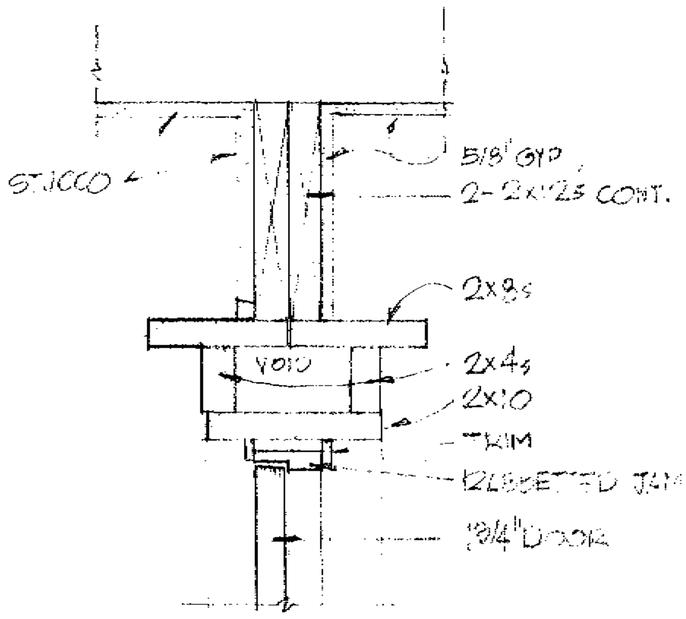

DETAIL 7/7

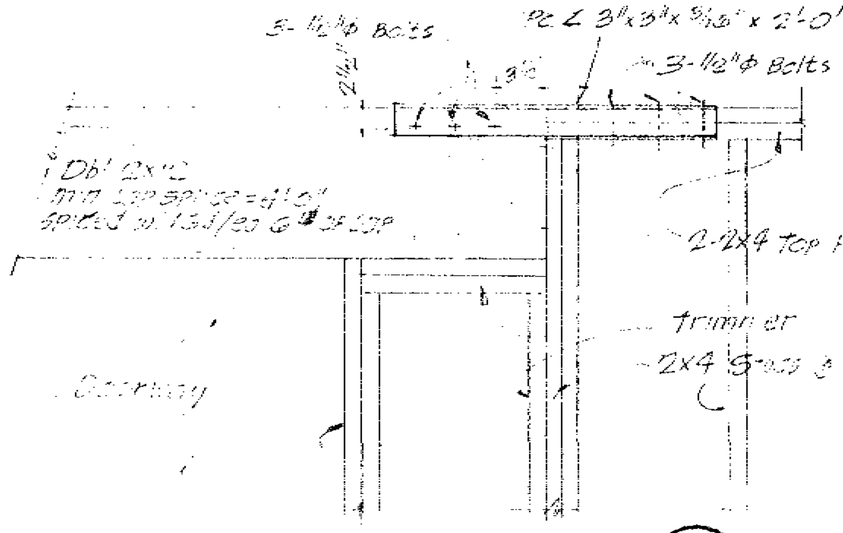

CHORD TIE (DBL 2x10 - 2-2x4 TOP PL)
TYPICAL 2-PLACES
10/7

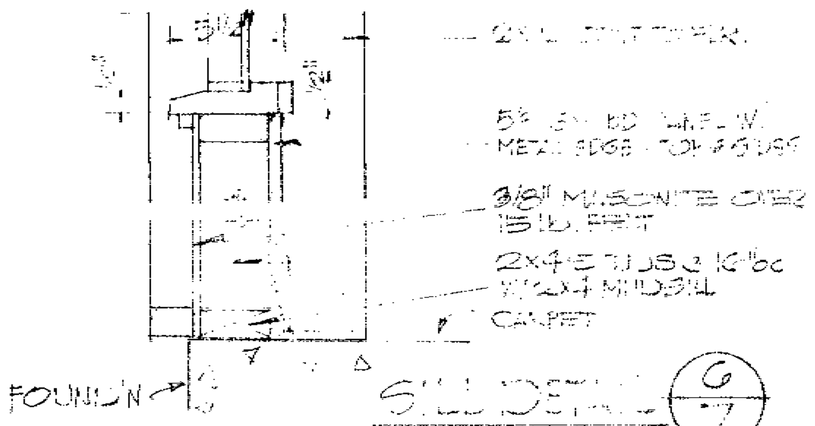

SILL DETAIL 6/7

WALL SECTIONS
SCALE 1 1/2" = 1'-0"

NOTE: SEE EXTERIOR ELEV.

REVISED 12/4/69 RR

63664

8

REGISTERED PROFESSIONAL ENGINEER
RALPH W. PATTERSON
No. 17535
CIVIL
STATE OF CALIFORNIA

PIZZA HUT INC.

DRAWN: R.R.	DATE: 10/23/69	SHEET 7
	REV NO.	
MISC. DETAILS		OF

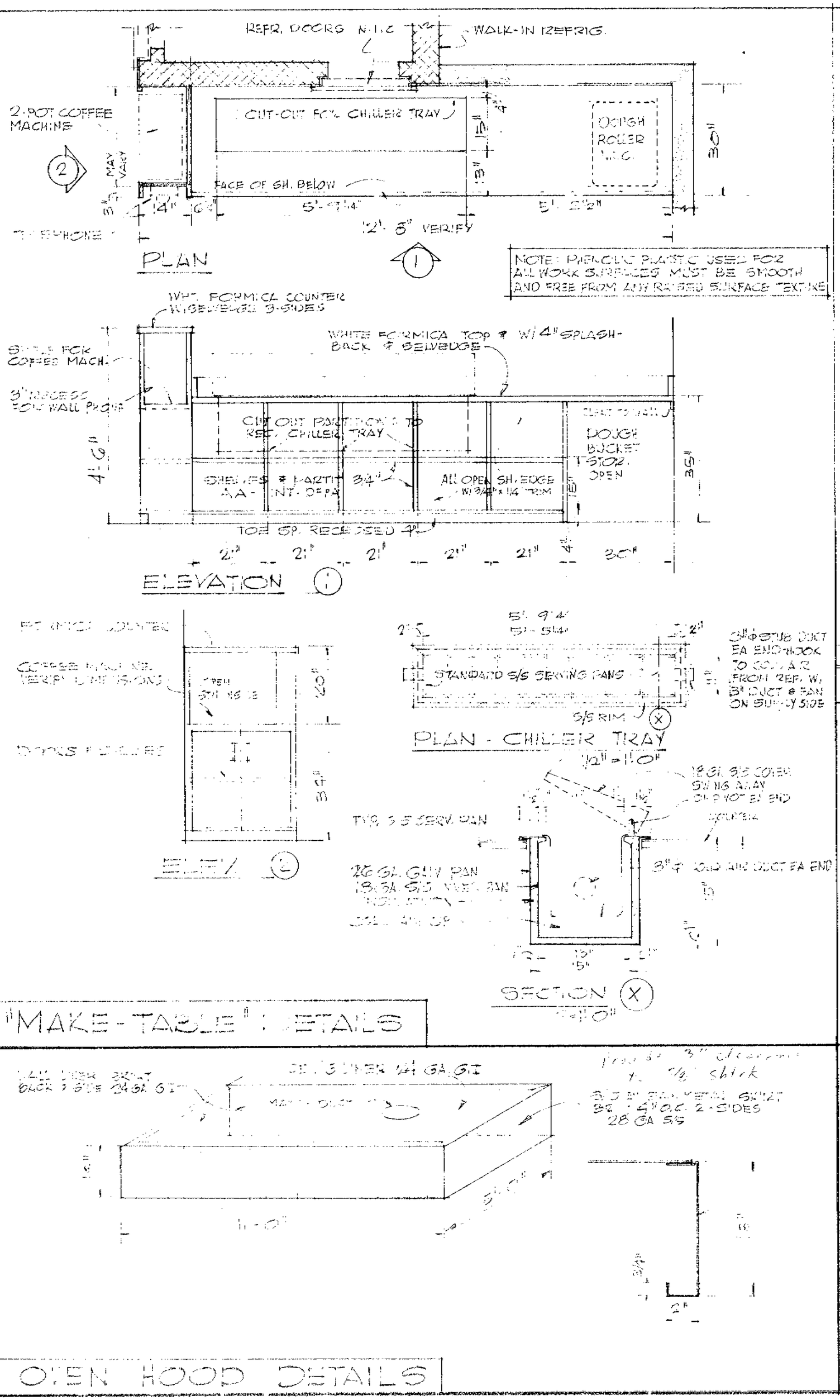
REFR. DOORS N.T.S.
WALK-IN REFRIG.
2-POT COFFEE MACHINE
CUT-OUT FOR CHILLER TRAY
DOUGH ROLLER N.T.S.
FACE OF SH. BELOW
TELEPHONE
PLAN
NOTE: PHENOLIC PLASTIC USED FOR ALL WORK SURFACES MUST BE SMOOTH AND FREE FROM ANY RAISED SURFACE TEXTURE
WHT. FORMICA COUNTER W/BELVEDERE 3-SIDES
WHITE FORMICA TOP & W/4" SPLASH-BACK & BELVEDERE
DOUGH BUCKET STOR. OPEN
ALL OPEN SH. EDGE
TOE SP. RECESSED 4"
ELEVATION
FORMICA COUNTER
COFFEE MACHINE
ELEV.
STANDARD S/S SERVING PANS
S/S RIM
PLAN - CHILLER TRAY
TYP. S.S. SERV. PAN
SECTION
"MAKE-TABLE" DETAILS
OVEN HOOD DETAILS

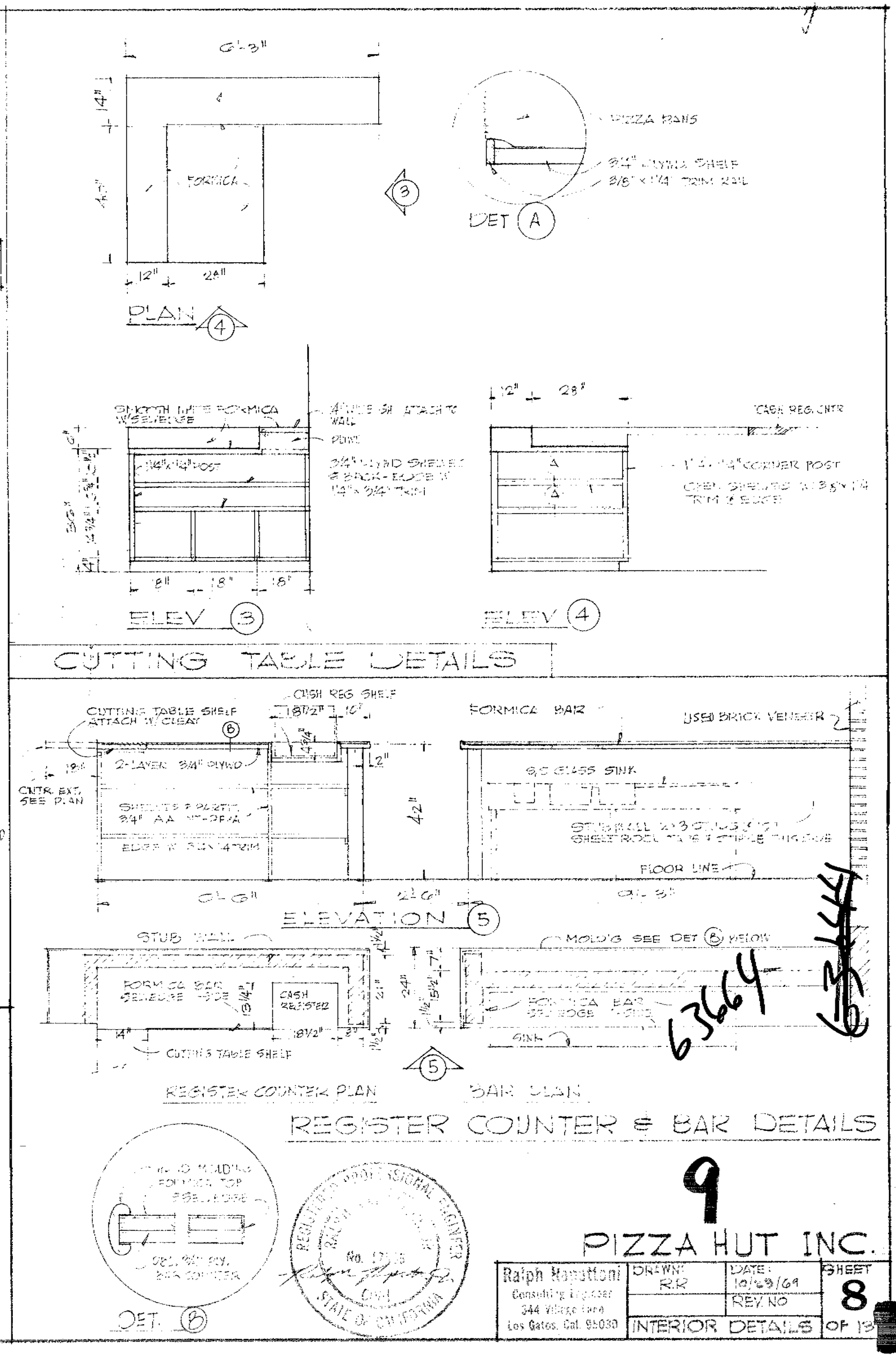
6'-3"
FORMICA
PLAN
PIZZA PANS
DET. A
SMOOTH WHITE FORMICA W/BELVEDERE
ELEV.
CASH REGISTER
ELEV.
CUTTING TABLE DETAILS
CUTTING TABLE SHELF ATTACH W/CLEAT
CASH REG SHELF
FORMICA BAR
USED BRICK VENEER
2-LAYER 3/4" PLYWD
S/S GLASS SINK
FLOOR LINE
ELEVATION
STUB WALL
FORMICA BAR BELVEDERE 3-SIDE
CASH REGISTER
CUTTING TABLE SHELF
MOLD'G SEE DET. B BELOW
REGISTER COUNTER PLAN
BAR PLAN
REGISTER COUNTER & BAR DETAILS
DET.
6364
9
PIZZA HUT INC.
Ralph Hopstone
Consulting Engineer
344 Village Lane
Los Gatos, Cal. 95030
DRAWN: R.R.
DATE: 10/29/69
REV. NO
SHEET 8 OF 19
INTERIOR DETAILS

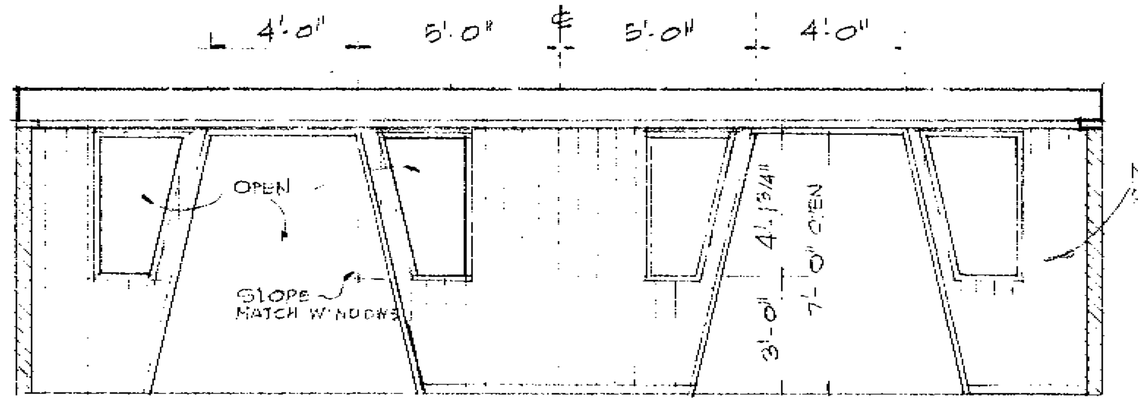

OPTIONAL SCREEN WALL DINING ROOM 1/9

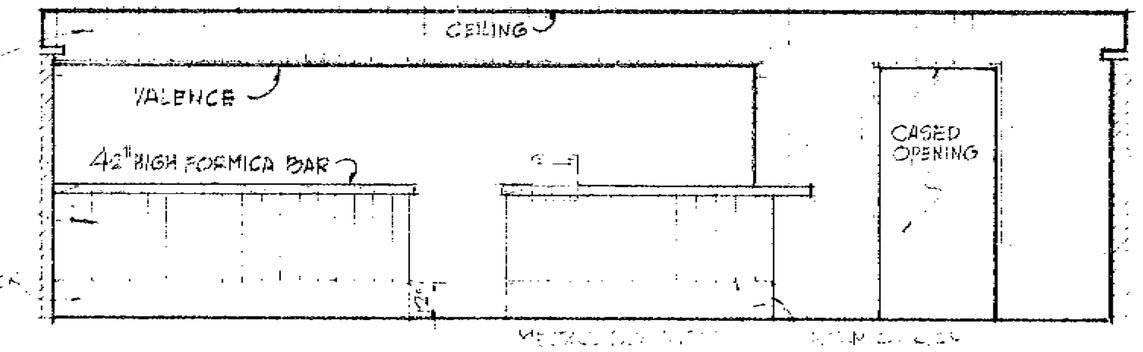

BAR & SERVING AREA - DINING ROOM 2/9

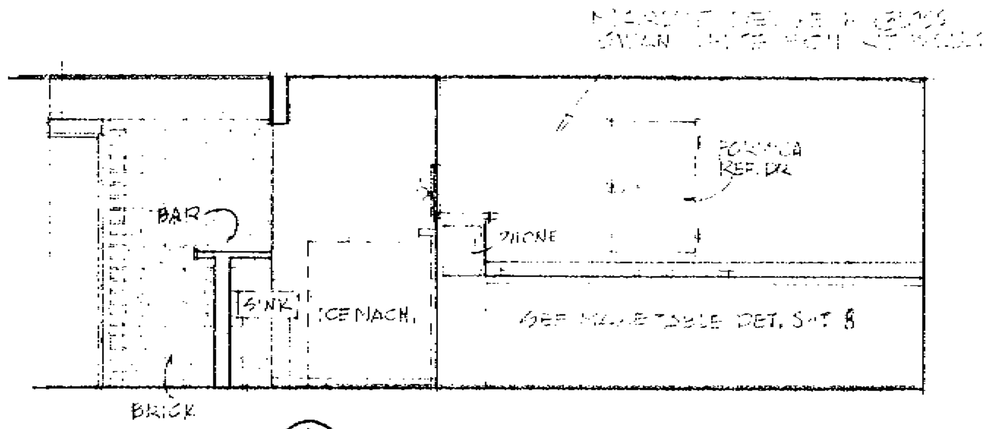

KITCHEN 3/9 LEFT ELEV.

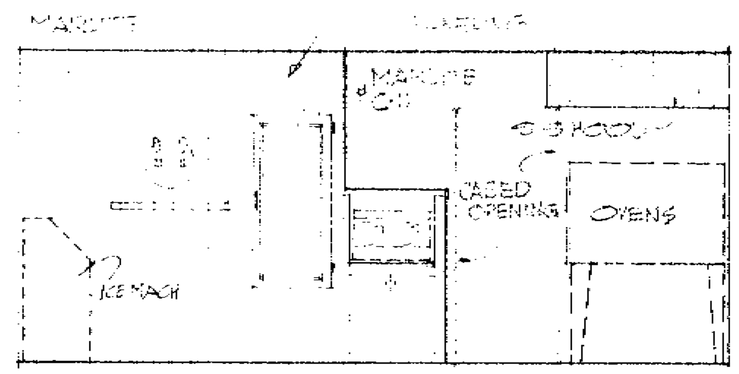

KIT-SERVING 4/9 REAR ELEV

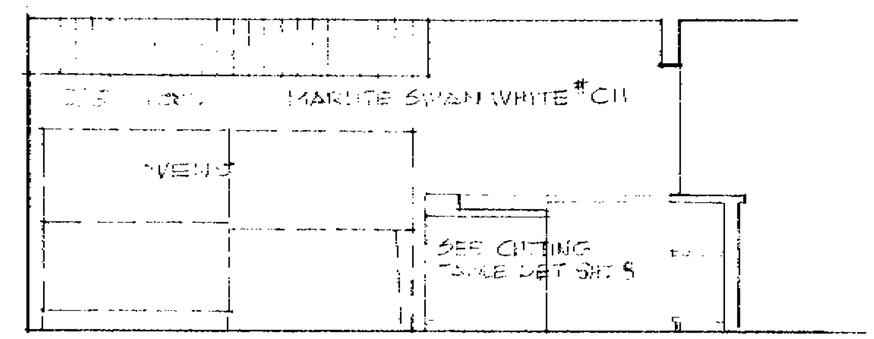

KITCHEN 5/9 RIGHT ELEVATION

INTERIOR ELEVATIONS SCALE 1/4"=1'-0"

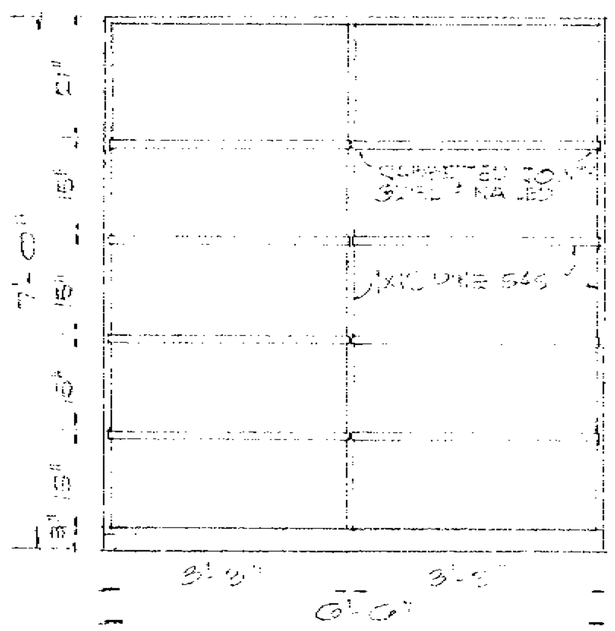

PORTABLE SHELVING
1/2"=1'-0"

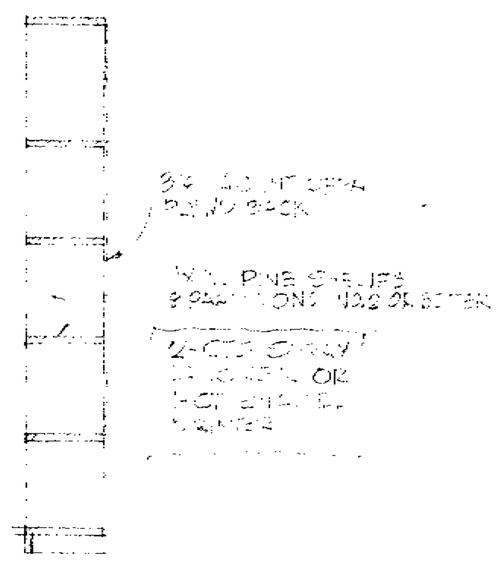

END

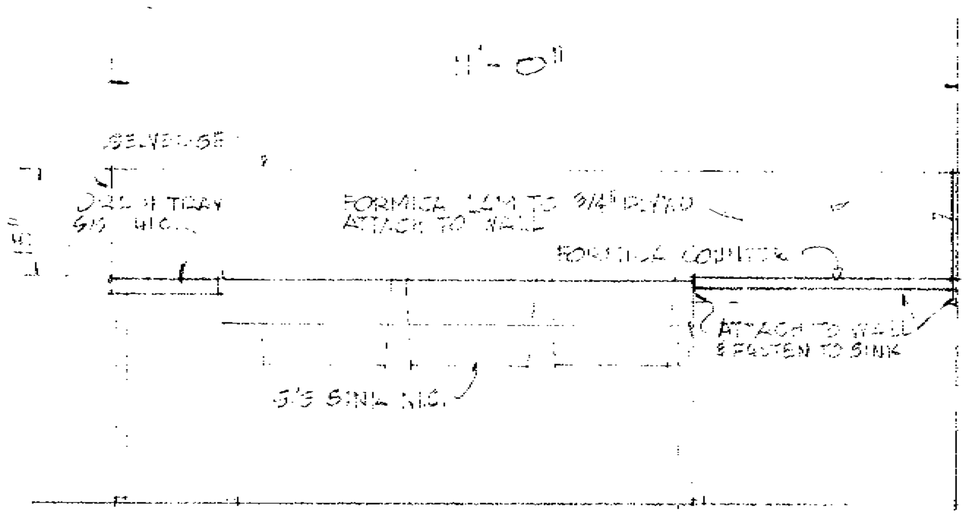

SINK - CLEAN-UP ROOM
1/2"=1'-0"

63664

10

PIZZA HUT INC.

Ralph Rapattoni Consulting Engineer 364 Village Lane Los Gatos, Cal. 95030	DRAWN: R.R.	DATE: 10/23/69 REV. NO	SHEET 9 OF
	INTERIOR ELEVATIONS		

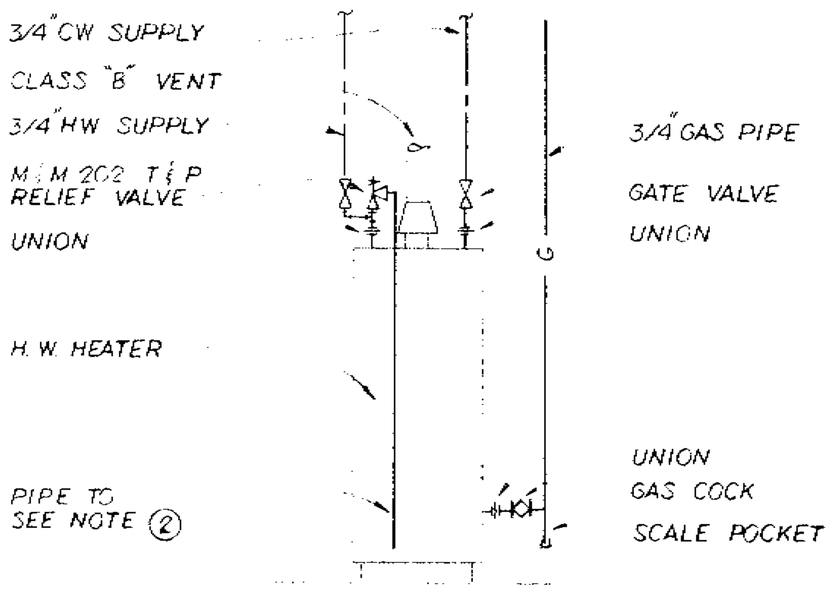

WATER HEATER PIPING DETAIL

No Scale

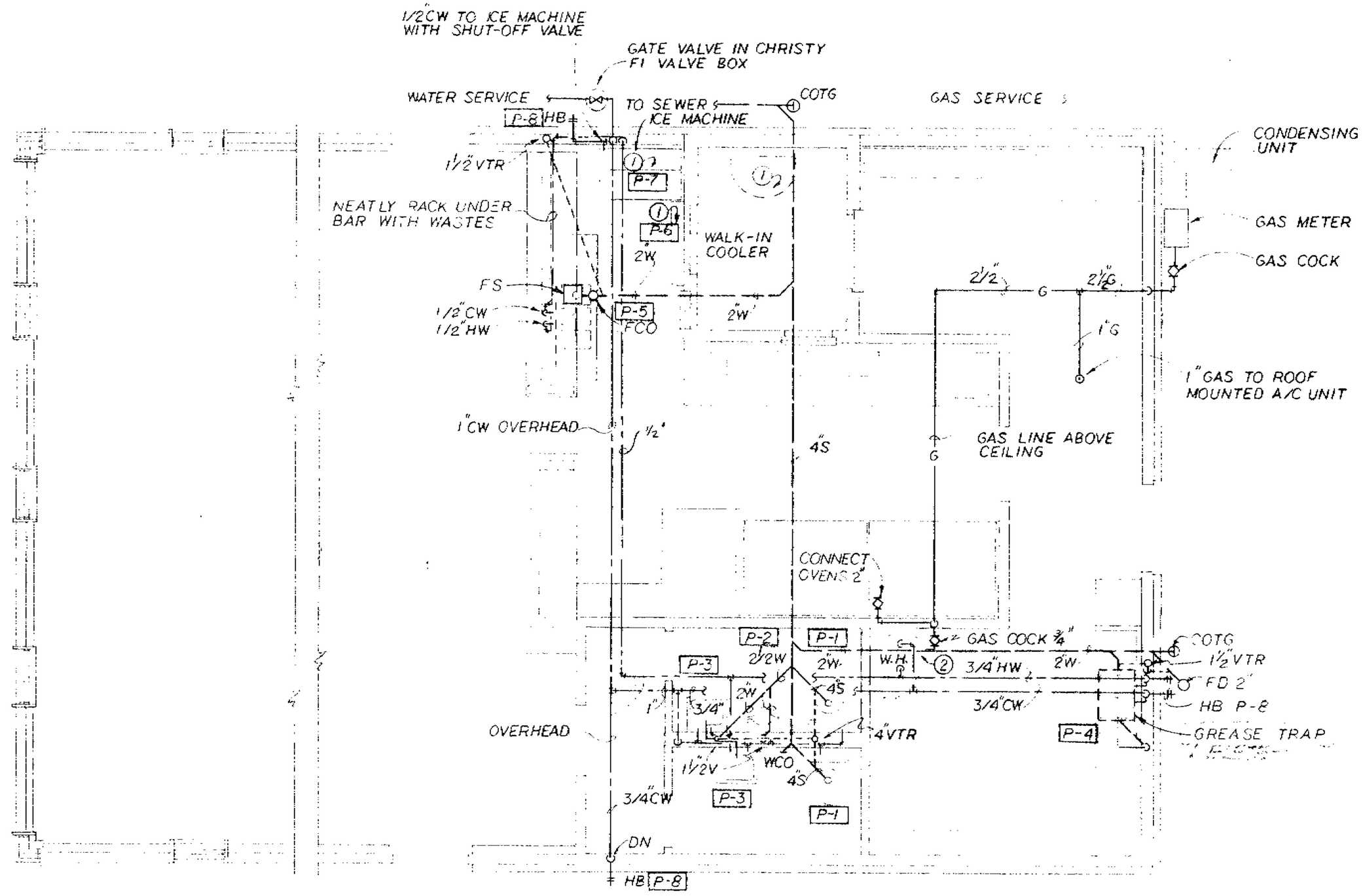

PLUMBING PLAN

Scale 1/4" = 1'-0"

LEGEND

SYMBOL	DESCRIPTION
	SOIL OR WASTE ABOVE GRADE
	SOIL OR WASTE BELOW GRADE
	VENT
	CW DOMESTIC COLD WATER
	HW DOMESTIC HOT WATER
COTG	CLEANOUT TO GRADE
WCO	WALL CLEANOUT
V	VENT
VTR	VENT THRU ROOF
	GATE VALVE
	PLUG VALVE OR GAS COCK
HB	HOSE BIBB
	UNION
	PIPE UP
	PIPE DOWN
FD	FLOOR DRAIN
WH	WATER HEATER
G	GAS
P1	FIXTURE NUMBER
(1)	NOTE NUMBER
FS	FLOOR SINK
FCO	FLOOR CLEANOUT

FIXTURE SCHEDULE

TAG	DESCRIPTION	BRANCH S W	V	CW	HW	REMARKS
P-1	WATER CLOSET	4	2	1/2	–	
P-2	URINAL	2	1 1/2	3/4	–	
P-3	LAVATORY	2	1 1/2	1/2	1/2	
P-4	POT SINK	2	1 1/2	1/2	1/2	
P-5	BAR SINK	2	–	1/2	1/2	INDIRECT WASTE
P-6	BEER TRAY	1/2	–	–	–	" "
P-7	ICE MACHINE	1/2	–	1/2	–	" "
P-8	HOSE BIBB	–	–	3/4	–	

NOTES

(1) COPPER CONDENSATE DRAIN RUN TO FLOOR SINK. CONCEAL NEATLY IN WALLS & RACK UNDER BAR

(2) WATER HEATER RELIEF DRAIN PIPE TO OUTSIDE.

63664

63644

PIZZA HUT INC

	Drawn by: GT	Date: 10/23/89	SHEET 10 OF
		Rev:	
	PLUMBING PLAN		

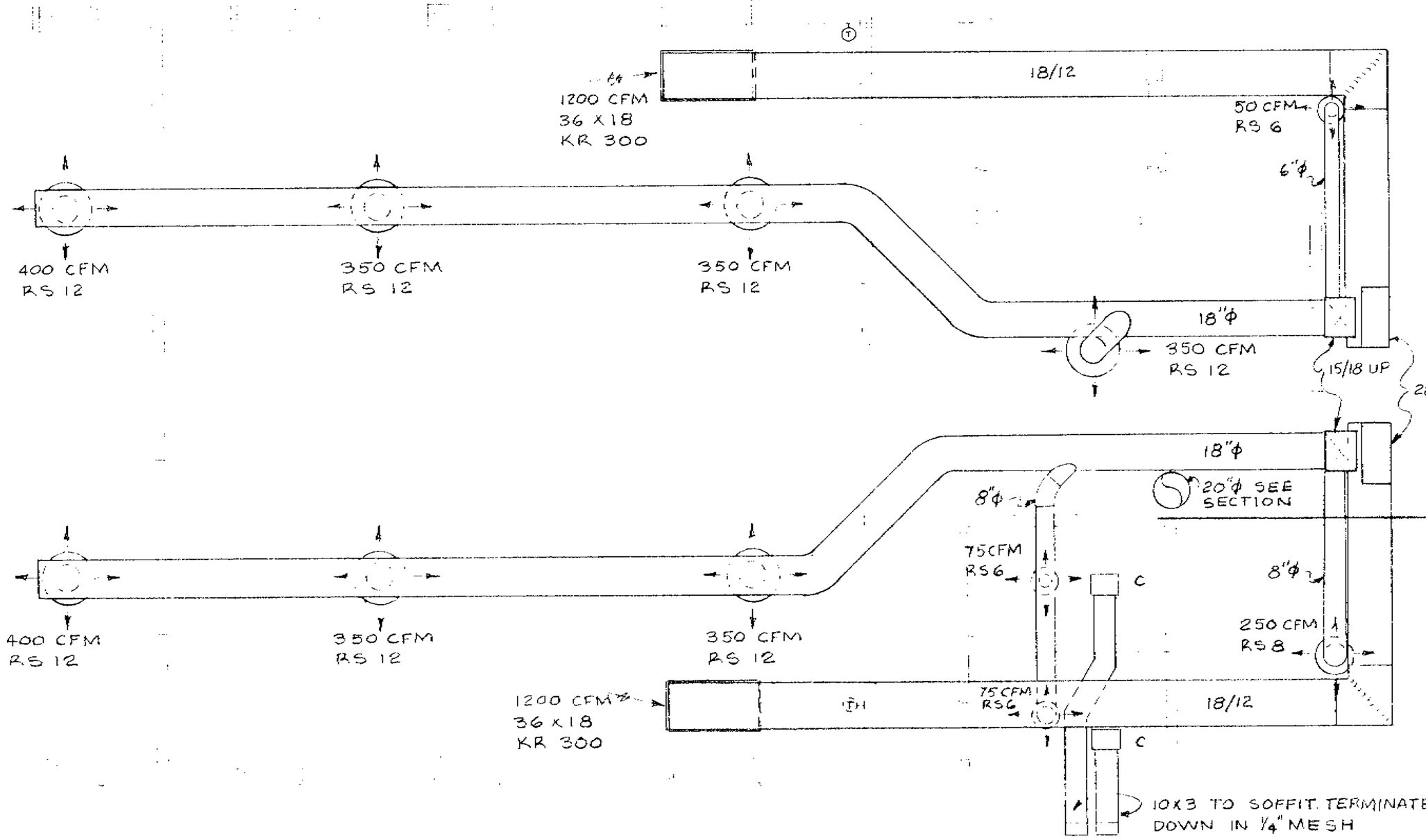

MECHANICAL PLAN
SCALE: 1/4" = 1'-0"

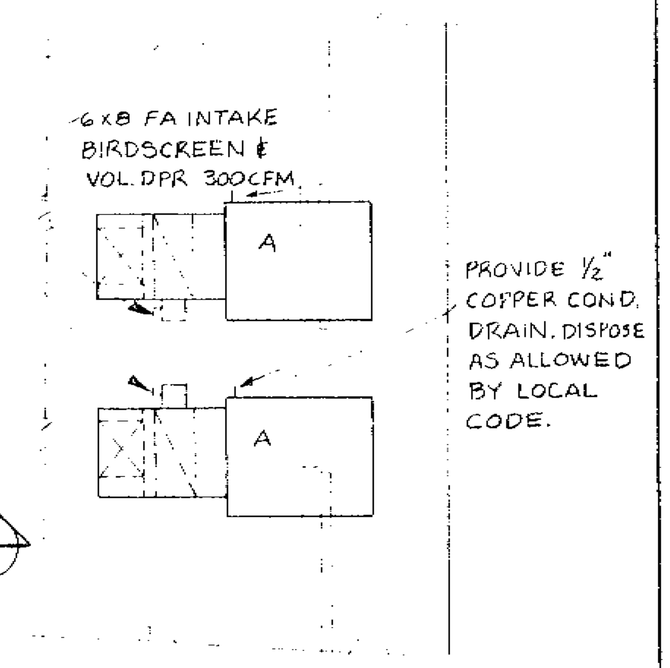

PART. ROOF PLAN
SCALE: 1/4" = 1'-0"

EQUIPMENT SCHEDULE		
TAG	DESCRIPTION	ELEC. CHAR.
A	A/C UNIT CARRIER 48DC 005 1500 CFM @ 0.4" EXT SP COMPLETE WITH FILTERS & REMOTE CONTROL CENTER.	230V, 1φ 40.4 A
B	EXHAUST FAN CHAMPION #3 PIGGY-BAK VENT SET @900 CFM 1/4"	120V, 1φ 1/2 HP
C	TOILET EXHAUST PENN Z-60	120V, 1φ

NOTE: 1. DIFFUSERS & RETURNS SHALL BE ADP
2. DUCTS INSIDE SHALL BE "FIBERGLAS" ROUND. EXTERIOR DUCTS SHALL BE LINED W/1" MATTE FACED LINER.
3. PAINT DUCT INTERIOR & OUTLETS FLAT BLACK.

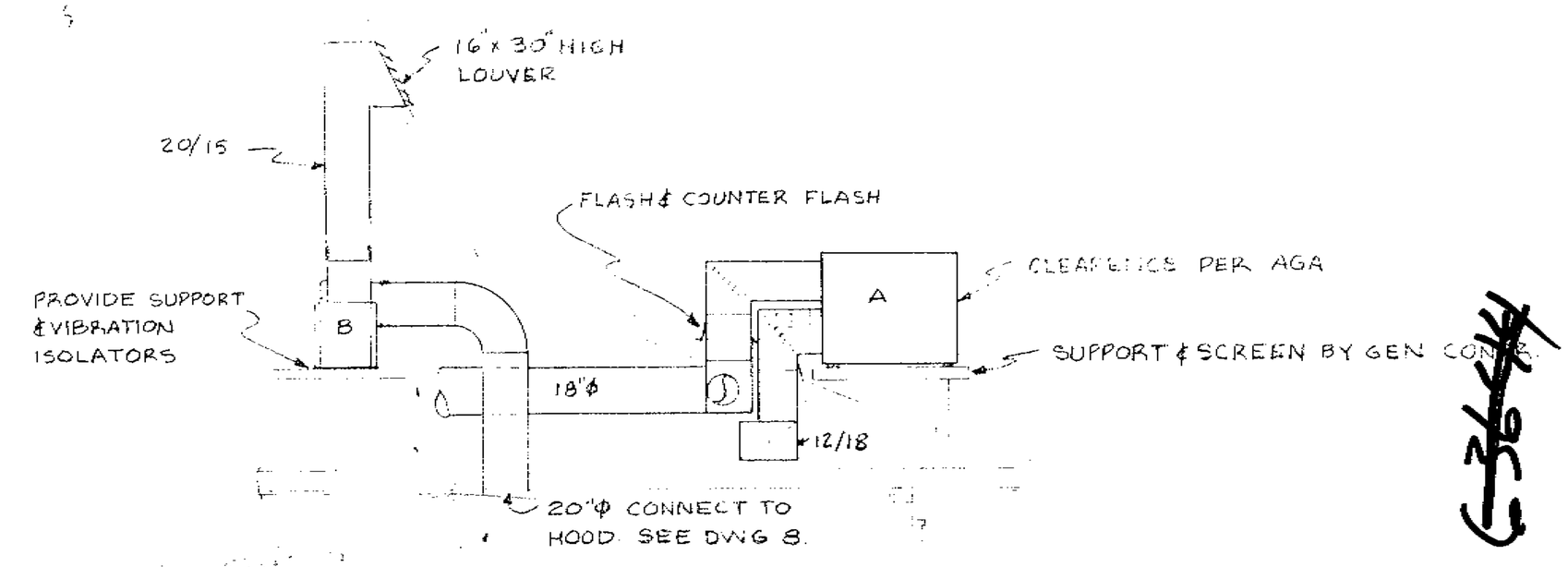

SECTION A/11
SCALE: 1/4" = 1'-0"

63664
12

PIZZA HUT INC

Drawn by: ME	Date: 1/3/69	SHEET 11
	Rev:	
MECHANICAL PLAN		

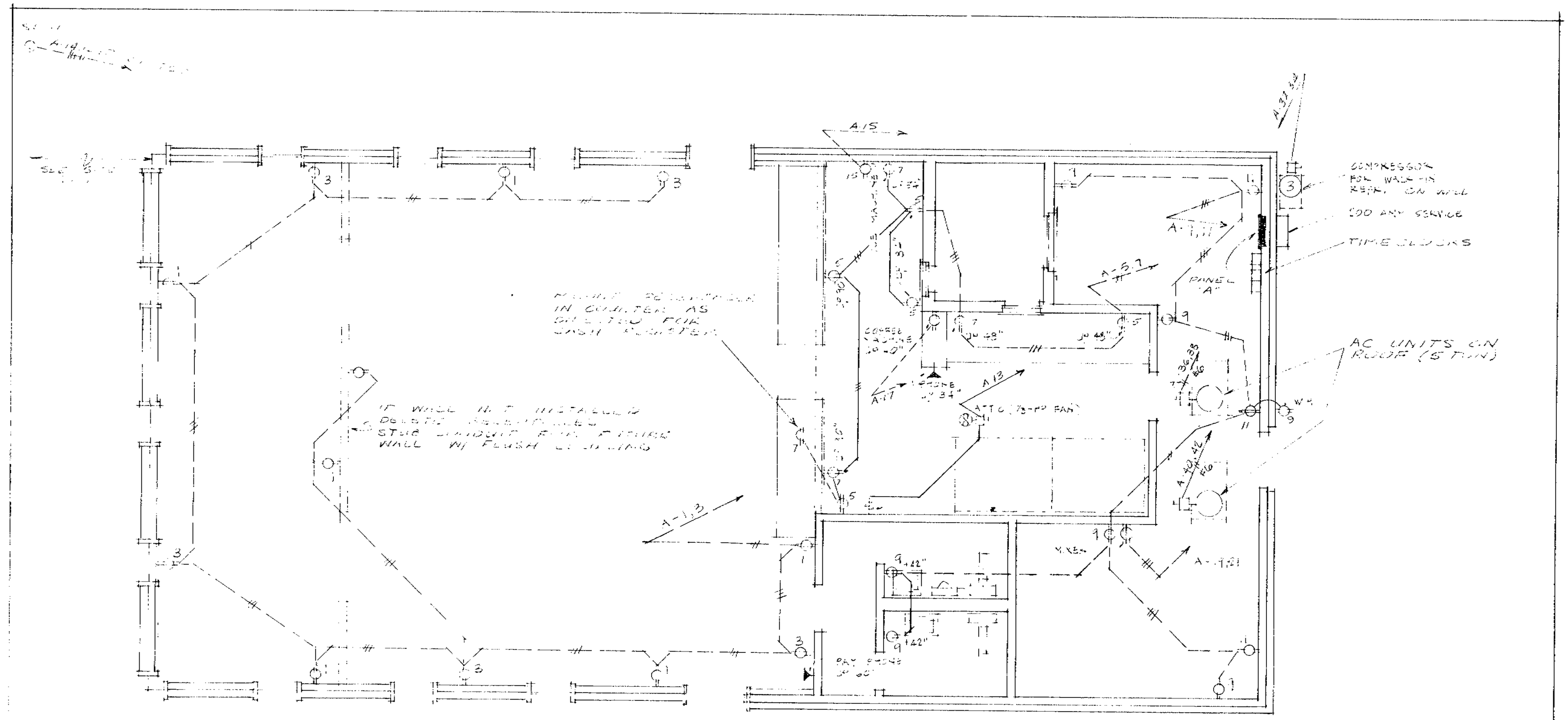

POWER PLAN

SCALE 1/4" = 1'-0"

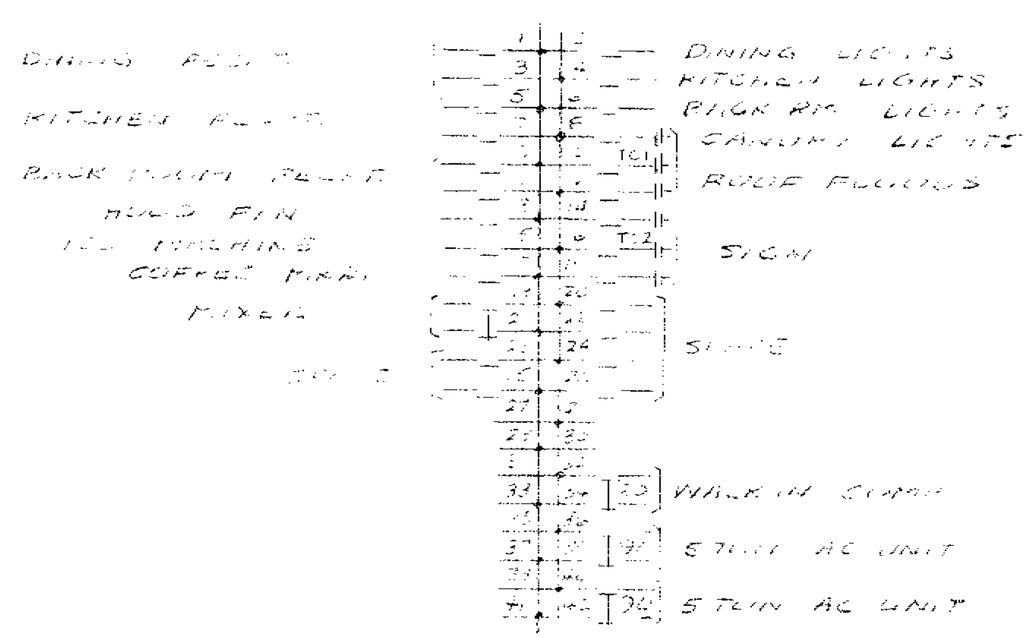

PANEL "A"

QO 42 FLUSH

LOAD SUMMARY

LIGHTS	11 KW
ROOF	5 KW
KITCHEN APPL.	7 KW
AC UNITS	21 KVA
TOTAL	44 KVA
AT 1Ø 3W 240V	183 AMPS

(AT 3Ø 4W 208V - 122A)

120/240V - 3W 1Ø SERVICE IS SHOWN FOR 120, 240V - 4W 3Ø DELTA OR 120/208V - 4W - 3Ø WYE SERVICE CONSULT ENGINEER.

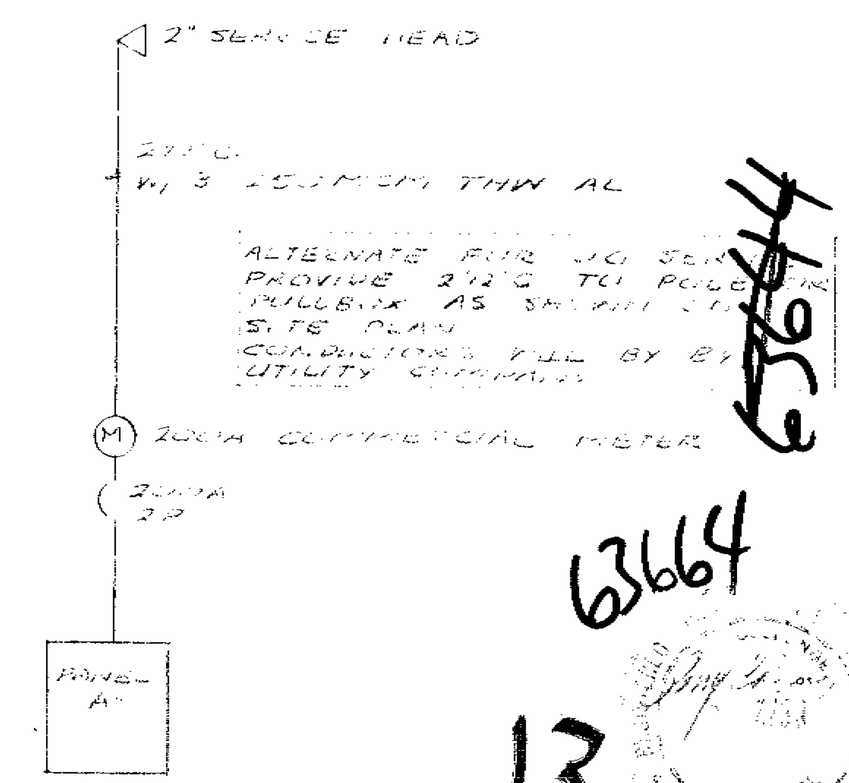

FEEDER DIAGRAM

63664

13

ELECTRICAL PLAN

SHEET 12

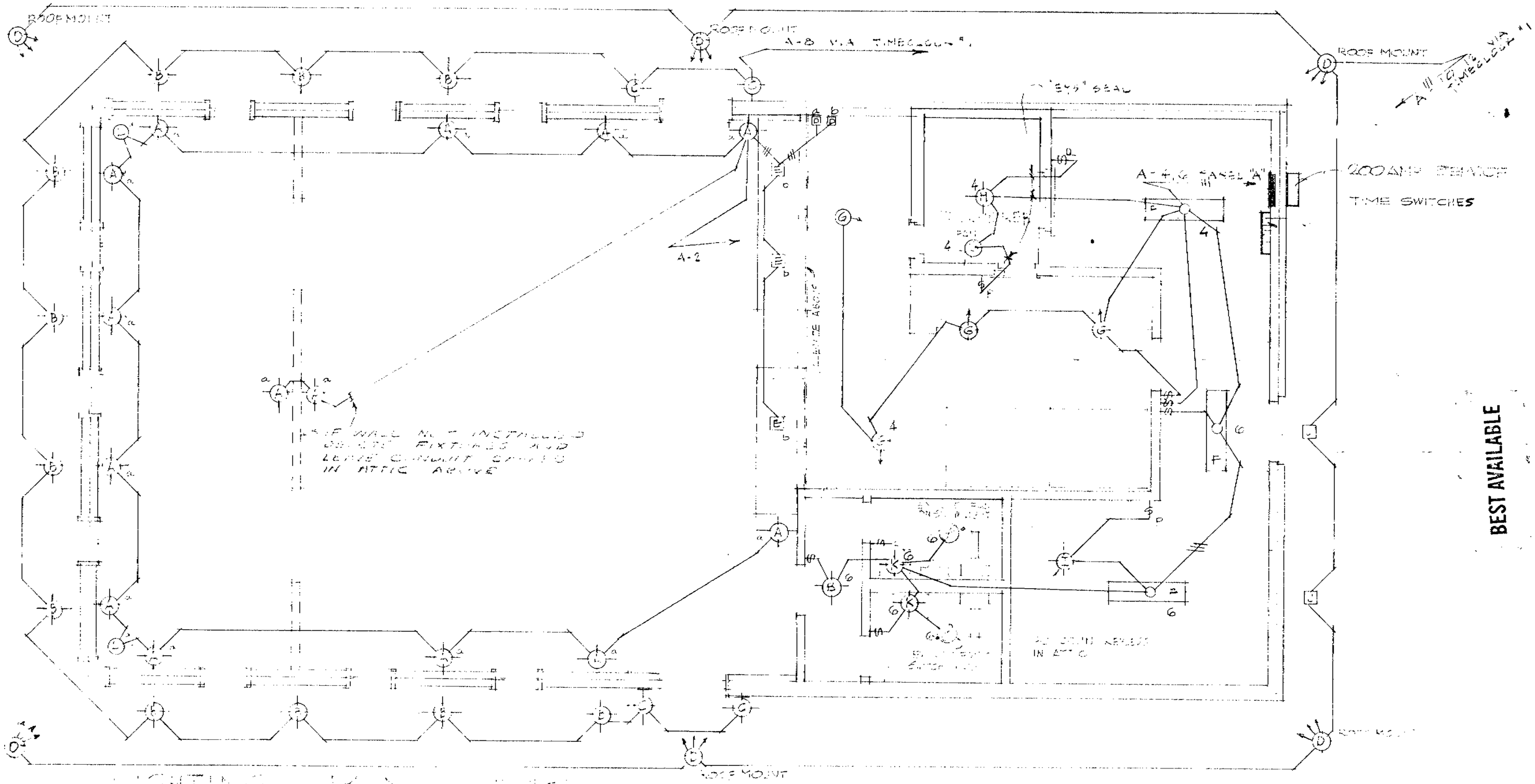

LIGHT FIXTURE SCHEDULE

SYM.	NO. REQ'D.	MANUFACTURER & MODEL NO.	MOUNTING	FINISH	REMARKS	LAMPS
A	12	TYPE [illegible] B	[illegible]	[illegible]		60 A .F
B	12	PRESCOLITE 7033	[illegible]	BLACK	4½" D x 7" OVERALL	75 A .F
C	4	[illegible]	[illegible]	[illegible]		100 A .F
D	6	STEUK [illegible] (3-FOOT)	[illegible]	[illegible]	[illegible]	3-150 PAR [illegible]
E	3	MCS # MJ 301	RECESSED	STD.	W. LOUVRE	75W & 30 SP
F	3	NEHTUNE #NE 240	CEILING	STD.	W. ½" SPACERS	2-F40/CW
G	3	STEBER #G-1052-C-W	CEILING	STD.	A.M AS DIRECTED	2-30 PAR F.
H	1	STEBER #VD-152	CEILING	STD.	VAPOR PROOF	150 W
I	1	[illegible] NEVEX	CEILING	STD.	[illegible]	100 W
J	3	MORI [illegible] RE-RSA 451	EDGE RECESSED	STD.		150 W
K	2	PRESCOLITE [illegible]	[illegible]	STD.		50 W
L	2	BY PIZZA HUT	CEILING		PAINT AS DIRECTED	3-50 W

ELECTRICAL LEGEND

- FLUORESCENT FIXTURE
- RECESSED FIXTURE
- SURFACE OR BRACKET FIXTURE
- BULLET
- SINGLE POLE SWITCH, 15A, [illegible] "4[illegible]", +52"
- PILOT SWITCH, BRYANT "4[illegible]-PLR", +52"
- FLUSH DIMMER - "Q" ISOLIN AUTOTRANSFORMER TYPE LUXTROL "WBD [illegible]", "D" 400W AUTOTRANSFORMER TYPE "WBD 450"
- DUPLEX RECEPTACLE BRYANT "52[illegible]", +12 UNLESS NOTED
- WP RECEPTACLE HESS & SEYMOUR "[illegible]", "45[illegible] COVER +24"
- 220V, 20A RECEPTACLE BRYANT "54[illegible]"
- TELEPHONE OUTLET [illegible] VIA CONDUIT [illegible] TO ATTIC
- FAN HOOK-UP
- [illegible] OUTLET
- [illegible] SWITCH WP TO RECEPTACLE
- EMT
- RIGID STEEL OR PVC CONDUIT

63664

14

PIZZA HUT INC.

Pizza Hut, Inc. Consulting Engineer 3014 Bridgeway Sausalito, California	ELECTRICAL PLAN	SHEET 13 OF [illegible]

BEST AVAILABLE

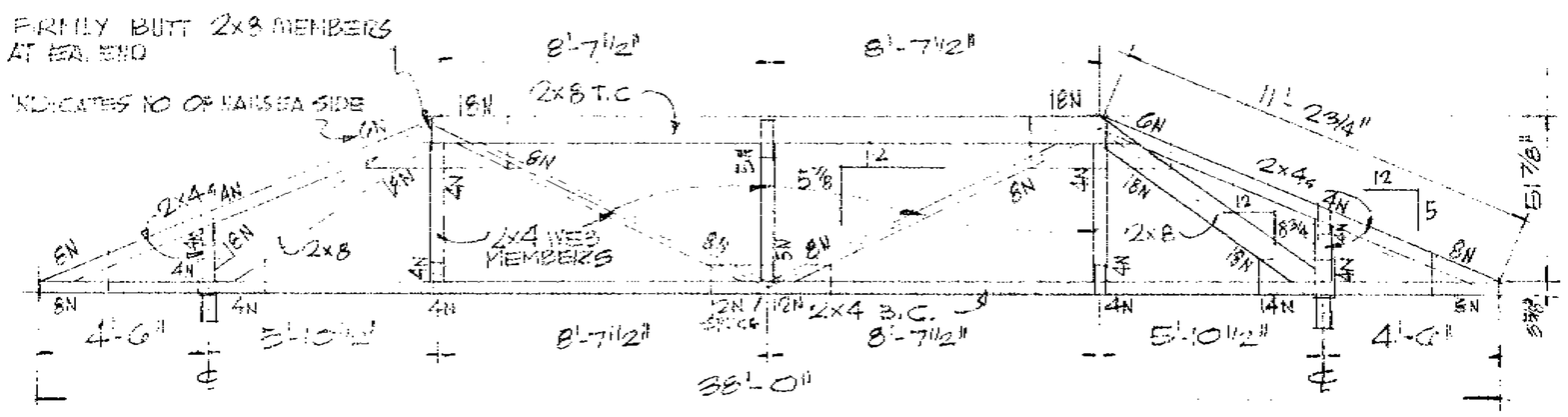

TRUSS T-2 CARRYING TRUSS 2-EA.
1/4"=1'-0"

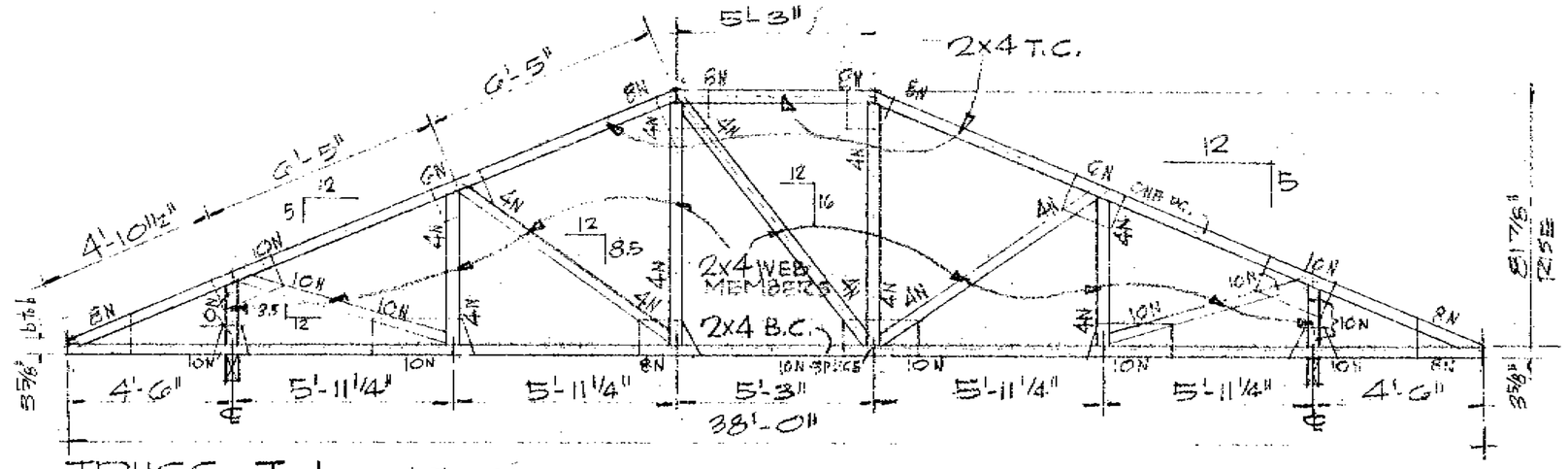

TRUSS T-1 19 EACH
1/4"=1'-0"

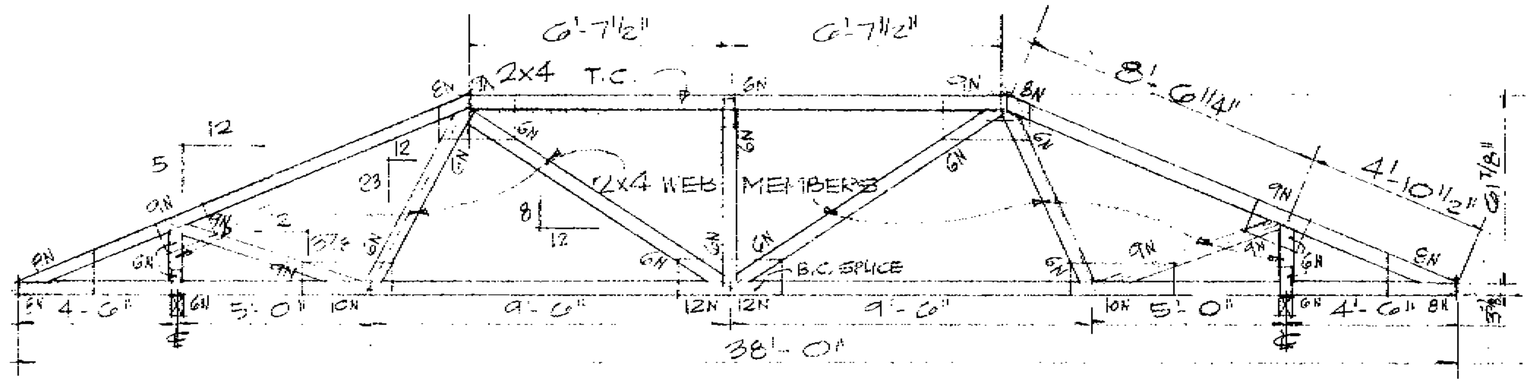

TRUSS T-3 2 EA.

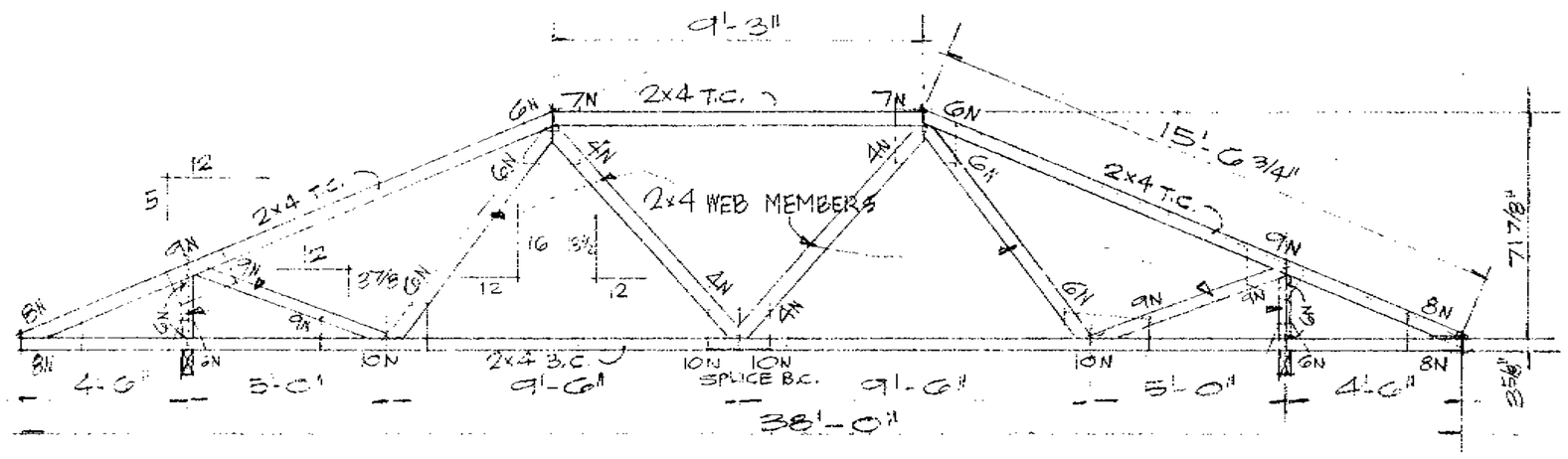

TRUSS T-4 2-EA.

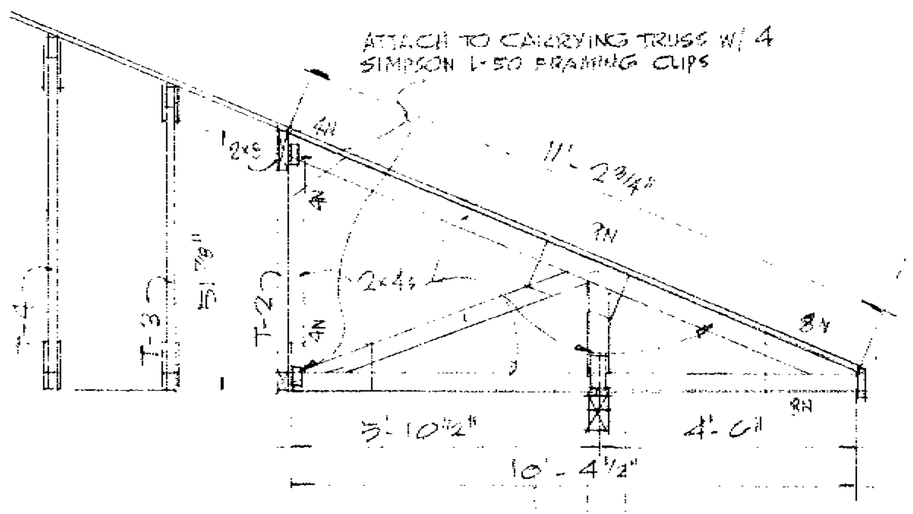

CANTILEVER TRUSS 20 EA.
SCALE 3/8"=1'-0"

TRUSS NOTES:

1. DELETED
2. ALL GUSSETS TO BE ½" D.F. STRUCT. PLYWD.
3. NAILING SHOWN AS (6N) INDICATES 6 1½" x 0.135" HELICALLY THREADED SCREWTIGHT NAILS INTO MEMBER FROM EACH SIDE
4. MEMBERS SHALL INTERSECT AND FIRMLY BUTT
5. *NAILS TO PENETRATE MIN. 1" INTO TRUSS MEMBER*

SHEAR WALLS & ROOF DIAPRAGM NOTES

(A) DELETED
(B) 5/8" D.F. C-C. W/10d @ 6" OC (NO BLOCKING)
(C) SEE SECTION 2/2A
(D) SHEAR WALL: 5/8" D.F. C-C SHEATHING W/ 8d @ 6" o.c.** ALL PANEL EDGES @ 8d @ 12" oc FIELD
(E) SHEAR WALL SEE TYP. DIER DET 3/2A

1. ALL NAILS TO BE COMMON WIRE-SIZE AS NOTED
2. ALL PLYWOOD SHEAR ELEMENTS TO BE DOUGLAS FIR C-C EXTERIOR (STRUCT. II)

** 2x4 BLOCKING TO SUPPORT ALL PANEL EDGES AS REQUIRED

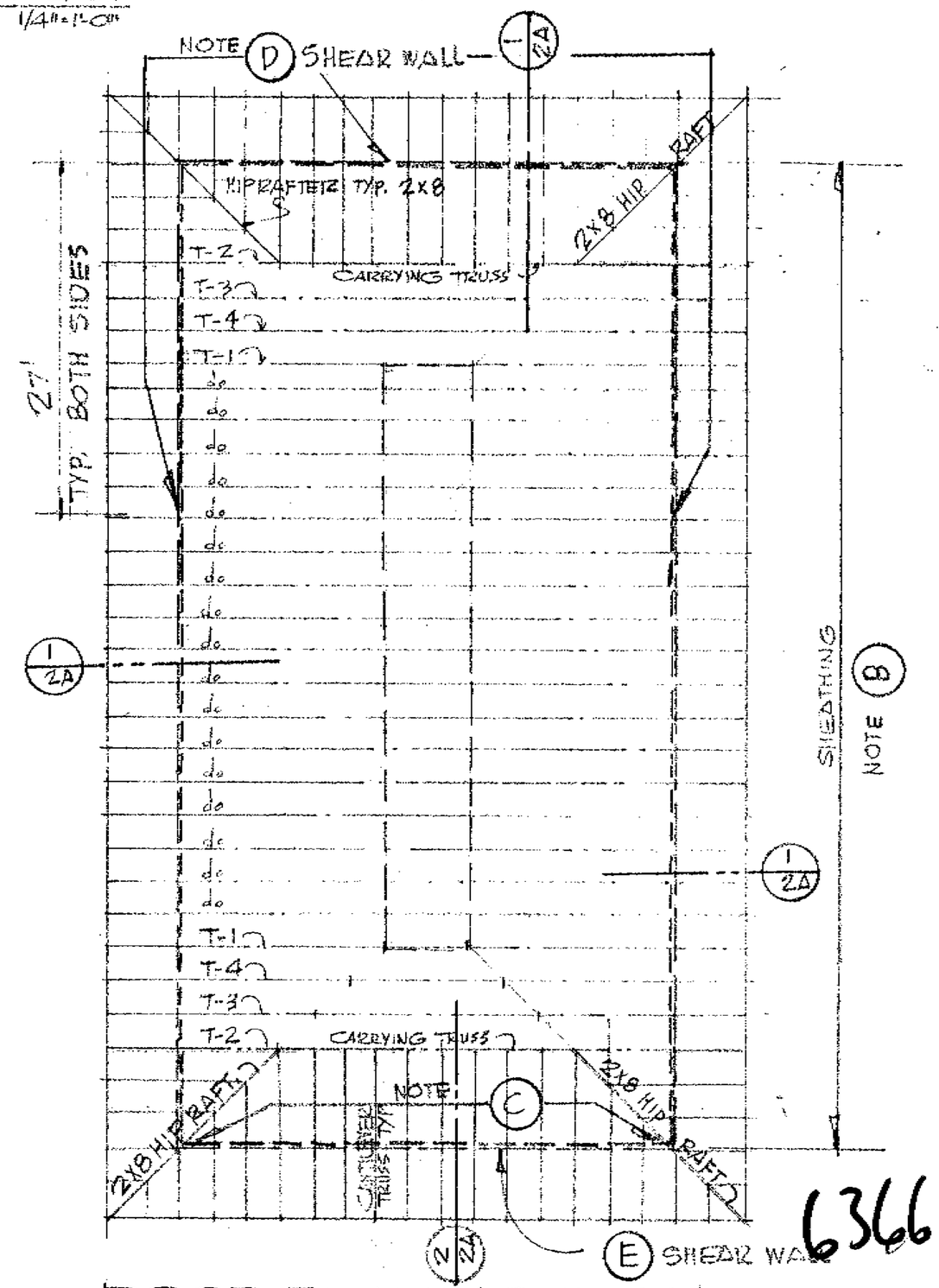

ROOF FRAMING PLAN
1/8"=1'-0"

BEST AVAILABLE

63664

15

ADDENDUM #1 TO WORKING DRAWINGS; PIZZA HUT INC DATED 10/23/69

PIZZA HUT ROOF STRUCTURE & SHEAR DIAPHRAGM DETAILS

DRAWN R.R.	NOV 12, 69

Ralph Rapattoni
Consulting Engineer
344 Village Lane
Los Gatos, Cal. 95030

1A
OF 2

REGISTERED PROFESSIONAL ENGINEER RALPH RAPATTONI, JR. No. 17506 CIVIL STATE OF CALIFORNIA

Revised 12/9/69 R.R.

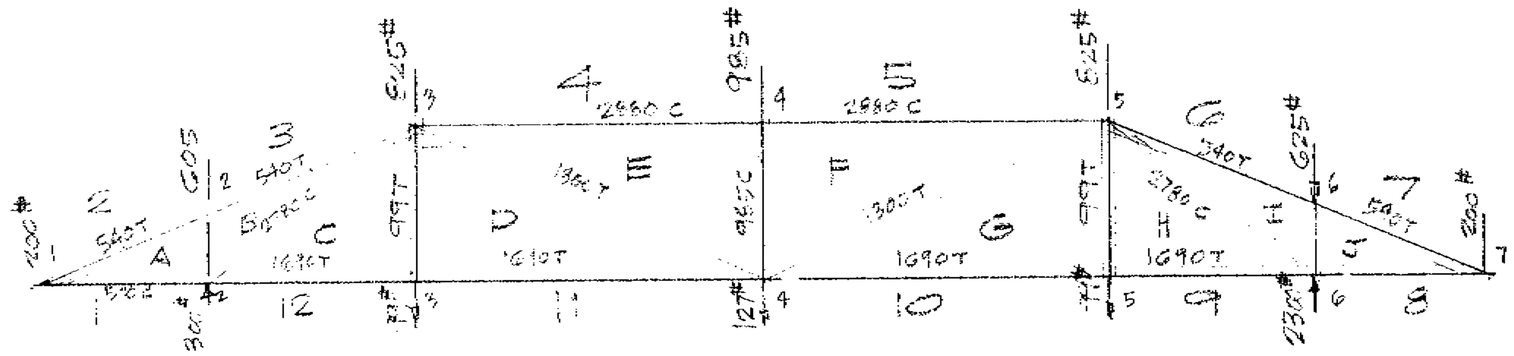

TRUSS 2
CARRYING TRUSS

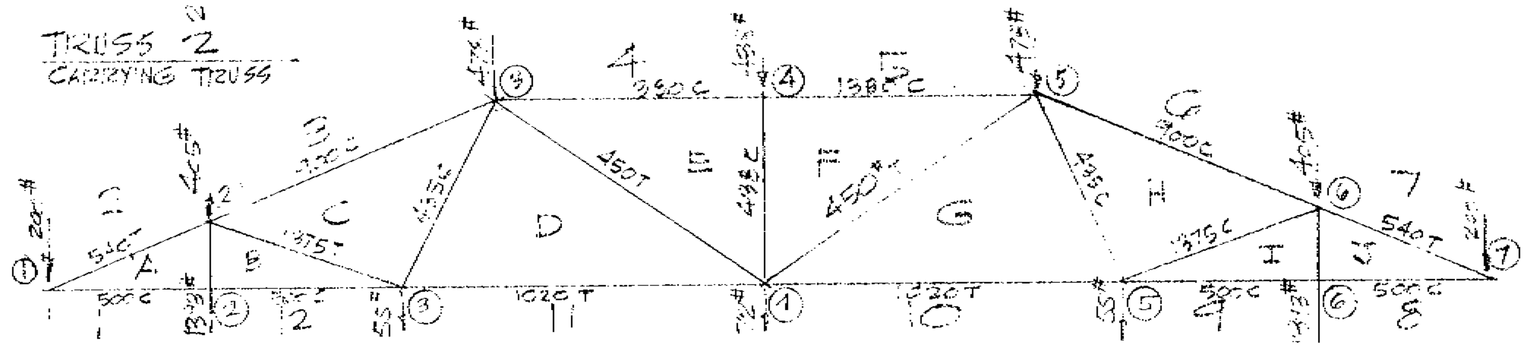

TRUSS - 3

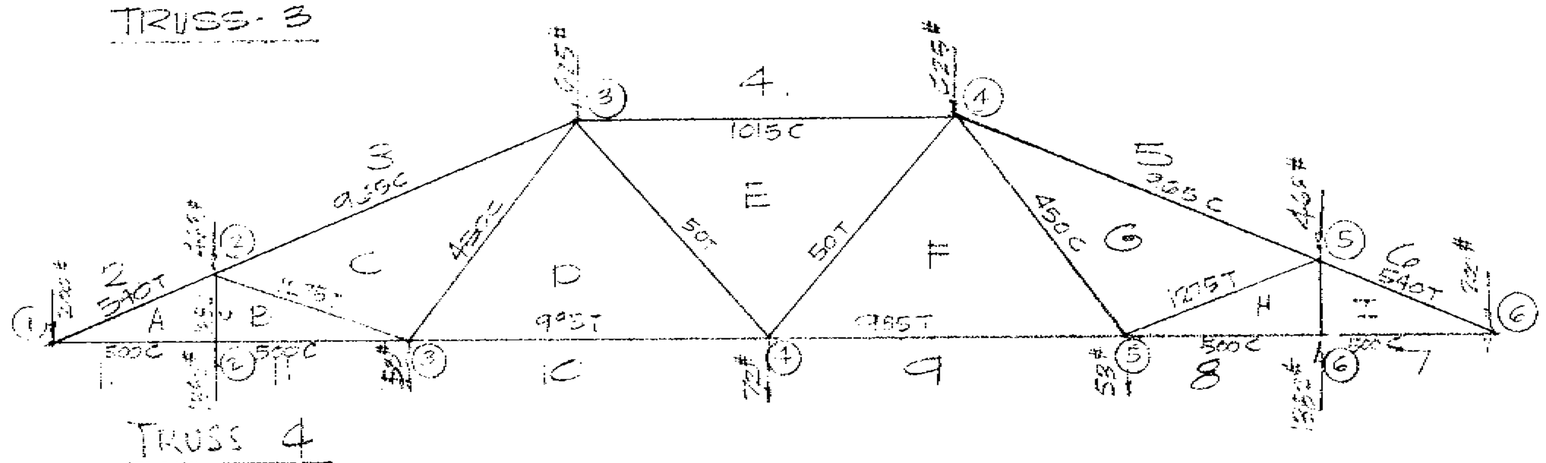

TRUSS 4

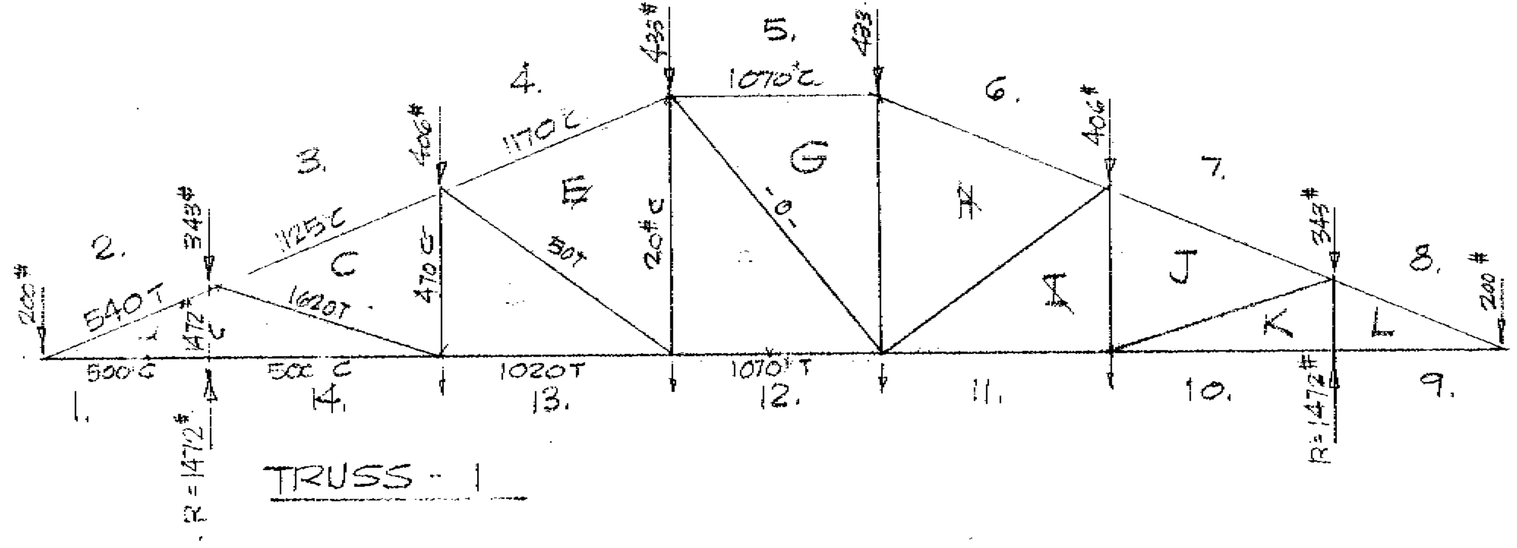

TRUSS - 1

TRUSS LOAD DIAGRAMS

1/4"

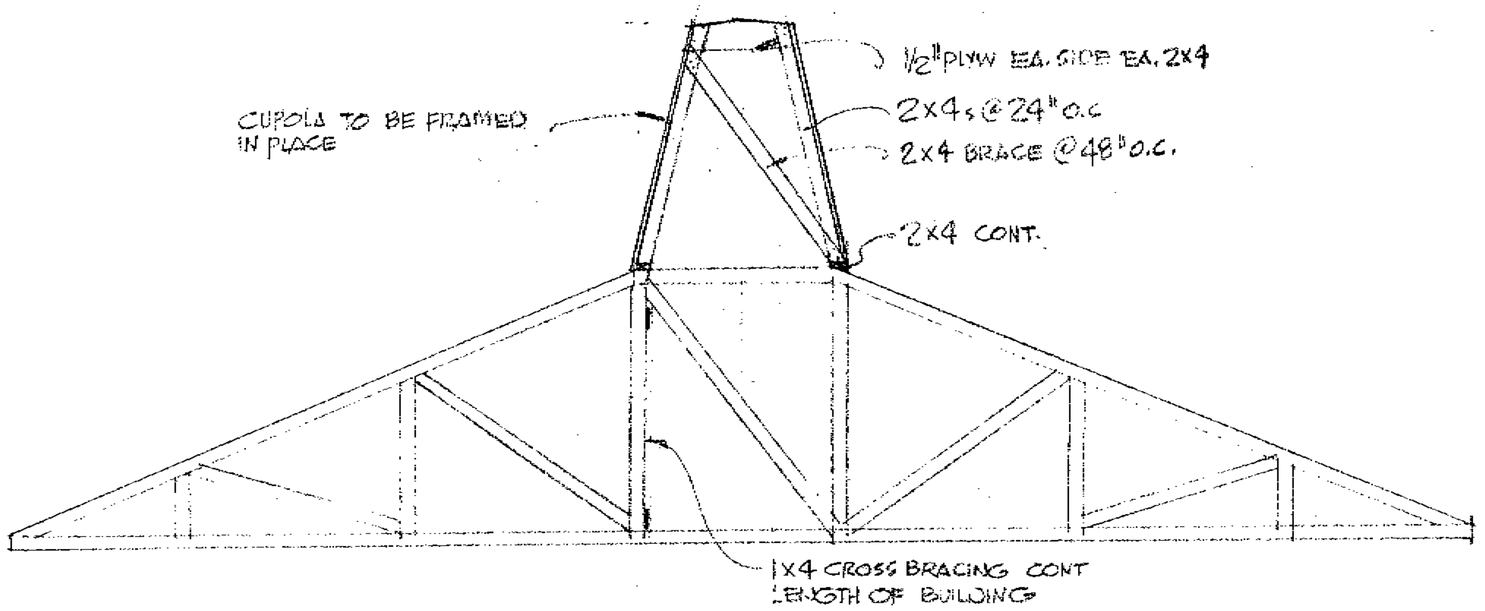

ELEV OF TRUSS T-1 WITH CUPOLA 1/4"

NOTE:
LATERAL LOAD STRESSES (WIND) WHEN CONSIDERED WITH ALLOWED 1/3 STRESS INCREASE ARE LESS THAN NORMAL STRESSES (GIVEN).

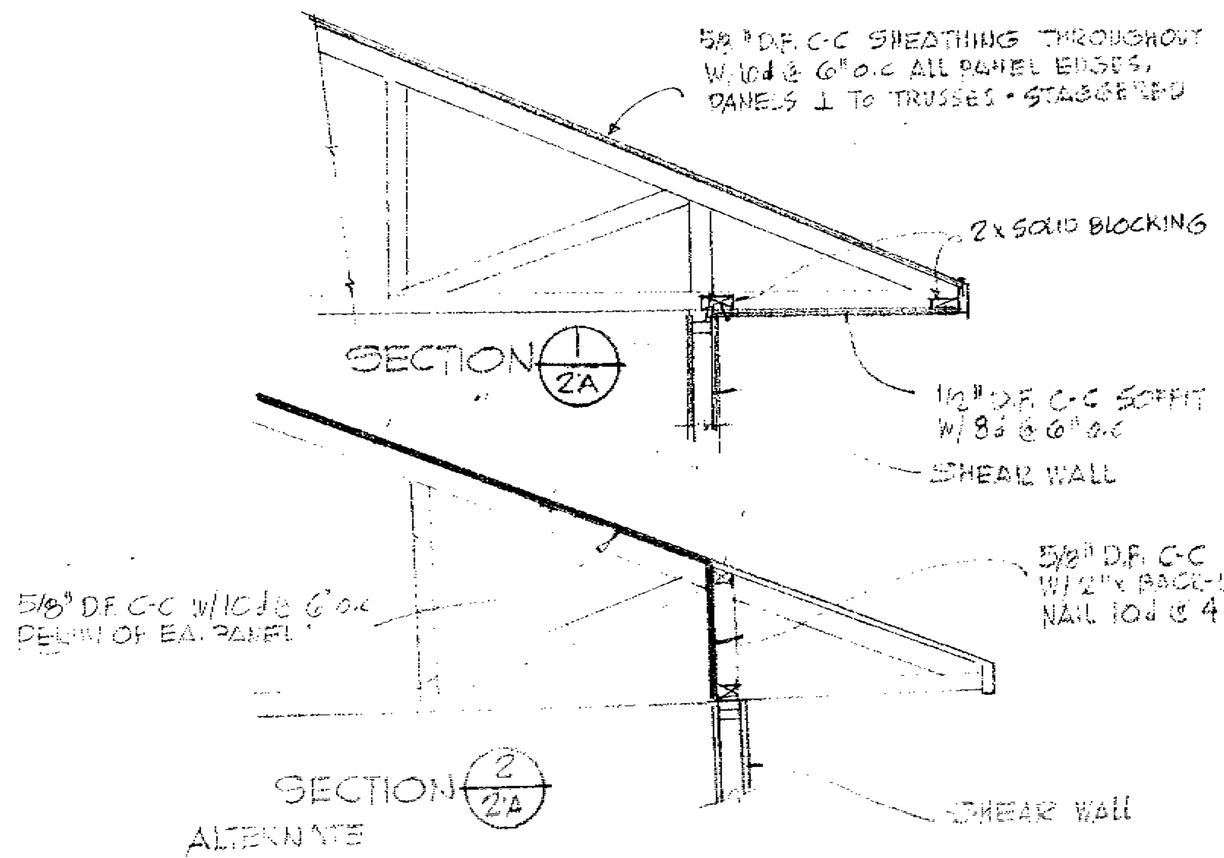

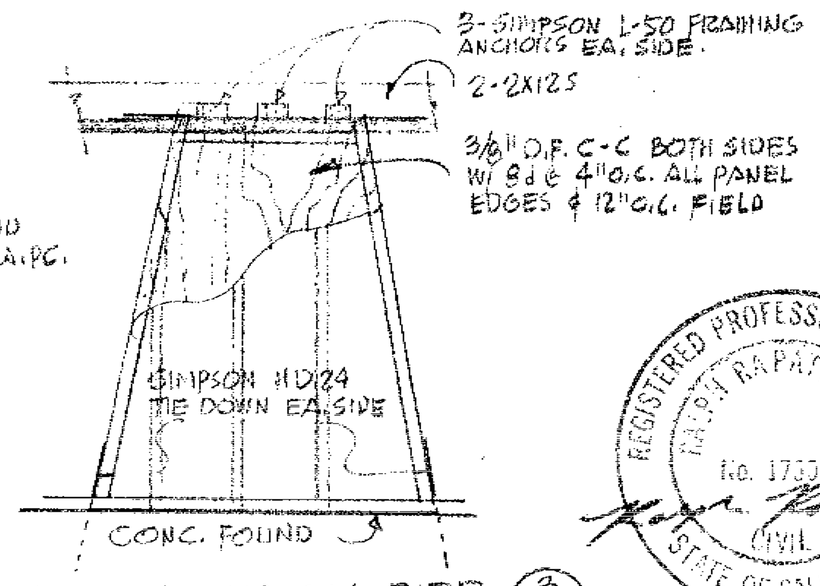

DETAIL TYPICAL PIER 3/2A
FRONT WALL ONLY

REGISTERED PROFESSIONAL ENGINEER
RALPH RAPATTONI JR.
No. 17336
CIVIL
STATE OF CALIFORNIA

Revised 12/4/69 R.R.

63664

ADDENDUM No 1
TO WORKING DRAWINGS FOR
PIZZA HUT INC DATED 10/28/69

PIZZA HUT ROOF STRUCTURE & SHEAR DIAPHRAGM DETAILS

DRAWN R.R.	NOV 12, 69	

16

Ralph Rapattoni
Consulting Engineer
344 Village Lane
Los Gatos, Cal. 95030

2A
OF TWO

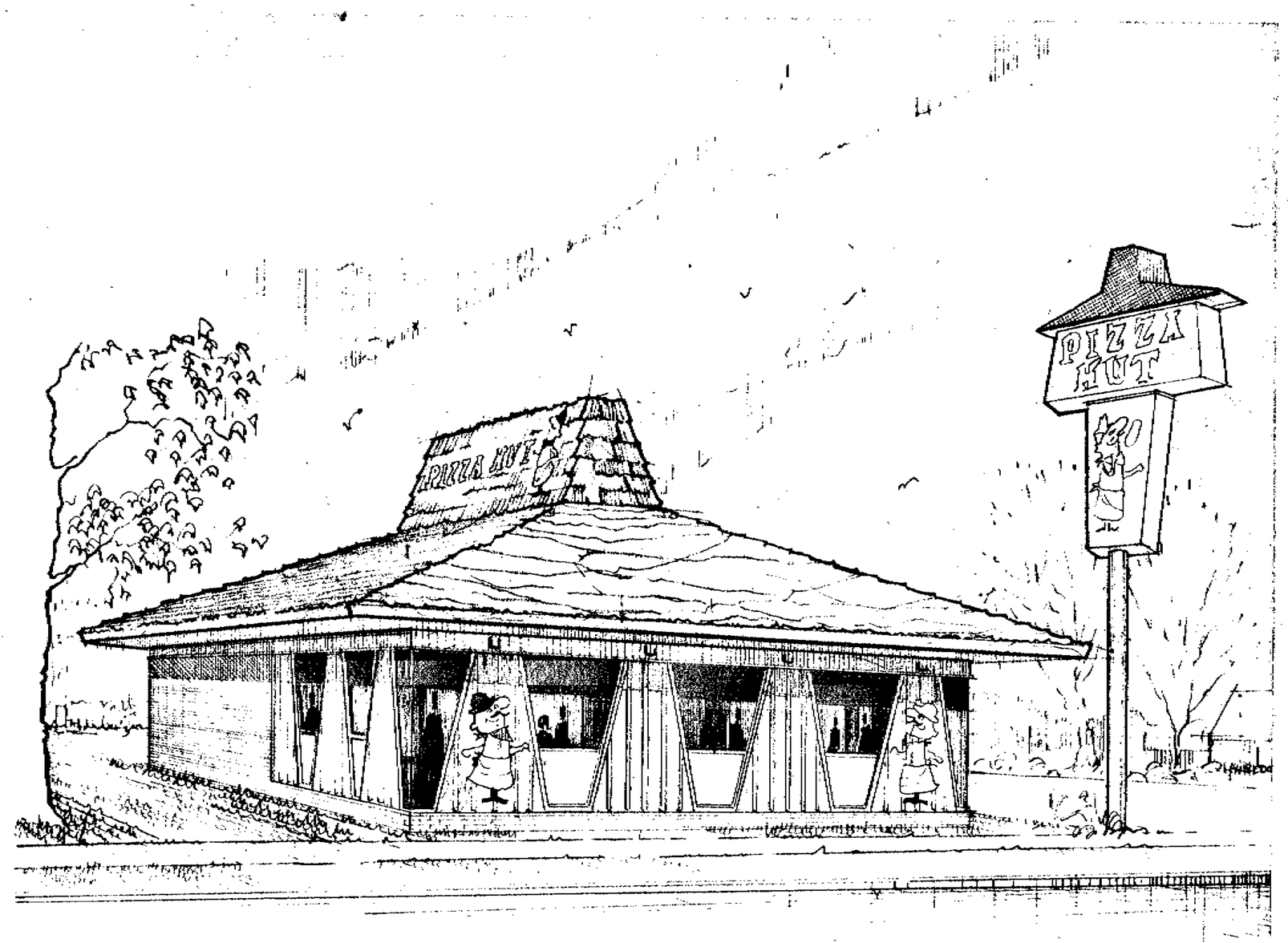

63664

PIZZA HUT INC.

GRIFFITH & BONHAM ARCHITECTS A.I.A.
314 BITTING BUILDING 67202 WICHITA, KANSAS

Health

NOTE:
THIS ORIGINAL DESIGN IS PROTECTED BY COPYRIGHTS HELD BY PIZZA HUT INC. AND IS HEREBY REPRODUCED AND MODIFIED FOR THE EXCLUSIVE USE OF PIZZA HUT INC

17

PLAN MUST BE POSTED ON JOB FOR FINAL APPROVAL

Health Dept. See Sheets 8 & 9 also

Date 11-12-69 No. Plan as submitted
APPROVED
Santa Clara County Health Dept.
Submitted on
By

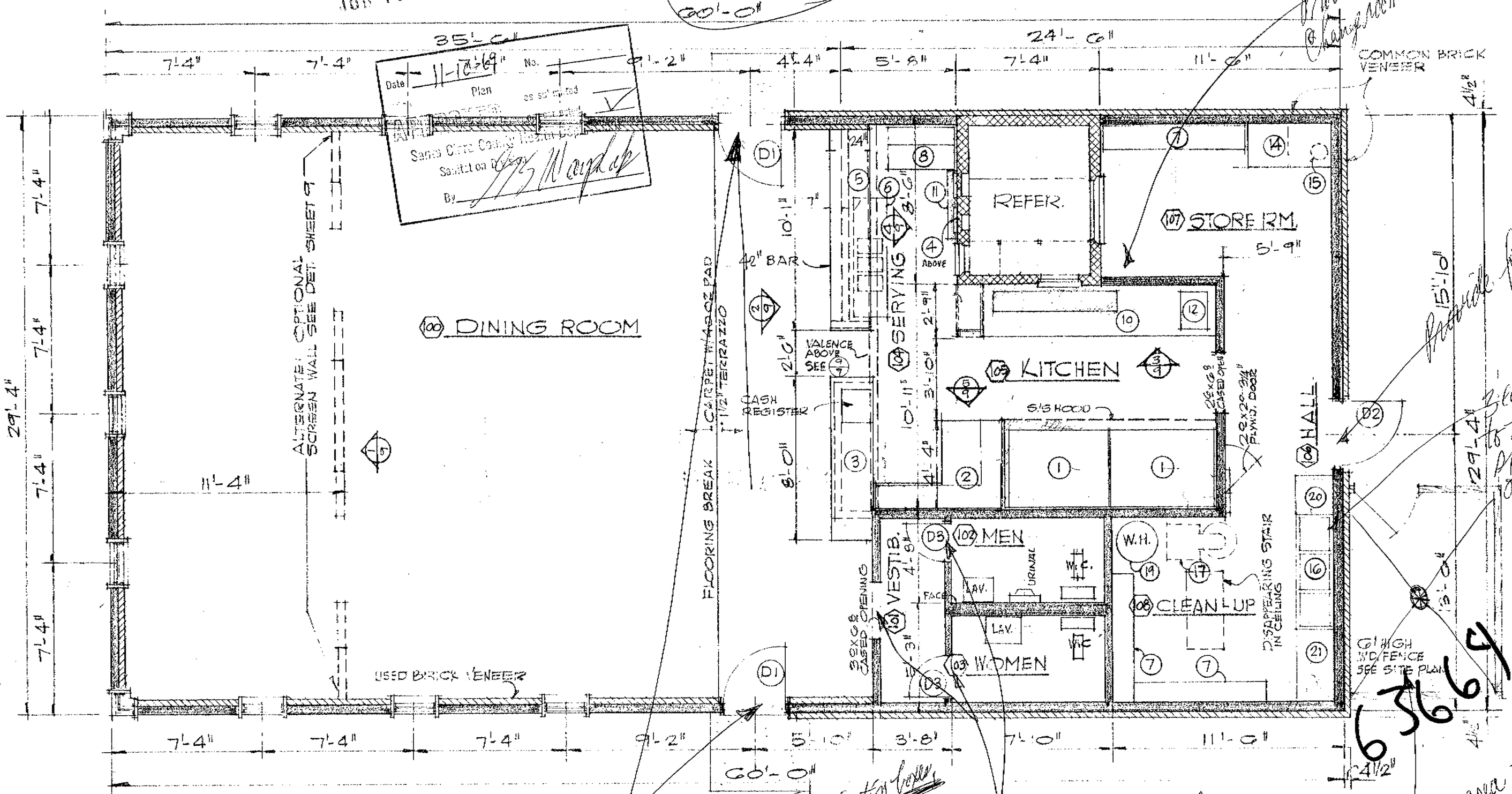

NOTE: FOR DETAILS OF WALKS, PORCHES & PLANTERS SEE SITE PLAN

FLOOR PLAN
1/4"=1'-0"

Provide a separate changeroom area (room or enclosure)

Provide fly fan

29'-4" Bloomfield to have 12" back splash made of metal

Positive control air-conditioning with self closing doors

Provide restrooms with self-closing doors; also provide soap & towel dispensers

Provide area with concrete pad sloping to sanitary drain; curbed on two sides & w/ hot & cold water; also, also cold

6364

18

REGISTERED PROFESSIONAL ENGINEER No. 7595 STATE OF CALIFORNIA

GENERAL NOTES

1. EXTERIOR DIMENSIONS ARE TO FACE OF SHEATHING
2. INTERIOR " " " " " STUDS
3. ALL FRAME WALLS ARE TO BE 2x4 STUDS @ 16" O.C. UNLESS OTHERWISE SHOWN.

PIZZA HUT INC.

Ken Rigatoni	DRAWN: R.R.	DATE: 10/23/69	SHEET 1
		REV. NO.	
Los Altos, Cal. 95020	FLOOR PLAN		OF

provide 6" coving in food prep. areas.

INTERIOR FINISH SCHEDULE

ROOM #	DESCRIP.	FLOOR	BASE	WALLS	CEILING	REMARKS
100	DINING	TERRAZZO & CARPET	BRICK	USED BRICK VEN'R & MARLITE #WILD CHERRY #799 W/ MATCH'G TRIM & BASE	ACOUSTIC TEXT. ON 5/8" GYP. BD.	DOORS TO BE BIRCH OR ASH VENEER STAIN TO MATCH MARLITE
101	VESTIBULE	TERRAZZO	BLACK TOPSET RUB.	STIPPLE ENAMEL ON 5/8" GYP BD.	do	DOORS TO BE BIRCH OR ASH VENEER STAIN TO MATCH MARLITE
102	MEN'S RM.	do	do	do	STIPPLE ENAM. ON 5/8" GYP BD.	MARLITE GOLD LACE #524 WAINSCOTE 48" HIGH 4-WALLS
103	WOMEN'S RM	do	do	do	do	do
104	SERVING	do	do	MARLITE #793 OVER 5/8" GYP BD.	ACOUSTIC TEXT. ON 5/8" GYP. BD.	GLASS REACH-IN DOOR (REFR.),
105	KITCHEN	do	do	MARLITE DELUXE HIGH GLOSS #C11 (SWAN WHITE) OVER 5/8" GYP. BD.	MATCH WALLS	
106	HALL	do	do	STIPPLE ENAMEL OVER 5/8" GYP BD.	MATCH WALLS	
107	STORE RM.	do	do	do	do	
108	CLEAN-UP	do	do	do	do	FORMICA SPLASH BACK & COUNTER SEE DETAIL

GENERAL NOTES

1. ALL DOORS TO BE EQUIPED W/ SELF CLOSERS
2. REACH-IN DOOR & WALK-IN DOOR TO BE FURNISHED & INSTALLED BY TENNANT.
3. GLASS REACH-IN DOOR MANUFACTURED BY ANTHONY

EQUIPMENT & FURNISHINGS SCHEDULE

SYM.	DESCRIPTION	REMARKS
1	OVENS	FURN. BY TENANT CONTRACTOR INSTALLS
2	CUTTING TABLE	CONTR. FURNISHES & INSTALLS - SEE DET.
3	REGISTER COUNTER	CONTR. FURNISHES & INSTALLS - SEE DET.
4	MENU BOARD	FURN. BY TENANT CONTRACTOR INSTALLS
5	BAR	CONTR. FURNISHES & INSTALLS SEE DET.
6	SINKS	FURN. BY TENANT CONTR. INSTALLS
7	SHELVING	CONTR. FURNISHES & INSTALLS
8	ICE MAKER	FURNISHED BY TENANT N.I.C
9	DELETED	———
10	MAKE-TABLE	CONTR. FURNISHES & INSTALLS
11	DRINK SHELF	TENANT FURNISHES CONTR. INSTALLS
12	DOUGH ROLLER	FURNISHED BY TENANT
13	WALK-IN REFRIG.	CONTR. FURN & INST. INSULATED CASE TENANT FURN & INST. DOORS & REFRIG. EQ.
14	BUILT-IN DESK	CONTR. FURNISHES & INSTALLS
15	FLOOR SAFE	FURN. BY TENANT CONTR. INSTALLS
16	SINKS	FURN BY TENANT CONTR. INSTALLS
17	MIXER	FURNISHED BY TENANT N.I.C.
18	VENTILATING HOOD	CONTR. FURNISHES & INSTALLS SEE DET.
19	WATER HEATER	CONTR. FURNISHES & INSTALLS
20	STAINLESS DRAIN TRAY	FURN BY TENANT CONTR. INSTALLS
21	FORMICA COUNTER	CONTR. FURNISHES & INSTALLS

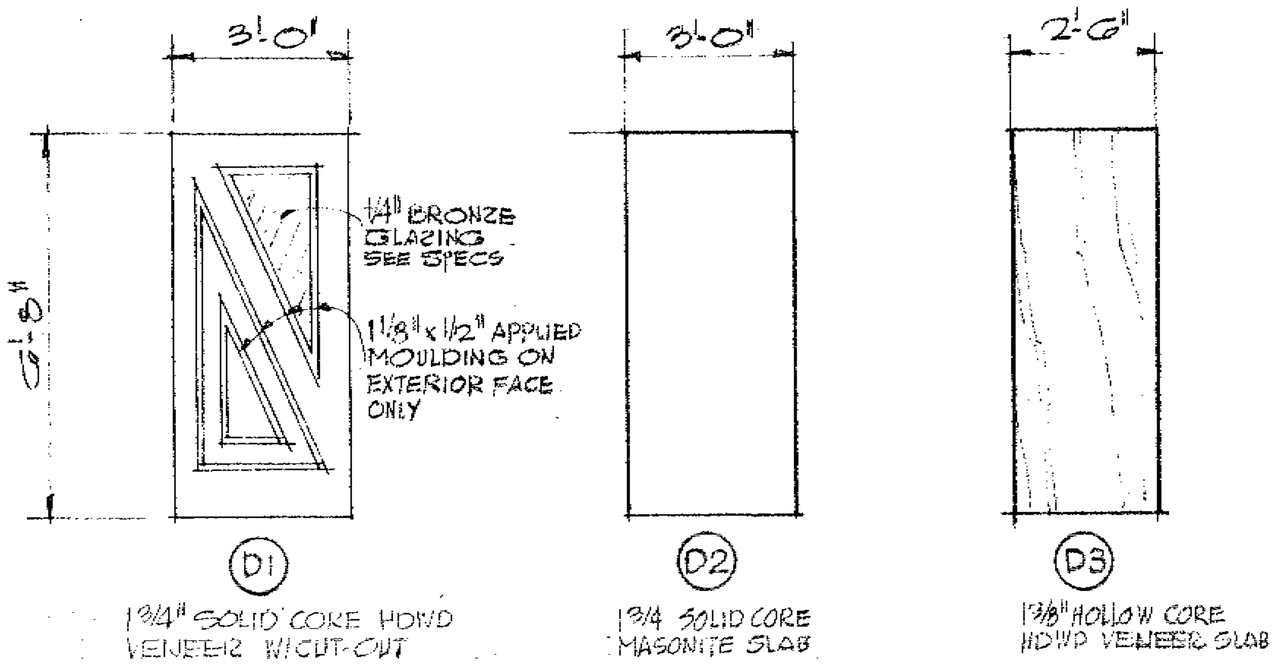

DOOR DETAILS

1/4" = 1'-0"

63664

19

REGISTERED PROFESSIONAL ENGINEER CALVIN [illegible] No 17906 CIVIL STATE OF CALIFORNIA

PIZZA HUT INC.

Ralph Rapallini Consulting Engineers 3838 Mission Ave. Oceanside, Calif. 92054	DRAWN R.R.	DATE 10/23/69	SHEET 2
		REV. NO.	
	SCHEDULES		OF

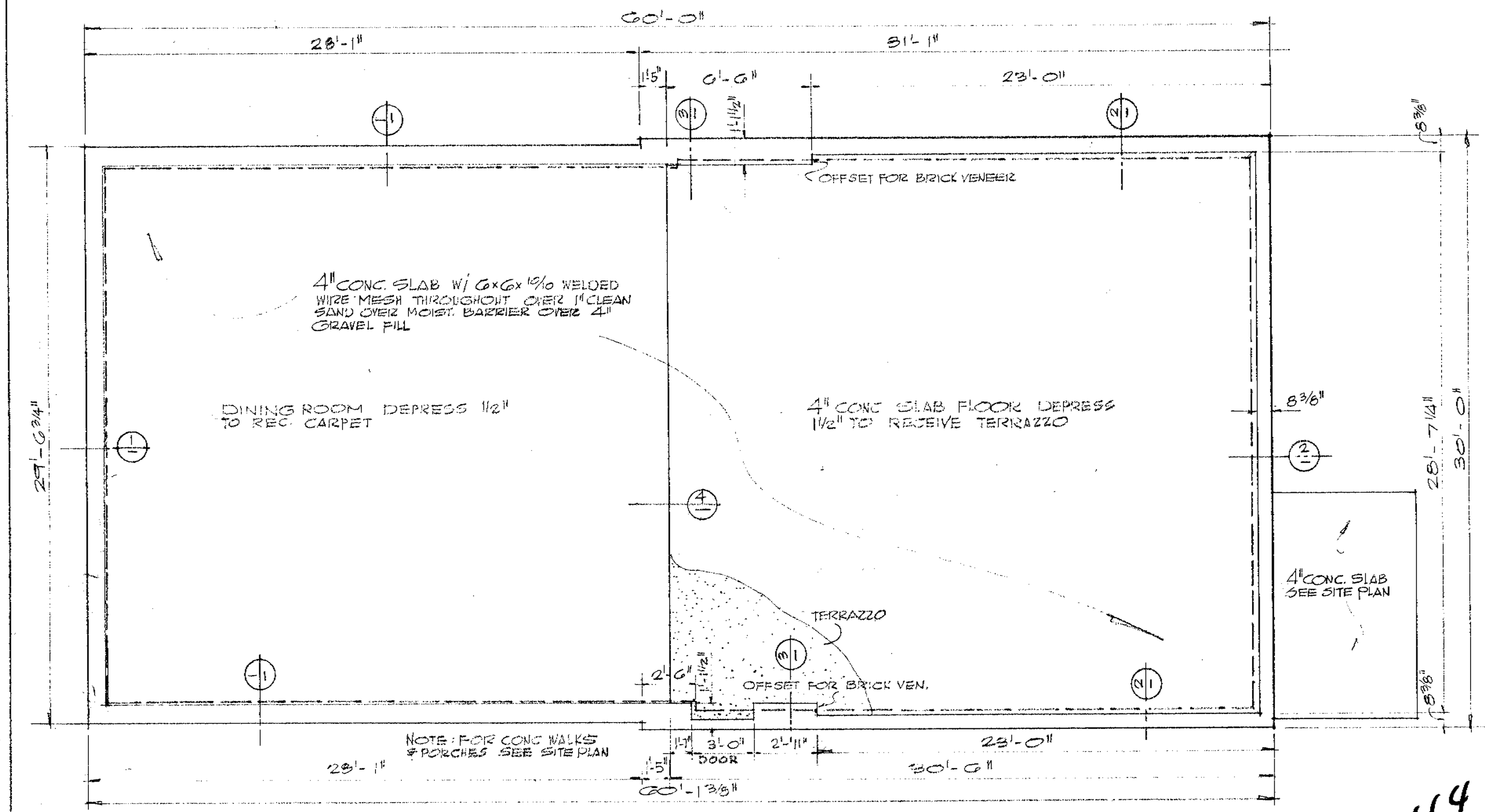

FOUNDATION PLAN SCALE 1/4" = 1'-0"

63664

~~63674~~

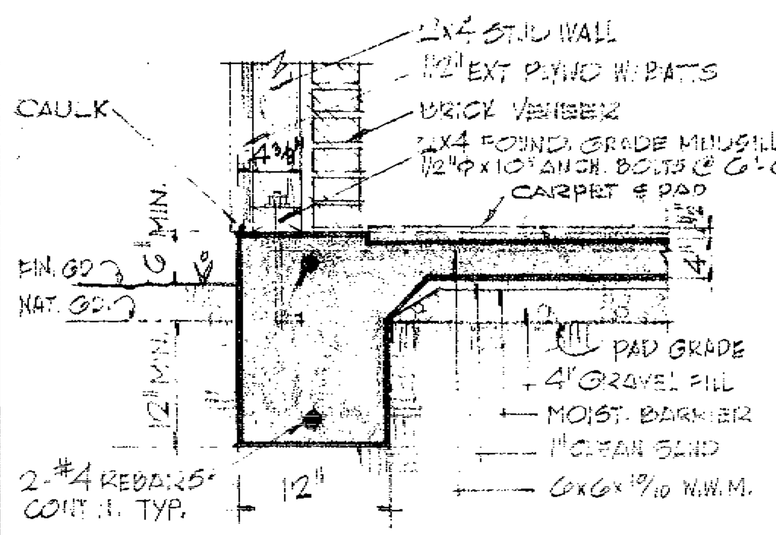

SECTION 1

SCALE 1" = 1'-0"

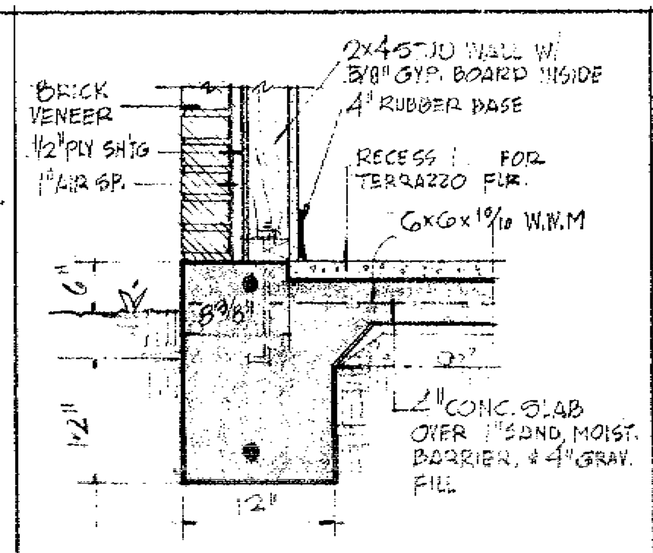

SECTION 2

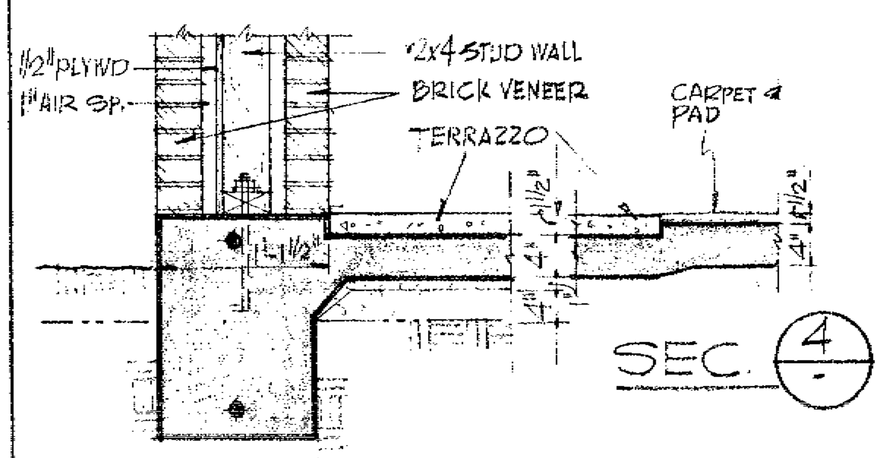

SEC. 4

SECTION 3

20

REGISTERED PROFESSIONAL ENGINEER
No. 17506
CIVIL
STATE OF CALIFORNIA

PIZZA HUT INC.

Ralph Rapattoni	DRAWN: R.R.	DATE: 10/23/69	SHEET 3
		REV. NO	
	FOUNDATION PLAN		OF 17

WOOD TRUSS DESIGN

TRUSS MANUFACTURER SHALL SUBMIT SHOP DRAWINGS AND STRUCTURAL CALCULATIONS FOR APPROVAL PRIOR TO FABRICATING TRUSSES

DESIGN LOADS:
ROOF D.L. = 15 PSF
ROOF L.L. = 20 PSF
ATTIC L.L. = 10 PSF
WIND 15 PSF (HORIZ.)

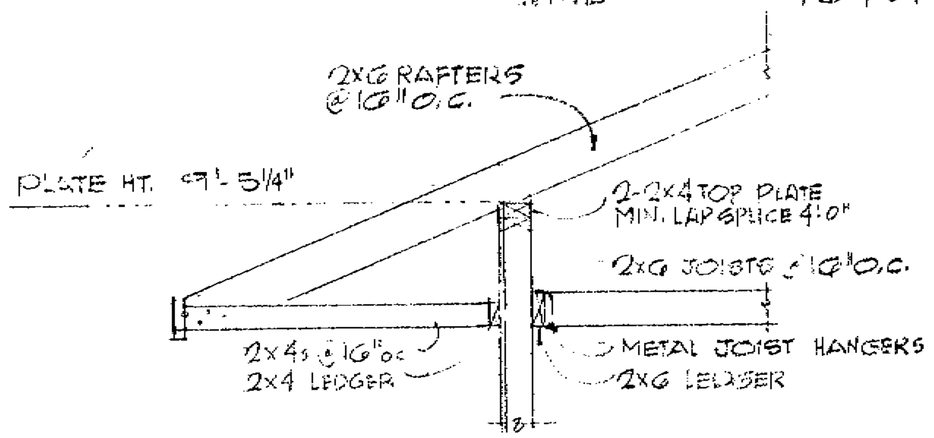

DETAIL OF ALTERNATE END FRAMING

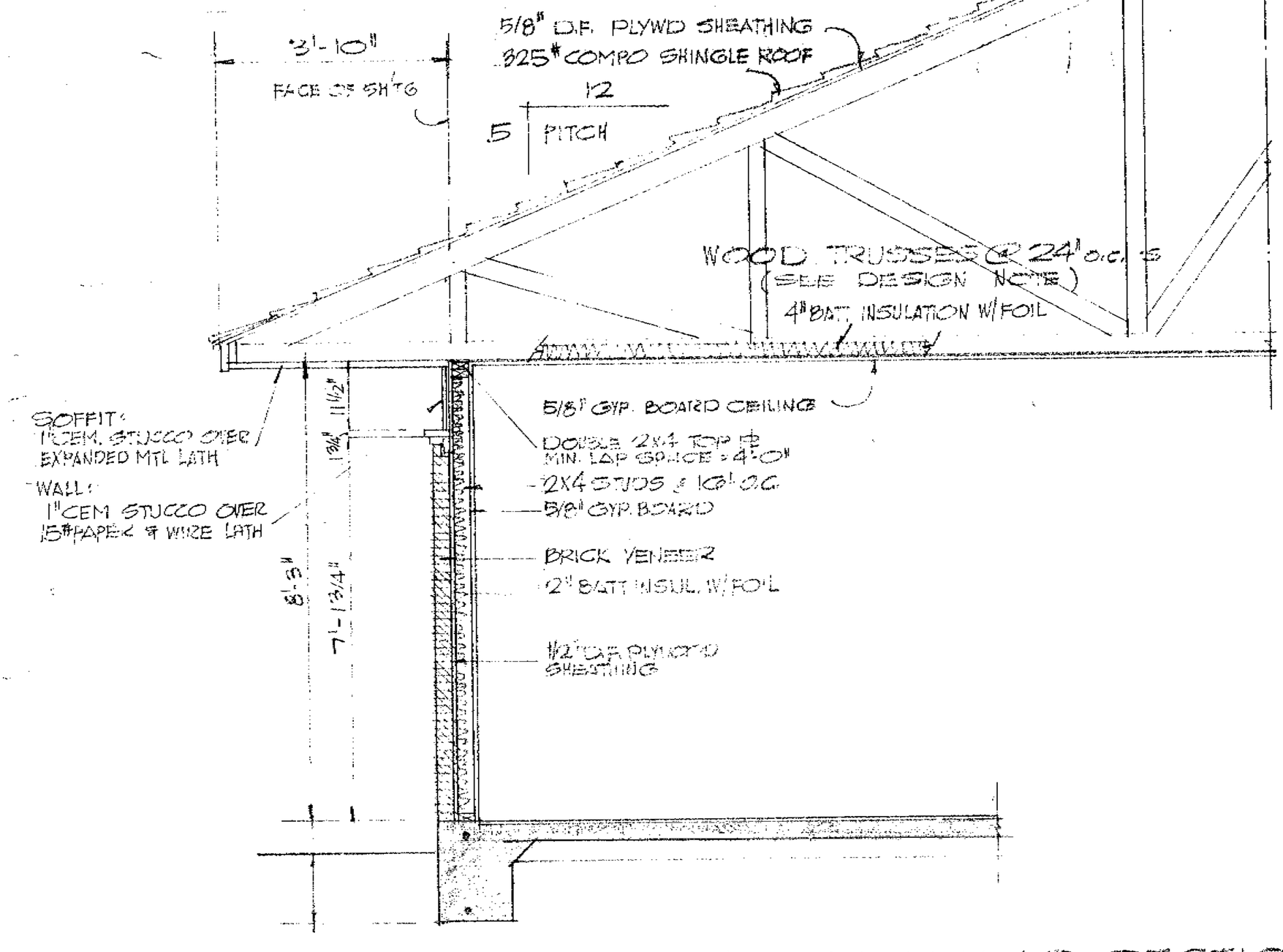

TYPICAL FRAMING SECTION
SCALE 1/2"=1'-0"

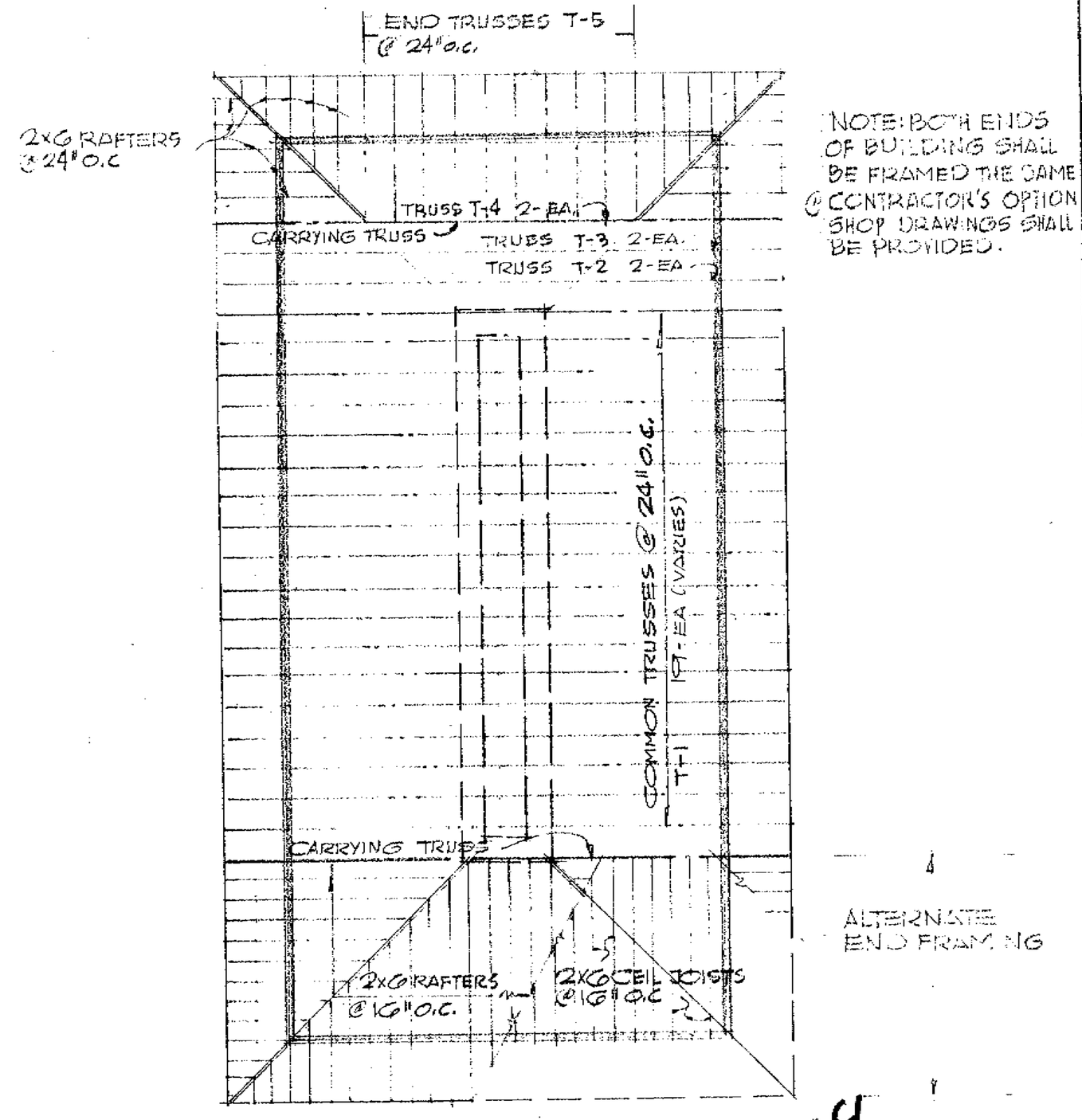

NOTE: BOTH ENDS OF BUILDING SHALL BE FRAMED THE SAME @ CONTRACTOR'S OPTION SHOP DRAWINGS SHALL BE PROVIDED.

ROOF FRAMING PLAN
SCALE 1/8"=1'-0"

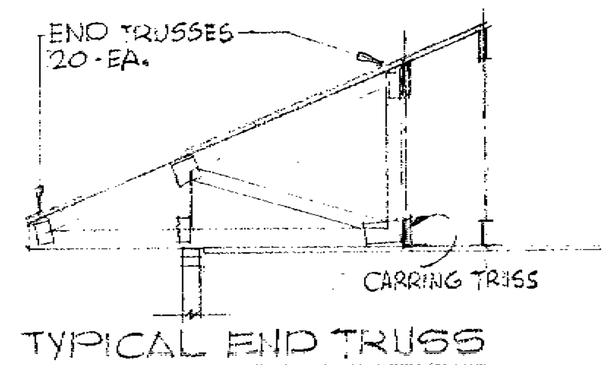

TYPICAL END TRUSS
SCALE 1/4"=1'-0"

63664
~~63644~~

21

REGISTERED PROFESSIONAL ENGINEER
RALPH RAPATTON, JR.
No. 17506
CIVIL
STATE OF CALIFORNIA

PIZZA HUT INC.

	DRAWN: R.R.	DATE 10/23/64	SHEET 4
		REV. NO.	
Los Gatos, Cal.	ROOF FRAMING		OF

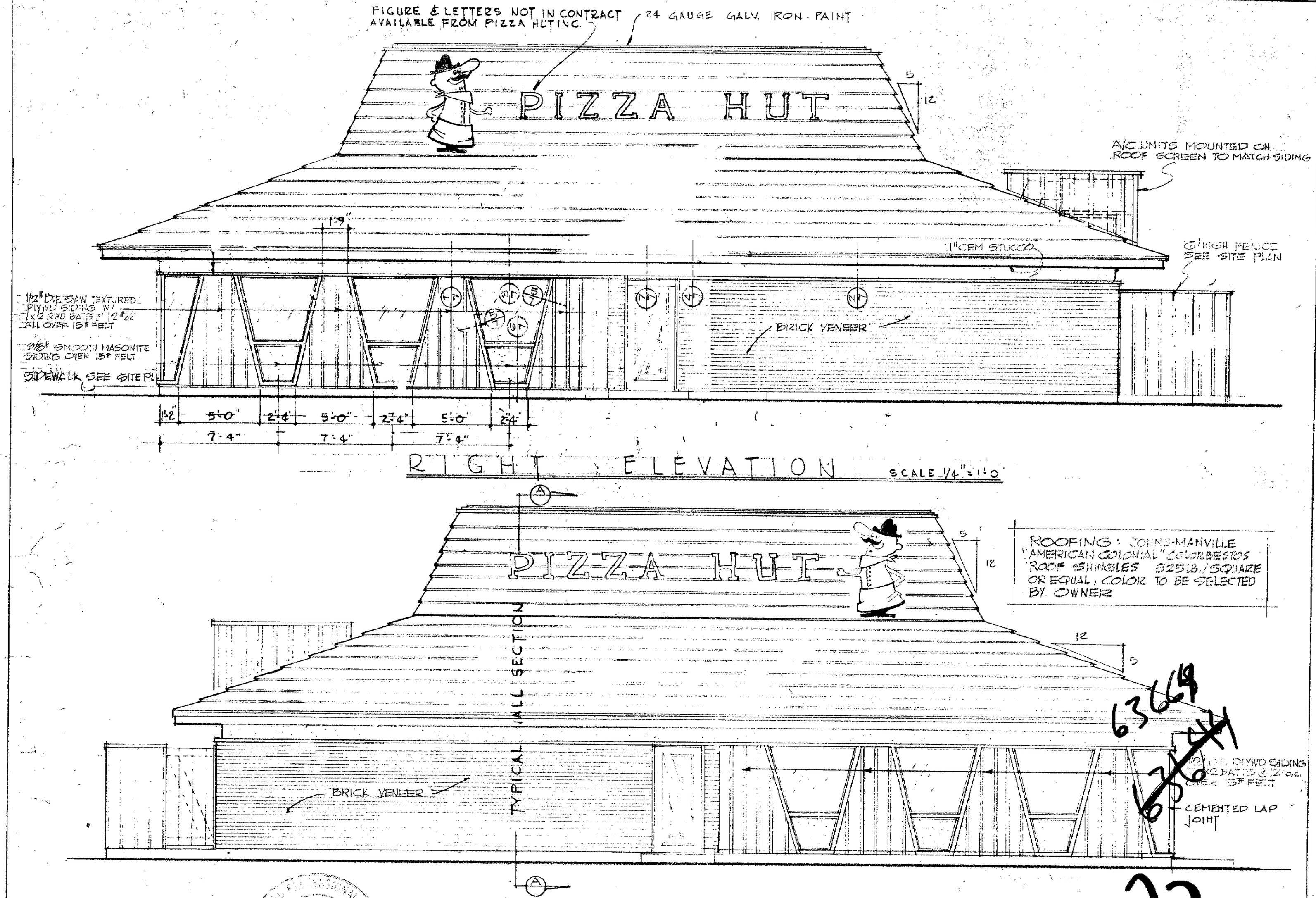

RIGHT ELEVATION SCALE 1/4" = 1'-0"

ROOFING: JOHNS-MANVILLE "AMERICAN COLONIAL" COLORBESTOS ROOF SHINGLES 325 LB./SQUARE OR EQUAL, COLOR TO BE SELECTED BY OWNER

63669

63644

LEFT ELEVATION SCALE 1/4" = 1'-0"

BEST AVAILABLE

22

REGISTERED PROFESSIONAL ENGINEER RALPH RAVATTONI, JR. No 17506 CIVIL STATE OF CALIFORNIA

PIZZA HUT INC.

Ralph Ravattoni	DRAWN: R.R.	DATE 10/23/64	SHEET 5
		REV NO	
	EXTERIOR ELEVATIONS		OF [redacted]

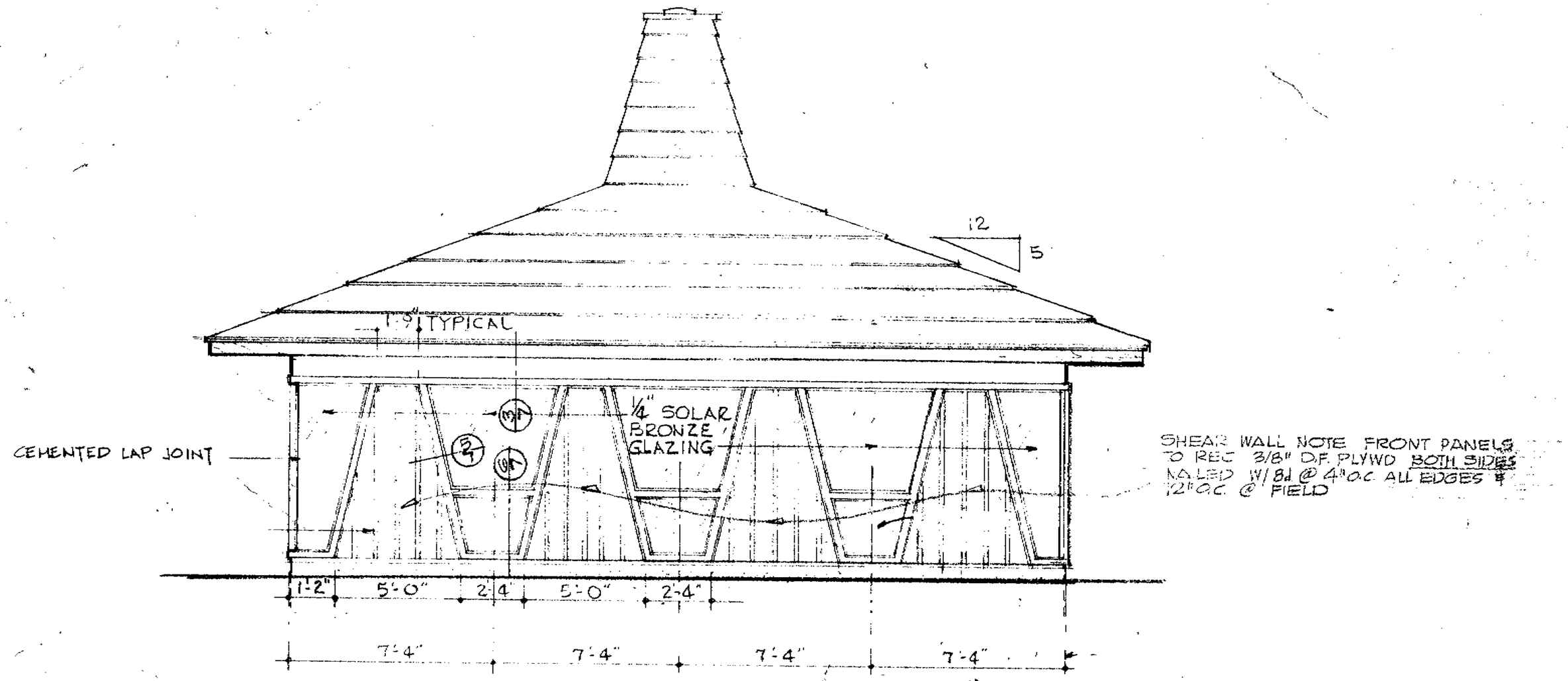

FRONT ELEVATION SCALE 1/4" = 1'-0"

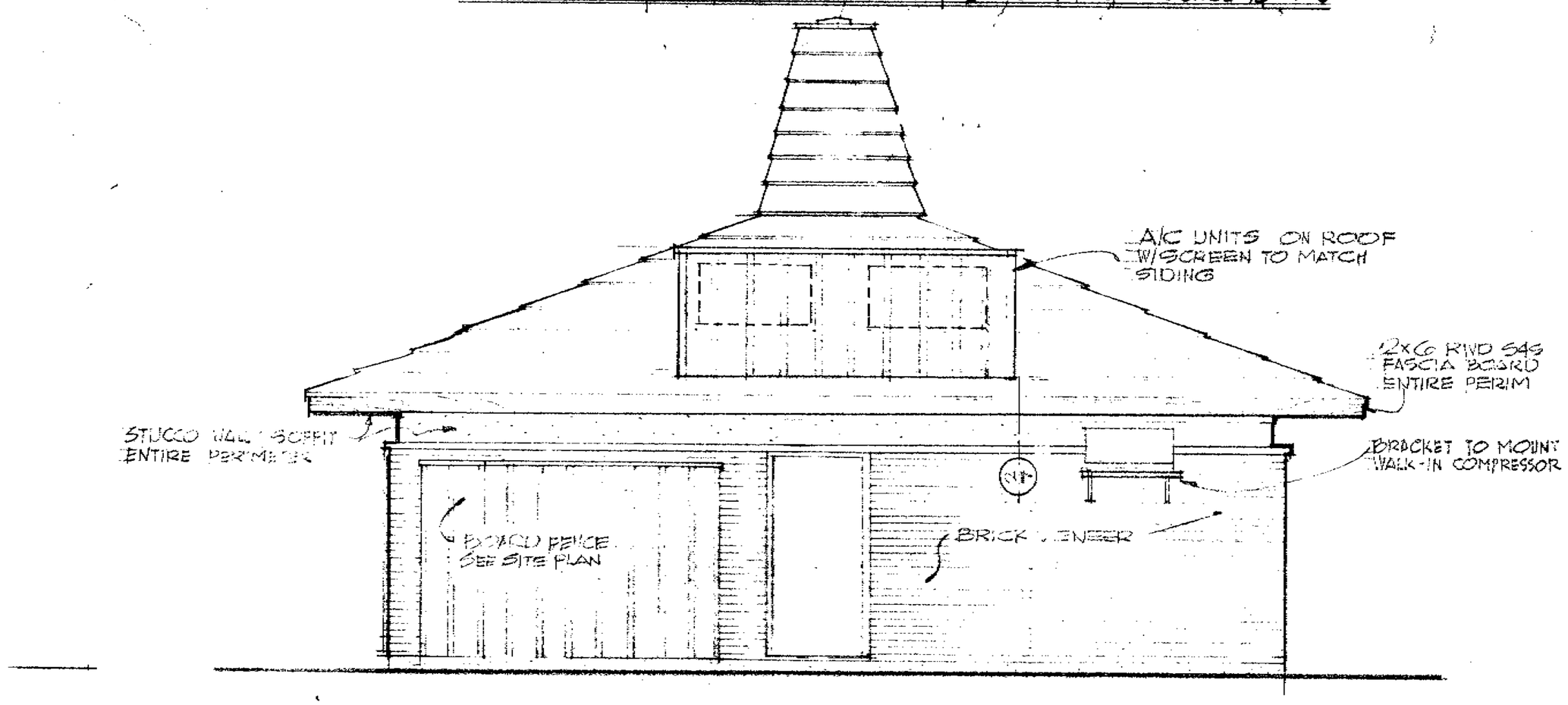

REAR ELEVATION SCALE 1/4" = 1'-0"

BEST AVAILABLE

63664
~~63644~~

23

REGISTERED PROFESSIONAL ENGINEER RALPH RAMBOTTONI, JR. No 17[illegible] STATE OF [illegible]

PIZZA HUT INC.

Ralph Rambottoni Jr. Consulting Engineers	DRAWN RR	DATE: 10/25/[illegible]	SHEET 6
		REV. NO.	
	EXTERIOR ELEVATIONS		OF

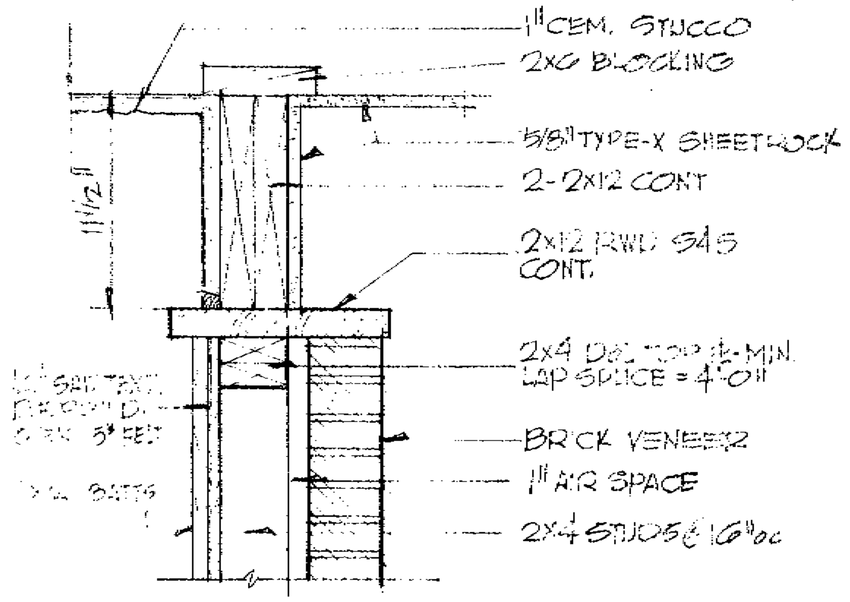

DETAIL 1/7

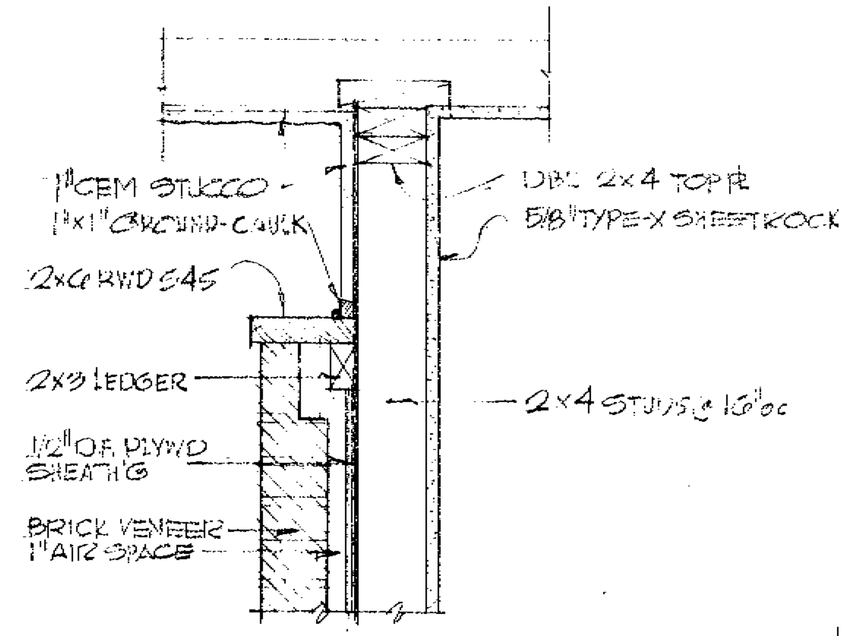

DETAIL 2/7

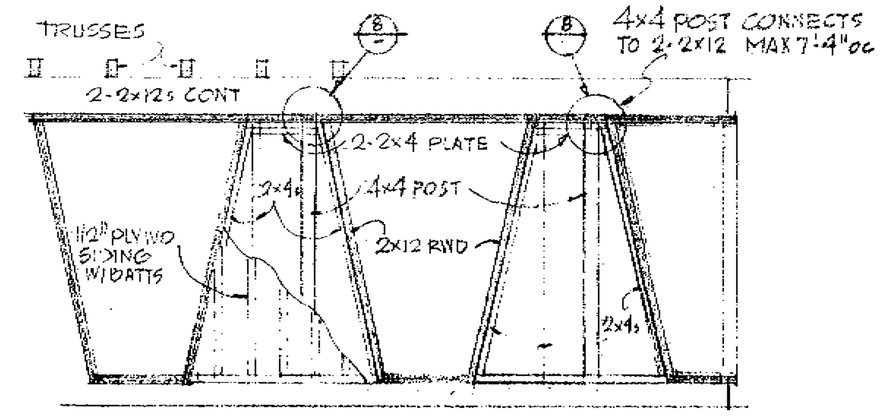

TYPICAL WALL FRAMING
SCALE 1/4" = 1'-0"

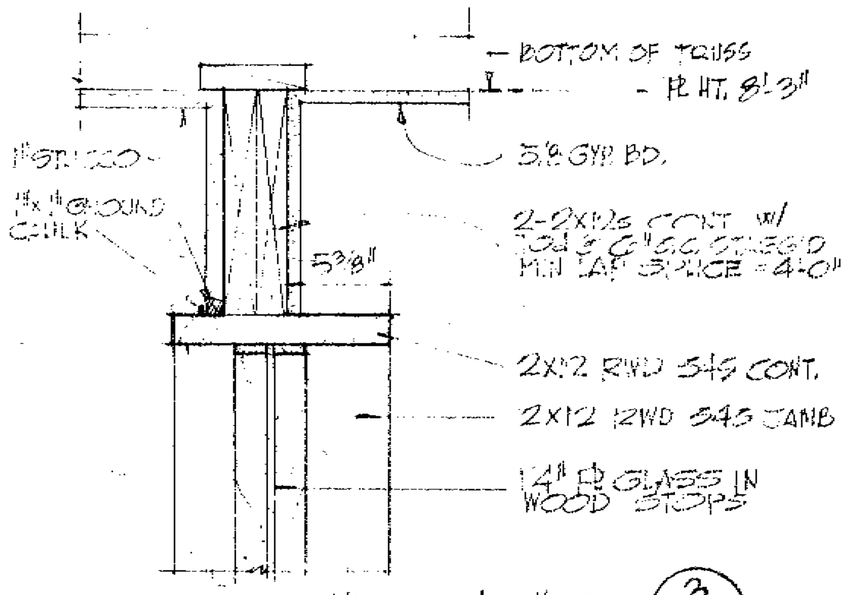

WINDOW HEAD 3/7

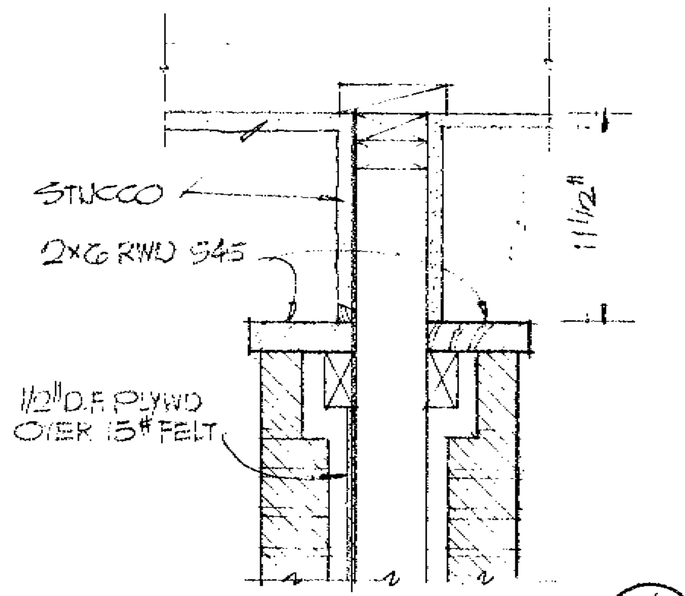

DETAIL 4/7

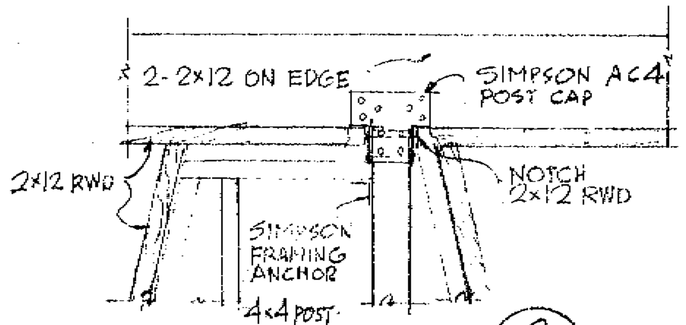

DETAIL 8/7

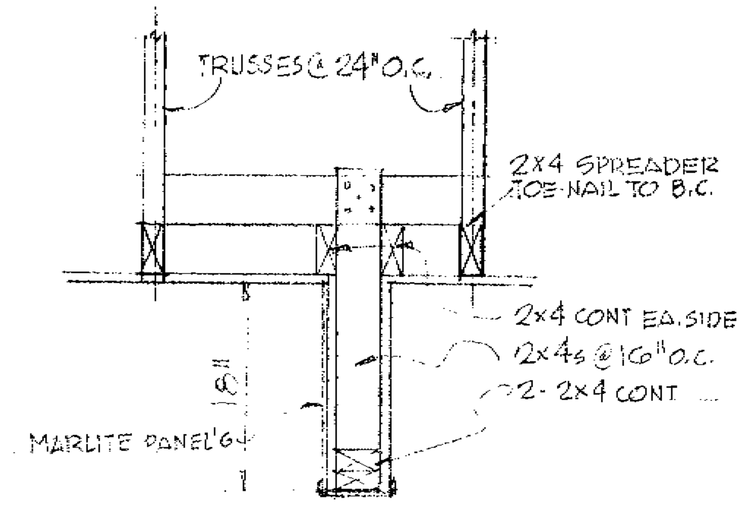

DETAIL 9/7

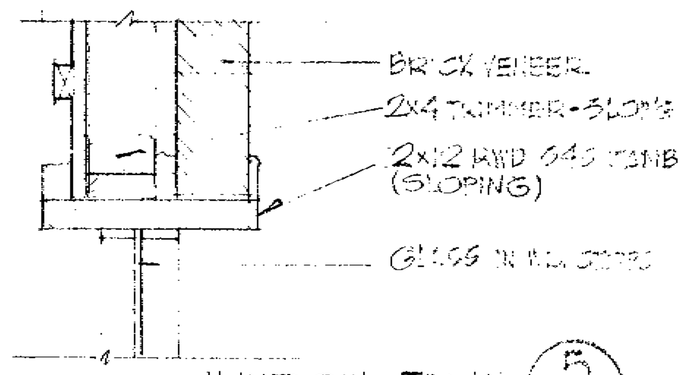

WINDOW JAMB 5/7

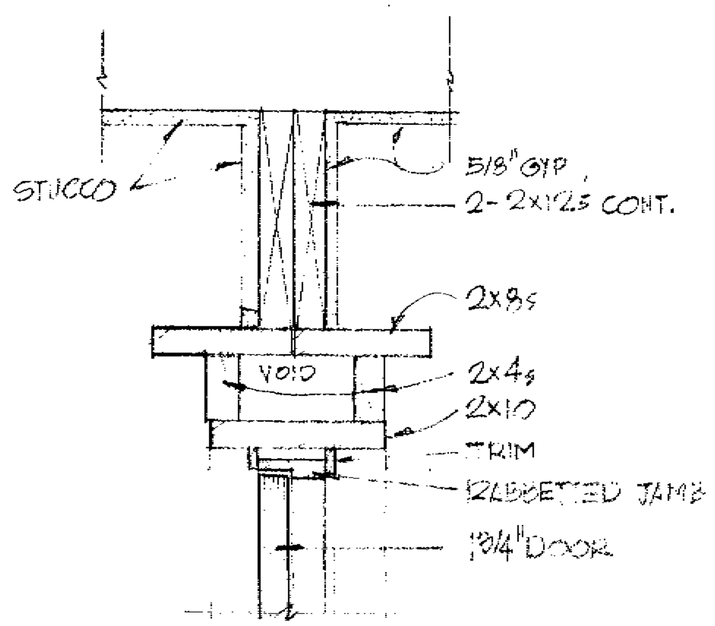

DETAIL 7/7

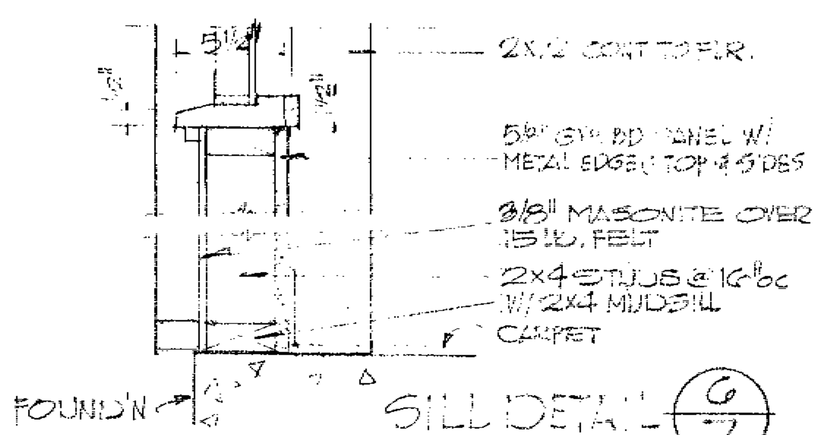

SILL DETAIL 6/7

WALL SECTIONS
SCALE 1 1/2" = 1'-0"

NOTE: SEE EXTERIOR ELEV.

63664
~~63644~~

24

REGISTERED PROFESSIONAL ENGINEER
RALPH RAPATTONI JR.
No. 17505
CIVIL
STATE OF CALIFORNIA

PIZZA HUT INC.

	DRAWN: R.R.	DATE: 10/29/69	SHEET 7
		REV. NO.	
	MISC. DETAILS		OF [redacted]

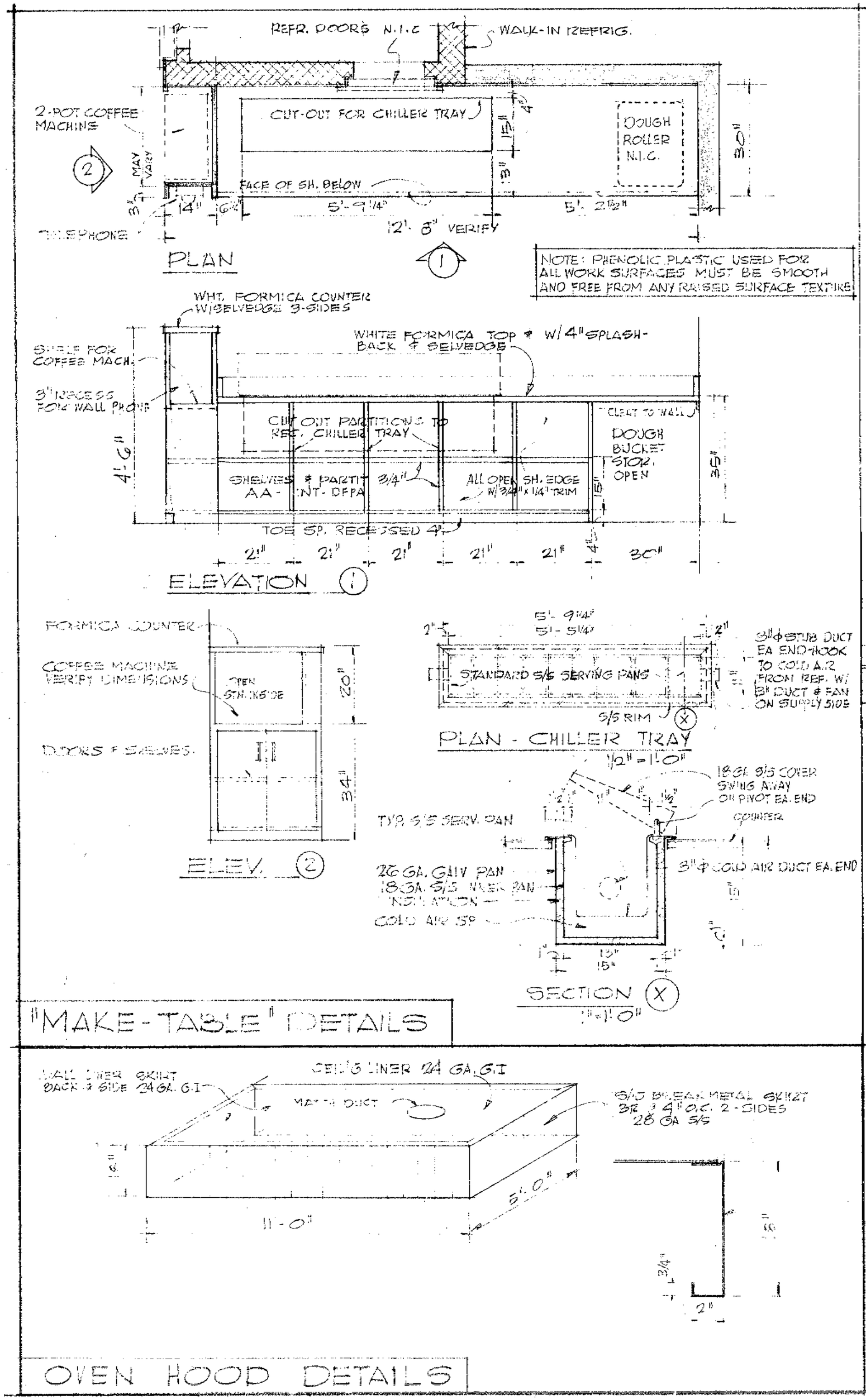

"MAKE-TABLE" DETAILS

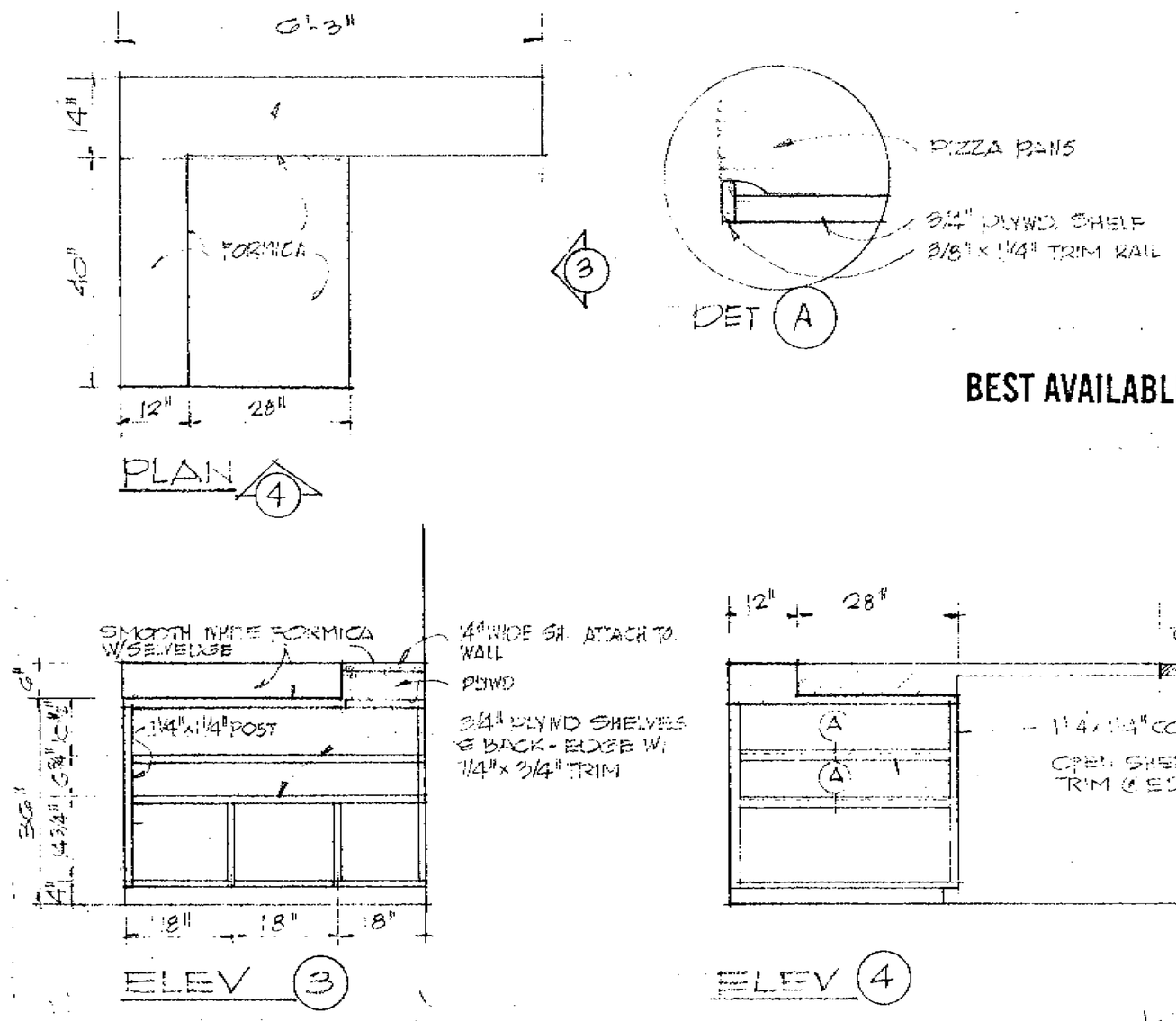

CUTTING TABLE DETAILS

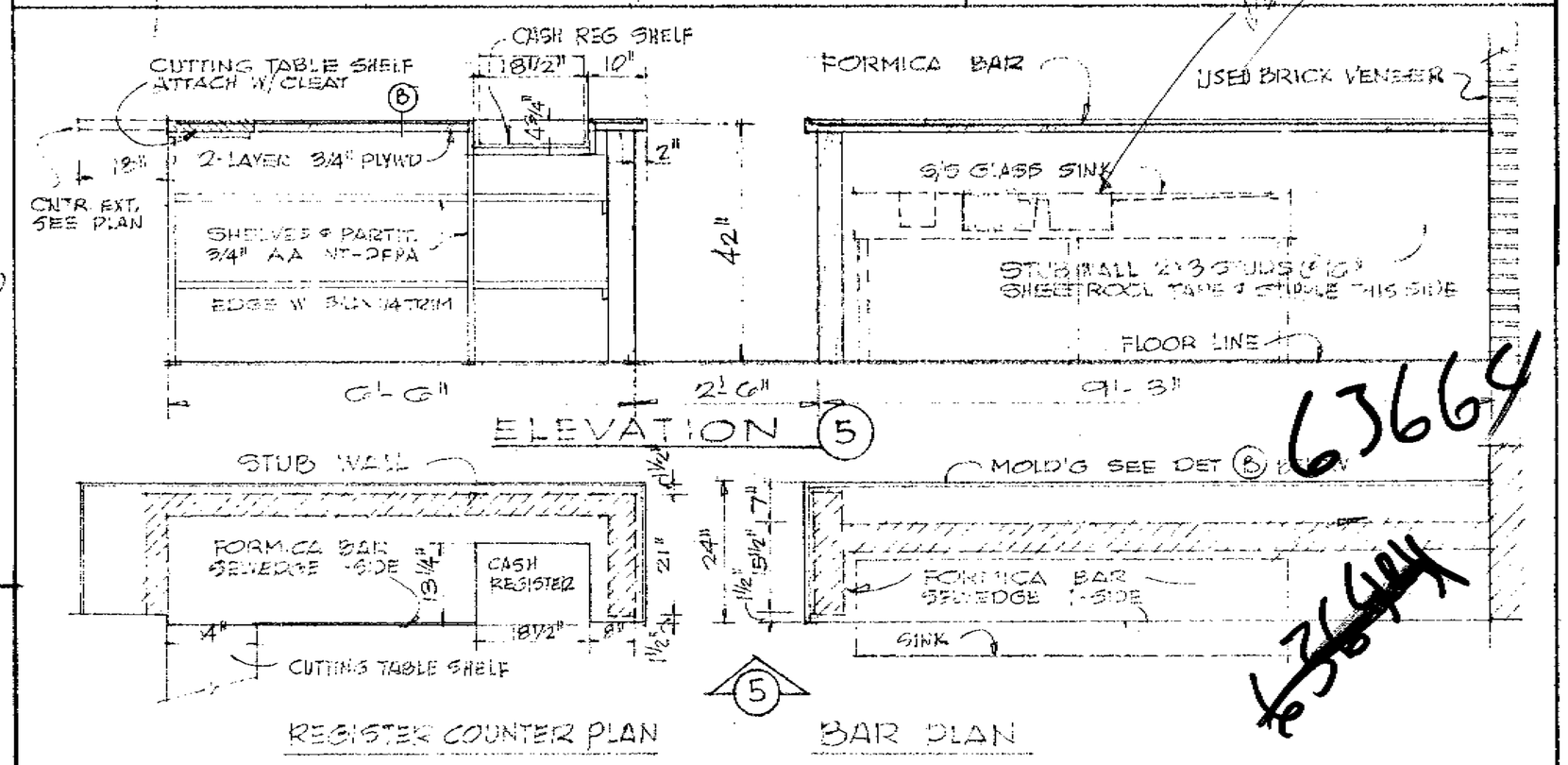

63664

REGISTER COUNTER & BAR DETAILS

OVEN HOOD DETAILS

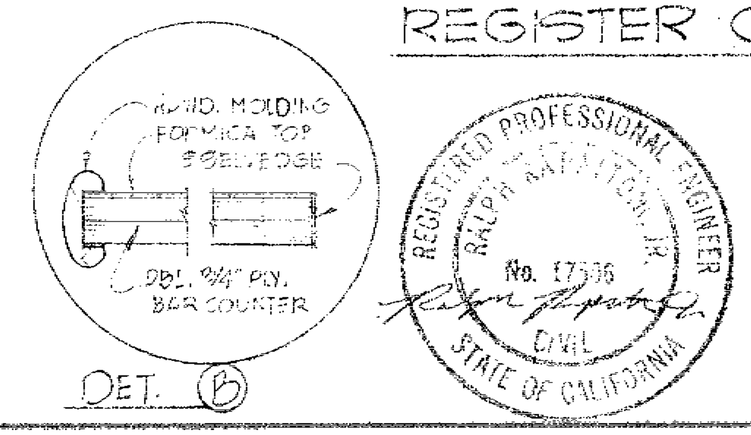

25

PIZZA HUT INC.

Ralph Rapattoni Consulting Engineer 344 Village Lane Los Gatos, Cal. 95030	DRAWN: R.R.	DATE: 10/28/69	SHEET 8
		REV. NO	
	INTERIOR DETAILS		OF 1[illegible]

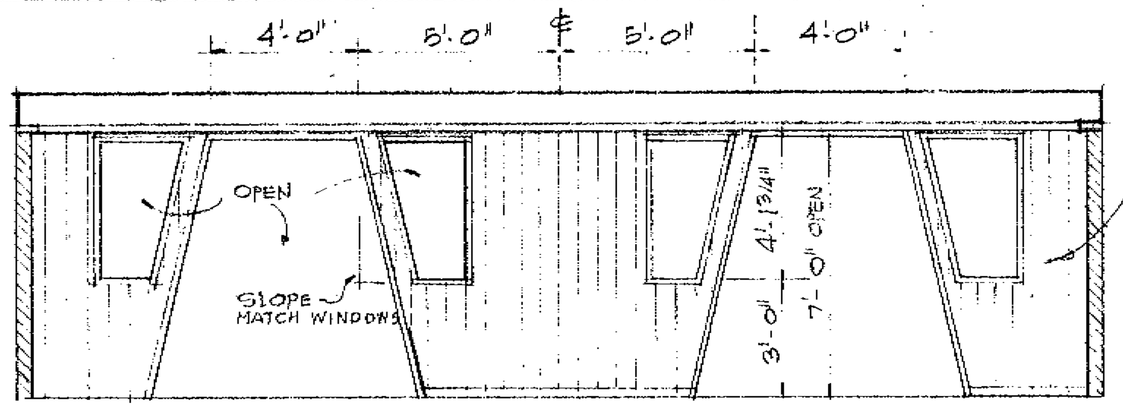

OPTIONAL SCREEN WALL DINING ROOM (1/9)

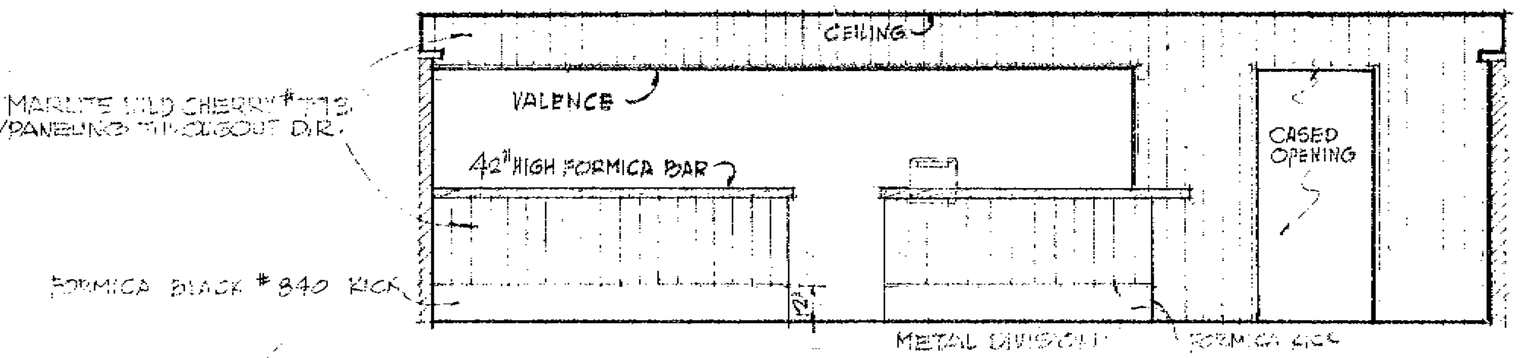

BAR & SERVING AREA - DINING ROOM (2/9)

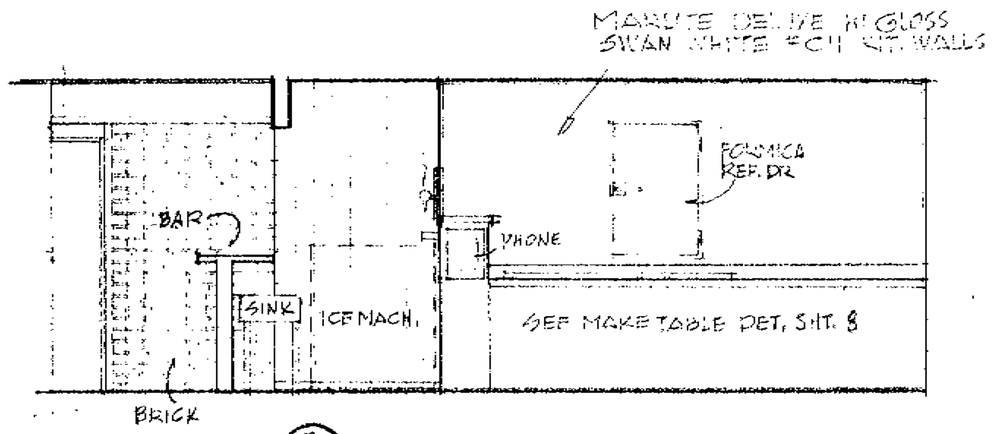

KITCHEN (3/9) LEFT ELEV.

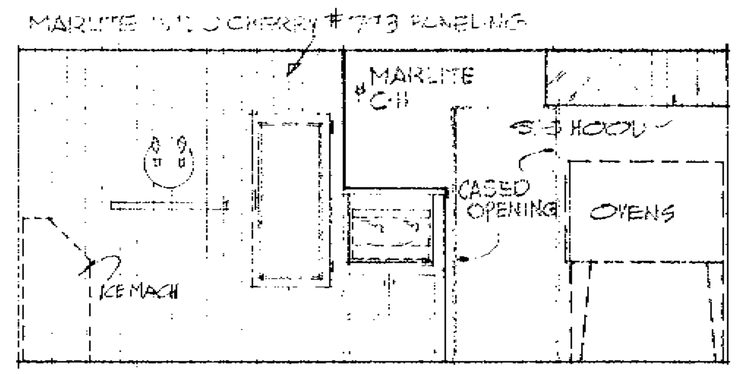

KIT-SERVING (4/9) REAR ELEV

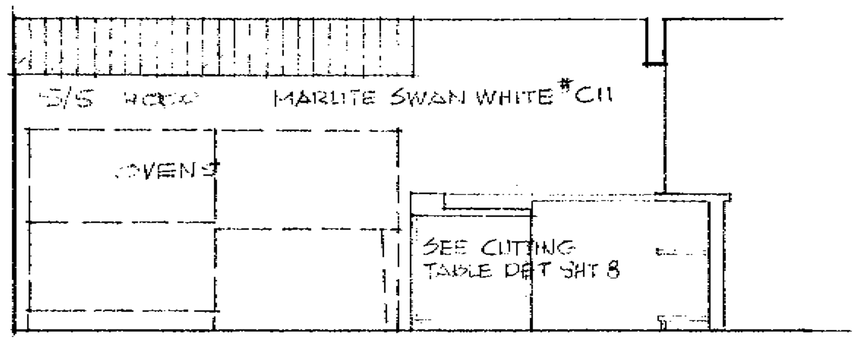

KITCHEN (5/9) RIGHT ELEVATION

INTERIOR ELEVATIONS SCALE 1/4"=1'-0"

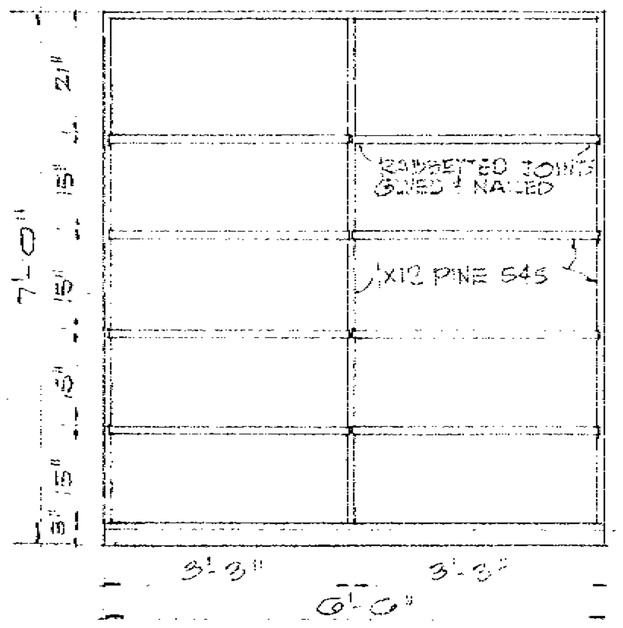

PORTABLE SHELVING
1/2"=1'-0"

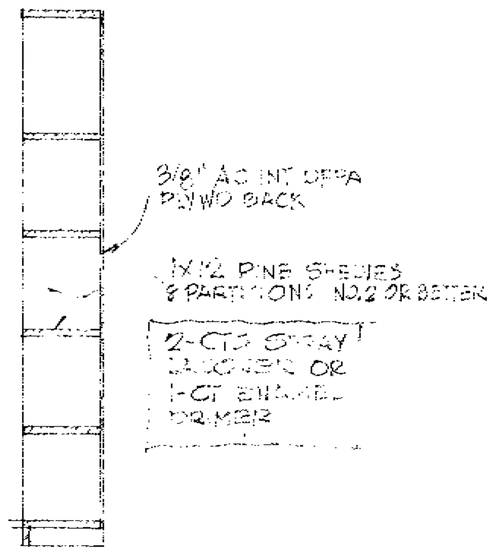

END

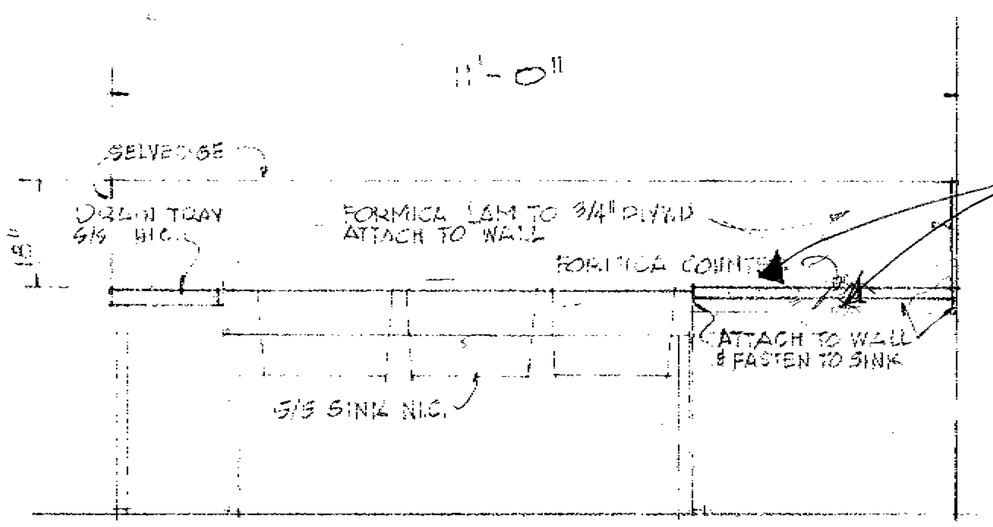

Provide 12" metal backsplash & 2 metal drainboards.

SINK - CLEAN-UP ROOM
1/2"=1'-0"

63669
~~12/6~~ 44

26

REGISTERED PROFESSIONAL ENGINEER
RALPH KAPATTONI
No. 12148
CIVIL
STATE OF CALIFORNIA

PIZZA HUT INC.

Ralph Kapattoni Consulting Engineer 344 Village Lane Los Gatos Cal. 95030	DRAWN: R.R.	DATE: 10/23/69	SHEET 9
		REV NO	
	INTERIOR ELEVATIONS		OF

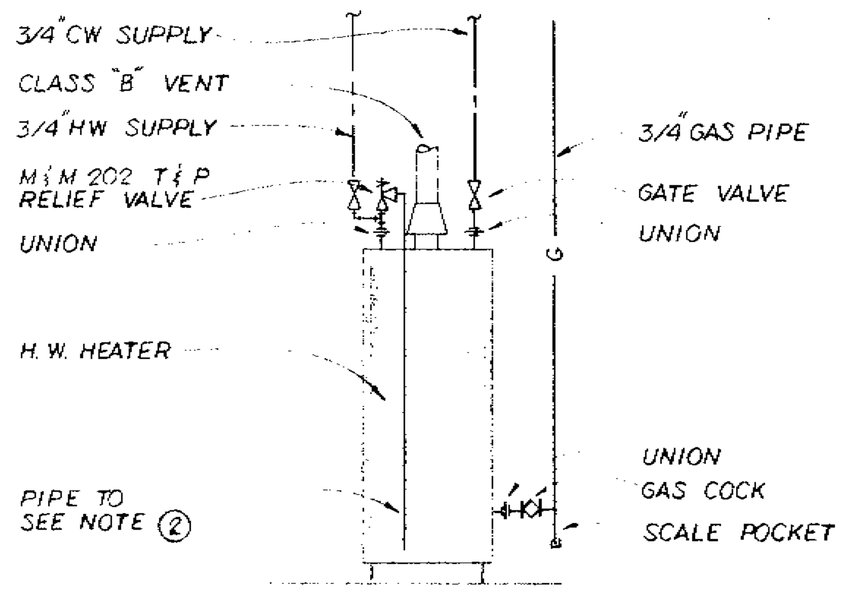

WATER HEATER PIPING DETAIL

No Scale

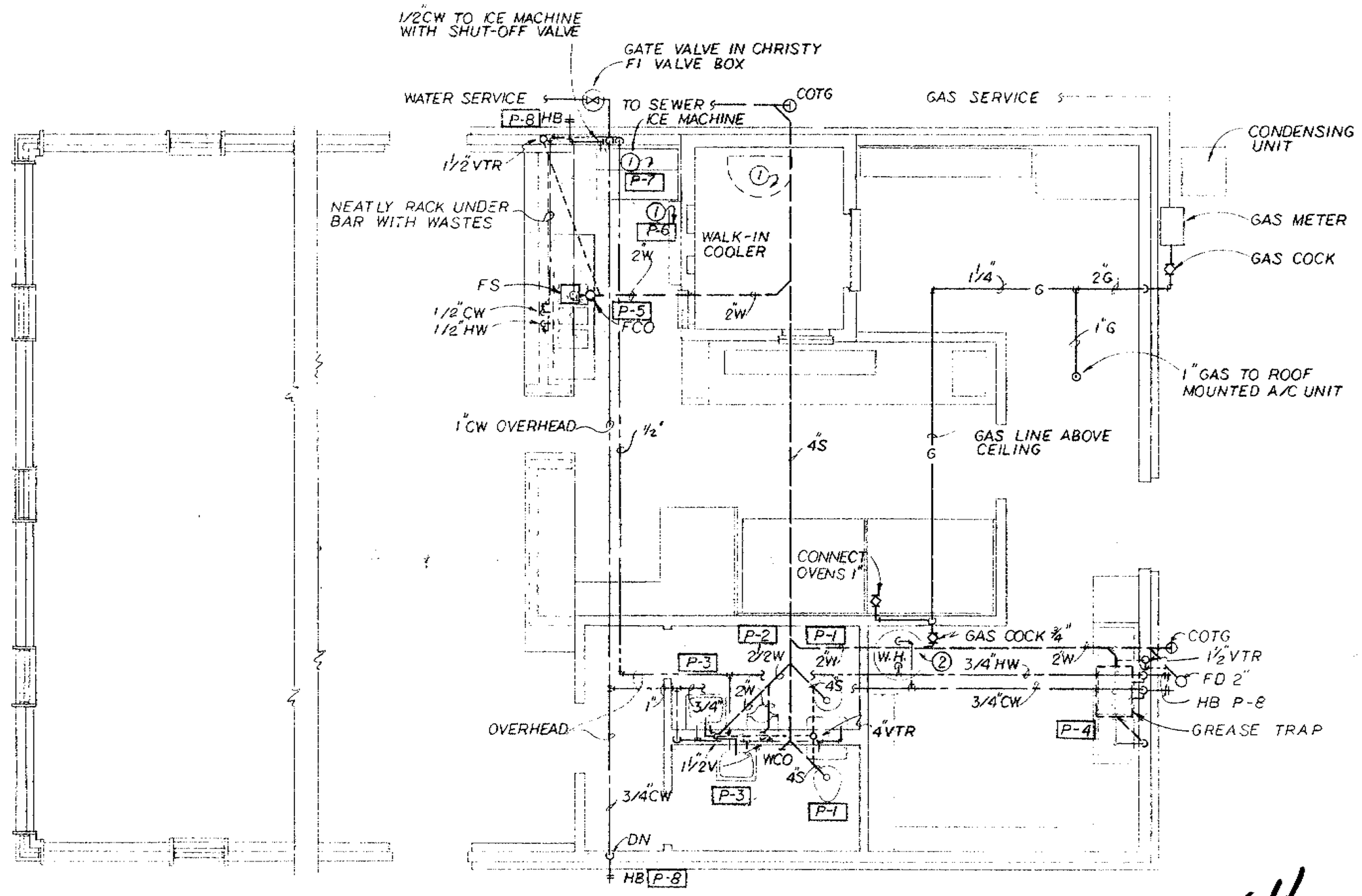

PLUMBING PLAN

Scale 1/4" = 1'-0"

LEGEND

SYMBOL	DESCRIPTION
	SOIL OR WASTE ABOVE GRADE
	SOIL OR WASTE BELOW GRADE
	VENT
	CW DOMESTIC COLD WATER
	HW DOMESTIC HOT WATER
COTG	CLEANOUT TO GRADE
WCO	WALL CLEANOUT
V	VENT
VTR	VENT THRU ROOF
	GATE VALVE
	PLUG VALVE OR GAS COCK
HB	HOSE BIBB
	UNION
	PIPE UP
	PIPE DOWN
FD	FLOOR DRAIN
WH	WATER HEATER
G	GAS
PI	FIXTURE NUMBER
①	NOTE NUMBER
FS	FLOOR SINK
FCO	FLOOR CLEANOUT

FIXTURE SCHEDULE

TAG	DESCRIPTION	BRANCH S W	V	CW	HW	REMARKS
P-1	WATER CLOSET	4	2	1/2	–	
P-2	URINAL	2	1 1/2	3/4	–	
P-3	LAVATORY	2	1 1/2	1/2	1/2	
P-4	POT SINK	2	1 1/2	1/2	1/2	
P-5	BAR SINK	2	–	1/2	1/2	INDIRECT WASTE
P-6	BEER TRAY	1/2	–	–	–	" "
P-7	ICE MACHINE	1/2	–	1/2	–	" "
P-8	HOSE BIBB	–	–	3/4	–	

NOTES

① COPPER CONDENSATE DRAIN RUN TO FLOOR SINK. CONCEAL NEATLY IN WALLS & RACK UNDER BAR.

② WATER HEATER RELIEF DRAIN PIPE TO OUTSIDE.

63664

~~63644~~

27

PIZZA HUT INC

P. R. [illegible] & ASSOC. CONSULTING ENGINEERS 507 STOCKTON AVE. SAN JOSE, CA. 95126 (408) 291-0700	Ra[illegible]	Drawn by: GT	Date: 10/29/69
			Rev:
		PLUMBING PLAN	SHEET 10 OF [illegible]

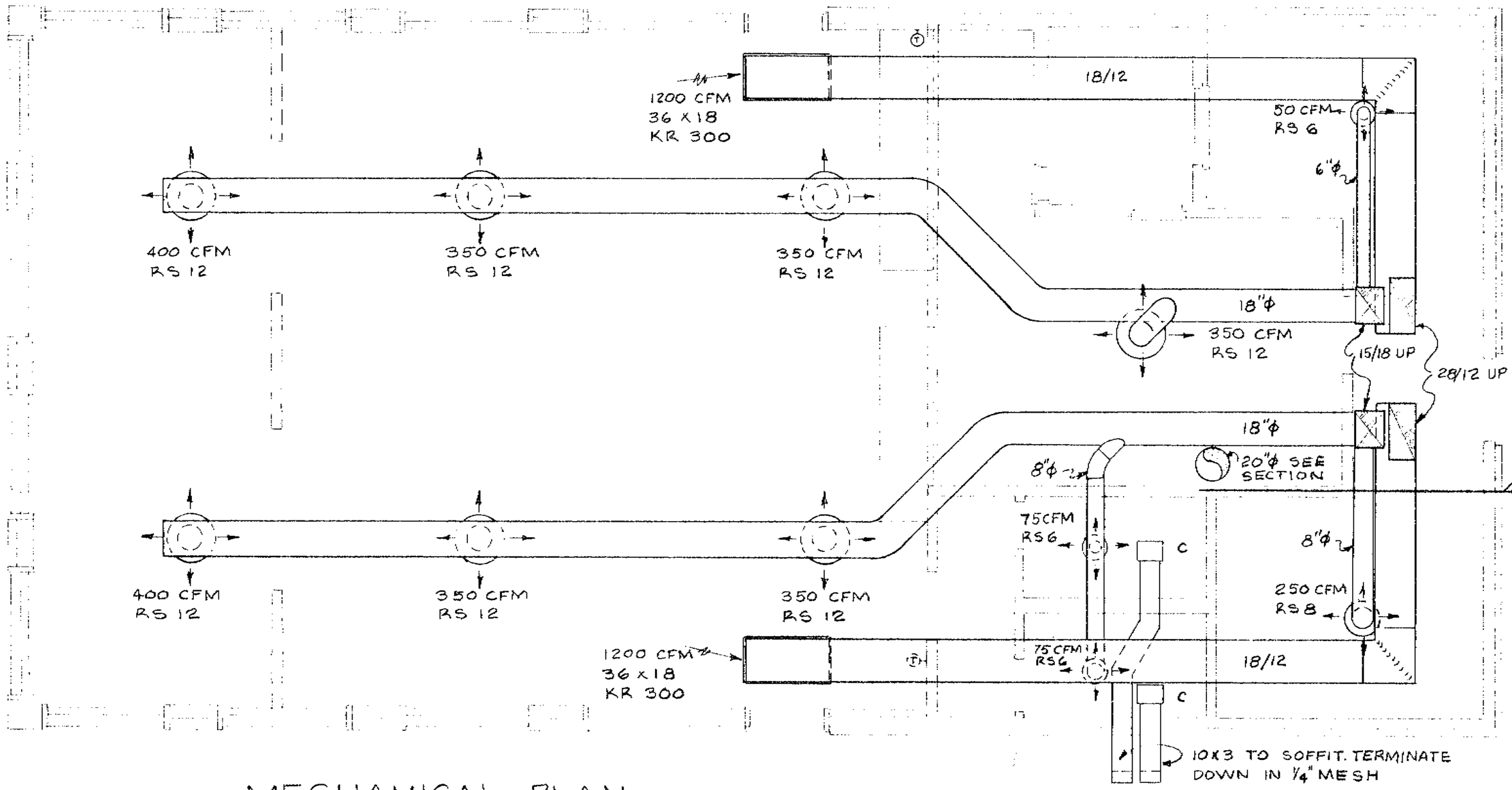

MECHANICAL PLAN
SCALE: 1/4" = 1'-0"

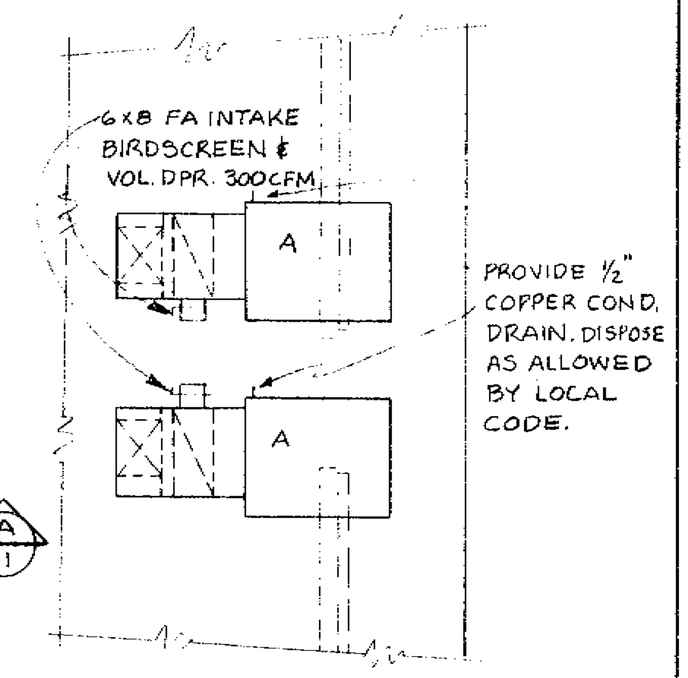

PART. ROOF PLAN
SCALE: 1/4" = 1'-0"

EQUIPMENT SCHEDULE		
TAG	DESCRIPTION	ELEC. CHAR.
A	A/C UNIT CARRIER 48DC 005 1500 CFM @ 0.4" EXT. SP COMPLETE WITH FILTERS & REMOTE CONTROL CENTER.	230V, 1φ 40.4 A
B	EXHAUST FAN CHAMPION #3 PIGGY-BAK VENT SET	120V, 1φ 1/2 HP
C	TOILET EXHAUST PENN Z-60	120V, 1φ

NOTE: 1. DIFFUSERS & RETURNS SHALL BE ADP.
2. DUCTS INSIDE SHALL BE "FIBERGLAS" ROUND. EXTERIOR DUCTS SHALL BE LINED W/1" MATTE FACED LINER.
3. PAINT DUCT INTERIOR & OUTLETS FLAT BLACK.

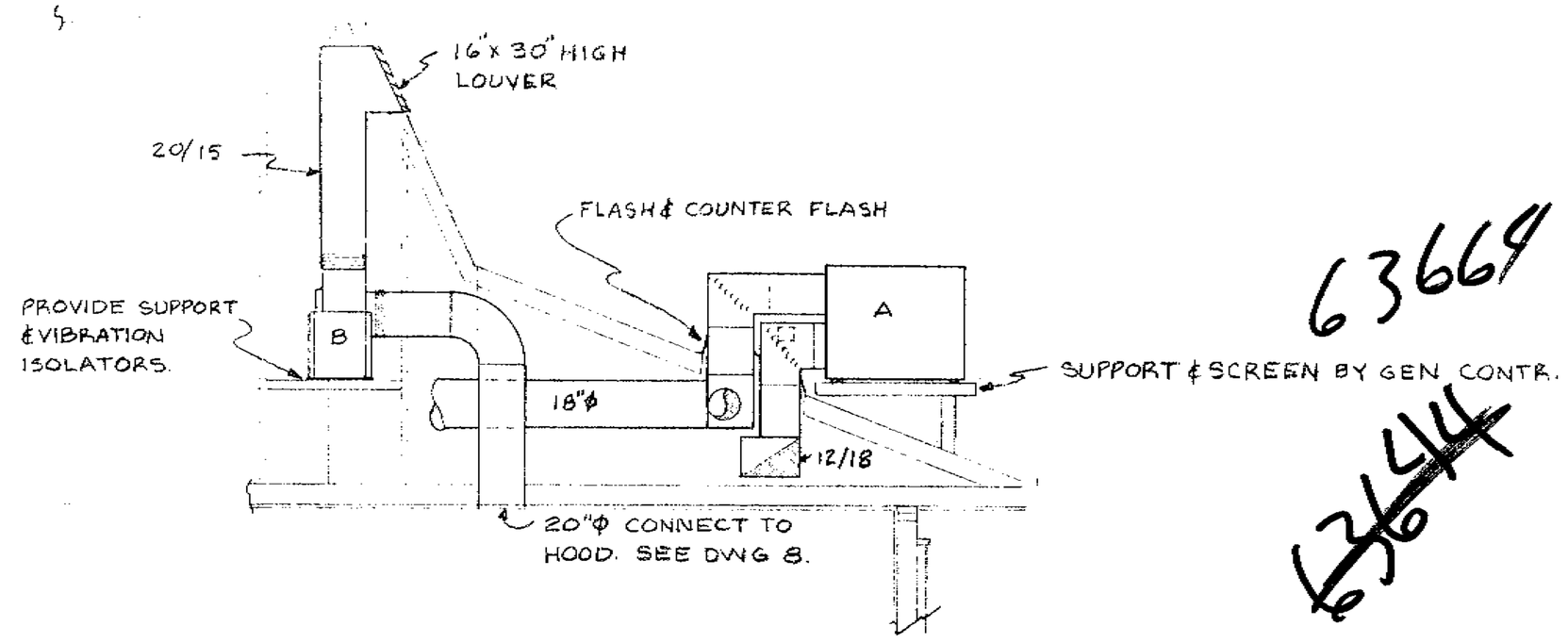

SECTION A/11
SCALE: 1/4" = 1'-0"

63664

~~63644~~

28

PIZZA HUT INC

P. M. [illegible] & ASSOC. [illegible]	[illegible]	Drawn by: MS	Date: 10/23/69	SHEET 11
			Rev:	
	Los Gatos, [illegible]	MECHANICAL PLAN		

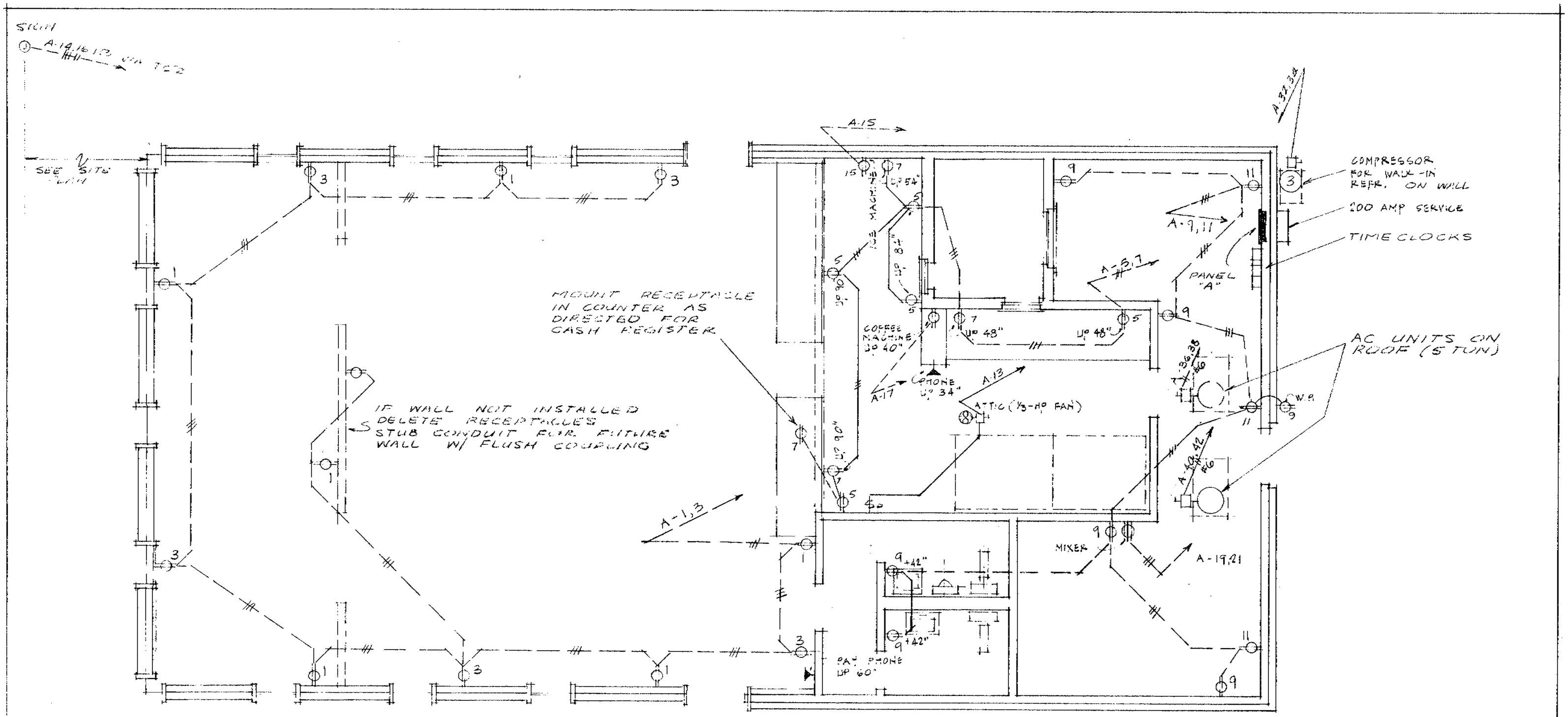

POWER PLAN

SCALE: 1/4" = 1'-0"

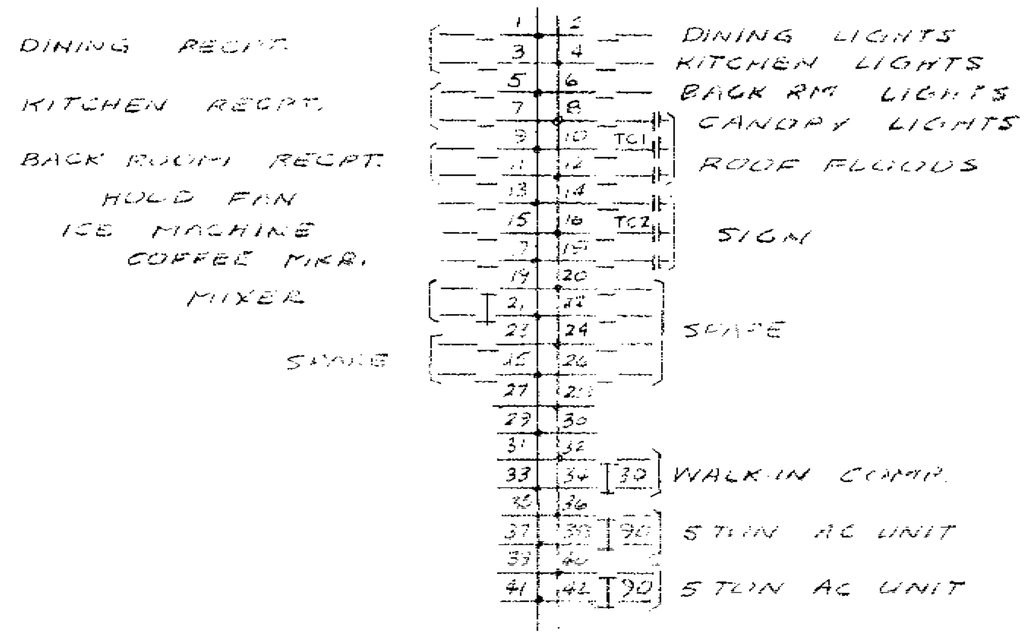

PANEL "A"

D QO-42-FLUSH

TC-1 AND TC-2 - 3 POLE 40A TIMECLOCKS TORK #7300

LOAD SUMMARY

LIGHTS	11 KW
RECPT	5 KW
KITCHEN APPL.	7 KW
AC UNITS	21 KVA
TOTAL	44 KVA
AT 1Ø 3W 240V	183 AMPS

(AT 3Ø 4W 208V = 122A)

120/240V - 3W - 1Ø SERVICE IS SHOWN FOR 120/240V - 4W - 3Ø DELTA OR 120/208V - 4W - 3Ø WYE SERVICE CONSULT ENGINEER.

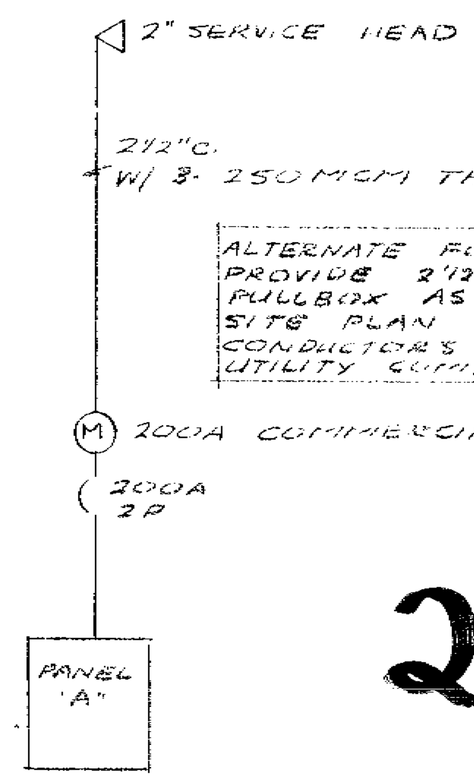

FEEDER DIAGRAM

63664

ALTERNATE FOR UG SERVICE PROVIDE 2 1/2"C TO POLE OR PULLBOX AS SHOWN ON SITE PLAN CONDUCTORS WILL BE BY UTILITY COMPANY

63664

29

REGISTERED PROFESSIONAL ENGINEER
ELECTRICAL
STATE OF CALIFORNIA

ELECTRICAL PLAN

SHEET 12 OF

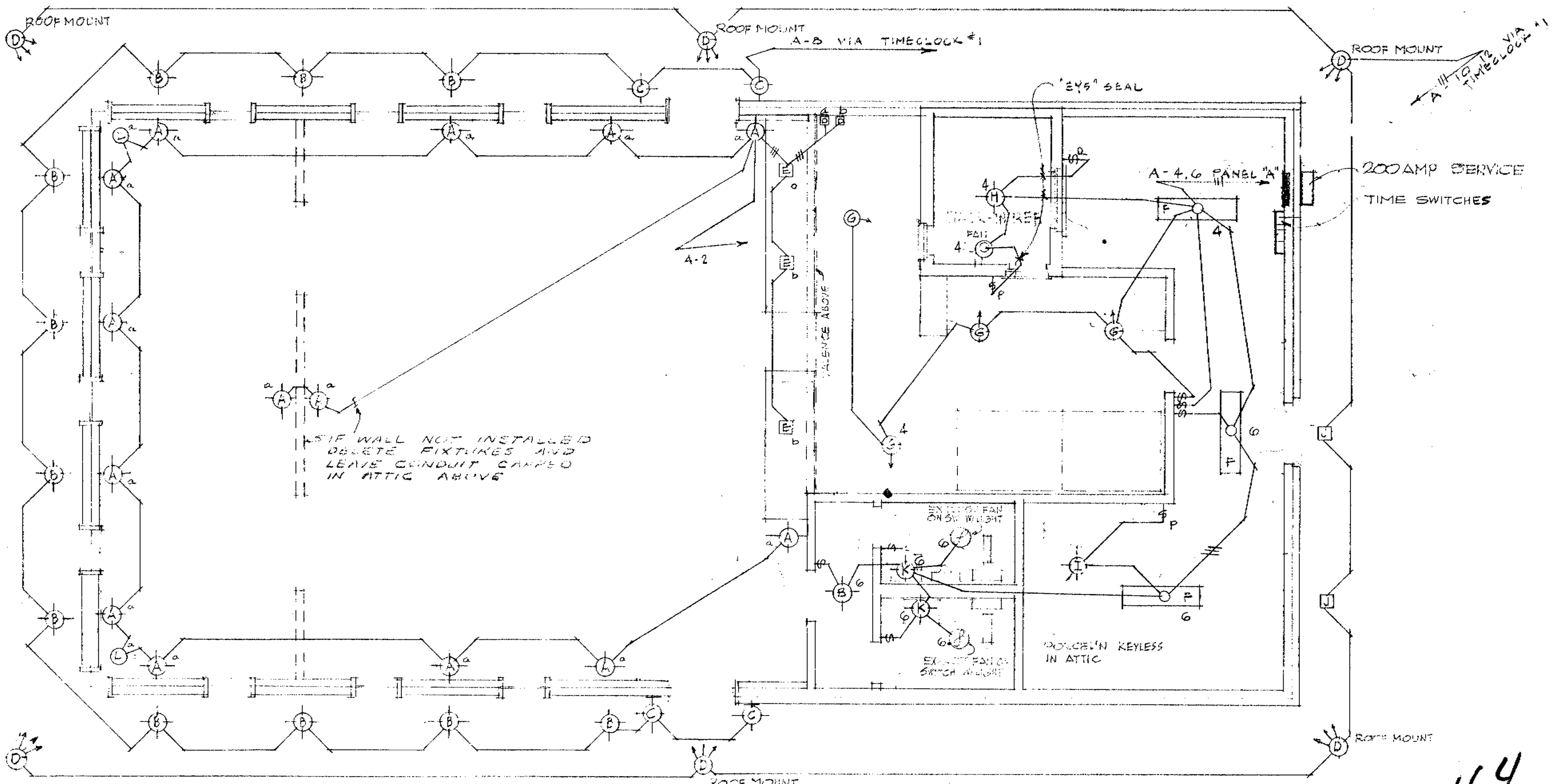

LIGHTING PLAN 1/4" = 1'-0"

LIGHT FIXTURE SCHEDULE

SYM	NO. REQ'D	MANUFACTURER & MODEL NO.	MOUNTS	FINISH	REMARKS	LAMPS
A	12	MOE LIGHT [illegible]	WALL-FL	BLACK		60 A IF
B	12	PRESCOLITE 7033	EAVE	BLACK	4½" D x 7" CYLIND.	75 A IF
C	4	MOE LIGHT M-812-7	WALL 72"	BLACK		100 A IF
D	6	STEBER S-393 (3-FIXT)	ROOF MOUNT	STD	[illegible] BOX AS REQ'D	3-150 PAR/FL
E	3	MOE # KU 321	RECESSED	STD.	W/ LOUVRE	75W-R30, SP
F	3	KEYSTONE #NE 240	CEILING	STD.	W 1½" SPACERS	2-F40/CW
G	3	STEBER #S-632-S-W	CEILING	WHITE	AIM AS DIRECTED	2-150 PAR/FL
H	1	STEBER #VB-152	CEILING	STD.	VAPOR PROOF	100 W
I	1	PORCELAIN KEYLESS	CEILING	STD	IN ATTIC	100 W
J	3	MOE LIGHT R5-R5A-R51	EAVE RECESSED	STD		150 W
K	2	PRESCOLITE [illegible]	WALL 84"	STD.		150 W
L	2	BY PIZZA HUT	CEILING		HANG AS DIRECTED	3-50 W

ELECTRICAL LEGEND

- FLUORESCENT FIXTURE
- RECESSED FIXTURE
- SURFACE OR BRACKET FIXTURE
- BULLET
- SINGLE POLE SWITCH, 15A., BRYANT #4801-W, +52"
- PILOT SWITCH, BRYANT #4801-PLR, +52"
- FLUSH DIMMER - "a" 1800W AUTO TRANSFORMER TYPE LUXTROL #WBD-1800 "b" 450W AUTO TRANSFORMER TYPE #WBD-450
- DUPLEX RECEPTACLE BRYANT #5252-W +12" UNLESS NOTED
- WP RECEPTACLE PASS & SEYMOUR #6207 W/ #4500 COVER +24"
- 220V, 20A RECEPTACLE BRYANT #5462
- TELEPHONE OUTLET 4SQ BOX W/ 1GANG RING + PLATE - RUN 3/4"C TO ATTIC
- FAN HOOK-UP
- CLOCK OUTLET
- DISCONNECT SWITCH WP IF REQUIRED
- EMT
- RIGID STEEL OR PVC CONDUIT

63664

30

PIZZA HUT INC.

Ralph Rapattoni
Consulting Engineer
[illegible]

ELECTRICAL PLAN

SHEET 13 OF [illegible]

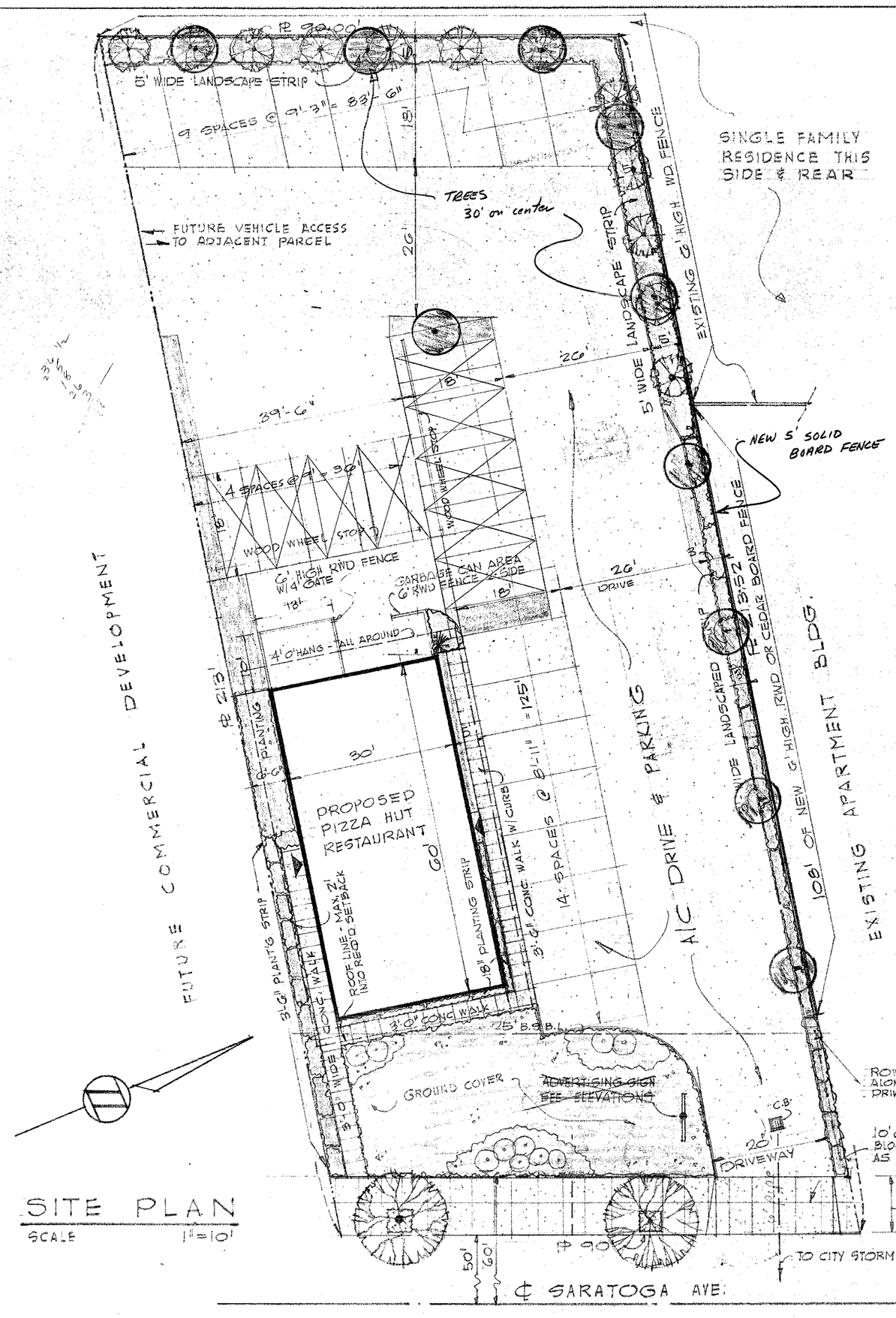

SITE PLAN

SCALE 1"=10'

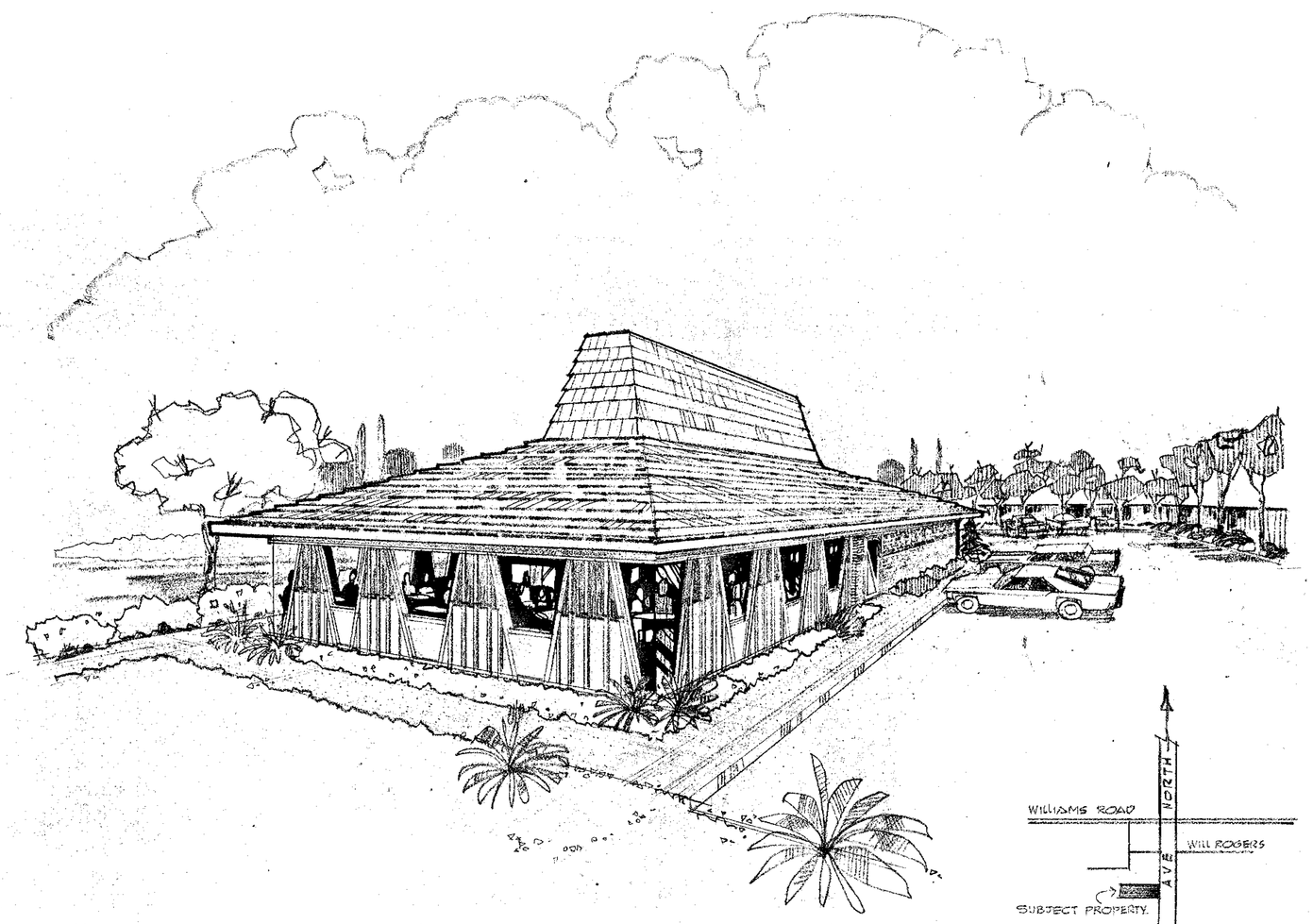

PERSPECTIVE VIEW

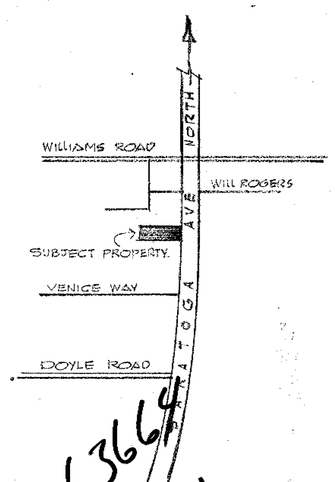

LOCATION PLAN

Planning

BUILDING AREAS & PARKING

BUILDING AREA - TOTAL	=	1800	SQ. FT.
DINING ROOM AREA	=	840	SQ. FT.
NO. OF SEATS	=	64	SEATS
PARKING REQUIRED	= 64/2½	= 26	CARS
	OR 840/40	= 21	CARS
PARKING PROVIDED		= 27	CARS

BEST AVAILABLE

BEST AVAILABLE

SITE PLAN

PIZZA HUT INC.
SARATOGA AVENUE
SAN JOSE, CALIFORNIA
BETWEEN WILLIAMS RD. & DOYLE RD.

Ralph Rapatteni
Consulting Engineer
344 Village Lane
Los Gatos, Cal. 95030

JOB NO.
DATE SEPT 16, 69
DRAWN BY RR

31

SHEET NO 1 OF TWO

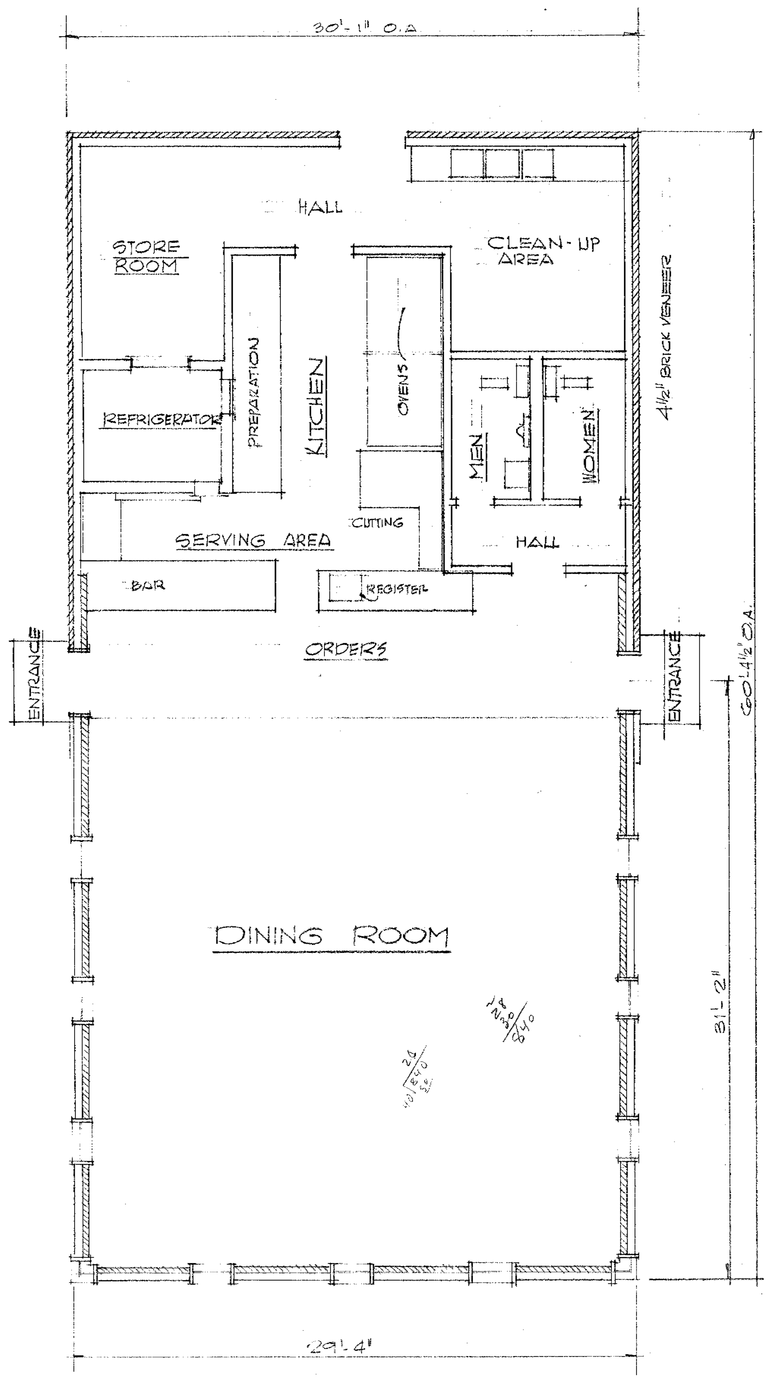

FLOOR PLAN
SCALE 1/4"=1'-0"

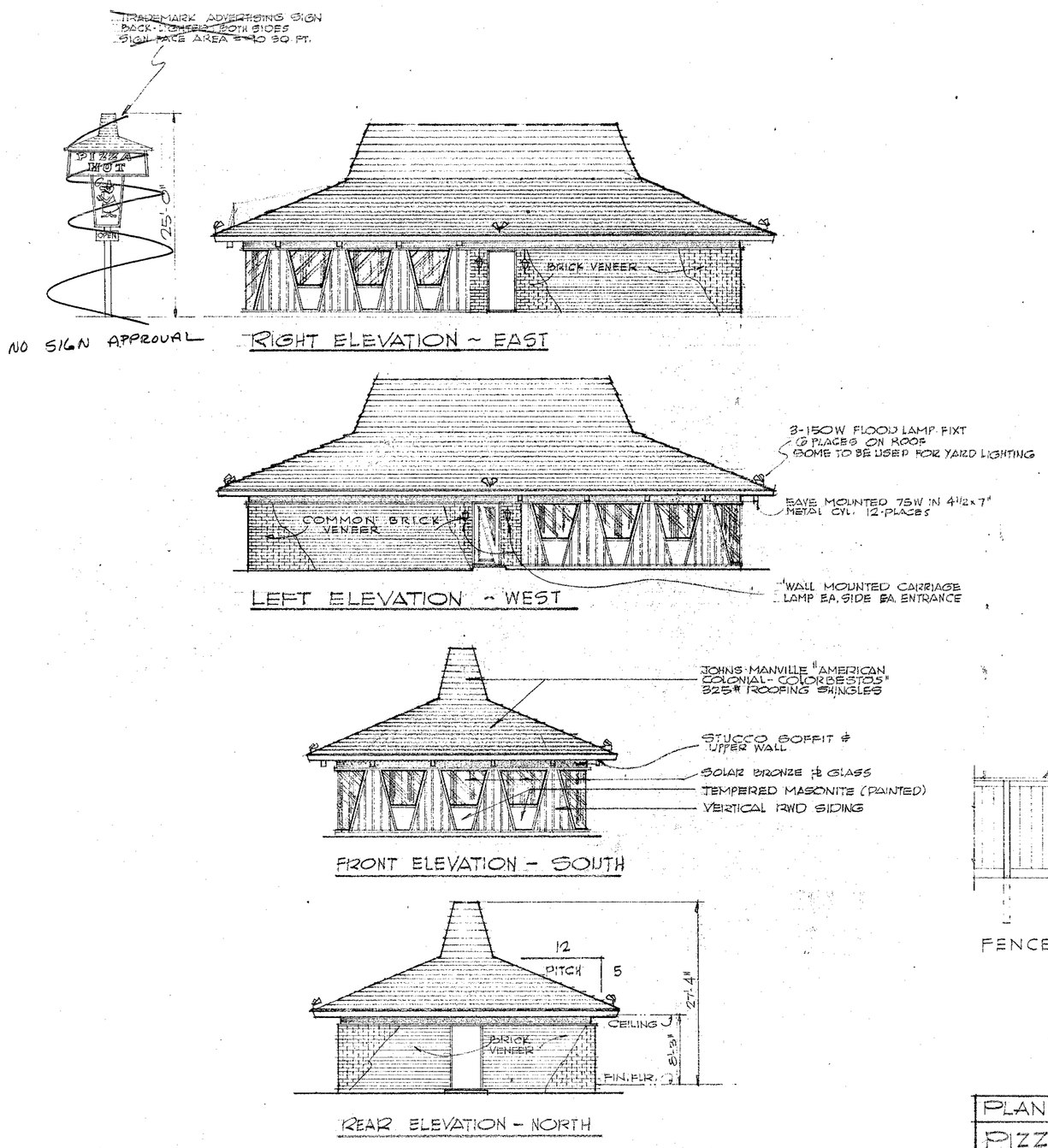

EXTERIOR ELEVATIONS
SCALE 1/8"=1'-0"

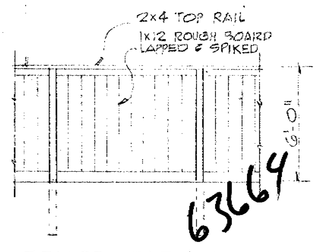

FENCE ELEVATION

63664

63664

PLAN & ELEVATIONS
PIZZA HUT INC.
SARATOGA AVENUE
SAN JOSE CALIFORNIA
BETWEEN WILLIAMS RD. & DOYLE RD.

Ralph Kanatani
Consulting Engineer
2211 Cotner Ave.
Los Angeles, Calif. 90030

JOB NO	
DRAWN BY	R.R.
SEPT 16, 1969	

32

SHEET 2 OF TWO

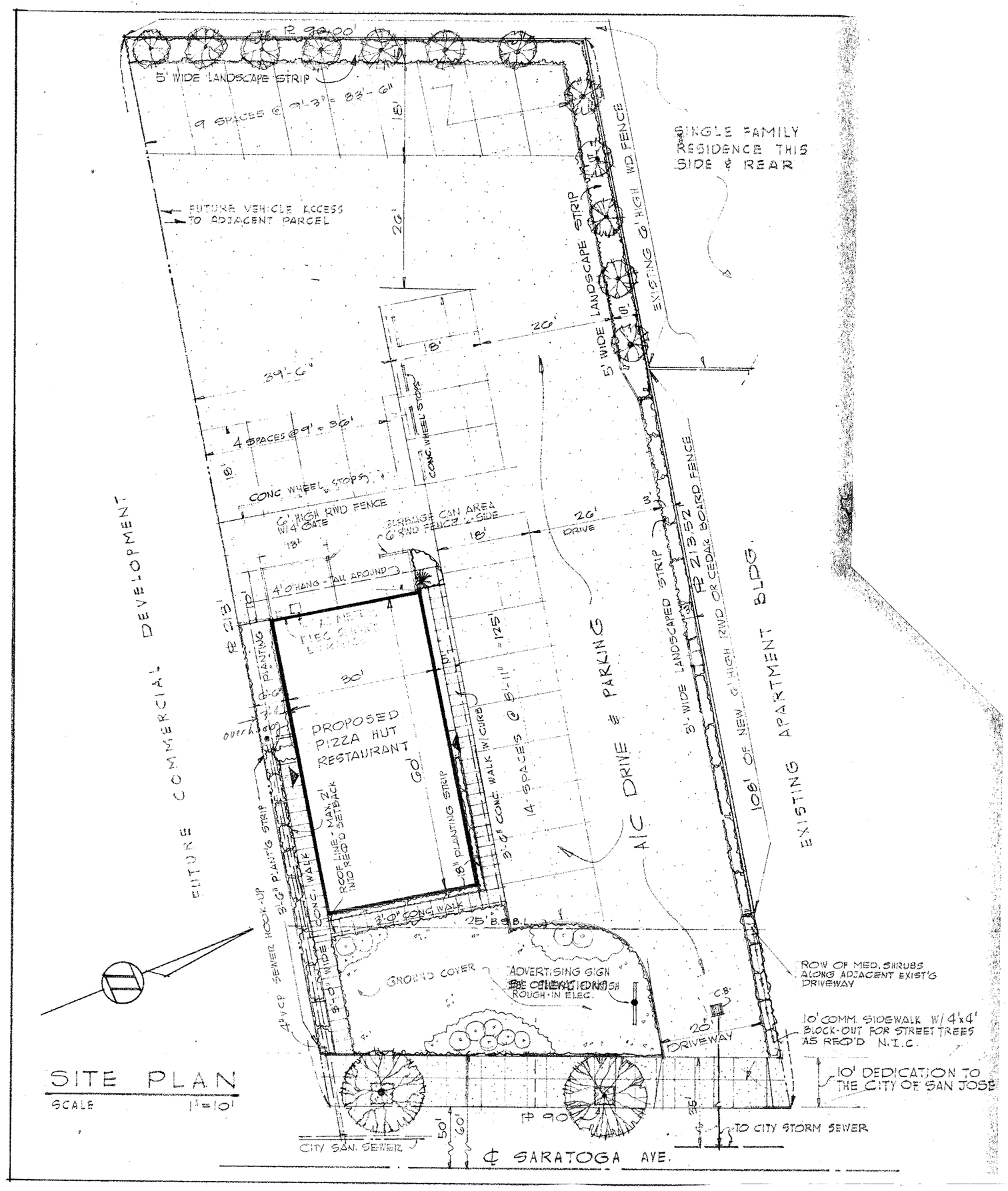

SITE PLAN

SCALE 1"=10'

BEST AVAILABLE

NOTES:

1. DEMOLITION
REMOVE ORCHARD TREES AS REQ'D
2. EARTHWORK
STRIP ALL AREAS WHICH RECEIVE BUILDING AND PAVING TO REMOVE ORGANIC MTL. AS REQ'D AND STOCKPILE FOR LANDSCAPING EXCESS TO BE REMOVED BY CONTRACTOR
3. SERVICES
CONTRACTOR TO VERIFY LOCATION OF ALL SERVICES
4. LANDSCAPING
NOT INCLUDED CONTRACT N.I.C.
5. PAVING
2" A/C OVER 4" AGG BASE

63664

~~63644~~

SARATOGA AVE STORE
SARATOGA AVE BETWEEN WILLIAMS RD. & DOYLE RD. SAN JOSE, CALIF.

33

PIZZA HUT OF WEST SAN JOSE INC.

DRAWN	DATE	SHEET
		1 OF ONE

SITE PLAN

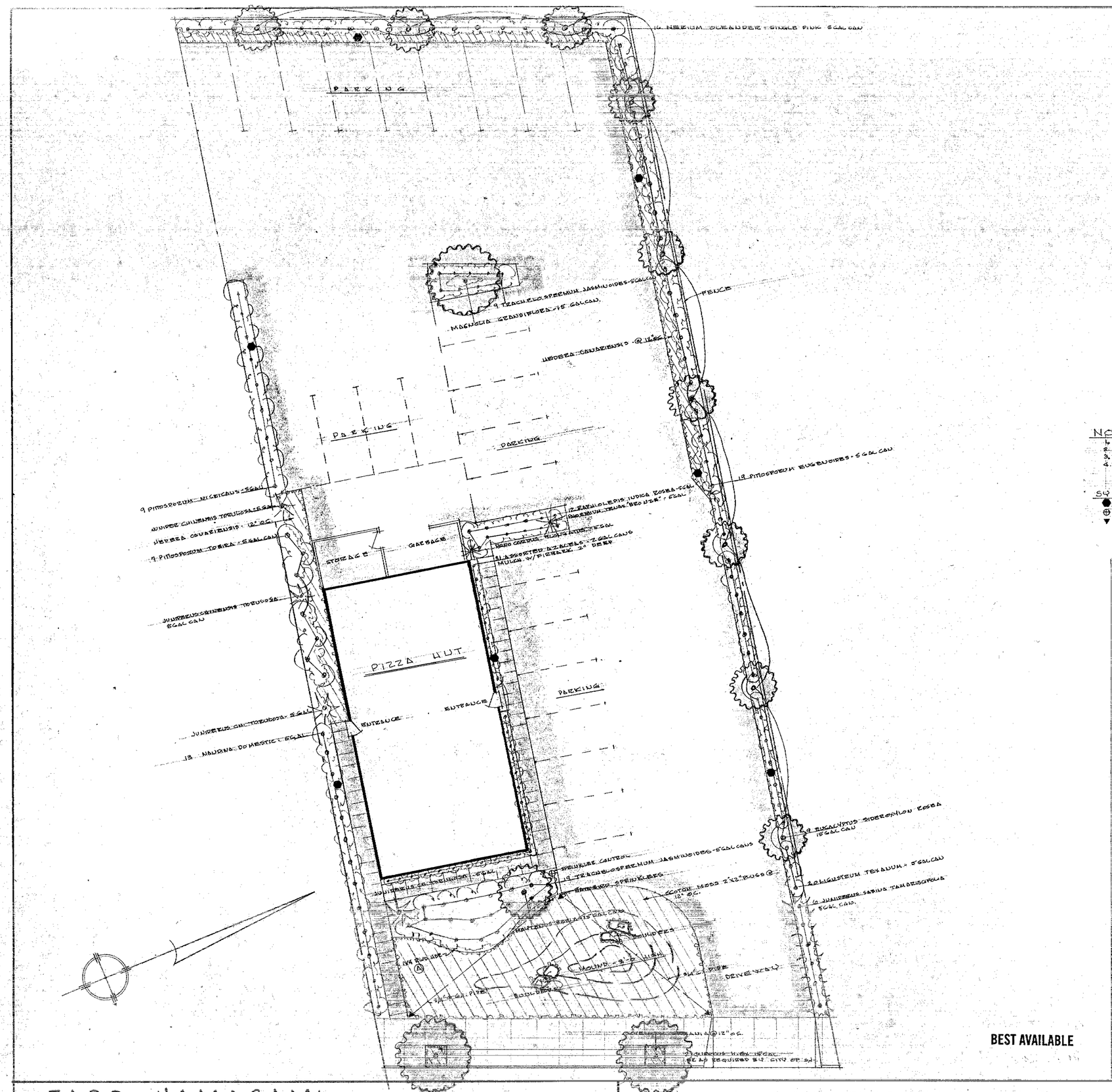

NOTES:
1. HOSE BIBS TO BE 00 3/4" GALVIB.
2. SPRINKLER CONTROL VALVES TO BE ANTI SIPHON VALVES.
3. USE SOLID PIPE SPRINKLERS.
4. SPRINKLERS TO BE ON 3/4" G.I. PIPE.

SYMBOLS:
- HOSE BIB.
- SPRINKLER CONTROL
- RAINBIRD SPRINKLER

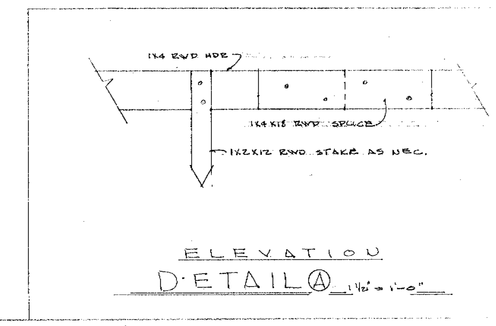

ELEVATION
DETAIL A 1½" = 1'-0"

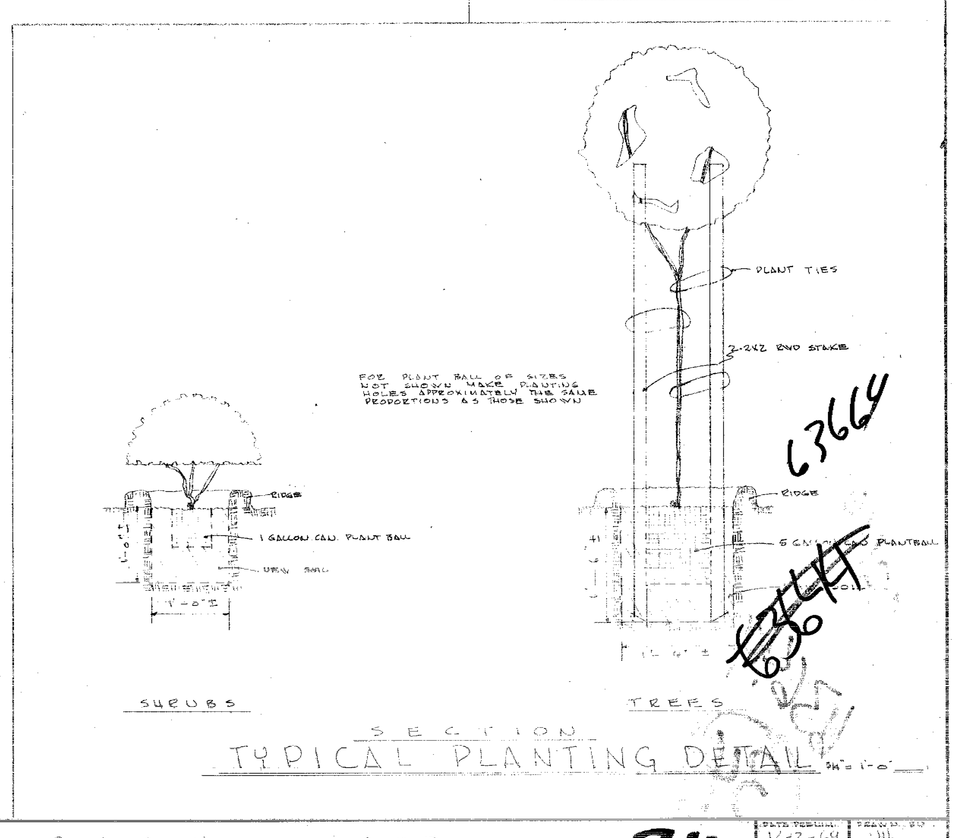

63664
636

TARO YAMAGAMI
1561 SARATOGA - SUNNYVALE ROAD
PHONE: 255-9565 OR 354-1980
A.I.L.A. LANDSCAPE ARCHITECT
SAN JOSE, CALIFORNIA

A LANDSCAPE PLAN FOR
PIZZA HUT INC.
SARATOGA AVENUE BETWEEN WILLIAMS RD. & DAVLER RD. SAN JOSE, CALIFORNIA.

34

DATE REQUIRED 1/22-69	DRAWN BY
DATE REVISION	CHECKED BY
DATE PRINT 12-2-69	APPROV. DRAWN 11-12-69
SCA NUMBER 6777-0	FILE NO.