City of San Jose - Building Division - Index Cover

Address 2770 ALUM ROCK AV

PLAN CHECK # _____ **PERMIT #** (B E) P M) 06036924

Prepared By UB **Page #** _____ **Date** 3/2/07

Category	Document Type	Sub Document Type
☐ MP Tracts	☐ TB Planning Permit	
	☐ PP Plot Plans	
	☐ TP Tract Plans	☐ PN Planning ☐ BD Building ☐ PB Plumbing ☐ MM Mechanical ☐ EE Electrical
	☐ TD Supporting Documents	
	☐ TC Structural Calculations	
	☐ TN Energy Calculations	
	☐ TS Soils Report	
	☐ TT Trusses/Shop Drawings	
	☐ TM Tract Map	☐ AR Addressed
☒ PL Plans	☐ PY Preliminary Plans	
	☒ EP Plans	☐ PA Planning ☒ BL Building ☐ BP Plumbing ☐ BM Mechanical ☐ BE Electrical
	☐ PM Parcel Map	
	☐ SC Structural Calculations	
	☐ EC Energy Calculations	
	☐ SD Supporting Documents	
	☐ SR Soils Report	
	☐ TR Trusses/Shop Drawing	
	☐ CR Copy Request	
☐ PT Permits	☐ AD Addressing	
	☐ IN Inspection Notices	☐ EP Expired
	☐ PR Permits & Applications	☐ CC Cash Receipts / Refunds ☐ CO C of O ☐ CP Correspondence ☐ EX Expired / Voided ☐ FI Finals ☐ IN Initial ☐ IS Initial – Supporting Doc's ☐ MR Meter Releases ☐ SI Special Inspection Reports
	☐ CF Compliance Files	☐ CN Compliance Notices ☐ RS Rescind ☐ SW Stop Work Orders
	☐ DR Damage Reports	☐ ED Earthquake Damage ☐ FD Flood Damage ☐ FA Fire/Auto Survey

Rev. 4/30/02

Taco Bell Remodel

2770 Alum Rock
San Jose, California

City of San José
Dept. of Planning, Building & Code Enforcement
Plan Conformance Review Approval
By: Bill Roth
Date: 1/9/07
Permit #: AD06-070

CITY OF SAN JOSE BUILDING DIVISION
APPROVED PLAN SET
ADDRESS 2770 Alum Rock
PERMIT NO. 06-036994
P.C. NO. 06-036072
CODE: D1
OCCUPANCY: A3
PLANS APPROVED BY: EXC
BUILDING: EXC
ELECTRICAL: EXC
PLUMBING
MECHANICAL
FIRE
OTHER
ZONING
COMMENTS
PLANNING PERMIT #

REQUIRED INSPECTIONS IN ADDITION TO BUILDING DIVISION INSPECTIONS
SPECIAL INSPECTION REQUIRED ( ) YES ( ) NO
SOILS ENGINEER INSPECTION REQ'D ( ) YES ( ) NO
COMPACTION REPORT REQ'D ( ) YES ( ) NO
FLOOD PLAIN/FLOODWAY CERT. REQ'D ( ) YES ( ) NO
PUBLIC WORKS INSPECTION REQ'D ( ) YES ( ) NO
FIRE DEPT INSPECTION REQ'D (X) YES ( ) NO
COMMENTS

A. INFORMATION CONTAINED IN THESE DOCUMENTS SHALL NOT BE CONSTRUED TO PERMIT WORK THAT DOES NOT CONFORM TO CODE.

B. THESE DRAWINGS SHOW THE DESIGN INTENT AS WELL AS SPECIFIC REQUIREMENTS OF THE INSTALLATION. THESE DRAWINGS DO NO INTEND TO SHOW EVERY ITEM REQUIRED TO CONSTRUCT THE WORK. CONTRACTOR AND/OR SUBCONTRACTORS SHALL PROVIDE A COMPLETE, FUNCTIONING INSTALLATION WHICH MEETS APPLICABLE CODES AND INDUSTRY STANDARDS FOR WORKMANSHIP.

C. THE GENERAL CONDITIONS OF THE CONTRACT FOR CONSTRUCTION (A.I.A. LATEST EDITION) ARE A PART OF THESE CONTRACT DOCUMENTS.

D. DUE TO THE NATURE OF THE WORK, ALL DIMENSIONS SHOWN SHALL BE CONSIDERED APPROXIMATE. CONTRACTOR SHALL FIELD VERIFY ALL DIMENSIONS PRIOR TO BEGINNING CONSTRUCTION. SHOP DRAWINGS SHALL BE SUBMITTED TO THE CONSTRUCTION MANAGER FOR REVIEW PRIOR TO FABRICATION OF ANY ITEM. FAILURE TO ADHERE TO THIS PROCEDURE SHALL PLACE FULL RESPONSIBILITY FOR ANY ERRORS DIRECTLY UPON THE CONTRACTOR.

E. INFORMATION CONCERNING EXISTING BUILDING STRUCTURE, SIZE, LOCATION OF EQUIPMENT, FINISHES, ETC. WAS OBTAINED FROM VARIOUS PLANS FOR CONSTRUCTION OF THE EXISTING BUILDING. EVERY EFFORT HAS BEEN MADE TO ACCURATELY DEPICT EXISTING CONDITIONS, HOWEVER ALL WORK MUST BE VERIFIED IN THE FIELD PRIOR TO CONSTRUCTION. ANY CONFLICT BETWEEN THESE PLANS AND ACTUAL FIELD CONDITIONS SHALL BE REPORTED IMMEDIATELY TO THE CONSTRUCTION MANAGER FOR VERIFICATION AND/OR CORRECTION.

F. DO NOT SCALE THESE DRAWINGS. VERIFY ALL DIMENSIONS AND CONDITIONS IN THE FIELD. ANY DISCREPANCIES IN THESE DRAWINGS SHALL BE BROUGHT TO THE ATTENTION OF THE CONSTRUCTION MANAGER PRIOR TO STARTING WORK.

G. ALL PROPOSED SUBSTITUTIONS SHALL BE APPROVED BY THE YUM BRANDS REMODEL DESIGN ARCHITECT, IN WRITING, PRIOR TO INSTALLATION.

H. THE GENERAL CONTRACTOR SHALL USE EXTREME CAUTION IN DEMOLITION OF EXISTING CONSTRUCTION. ANY ITEM STRUCTURAL IN NATURE AND SCHEDULED FOR DEMOLITION IN THIS DRAWING BUT NOT IDENTIFIED AS STRUCTURAL IN NATURE SHALL BE VERIFIED WITH THE STRUCTURAL ENGINEER PRIOR TO DEMOLITION. BY FAILURE TO DO SO, THE CONTRACTOR ASSUMES FULL RESPONSIBILITY FOR THE CONSEQUENCES OF SUCH ACTION.

I. G.C. IS RESPONSIBLE FOR SUBMITTAL, PAYING FEES AND OBTAINING ALL PERMITS ASSOCIATED WITH THE PROJECT EXCEPT GENERAL BUILDING PERMIT. THIS INCLUDES, BUT IS NOT LIMITED TO ELECTRICAL, MECHANICAL, PLUMBING, FIRE SPRINKLER, HOOD ANSUL, OR OTHER RELATED FIRE PERMITS, ENCROACHMENT PERMIT, ETC. OWNER WILL PAY FOR "CONNECTION FEES" ASSOCIATED WITH UTILITY PERMITS. G.C. REQUIRED TO PAY FOR TEMPORARY FACILITIES FEES AS REQUIRED TO COMPLETE THE WORK IN A TIMELY MANNER.

J. G.C. SHALL PROVIDE EACH SUBCONTRACTOR WITH A COMPLETE AGENCY-PERMITTED DRAWING SET AT TIME OF CONSTRUCTION.

K. IT IS THE G.C.'S RESPONSIBILITY TO CONFIRM THE AVAILABLE "RESIDUAL" WATER PRESSURE, PRIOR TO THE START OF ANY WORK, AND NOTIFY THE OWNER IF THE AVAILABLE PRESSURE IS NOT ADEQUATE TO SERVICE THE ANSUL SYSTEM OR OTHER PRESSURE SENSITIVE EQUIPMENT.

L. THE GENERAL CONTRACTOR SHALL REMOVE EXISTING TRIM AND SURFACES AS REQUIRED TO PROVIDE A PLUMB AND TRUE SURFACE SUITABLE FOR THE APPLICATION OF NEW WALL FINISHES.

M. ALL ABBREVIATIONS INCLUDED FOLLOW INDUSTRY STANDARDS. CONTACT CONSTRUCTION MANAGER IF ANY ABBREVIATIONS ARE NOT CLEAR.

N. THE CONTRACTOR SHALL SHORE AND/OR UNDERPIN EXISTING WORK AS REQUIRED TO SAFELY INSTALL NEW WORK. THIS WORK SHALL BE THE FULL RESPONSIBILITY OF THE CONTRACTOR AND NO ACT, DIRECTION OR REVIEW OF ANY SYSTEM OR METHOD BY THE ARCHITECT SHALL CHANGE OR AFFECT THE CONTRACTORS RESPONSIBILITY IN THIS MATTER. DEFLECTION OF EXISTING TO BE LIMITED TO 1/8" IN ORDER TO MAINTAIN INTEGRITY OF STRUCTURE.

O. IT IS UNKNOWN WHETHER HAZARDOUS MATERIALS WILL BE ENCOUNTERED IN THE WORK. IF MATERIALS SUSPECTED OF CONTAINING HAZARDOUS MATERIALS ARE ENCOUNTERED, DO NOT DISTURB; IMMEDIATELY NOTIFY CONSTRUCTION MANAGER AND OWNER. OWNER MAY REMOVE HAZARDOUS MATERIALS UNDER A SEPARATE CONTRACT.

PROJECT GENERAL NOTES

NAME	ROOM NAME
1 / 4 AX.X 2 / 3	SHEET NUMBER / ELEVATION NUMBER
8'-4"	CEILING HEIGHT
X / AX.X	BLDG. SECTION LETTER / BLDG. SECTION SHEET
X / AX.X	DETAIL NUMBER / DIRECTION OF DETAIL / DETAIL SHEET
X	REVISION NUMBER
0'-0" ELEV	BLDG. HEIGHT REFERENCE POINT
X / AX.X	ELEV. LETTER / ELEV. SHEET
X	DOOR NUMBER
X	WINDOW NUMBER / DECOR ITEM NUMBER
X	EXTERIOR WALL FINISH NUMBER
X	KEY NOTE
X-000	EQUIPMENT NUMBER
XX	ROOM FINISH NUMBER
X	INTERIOR ELEVATION DESIGNATION
X	SHEAR WALL TYPE (STRUCTURAL)
XXX 000	EQUIPMENT / FIXTURE NUMBER (M.E.P.)

REFER TO STRUCTURAL, MECHANICAL, PLUMBING AND ELECTRICAL SHEETS FOR SPECIFIC SYMBOLS

GENERAL DRAWING SYMBOLS

OWNER
(Name) TABELCO
(Address) 2780 ALUM ROCK
(City, State, Zip) SAN JOSE, CA
Operating Brand:

CONSTRUCTION MANAGER
(Name) THE FRAZIER GROUP
(Address) 5165 DREDGER WAY
(City, State, Zip) ORANGEVALE, CA 95662
Contact: WILL HARRIS
Phone: 916-988-8364

STRUCTURAL ENGINEER
(Name) MLA STRUCTURAL ENGINEERS
(Address) 5005 WINDPLAY DRIVE, SUITE 4
(City, State, Zip) EL DORADO HILLS, CA 95762
Contact: GREG LARNER
Phone: 916-941-2425

ARCHITECT
(Name) ANDERS & FALLTRICK ARCHITECTS
(Address) 1126 2nd STREET, SUITE 106
(City, State, Zip) SACRAMENTO, CA 95814
Contact: DAVE ANDERS
Phone: 916-442-3156

ELECTRICAL ENGINEER
(Name) CAPITOL CITY DESIGN
(Address) 1751 CEBRIAN STREET
(City, State, Zip) WEST SACRAMENTO, CA 95691
Contact: ANDY KURIMAY
Phone: 916-375-0135

PROJECT DIRECTORY

DESCRIPTION OF PROJECT:

This project involves the remodel of an existing Taco Bell restaurant. The exterior facade will be remodeled to architecturally emphasize the entry locations and include updated images of Taco Bell. A new parapet will replace the existing mansard roof around the building and existing stucco exterior will be refinished. New signage and awnings will be provided. Misc.. kitchen equipment will be added/replaced to back kitchen and will require minor modifications to M.E.P. The dining room will have an updated decor to accommodate approximately 50 seats. Site work includes upgrade of the drive-through service system, clearance bar, adding a bollard & verifying ft. candle of lot lighting.

OCCUPANCY: A3 / B

TYPE CONSTRUCTION: V-N

EXISTING BUILDING AREA AND OCCUPANT LOAD

TYPE	AREA	FACTOR	OCCUPANTS
DINING	1,170 S.F.	15	78
KITCHEN	1,106 S.F.	200	6
TOTAL	2,592 S.F.		84

PROJECT SUMMARY

APPLICABLE CODES INCLUDE, BUT ARE NOT LIMITED TO:
2001 CALIFORNIA BUILDING CODE (TITLE 24, PART 2)
2001 CALIFORNIA MECHANICAL CODE (TITLE 24, PART 4)
2001 CALIFORNIA PLUMBING CODE (TITLE 24, PART 5)
2004 CALIFORNIA ELECTRICAL CODE (TITLE 24, PART 3)
2001 CALIFORNIA FIRE CODE (TITLE 24, PART 9)
2005 CALIFORNIA ENERGY CODE
AMERICANS WITH DISABILITIES ACT

APPLICABLE CODES

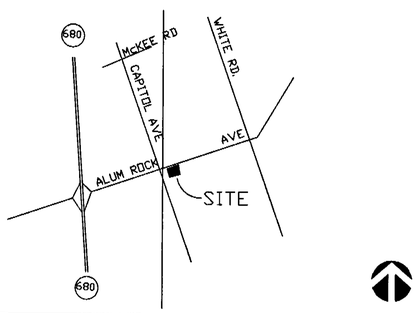

VICINITY MAP

TITLE

T1.0 TITLE SHEET

DEMOLITION
D1.0 DEMOLITION FLOOR PLAN & ELEVATIONS
D2.0 DEMOLITION REFLECTED CEILING PLAN & ROOF PLAN

STRUCTURAL
S1.1 TYPICAL NOTES
S1.2 TYPICAL DETAILS
S2.1 FOUNDATION PLAN
S2.2 ROOF FRAMING PLAN
S3.1 SECTIONS
S4.1 DETAILS

ARCHITECTURAL
A0.1 SITE PLAN & DETAILS
A0.2 SITE DETAILS
A1.0 FLOOR PLAN
A1.1 DOOR & WINDOW ELEVATIONS & SCHEDULES
A2.0 EQUIPMENT PLAN
A2.1 SEATING PLAN
A3.0 ROOF PLAN
A4.0 EXTERIOR ELEVATIONS
A6.0 EXTERIOR WALL SECTION
A6.1 TOWER PLANS & WALL SECTION
A6.2 TOWER PLANS & SECTIONS
A7.0 EXTERIOR DETAILS
A7.1 DETAILS
A8.0 FLOOR FINISH PLAN
A8.1 FINISH SCHEDULE
A9.0 REFLECTED CEILING PLAN
A10.0 INTERIOR ELEVATIONS - DINING ROOM
A10.1 INTERIOR ELEVATIONS - RESTROOMS
A11.0 INTERIOR CONSTRUCTION DETAILS

ELECTRICAL
E1.0 LEGEND, RISER DIAGRAM, PANEL SCHEDULE
E2.0 FLOOR PLAN - LIGHTING
E3.0 TITLE 24

A	B	C	D	E	F	G	H
A							
A							
A							
A							
A							

SHEET INDEX

THE FRAZIER GROUP
DESIGN & DEVELOPMENT SERVICES
5165 DREDGER WAY
ORANGEVALE, CALIFORNIA
95662 (916) 988-8364

LICENSED ARCHITECT
DAVID SCOTT ANDERS
No. C-20798
Exp. 2-28-07
STATE OF CALIFORNIA

TACO BELL REMODEL
2770 ALUM ROCK
SAN JOSE, CA

CONTRACT:	8-22-05
BUILDING STYLE:	
PLAN VERSION:	
SITE NO:	
TFG NO:	55004
WORK DT:	11-7-06
ISSUE DT:	

SHEET

TITLE SHEET

T1.0

PC06-034072

06-036994

S:\0604-TB Alum Rock_0604_T1.0.dwg Nov 13, 2006 - 11:19am

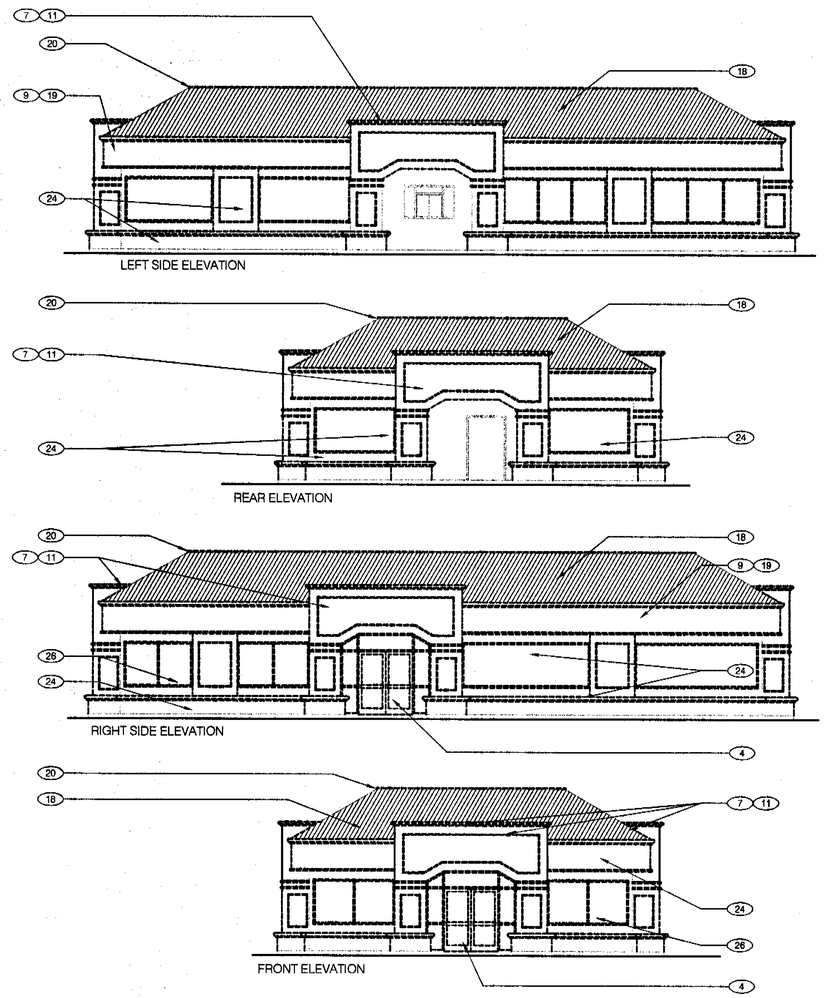

DEMOLITION ELEVATIONS 1/8"=1'-0" | C

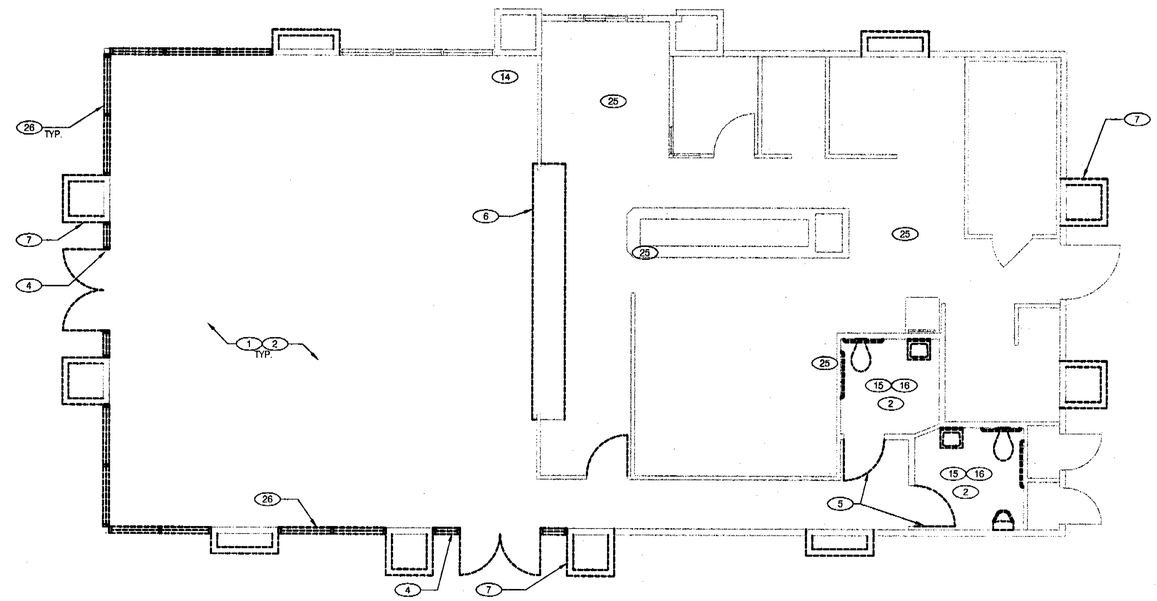

DEMOLITION FLOOR PLAN 3/16"=1'-0" | A

TYPICAL EXISTING EXTERIOR WALL: 2x6 WOOD STUDS @16" O.C. w/ 1/2" PLYWOOD (EXP 1) SHEATHING.

TYPICAL EXISTING INTERIOR WALL TO REMAIN: 2x4 WOOD STUDS @16" O.C. (U.N.O.)

DEMO ITEMS AS INDICATED (SEE KEY NOTES)

DEMOLITION LEGEND | F

A. TOWER FOOTING: FOR PROPER DOWEL EMBEDMENT MAINTAIN MINIMUM WIDTH OF 12" FOR NEW TOWER FOOTING. IF MINIMUM CANNOT BE SUSTAINED DEMOLISH EXISTING TOWER FOOTING AND POUR NEW. SEE DETAIL 9/A6.1

B. INSPECT INTERIOR AND EXTERIOR WALLS. REPLACE ANY DAMAGED SUBSTRATE WALLS ETC. VERIFY WITH OWNER.

C. ROOF RECOMMENDATIONS: INSPECTION OF EXISTING ROOF BY QUALIFIED ROOFER IS RECOMMENDED. REPLACE ROOF IF WARRANTED. VERIFY ALL ACTIONS WITH OWNER.

D. SEE D2.0 FOR DEMO CEILING AND DEMO ROOF PLANS.

E. SEE D2.0 FOR DEMOLITION SPECIFICATIONS.

F. SEE A0.1 FOR ANY SITE DEMO WORK.

DEMOLITION NOTES | D

1. REMOVE ALL DINING AREA SEATS, TABLES, TRASH ENCLOSURES, DIVIDER WALLS, PLANTS, QUEUING LINE & DRINK STATION
2. REMOVE ALL EXISTING TILE FLOORING & COVE BASE IN DINING AREA, CUSTOMER AREA, CORRIDOR, WOMENS' RESTROOM & MENS RESTROOM. PATCH AND REPAIR CONC SLAB AS REQUIRED.
3. REMOVE (E) ACOUSTIC CEILING GRID & TILES INCLUDING GYP. BD. SOFFITS AS SHOWN DASHED IN CUSTOMER AREA. SAVE EXISTING SPEAKERS, SECURITY EQUIPMENT & SMOKE DETECTORS FOR REINSTALLATION. SEE FLOOR PLAN.
4. REMOVE EXISTING STOREFRONT & DOOR OR WINDOW & FRAME.
5. REMOVE EXISTING BATHROOM DOORS. FRAME TO REMAIN (PROTECT.)
6. REMOVE EXISTING COUNTER AND LOW WALL
7. REMOVE EXISTING ENTRY ARCH/TOWER FACADE & WALLS INCLUDING TOWER FOOTING AS REQUIRED, SEE DEMO NOTE 'A'. REMOVE SIDEWALK TO NEAREST EXPANSION JOINT OR CURB. DO NOT SAWCUT OR PATCH CONCRETE.
8. MECHANICAL REGISTERS TO BE REMOVED. ADJUST DUCTWORK FOR NEW CEILING HEIGHTS.
9. REMOVE EXISTING CONTINUOUS EXTERIOR SOFFIT, FASCIA & LIGHTING. REMOVE EXISTING LIGHTING WIRING BACK TO SOURCE. SEE A/A6.0 FOR ADDITIONAL INFORMATION.
10. REMOVE EXISTING FLUORESCENT LIGHT FIXTURES WITHIN DINING ROOM, RESTROOMS AND IN CORRIDOR (DASHED)
11. REMOVE EXISTING CRICKET, TOWER ROOFING & SIGNAGE INCLUDING ASSOCIATED WIRING BACK TO SOURCE
12. REMOVE AND SAVE (E) SECURITY SYSTEM CAMERAS & EQUIPMENT FOR REINSTALLATION
13. EXISTING BUILT-UP ROOF TO REMAIN. PATCH AND REPAIR AS REQUIRED. SEE DEMO NOTE 'C'
14. DEMO EXISTING FLOOR AND WALL AS REQUIRED FOR NEW DRINK STATION. SEE SHEET A2.0 FOR EQUIPMENT PLAN AND SCHEDULE.
15. REMOVE EXISTING WALL TILE & SUBSTRATE IN BATHROOM.
16. REMOVE AND REPLACE EXISTING TOILETS, SINKS, URINAL & ACCESSORIES FOR INSTALLATION OF NEW TILE. SEE SHEET A10.1
17. ALL EXISTING ROOF TOP EQUIPMENT TO REMAIN, UNO
18. REMOVE EXISTING ROOF TILE. PLYWOOD TO REMAIN
19. REMOVE EXISTING TRUSS TAIL OVERHANG. SEE STRUCTURAL.
20. REMOVE FLASHING CAP. PARAPET TO REMAIN.
21. EXISTING ROOF HATCH
22. REMOVE EXISTING MENU BOARD AND SOFFIT.
23. NOT USED.
24. REMOVE ALL STUCCO. SEE KEY NOTE #16, A4.0.
25. SEE SHEET A2.0 FOR NEW KITCHEN EQUIPMENT PLAN AND SCHEDULE.
26. REMOVE ALL WINDOWS AND FRAMES.
27. EXISTING PRODUCTION LINE TO BE REMOVED / RELOCATED. SEE SHEET A2.0 FOR LOCATION.
28. REMOVE EXISTING DOOR AND FRAME INTO RESTROOM VESTIBULE.
29. EXISTING IN-COUNTER HAND SINK TO BE RELOCATED. SEE A2.0 AND P1.0 FOR ADDITIONAL INFORMATION.
30. EXISTING SHEAR/ BEARING WALL TO REMAIN
31. EXISTING PLANTER TO BE REMOVED
32. TOP OF (E) PARAPET TO REMAIN. SEE DETAIL 3 ON SHEET A6.2
33. CUT (E) PARAPET WALL DOWN TO 16'-9" AFF.
34. PAINT SKYLIGHT GLASS BLACK (PAINT SPEC TBD)

DEMOLITION KEY NOTES | B

THE FRAZIER GROUP
DESIGN & DEVELOPMENT SERVICES
5165 DREDGER WAY
ORANGEVALE, CALIFORNIA
95662 (916) 988-8364

LICENSED ARCHITECT
DAVID SCOTT ANDERSON
No. C-29718
Ren. 2-07
STATE OF CALIFORNIA

TACO BELL REMODEL
2770 ALUM ROCK
SAN JOSE, CA

CONTRACT:	8-22-05
BUILDING STYLE:	
PLAN VERSION:	
SITE NO:	
TFG NO:	55004
WORK DT:	11-7-06
ISSUE DT:	

TACO BELL

SHEET
DEMOLITION PLANS
D1.0

S:\0604-TB Alum Rock_0604_D1.0.dwg Nov 13, 2006 - 3:54pm

SECTION 02112

SELECTIVE DEMOLITION
PART 1 - GENERAL
1.1 SUMMARY
A. WORK INCLUDES SELECTIVE DEMOLITION AS INDICATED ON DRAWINGS AND TO THE EXTENT NECESSARY TO ACCOMMODATE NEW CONSTRUCTION.
B. UNLESS OTHERWISE INDICATED, DEMOLISHED MATERIALS BECOME CONTRACTOR'S PROPERTY.
C. COMPLY WITH EPA REGULATIONS AND DISPOSAL REGULATIONS OF AUTHORITIES HAVING JURISDICTION.
D. CONDUCT DEMOLITION WITHOUT DISRUPTING ADJACENT FACILITIES.
E. IT IS UNKNOWN WHETHER HAZARDOUS MATERIALS WILL BE ENCOUNTERED IN THE WORK. IF MATERIALS SUSPECTED OF CONTAINING HAZARDOUS MATERIALS ARE ENCOUNTERED, DO NOT DISTURB; IMMEDIATELY NOTIFY CONSTRUCTION MANAGER AND OWNER. OWNER WILL REMOVE HAZARDOUS MATERIALS UNDER A SEPARATE CONTRACT.

PART 2 - PRODUCTS (NOT APPLICABLE)

PART 3 - EXECUTION
3.1 DEMOLITION
A. MAINTAIN AND PROTECT EXISTING UTILITIES TO REMAIN IN SERVICE BEFORE PROCEEDING WITH DEMOLITION, PROVIDING BYPASS CONNECTIONS TO OTHER PARTS OF THE BUILDING.
B. LOCATE, IDENTIFY, SHUT OFF, DISCONNECT, AND CAP OFF UTILITY SERVICES TO BE DEMOLISHED.
C. EMPLOY A CERTIFIED, LICENSED EXTERMINATOR TO TREAT BUILDING AND TO CONTROL RODENTS AND VERMIN.
D. CONDUCT DEMOLITION OPERATIONS AND REMOVE DEBRIS TO PREVENT INJURY TO PEOPLE AND DAMAGE TO ADJACENT BUILDINGS AND SITE IMPROVEMENTS. EXPLOSIVES ARE NOT PERMITTED.
E. PROVIDE AND MAINTAIN SHORING, BRACING, OR STRUCTURAL SUPPORT TO PRESERVE BUILDING STABILITY AND PREVENT MOVEMENT, SETTLEMENT, OR COLLAPSE.
F. PROTECT BUILDING STRUCTURE OR INTERIOR FROM WEATHER, TEMPERATURE EXTREMES, WATER LEAKAGE AND DAMAGE. SECURE BUILDING FROM UNAUTHORIZED INTRUSION.
G. PROTECT REMAINING WALLS, CEILINGS, FLOORS, AND EXPOSED FINISHES. ERECT AND MAINTAIN DUST PROOF PARTITIONS. COVER AND PROTECT FIXTURES AND EQUIPMENT TO REMAIN.
H. PROMPTLY PATCH AND REPAIR HOLES AND DAMAGED SURFACES OF BUILDING CAUSED BY DEMOLITION. RESTORE EXPOSED FINISHES OF PATCHED AREAS AND EXTEND FINISH RESTORATION INTO REMAINING ADJOINING CONSTRUCTION.
I. PROMPTLY REMOVE DEMOLISHED MATERIALS FROM OWNER'S PROPERTY AND LEGALLY DISPOSE OF THEM. DO NOT BURN DEMOLISHED MATERIALS. DO NOT SELL ON SITE.

END OF SECTION

DEMOLITION SPECIFICATIONS F

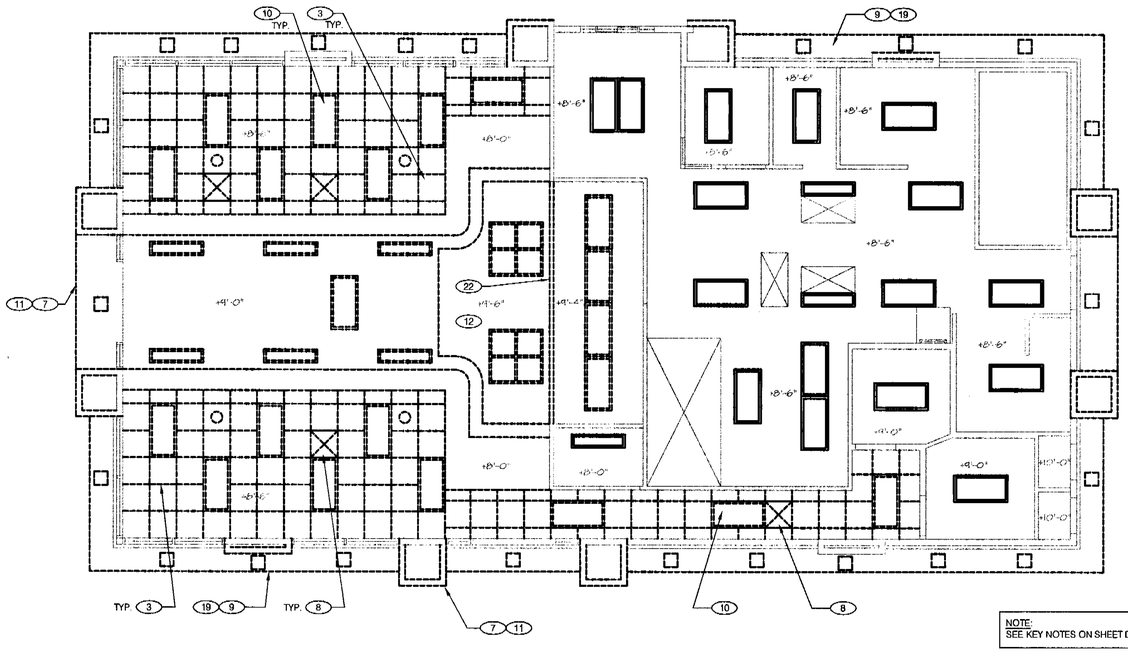

NOTE:
SEE KEY NOTES ON SHEET D1.0

DEMOLITION REFLECTED CEILING PLAN 3/16"=1'-0" | A

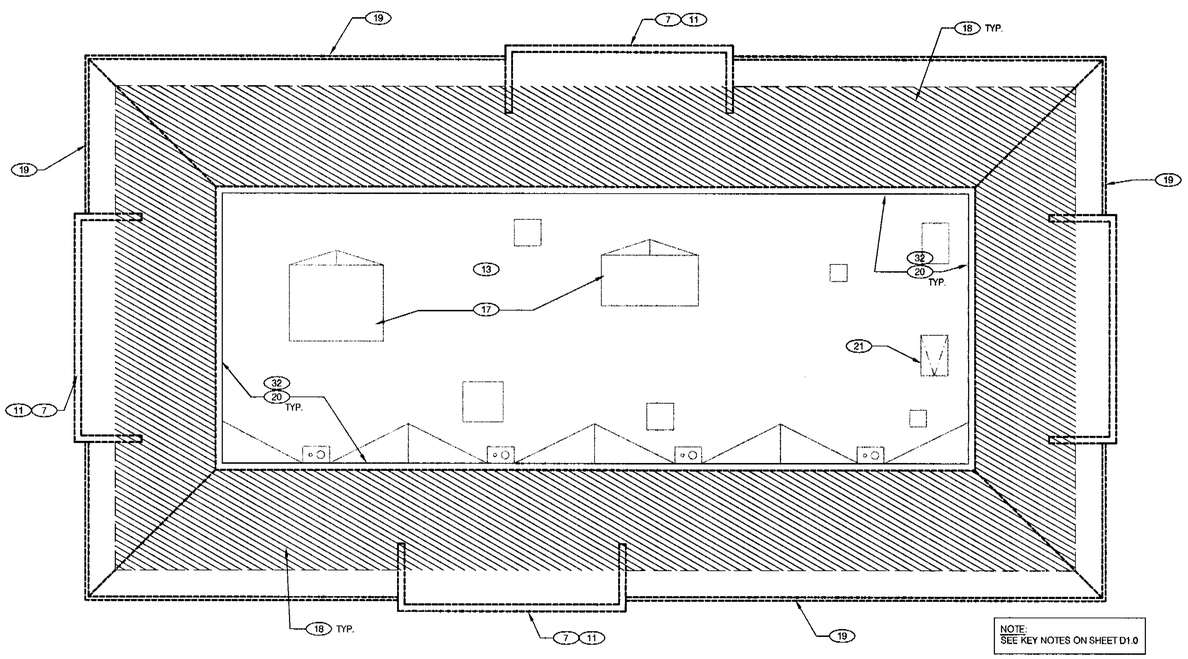

NOTE:
SEE KEY NOTES ON SHEET D1.0

DEMOLITION ROOF PLAN 3/16"=1'-0" | B

THE FRAZIER GROUP
DESIGN & DEVELOPMENT SERVICES
5165 DREDGER WAY
ORANGEVALE, CALIFORNIA
95662 (916) 988-8364

LICENSED ARCHITECT
DAVID SCOTT ANDERSON
No. C-29718
Reg. 2-07
STATE OF CALIFORNIA

TACO BELL REMODEL
2770 ALUM ROCK
SAN JOSE, CA

CONTRACT:	8-22-05
BUILDING STYLE:	
PLAN VERSION:	
SITE NO:	
TFG NO:	55004
WORK DT:	11-7-06
ISSUE DT:	

TACO BELL

SHEET
DEMOLITION PLANS
D2.0

S:\0604-TB Alum Rock_0604_D2.0.dwg Nov 13, 2006 - 9:22am

General Notes

1. Construction shall conform to all applicable codes and regulations.
2. Shop Drawing Note:
   A) Shop drawings shall be submitted in the form of three prints of each sheet, unless submittal to the Building Official requires additional sets.
   B) The purpose of shop drawings submittals by the Contractor is to demonstrate to the Structural Engineer that he understands the design concept by indicating which materials he intends to furnish and install, and by detailing the fabrication and installation methods he intends to use.
   C) Prior to fabrication, shop drawings shall be submitted for review to the Structural Engineer. Shop drawings submittals shall include, but are not necessarily limited to plated wood roof trusses, and glued laminated beams.
3. Safety Note:
   A) It is the Contractors responsibility to comply with the pertinent sections, as they apply to this project, of the "Construction Safety Orders" issued by the State of California latest edition, and all OSHA requirements.
   B) The owner and the Structural Engineer do not accept any responsibility for the Contractor's failure to comply with these requirements.
   C) The Contractor shall be responsible for adequate design and construction of all forms and shoring required.
4. The Contractor shall notify the Architect and Structural Engineer where a conflict or a discrepancy occurs between the structural drawings and any other portion of the contract documents or existing field conditions. Such notification shall be given in due time so as not to affect the construction schedule. In case of a conflict between structural drawings and specifications, the more restrictive condition shall take precedence unless written approval has been given for the least restrictive. Contractor shall verify all dimensions with architectural and structural drawings prior to commencing any work.
5. Where no specific detail is shown, the construction shall be identical or similar to that indicated for like cases of construction on this project. Should there be any question, contact the Architect and Structural Engineer prior to proceeding.
6. These drawings are not complete until reviewed and accepted by local building official and signed by the Structural Engineer.
7. All drawings and written material appearing herein constitutes the original and unpublished work of the Structural Engineer and the same may not be duplicated, used or disclosed without written consent of the Structural Engineer and compensation.
8. The structure shown on these drawings is structurally sound only in its completed form. The stability of this structure depends on the diaphragm and the bracing members shown. The Contractor is to provide for the design and construction of shoring for all earth, forms, concrete, steel, wood, and masonry to resist gravity, earth, wind, seismic, and construction loads. Shoring shall remain in place until all diaphragm and lateral resisting elements are in place in their entirety.

Abbreviations

addl ..... Additional
alt ..... Alternate
AISC ..... American Institute of Steel Construction
APA ..... American Plywood Association
ASTM ..... American Society for Testing and Materials
AWS ..... American Welding Society
AB ..... Anchor bolt
& ..... And
arch ..... Architect/Architectural
@ ..... At
bm ..... Beam
btwn ..... Between
blkg ..... Blocking
B.S. ..... Both sides
bott ..... Bottom
BN ..... Boundary nail
clg ..... Ceiling
cc ..... Center to center
℄ ..... Center line
clr ..... Clear
col ..... Column
CP ..... Complete Penetration
conc ..... Concrete
CMU ..... Concrete masonry unit
conn ..... Connection
CJ ..... Construction Joint
cont ..... Continuous
csk ..... Countersink
CTJ ..... Control Joint
DL ..... Dead Load
diag ..... Diagonal
dia ..... Diameter
do ..... Ditto
D.F. ..... Douglas Fir
dbl ..... Double
dwg ..... Drawings
ea ..... Each
E.F. ..... Each Face
embed ..... Embedment
EN ..... Edge Nail
E.W. ..... Each Way
elev, el ..... Elevation
eq ..... Equal
eq'lp ..... Equipment
(e) ..... Existing
E.J ..... Expansion Joint
FC ..... Face of concrete
FB ..... Face of block
FM ..... Face of masonry
FS ..... Face of Stud
F.F. ..... Finish floor
F.G. ..... Finish grade
flr ..... Floor
ftg ..... Footing
fnd ..... Foundation
frmg ..... Framing
galv ..... Galvanized
ga ..... Gauge
GLB ..... Glued-laminated beam
hgr ..... Hanger
hdr ..... Header
ht ..... Height
HSB ..... High strength bolt
HSS ..... Hollow structural section
horiz ..... Horizontal
int ..... Interior
jst ..... Joist
jh ..... Joist hanger
lt. wt. ..... Light weight
LL ..... Live Load
L.L.H. ..... Long leg horizontal
L.L.V. ..... Long leg vertical
LVL ..... Laminated veneer lumber
MB ..... Machine bolt
mfr ..... Manufacturer
max ..... Maximum
mech ..... Mechanical
min ..... Minimum
misc ..... Miscellaneous
mtl. ..... Metal
(N) ..... New
nts ..... Not to scale
..... Number or pounds
oc ..... On center
OWJ ..... Open web girder
OWJ ..... Open web joist
O.H. ..... Opposite Hand
o.d. ..... Outside diameter
PP ..... Partial penetration
PL ..... Plate
pcf ..... Pounds per cubic foot
psf ..... Pounds per square foot
psi ..... Pounds per square inch
PAF ..... Powder actuated fasteners
PSL ..... Parallel strand lumber
PTDF ..... Pressure treated douglas fir
r, rad ..... Radius
RDWD ..... Redwood
reinf ..... Reinforcing
req'd ..... Required
R.O. ..... Rough opening
Φ ..... Round or diameter
sched ..... Schedule
SDS/TS ..... Self drilling self tapping screw
shtg ..... Sheathing
SMS ..... Sheet metal screw
slm ..... Similar
□ ..... square
stagg ..... Staggered
std ..... Standard
stl ..... Steel
stfnr ..... Stiffener
struct ..... Structural
symm ..... Symmetrical
TN ..... Toe nail
t&b ..... Top & bottom
t.o.c. ..... Top of concrete
t.o.f. ..... Top of framing
t.o.℄ ..... Top of plate
t.o.s. ..... Top of Steel
t.o.w. ..... Top of Wall
t&g ..... Tongue & Groove
TS ..... Tube Steel
typ ..... Typical
u.n.o. ..... Unless noted otherwise
vert ..... Vertical
w/ ..... With
w/n ..... Within
w/o ..... Without
WS ..... Wood screw
W.P. ..... Working point
WWF ..... Welded wire fabric
WCLIB ..... West Coast Lumber Inspection Bureau

Concrete

1. Structural concrete shall attain 28 day compressive strength as required in note #16.
2. Concrete mix design and testing shall meet the requirements of CBC/IBC Sections 1903, 1904, and 1905. Submit mix designs for review prior to concrete placement.
3. Concrete shall be mixed, placed, and cured in accordance with ACI 318, latest edition, and project specifications.
4. Cement shall conform to ASTM C-150 type I or II.
5. Concrete aggregates shall conform to ASTM C-33. Aggregates for lightweight concrete shall conform to ASTM C-330.
6. Construction joints shall be made rough and all laitance removed from the surface. Concrete may be roughened by chipping the entire surface, sand blasting or raking the surface to produce ¼" deep deformations.
7. Remove all debris from forms before casting any concrete.
8. Reinforcing, dowels, bolts, anchors, sleeves, etc., to be embedded in concrete shall be tied securely in position before placing concrete.
9. Concrete shall not be dropped through reinforcing steel (as in walls) so as to cause segregation of aggregates. In such cases, hoppers and vertical chutes or trunks shall be used such that the free unconfined fall of concrete does not exceed six feet.
10. Consolidate concrete placed in forms by mechanical vibrating equipment supplemented by hand-spading, rodding or tamping. Use equipment and procedures for consolidation of concrete in accordance with the recommended practices of ACI 304 to suit the type of concrete and project conditions.
11. No wood spreaders allowed. No wood stakes allowed in areas to be concreted.
12. All saw cutting of construction joints shall be done after initial set has occurred to avoid tearing or damage by the saw blade, but before initial shrinkage has occurred.
13. Additional reinforcing in precast or tilt-up panels required for lifting stresses shall be supplied by the Contractor at no additional cost to the Owner.
14. Provide 2-#4x4'-0" diagonal reinforcing at mid-depth of slab at all reentrant corners typical.
15. See Architectural Drawings for wall openings, wall offsets, chamfers, kerfs, drips, etc.
16. Concrete shall have a maximum slump of 4" and, shall conform to the following:

Class	Item	f'c @ 28 days	Max Aggregate Size	Weight	Max W/C Ratio
A.	Conc.-Gen'l Use	2500 psi	1"	145	0.55

Reinforcing Steel

1. Reinforcing steel shall conform to ASTM A615- grade 60 for #4 and larger, and ASTM A615-grade 40 for #3 and smaller, except reinforcing steel to be welded shall conform to ASTM A706.
2. All preheating and welding of reinforcing bars shall be done in accordance with AWS D1.4 latest edition and shall be continuously inspected by a qualified laboratory. Contractor shall furnish to the laboratory, rebar mill certificates.
3. Reinforcing steel shall be fabricated in accordance with the ACI "Manual of Standard Practice for Reinforced Concrete Construction", latest edition.
4. Wire fabric shall conform to ASTM A-185 and shall be lapped 12" minimum at splices.
5. Reinforcing steel shall be kept clean and free of rust.
6. Shop drawings for reinforcing steel shall be submitted for review prior to fabrication and delivery of reinforcing steel.
7. Provide all accessories necessary to support and secure reinforcing steel in the positions shown on the plans. All reinforcing steel shall be tied securely in position prior to placing concrete.
8. The following minimum concrete cover shall be provided for reinforcing steel:
   a.) For concrete cast against earth.....3"
   b.) For concrete exposed to earth or weather:
   #5 and smaller bars.....1½"
   #6 and larger bars.....2"
   #8 and smaller bars in tilt-up panels.....1"
   c.) For concrete not exposed to earth or weather.....1½"
12. Splices in reinforcing steel shall be Class B unless noted otherwise and shall conform to the following schedule:

Lap Splice Length Schedule

Splice Class	Reinforcing Location	#3	#4	#5	#6	#7	#8	#9	#10	#11
B	Top Bars	28"	38"	47"	56"	81"	93"	105"	118"	131"
B	Other Bars	22"	29"	36"	43"	63"	72"	81"	91"	101"

Notes:
a.) Schedule applies to uncoated, Grade 60 reinforcing steel, and normal weight, 3000 psi concrete.
b.) Top bars are located such that 12" or more of fresh concrete is cast below the splice.
c.) For light weight concrete, multiply lap lengths by 1.30.
d.) Schedule applies to bars with a clear spacing of not less than 2 bar diameters and, concrete cover of not less than 1 bar diameter.

Design Criteria

1. Codes and Standards:
   2001 California Building Code
2. Vertical Loads:
   Roof Live Load = 20 psf (reducible)
3. Lateral Loads:
   a.) Seismic:
   Zone 4, Z=0.4
   b.) Wind:
   80 mph, exposure B
4. Soils Values:
   Allowable soil pressures:
   a.) DL+LL= 2000 psf (per as-built drawings)

Powder Actuated Fasteners (PAF)

1. These notes govern all conditions called out on the plans as 'PAF' unless specifically noted otherwise.
2. All PAF shall be as manufactured by Hilti Incorporated. Reference shall be made to the 1999 'Product Technical Guide' for additional information.
3. PAF driven into steel base material shall be X-DNI type with P8 washers unless noted otherwise in the drawings. Length of fastener shaft shall be as required to penetrate through the steel base material. Minimum edge distance to any connected part shall be ½" and minimum fastener spacing shall be 2".
4. PAF driven into concrete base material shall be X-DNI type with P8 washers unless noted otherwise in the drawings. Length of fastener shaft shall be as required to penetrate 1½" into the concrete base material. Minimum edge distance to any concrete material shall be 2" and minimum fastener spacing shall be 4".
5. PAF driven into concrete base material through metal deck shall be X-DNI type with P8 washers. Length of fastener shaft shall be as required to penetrate 1" into the concrete through the low flute. Fastener shall be centered in the low flute and minimum fastener spacing shall be 4".
6. Where steel washers are indicated on the drawings, fasteners shall be X-DNI or X-ZF with premounted steel washers with a minimum diameter of 15mm.
7. Installation of fasteners shall be in accordance with manufacturer's recommendations and ICBO report no. 2388.

Structural Special Inspections

1. Special Inspections shall be provided as required below and shall conform to the requirements of 1997 UBC, Chapter 17.
2. All Special Inspections shall be performed by an independent inspection agency. Jobsite visits by the Structural Engineer do not constitute Special Inspections and are not a substitute for Special Inspections.
3. It is the contractors sole responsibility to see that these Special Inspections are performed.
4. Listed below are only those Special Inspections required for structural systems. Refer to UBC Chapter 17, the architectural drawings and/or specifications, and local building codes for other Special Inspections that may be required.
5. Special Inspections:

Special Inspections	Continuous	Periodic	Not Applicable	Notes
Concrete	☐	☐	☒	
Bolts Installed in Concrete	☐	☐	☒	
Special Moment-Resisting Concrete Frames	☐	☐	☒	
Reinforcing Steel and Prestressing Steel Tendons	☐	☐	☒	
Structural Welding	☐	☐	☒	
Special Moment-Resisting Steel Frames	☐	☐	☒	
Welding of Reinforcing Steel	☐	☐	☒	
High Strength Bolting	☐	☐	☒	
Structural Masonry	☐	☐	☒	
Piling, Drilled Piers, and Caissons	☐	☐	☒	
Special Grading, Excavation, and Filling	☐	☐	☒	
Expansion and Epoxy (adhesive) Anchors	☐	☒	☐	

Demolition Notes

1. Safety Notes:
   A) It is the Contractor's responsibility to comply with the pertinent sections as they apply to this project of the "Construction Safety Orders" issued by the State of California latest edition and all OSHA requirements.
   B) The Structural Engineer and Owner do not accept any responsibility for the Contractor's failure to comply with these requirements.
2. Shore or brace trusses, beams columns, floors, and walls as required to maintain the stable integrity of the existing structure prior to demolition. It is the Contractor's sole responsibility to design and provide competent shoring and bracing for all loads imposed during and after demolition through completion of new construction.
3. All dimensions given to and of the existing structure are approximate. Verify by field measurements the dimensions of the existing structure. Where actual conditions deviate from the details shown on the drawings, notify the Structural Engineer for instructions prior to proceeding with work.
4. Demolition and removal of existing construction shall be made in such a manner as to avoid or minimize damage to adjacent construction.
5. Extent of demolition is to be as indicated on plans, sections and details. Demolition is to include removal and disposal construction.

Wood

1. Sawn lumber shall conform to the following minimum specifications unless noted otherwise:

Member	Species	Grade
2x joists, rafters, and sub-purlins	Douglas Fir-Larch	No. 2
2x and 3x studs, plates, and blocking	Douglas Fir-Larch	No. 2
4x and 6x posts	Douglas Fir-Larch	No. 1
4x and 6x beams, purlins, and headers	Douglas Fir-Larch	No. 1

2. Glued Laminated Beams shall conform to the Design Standard Specifications for Structural Glued Laminated Timber for Softwood Species, AITC 117, latest edition and shall be manufactured in accordance with American National Standard ANSI/AITC A190.1 (Structural Glued Laminated Timber). Glued laminated beams shall be combination 24F-V4 for simple span members and 24F-V8 for cantilevered members. All glued laminated beams shall be manufactured with a 2000 ft. radius camber (except cantilevers shall have no camber) unless noted otherwise. Each glued-laminated beam shall be fabricated with exterior glue and shall be assumed to be for exterior use.
3. Pressure treated wood shall conform to Standard Specifications C1, C2, C3, C4, C9, C14, C15, C16, C22, C23, C24, C28 and M4, AWPA.
4. Wood Structural Panel Sheathing shall conform to UBC Standard 23-2 or UBC Standard 23-3.
5. All wood in direct contact with concrete or masonry shall be pressure treated.
6. Bearing and shear walls shall have double top plates, lapped at wall and partition intersection with 3-16d nails. Splice double top plates as noted or detailed on the drawings.
7. Provide solid blocking between joists and rafters at all supports.
8. Provide blocking at all ceiling levels.
9. Joists under and parallel to partitions shall be doubled and nailed together.
10. Holes for bolts in wood shall be bored with a bit equal in size to the diameter of the bolt plus 1/16 inch.
11. Holes for lag screws shall be bored as follows:
    a.) The clearance hole for the shank shall have the same diameter as the shank, and the same depth of penetration as the length of unthreaded shank.
    b.) The lead hole for the threaded portion shall have a diameter equal to 60% to 75% of the shank diameter and a length equal to at least the length of the threaded portion.
    c.) Lag screws and wood screws shall be screwed and not driven into place. Soap may be used to lubricate the screws.
12. All bolts and lag screws shall be provided with metal washers under heads and nuts which bear on wood. Applies also to inserted expanding fasteners, Red Head, etc.
13. All bolts and lag screws shall be tightened on installation and retightened before closing in or at completion of job.
14. Lay all structural sheathing panels on roofs and floors with face grain perpendicular to supports unless noted otherwise.
15. Use plyclips at midspan of all unsupported roof sheathing edges.
16. Connector hardware model number are those for Simpson Strong-Tie Company. Equivalent connectors with ICBO Evaluation Report may be substituted. All joist hangers shall be Simpson U series unless noted otherwise.
17. Nails shall have the following minimum dimensions (measured before application of any protective coatings):

Nail	Diameter	Length
16d common	0.162"	3½"
10d common	0.148"	3"
8d common	0.131"	2½"
16d sinker	.0148"	3¼"
10d box	0.128"	3"
8d box	0.113"	2½"

18. Anchor bolts for foundation sill plates shall be ⅝" diameter with 7" minimum embedment into concrete. Anchor bolts shall conform to ASTM A307 with a standard hex head at the embedded end or, shall conform to ASTM A36 with a fully[3] engaged hex nut on the embedded end. Anchor bolts shall be spaced at 48"cc unless noted otherwise. Provide at least two anchor bolts per each piece of foundation sill plate and, provide an anchor bolt not more than 12" nor less than 5" from the ends of each piece of foundation sill plate. All anchor bolts shall be provided with 2"x2"x⅜" plate washers.

Structural Composite Lumber

1. Parallel Strand Lumber, Parallam PSL
   a.) Parallel Strand Lumber specified on these drawings is manufactured by Trus Joist MacMillan, ICBO ES Report ER-4479. Alternate products with current ICBO Reports may be used provided their allowable design stresses meet or exceed those specified below.
   b.) 2.0E Parallam PSL Beams, Headers, and Girders
   Allowable design stresses (for loads of normal duration).
   Shear modulus of elasticity $G = 125{,}000$ psi
   Modulus of elasticity $E = 2.0 \times 10^6$ psi
   Flexural Stress $F_b = 2400$ psi
   Compression perpendicular to grain $F_{cL} = 750$ psi
   Compression parallel to grain $F_{cg} = 2400$ psi
   Horizontal shear $F_v = 290$ psi
   c.) 1.8E Parallam PSL Posts and Columns
   Allowable design stresses (for loads of normal duration).
   Shear modulus of elasticity $G = 125{,}000$ psi
   Modulus of elasticity $E = 1.8 \times 10^6$ psi
   Flexural Stress $F_b = 2500$ psi
   Compression perpendicular to grain $F_{cL} = 600$ psi
   Compression parallel to grain $F_{cg} = 2500$ psi
   Horizontal shear $F_v = 230$ psi
2. Laminated Veneer Lumber, 1.9E Microllam LVL
   a.) Laminated Veneer Lumber specified on these drawings is manufactured by Trus Joist MacMillan, ICBO ES Report ER-4479. Alternate products with current ICBO Reports may be used provided their allowable design stresses meet or exceed those specified below.
   b.) 1.9E Microllam LVL allowable design stresses (for loads of normal duration):
   Shear modulus of elasticity $G = 118{,}750$ psi
   Modulus of elasticity $E = 1.9 \times 10^6$ psi
   Flexural Stress $F_b = 2600$ psi
   Compression perpendicular to grain $F_{cL} = 750$ psi
   Compression parallel to grain $F_{cg} = 2310$ psi
   Horizontal shear $F_v = 285$ psi
3. Laminated Strand Lumber, 1.7E Timberstrand LSL
   a.) Laminated Strand Lumber specified on these drawings is manufactured by Trus Joist MacMillan, ICBO ES Report ER-4479. Alternate products with current ICBO Reports may be used provided their allowable design stresses meet or exceed those specified below.
   b.) 1.7E Timberstrand LSL allowable design stresses (for loads of normal duration):
   Shear modulus of elasticity $G = 106{,}250$ psi
   Modulus of elasticity $E = 1.7 \times 10^6$ psi
   Flexural Stress $F_b = 2600$ psi
   Compression perpendicular to grain $F_{cL} = 880$ psi
   Compression parallel to grain $F_{cg} = 2390$ psi
   Horizontal shear $F_v = 400$ psi
   c.) All Timberstrand stud walls to have full-width blocking installed at a maximum vertical spacing of 8'-0" and shall be sheathed with wood structural panel sheathing on the exterior face.
   d.) All Timberstrand studs shall be full-height, single length pieces with no splices.

REGISTERED PROFESSIONAL ENGINEER
JOHN M. MANDSAGER
No.3824
Exp.09/30/08
STRUCTURAL
STATE OF CALIFORNIA

THE FRAZIER GROUP
DESIGN & DEVELOPMENT SERVICES
5165 DREDCER WAY
ORANGEVALE, CALIFORNIA
95662 (916) 988-8364

ANDERS & FALLTRICK ARCHITECTS
1126 2nd STREET, SUITE 106
SACRAMENTO, CALIFORNIA 95814
TELEPHONE 916.442.3156
FACSIMILE 916.914.2427

MLA
STRUCTURAL ENGINEERS INC
5005 Windplay Drive, Suite 4
El Dorado Hills, CA 95762
phone: (916) 941-2425
fax: (916) 941-2429

TACO BELL REMODEL
2770 ALUM ROCK
SAN JOSE, CA

CONTRACT:	8-22-05
BUILDING STYLE:	
PLAN VERSION:	
SITE NO:	
TFG NO:	55004
WORK DT:	9-20-05
ISSUE DT:	

TACO BELL

SHEET
TYPICAL NOTES
S1.1

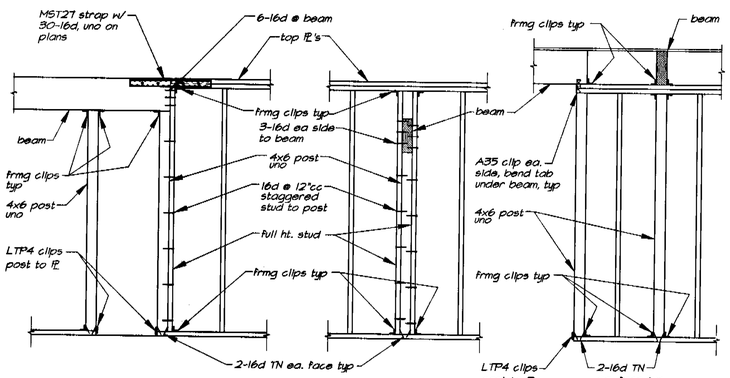

Beam Parallel to Wall

Beam Perpendicular to Wall

Condition @ Flush Beams

Note: Framing clips to be A34 @ 2x4 walls and A35 @ 2x6 walls, typical uno.

5 / S1.2 Post & Beam Connections ½"=1'-0"

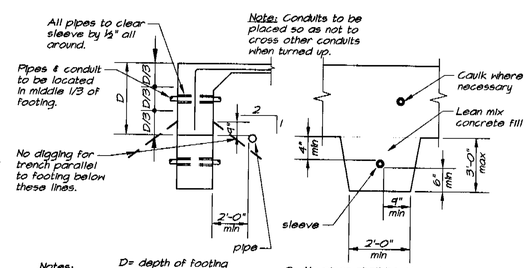

Notes:

D= depth of footing

1. Lean mix concrete fill to be placed before footing is cast. Make same width as footing and full width of pipe trench. Step footing if pipe is more than 2'-6" below bottom of footing.
2. No pipes shall be placed below spread footing, typ.
3. If pipe is in place prior to casting concrete, wrap pipe w/ glass wool insulation (1" min all around) in lieu of sleeve.

6 / S1.2 Pipes & Conduits at Footings ⅜"=1'-0"

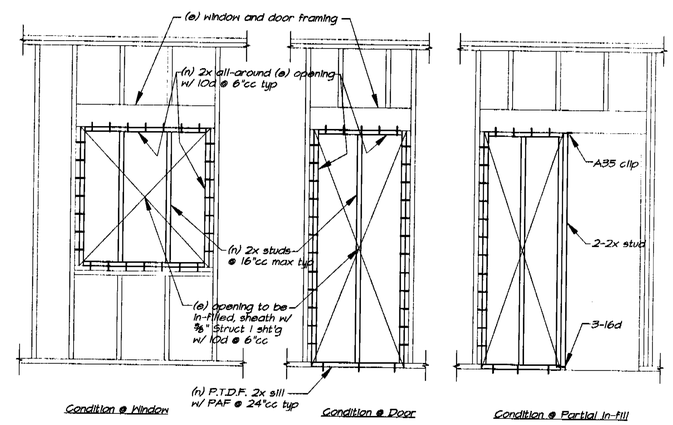

Condition @ Window

Condition @ Door

Condition @ Partial In-fill

Detail 7 / S1.2 ½"=1'-0"

Typical Wall In-fill Detail

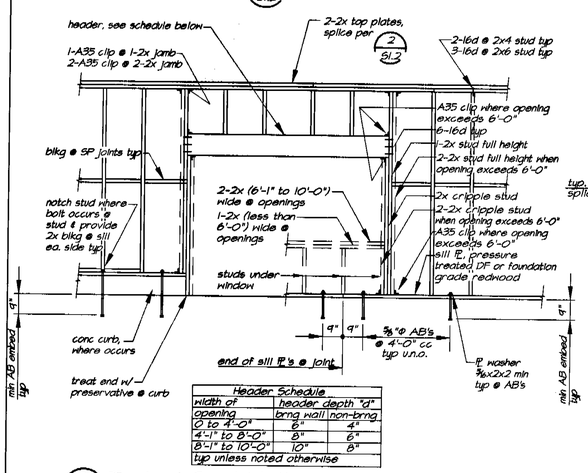

Header Schedule		
width of opening	header depth "d"	
	bmg wall	non-bmg
0 to 4'-0"	6"	4"
4'-1" to 8'-0"	8"	6"
8'-1" to 10'-0"	10"	8"

typ unless noted otherwise

1 / S1.2 Typical Stud Wall & Opening Framing ⅜"=1'-0"

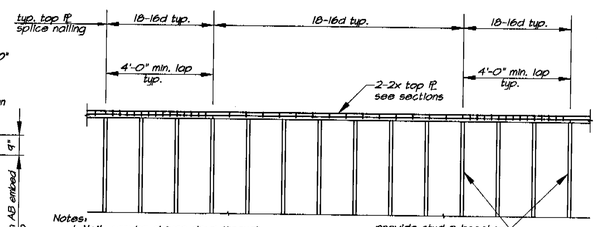

Notes:

1. Nails can be driven down through the top ℙ or up through the bottom ℙ.
2. Stagger nails typ.
3. At 4'-0" laps, use 2 rows of nails staggered and evenly spaced.

2 / S1.2 Typical Top Plate Splice Nailing ¼"=1'-0"

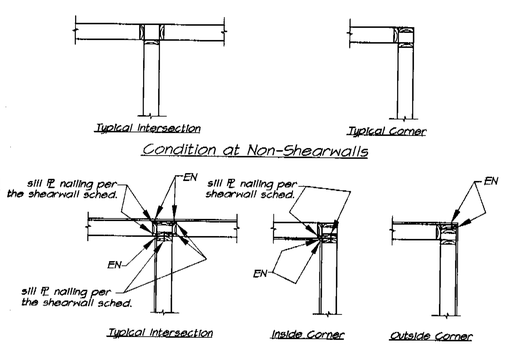

3 / S1.2 Typical Stud Framing at Corners ⅜"=1'-0"

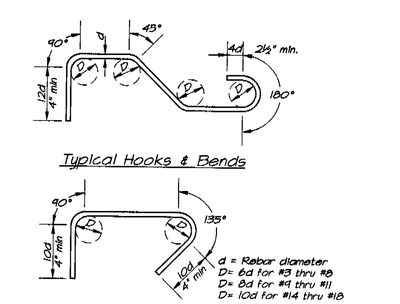

4 / S1.2 Rebar Hooks & Bends ⅜"=1'-0"

REGISTERED PROFESSIONAL ENGINEER
JOHN M. MANDSAGER
No.3824
Exp.09/30/08
STRUCTURAL
STATE OF CALIFORNIA

THE FRAZIER GROUP
DESIGN & DEVELOPMENT SERVICES
5165 DREDGER WAY
ORANGEVALE, CALIFORNIA
95662 (916) 988-8364

ANDERS & FALLTRICK ARCHITECTS
1126 2nd STREET, SUITE 106
SACRAMENTO, CALIFORNIA 95814
TELEPHONE 916.442.7156
FACSIMILE 916.914.2427

MLA STRUCTURAL ENGINEERS INC.
5005 Windplay Drive, Suite 4
El Dorado Hills, CA 95762
phone: (916) 941-2425
fax: (916) 941-2429

TACO BELL REMODEL
2770 ALUM ROCK
SAN JOSE, CA

CONTRACT:	8-22-05
BUILDING STYLE:	
PLAN VERSION:	
SITE NO:	
TFC NO:	55004
WORK DT:	9-20-05
ISSUE DT:	

TACO BELL

SHEET

TYPICAL DETAILS

S1.2

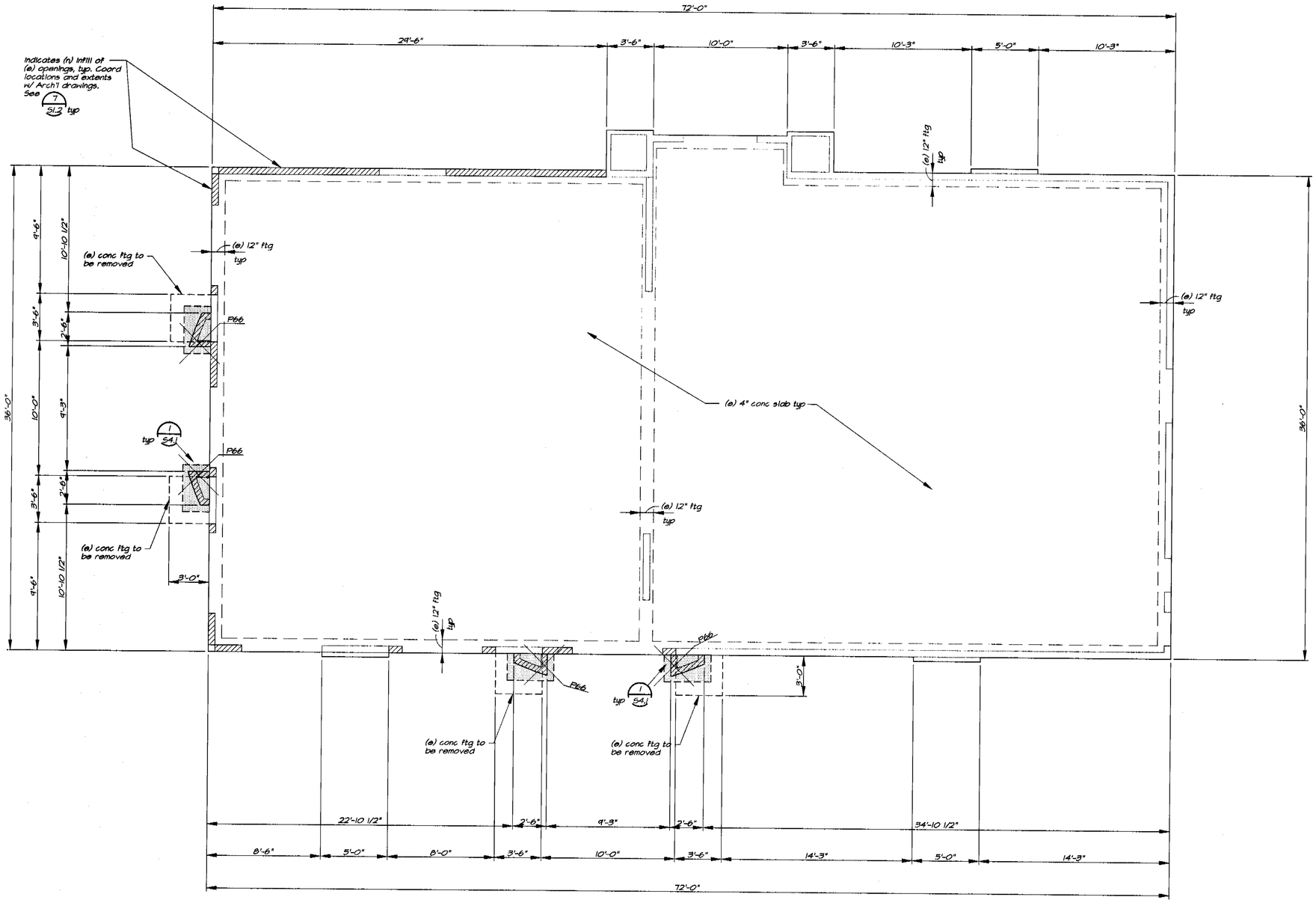

Foundation Plan 1/4"=1'-0"

Foundation Plan Notes:

1. Coordinate all dimensions with architectural drawings. Notify Architect of any discrepancies for resolution prior to proceeding.
2. See sheet S1.1, S1.2, and for typical notes and details. These notes and details apply to all construction unless noted or detailed otherwise.
3. Posts and columns:
   - A.) Indicates wood posts typical uno. See plan for sizes.
   - B.) Unless noted otherwise, support all beams on 4x6 posts.
   - C.) Wood Post Schedule:

Mark	Post Size
P224	2-2x4
P226	2-2x6
P44	4x4

Mark	Post Size
P46	4x6
P48	4x8
P66	6x6

   - D.) Posts shall be of lumber grades as specified on sheet S1.1 unless noted otherwise on the plans or in the schedule above.
4. All bolts, straps and other hardware embedded in concrete must be in place prior to foundation inspection.
5. shading indicates (n) concrete footings, typ.
6. shading indicates (n) wood-framed walls, typ. Coordinate locations and extents with Architectural drawings.

REGISTERED PROFESSIONAL ENGINEER
JOHN M. MANDSAGER
No.3824
Exp.09/30/08
STRUCTURAL
STATE OF CALIFORNIA

THE FRAZIER GROUP
DESIGN & DEVELOPMENT SERVICES
5165 DREDGER WAY
ORANGEVALE, CALIFORNIA
95662 (916) 988-8364

ANDERS & FALLTRICK ARCHITECTS
1126 2nd STREET, SUITE 108
SACRAMENTO, CALIFORNIA 95814
TELEPHONE 916.442.3156
FACSIMILE 916.914.2427

MLA STRUCTURAL ENGINEERS INC
5005 Windplay Drive, Suite 4
El Dorado Hills, CA 95762
phone: (916) 941-2425
fax: (916) 941-2429

TACO BELL REMODEL
2770 ALUM ROCK
SAN JOSE, CA

CONTRACT:	8-22-05
BUILDING STYLE:	
PLAN VERSION:	
SITE NO:	
TFG NO:	55004
WORK DT:	9-20-05
ISSUE DT:	

TACO BELL

SHEET
FOUNDATION PLAN
S2.1

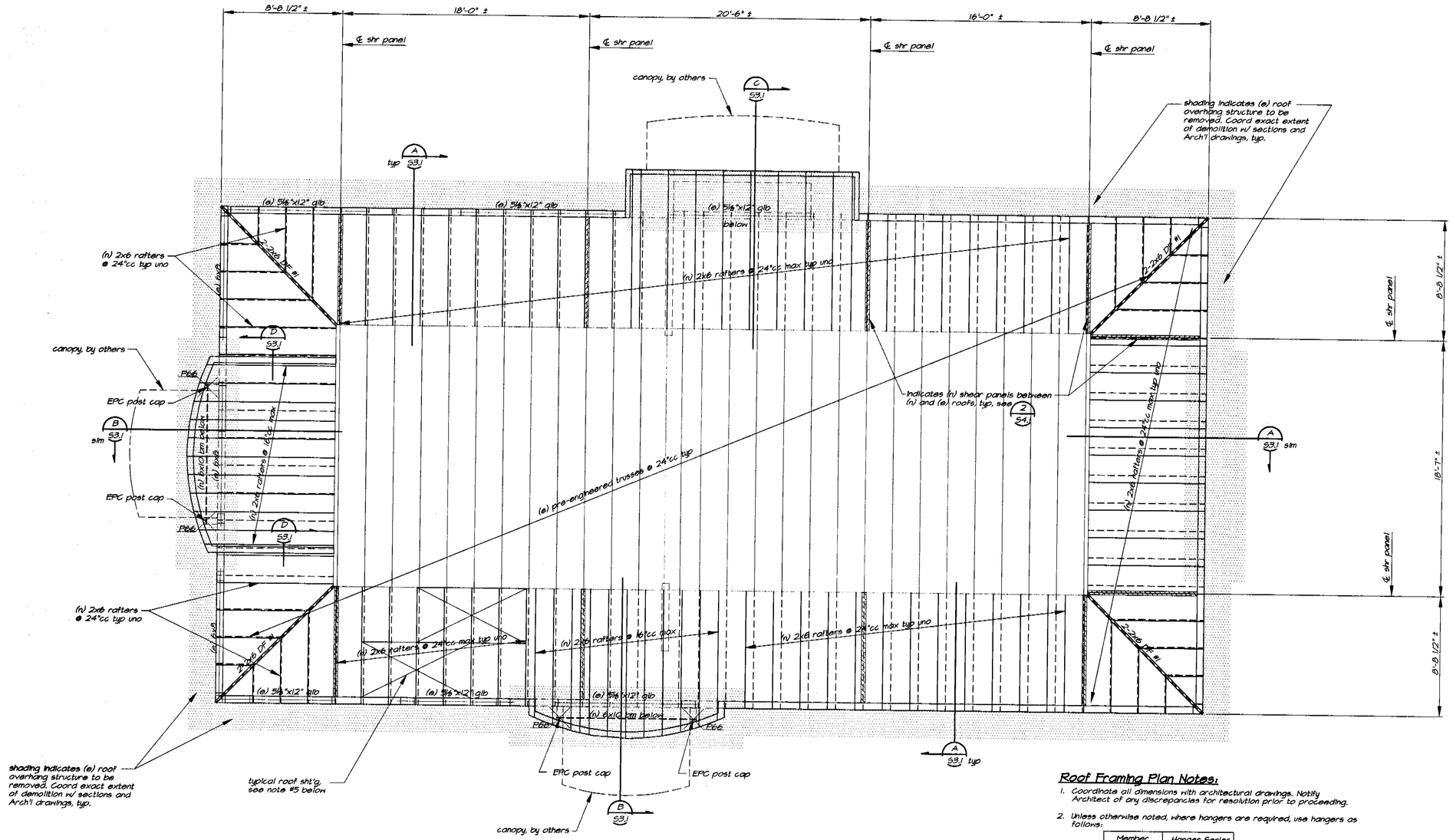

Roof Framing Plan 1/4"=1'-0"

Roof Framing Plan Notes:

1. Coordinate all dimensions with architectural drawings. Notify Architect of any discrepancies for resolution prior to proceeding.
2. Unless otherwise noted, where hangers are required, use hangers as follows:

Member	Hanger Series
2x, 2-2x	LUS
4x, 6x	HU
I-joists	ITT

3. See sheet S1.1, S1.2, and for typical notes and details. These notes and details apply to all construction unless noted or detailed otherwise.
4. Posts and columns:
   A.) Indicates wood posts typical u.n.o. See plan for sizes.
   B.) Unless noted otherwise, support all beams on 4x6 posts.
   C.) Wood Post Schedule:

Mark	Post Size	Mark	Post Size
P224	2-2x4	P46	4x6
P226	2-2x6	P48	4x8
P44	4x4	P66	6x6

   D.) Posts shall be of lumber grades as specified on sheet S1.1 unless noted otherwise on the plans or in the schedule above.
5. Typical roof sheathing shall be 15/32 APA-rated sheathing (span rating=32/16), nailed with 8d nails @ 6"cc at edges and 12"cc at field. Stagger panels typical as shown. Provide plyclips at midspan of all unsupported edges typ.
6. For post and beam connections in walls see 5/S1.2, otherwise provide all posts with PC/EPC post caps.
7. shading indicates (e) roof overhang structure to be removed. Coordinate exact extent of demolition w/ sections and Arch'l drawings, typ.
8. Indicates (n) shear panels between (n) and (e) roofs, typ, see 2/S4.1

REGISTERED PROFESSIONAL ENGINEER
JOHN M. MANDSAGER
No.3824
Exp.09/30/08
STRUCTURAL
STATE OF CALIFORNIA

THE FRAZIER GROUP
DESIGN & DEVELOPMENT SERVICES
5165 DREDGER WAY
ORANGEVALE, CALIFORNIA
95662 (916) 988-8364

ANDERS & FALLTRICK ARCHITECTS
1126 2nd STREET, SUITE 106
SACRAMENTO, CALIFORNIA 95814
TELEPHONE 916.442.3156
FACSIMILE 916.914.2427

MLA STRUCTURAL ENGINEERS INC
5005 Windplay Drive, Suite 4
El Dorado Hills, CA 95762
phone: (916) 941-2426
fax: (916) 941-2429

TACO BELL REMODEL
2770 ALUM ROCK
SAN JOSE, CA

CONTRACT:	8-22-05
BUILDING STYLE:	
PLAN VERSION:	
SITE NO:	
TFC NO:	55004
WORK DT:	9-20-05
ISSUE DT:	

TACO BELL

SHEET

ROOF FRAMING PLAN

S2.2

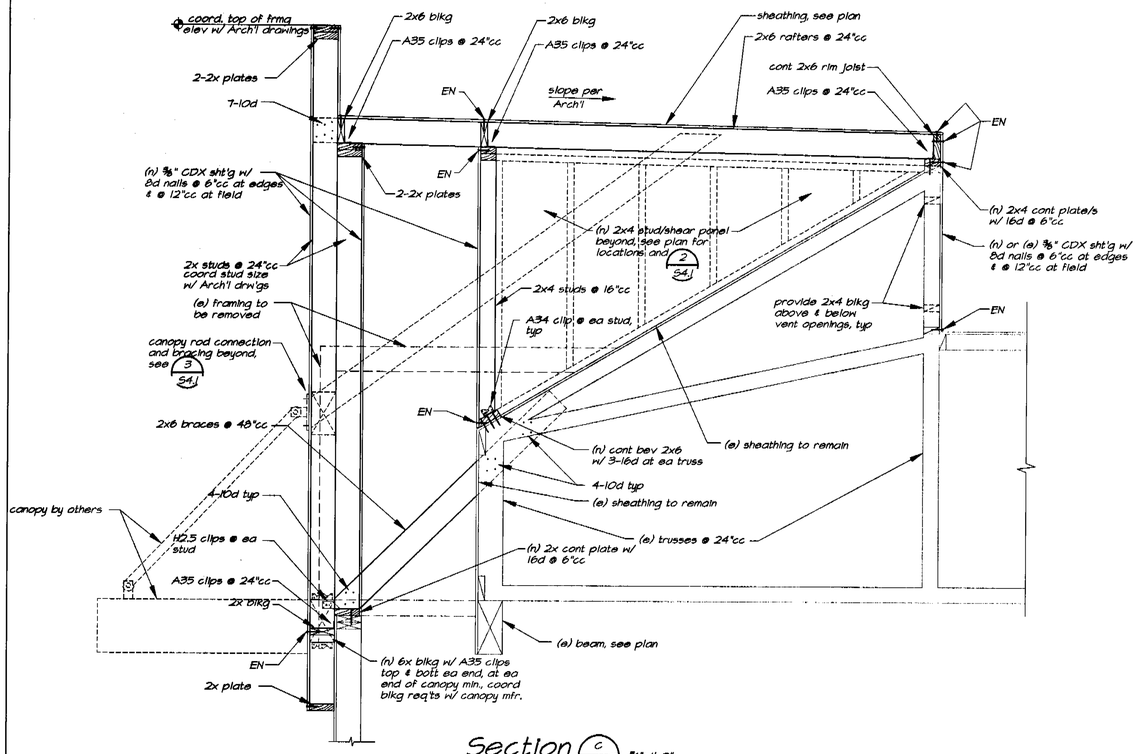

Section C/S3.1 ¾"=1'-0"

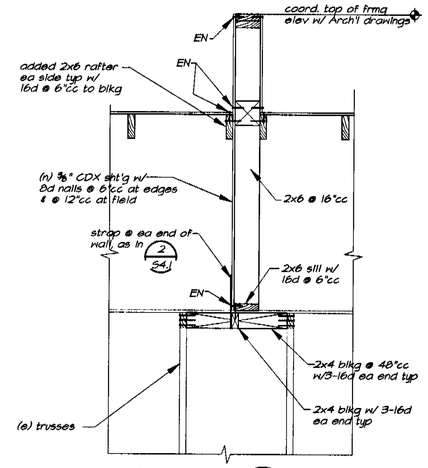

Section D/S3.1 ¾"=1'-0"

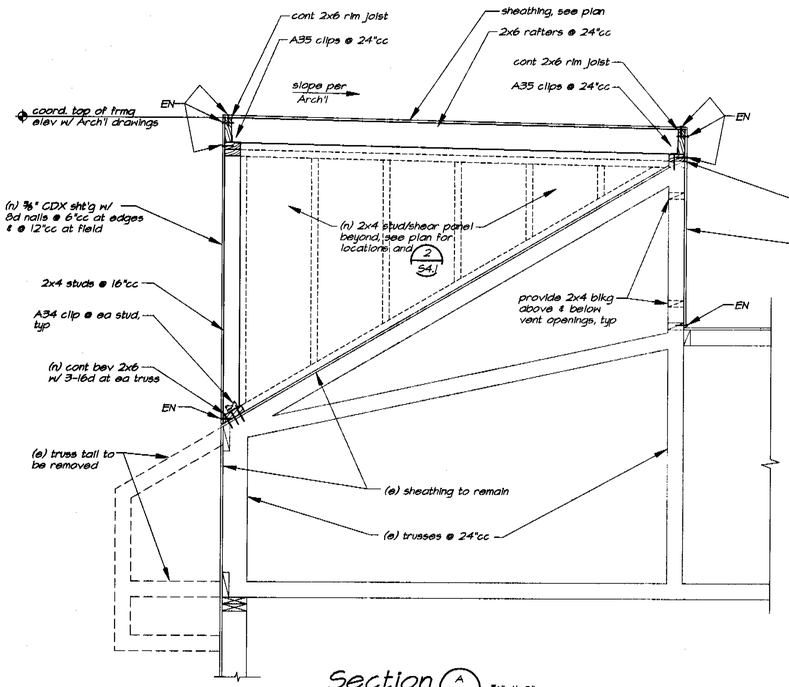

Section A/S3.1 ¾"=1'-0"

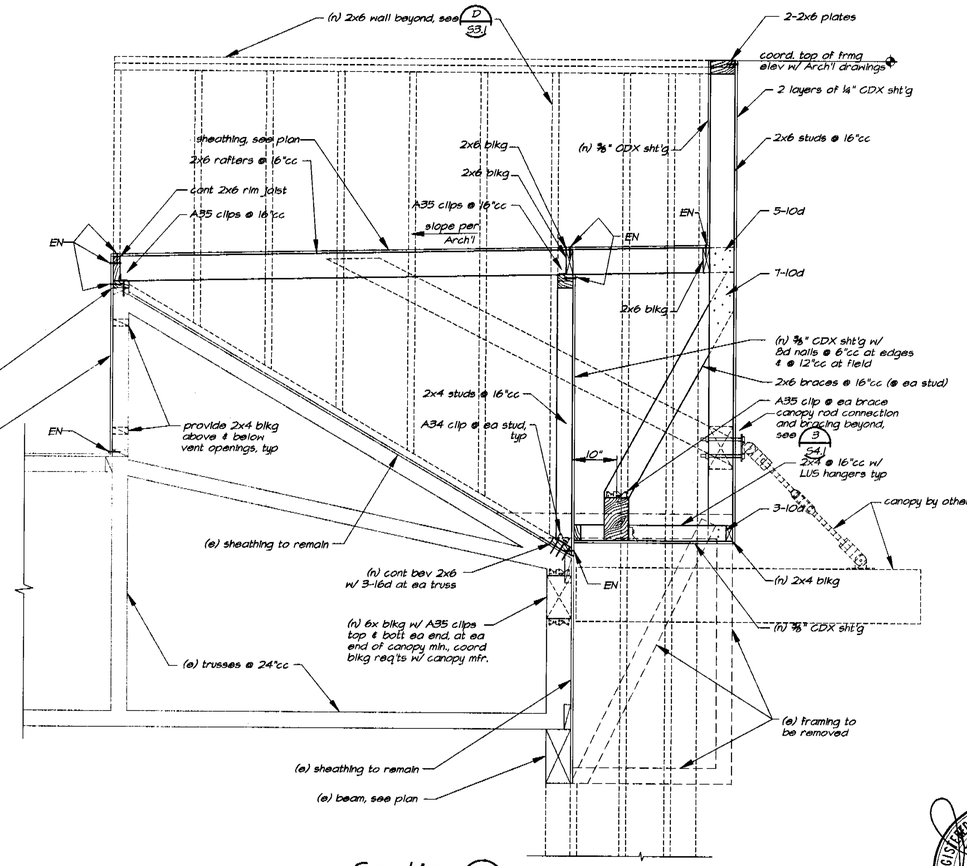

Section B/S3.1 ¾"=1'-0"

REGISTERED PROFESSIONAL ENGINEER
JOHN M. MANDSAGER
No.3824
Exp.09/30/08
STRUCTURAL
STATE OF CALIFORNIA

THE FRAZIER GROUP
DESIGN & DEVELOPMENT SERVICES
5165 DREDGER WAY
ORANGEVALE, CALIFORNIA
95662 (916) 988-8364

ANDERS & FALLTRICK ARCHITECTS
1126 2nd STREET, SUITE 106
SACRAMENTO, CALIFORNIA 95814
TELEPHONE 916.442.3156
FACSIMILE 916.914.2427

MLA STRUCTURAL ENGINEERS INC
5005 Windplay Drive, Suite 4
El Dorado Hills, CA 95762
phone: (916) 941-2425
fax: (916) 941-2429

TACO BELL REMODEL
2770 ALUM ROCK
SAN JOSE, CA

CONTRACT:	8-22-05
BUILDING STYLE:	
PLAN VERSION:	
SITE NO:	
TFG NO:	55004
WORK DT:	9-20-05
ISSUE DT:	

TACO BELL

SHEET

SECTIONS

S3.1

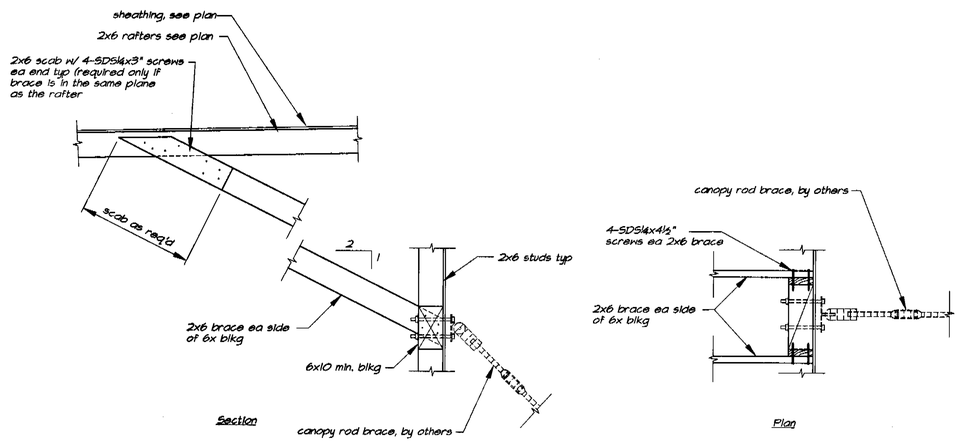

Detail 3/S4.1 ¾"=1'-0"

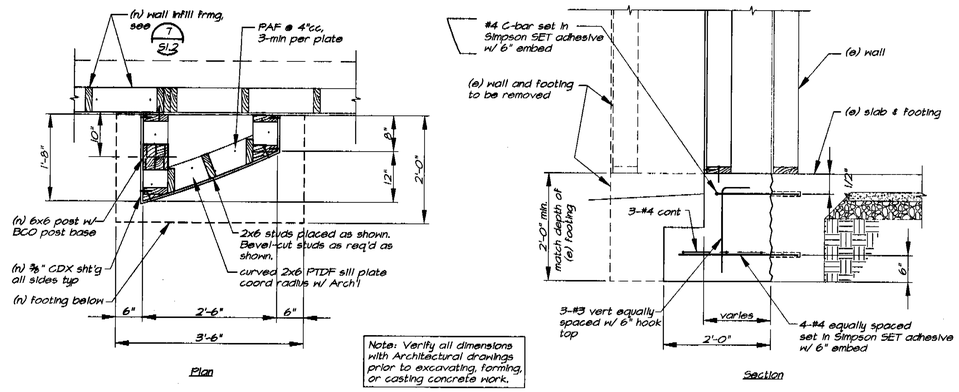

Note: Verify all dimensions with Architectural drawings prior to excavating, forming, or casting concrete work.

Detail 1/S4.1 ¾"=1'-0"

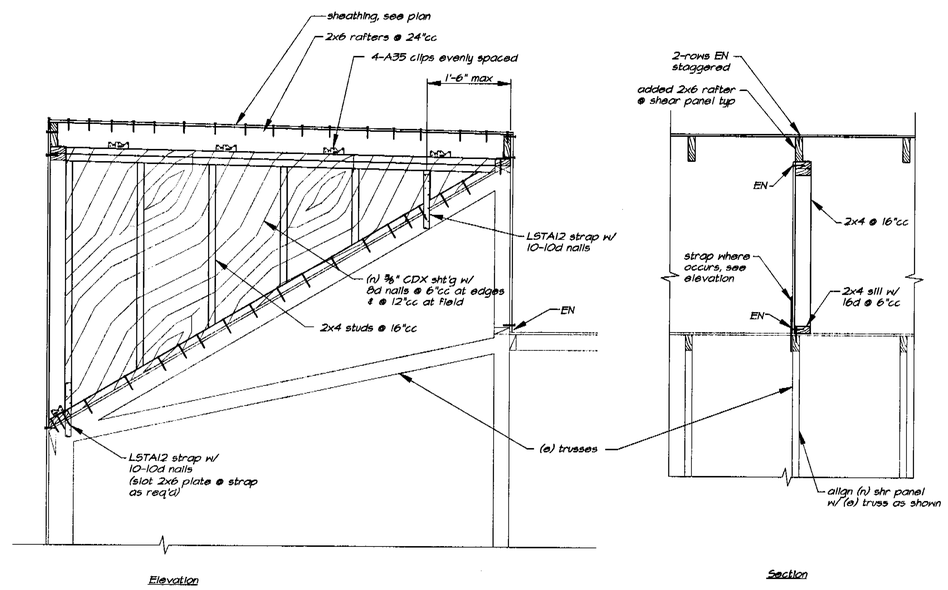

Detail 2/S4.1 ¾"=1'-0"

REGISTERED PROFESSIONAL ENGINEER
JOHN M. MANDSAGER
No.3824
Exp.09/30/08
STRUCTURAL
STATE OF CALIFORNIA

THE FRAZIER GROUP
DESIGN & DEVELOPMENT SERVICES
5165 DREDGER WAY
ORANGEVALE, CALIFORNIA
95662 (916) 988-8364

ANDERS & FALLTRICK ARCHITECTS
1126 2nd STREET, SUITE 106
SACRAMENTO, CALIFORNIA 95814
TELEPHONE 916.442.3156
FACSIMILE 916.914.2427

MLA STRUCTURAL ENGINEERS INC
5005 Windplay Drive, Suite 4
El Dorado Hills, CA 95762
phone: (916) 941-2425
fax: (916) 941-2429

TACO BELL REMODEL
2770 ALUM ROCK
SAN JOSE, CA

CONTRACT:	8-22-05
BUILDING STYLE:	
PLAN VERSION:	
SITE NO:	
TFG NO:	55004
WORK DT:	9-20-05
ISSUE DT:	

TACO BELL

SHEET

DETAILS

S4.1

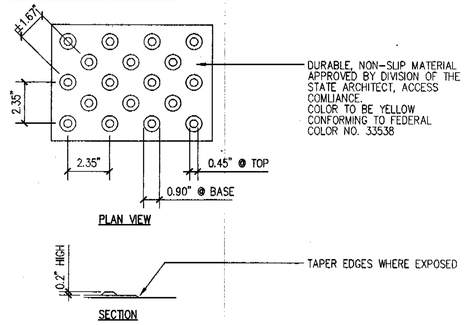

6 TRUNCATED DOMES NO SCALE

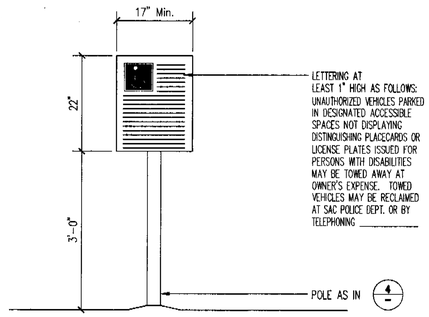

2 ACCESSIBLE ENTRANCE SIGN 3/4"=1'-0"

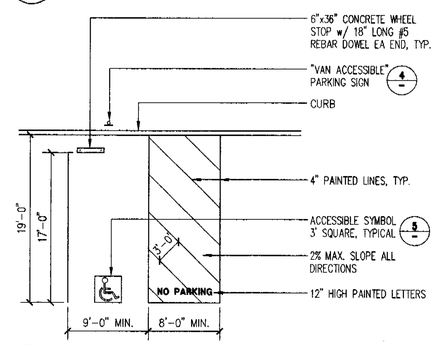

3 VAN PARKING STALL 1/8"=1'-0"

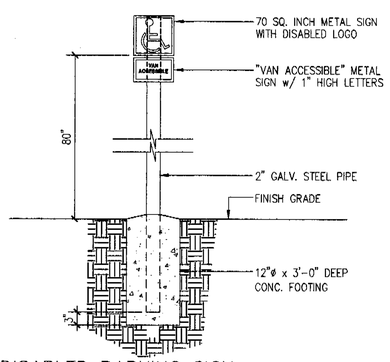

4 DISABLED PARKING SIGN 3/4"=1'-0"

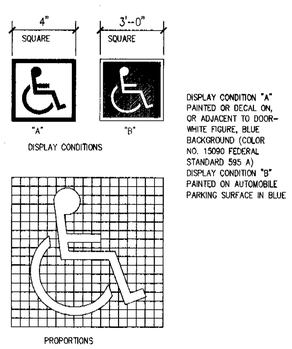

DISPLAY CONDITION "A" PAINTED OR DECAL ON, OR ADJACENT TO DOOR-WHITE FIGURE, BLUE BACKGROUND (COLOR NO. 15090 FEDERAL STANDARD 595 A)
DISPLAY CONDITION "B" PAINTED ON AUTOMOBILE PARKING SURFACE IN BLUE

5 INTERNATIONAL ACCESSIBILITY SYMBOL NO SCALE

GENERAL NOTES:

1. CONTRACTOR SHALL CONFORM TO CITY OF SAN JOSE STANDARDS
2. THE CONTRACTOR IS RESPONSIBLE FOR LOCATING ALL EXTG UTILITIES.
3. CONTRACTOR TO MAINTAIN AS BUILT PROJECT PLANS
4. CONTRACTOR TO PROVIDE ALL REQUIRED ADA SIGNAGE
5. ALL STRIPING SHALL MEET CITY STANDARDS
6. ALL SITE MARKINGS TO BE PER ALLOWED CODE
   - A. PARKING LOT STRIPING
   - B. CROSS WALKS
   - C. BOLLARDS
   - D. STEP EDGES

LEGEND

1. EXISTING CURBS
2. EXISTING SIDEWALK
3. EXISTING FIRE HYDRANT
4. EXISTING PARKING
5. EXISTING LANDSCAPE
6. EXISTING SITE LIGHTING
7. EXISTING STREET LIGHT
8. MENU BOARD SEE 16/A0.2 G.C. TO VERIFY CLEAR VIEW OF MENU BOARD
9. SPEAKER POST
10. PROJECT SIGN. SEE CONST. MGR. FOR SIZE PROVIDE CONDUIT & ELECT. CONNECTION
11. EXIT SIGN
12. ENTER SIGN
13. DRIVE THRU SIGN
14. HANDICAPPED SYMBOL
15. ACCESSIBLE PARKING SIGN
16. NOT USED
17. (E) TRASH ENCLOSURE
18. NOT USED
19. NOT USED
20. NOT USED
21. NOT USED
22. PROPERTY LINE
23. NOT USED
24. NOT USED
25. NOT USED
26. NOT USED
27. NOT USED
28. NOT USED
29. NOT USED
30. EXISTING POLE SIGN
31. NOT USED
32. NOT USED
33. NOT USED
34. NOT USED
35. NOT USED
36. CLEARANCE BAR, SEE 6/A0.2

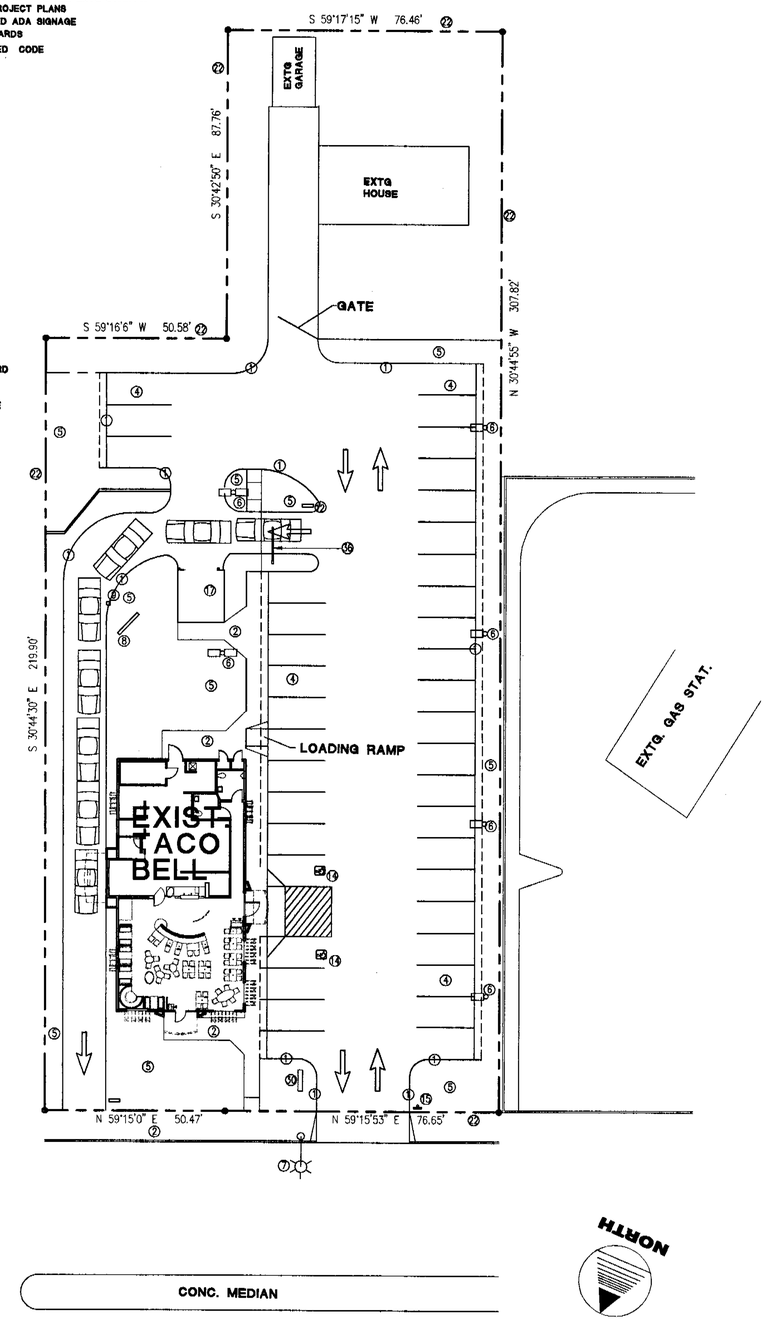

ALUM ROCK AVE

1 EXISTING SITE PLAN 1"=20'-0"

THE FRAZIER GROUP
DESIGN & DEVELOPMENT SERVICES
5165 DREDGER WAY
ORANGEVALE, CALIFORNIA
95662 (916) 988-8364

LICENSED ARCHITECT DAVID SCOTT ANDERSON No. C-29718 Ren. 2-07 STATE OF CALIFORNIA

TACO BELL REMODEL
2770 ALUM ROCK
SAN JOSE, CA

CONTRACT:	8-22-05
BUILDING STYLE:	
PLAN VERSION:	
SITE NO:	
TFG NO:	55004
WORK DT:	11-7-06
ISSUE DT:	

SHEET
SITE PLAN & DETAILS
A0.1

S:\0604-TB Alum Rock_0604_A0.1.dwg Nov 08, 2006 - 10:43am

NOT USED | 17

NOT USED | 13

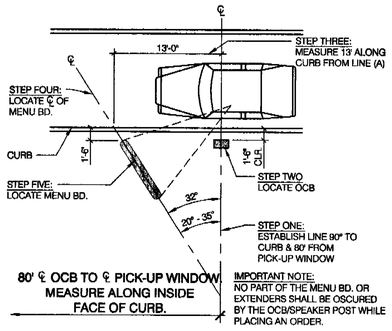

MENU BD/OCB LAYOUT N.T.S. | 9

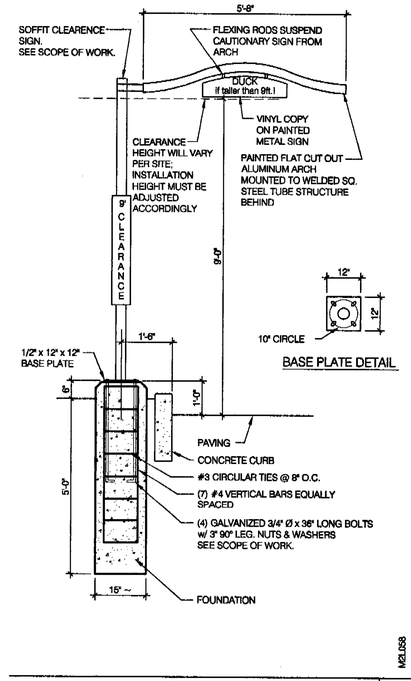

CLEARANCE BAR 1/2"-1'-0" | 6

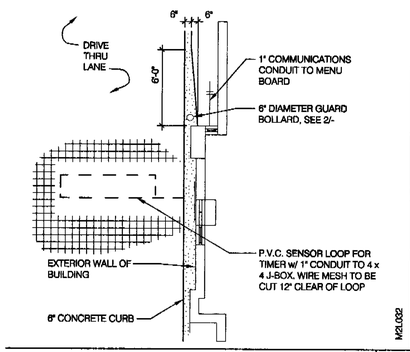

SENSOR LOOP N.T.S | 1

NOT USED | 18

NOT USED | 14

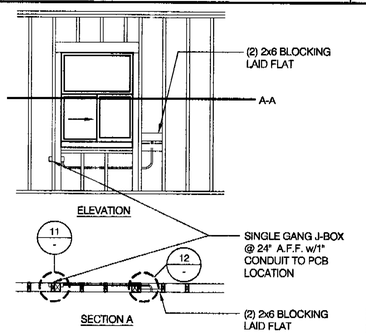

DRIVE-THRU WINDOW FRAMING N.T.S. | 10

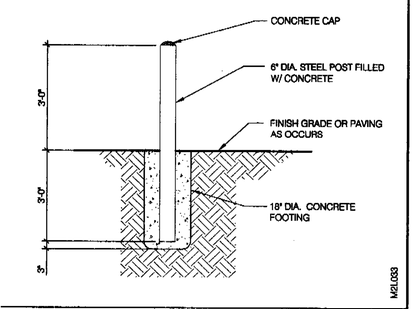

SAFETY BOLLARD 1/2" = 1'-0" | 2

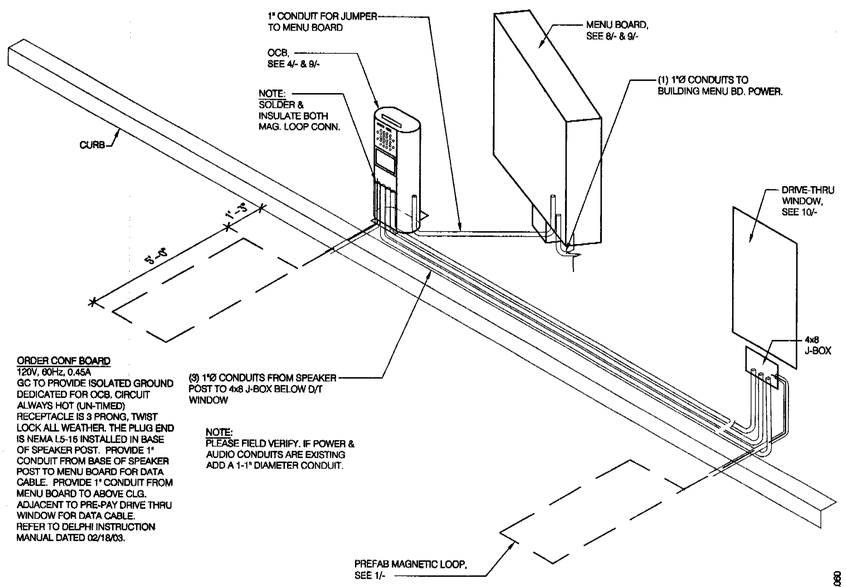

ORDER CONFIRMATION BOARD SCHEMATIC N.T.S. | 16

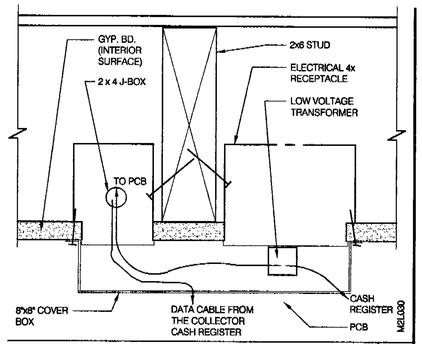

PCB POWER DETAIL N.T.S. | 11

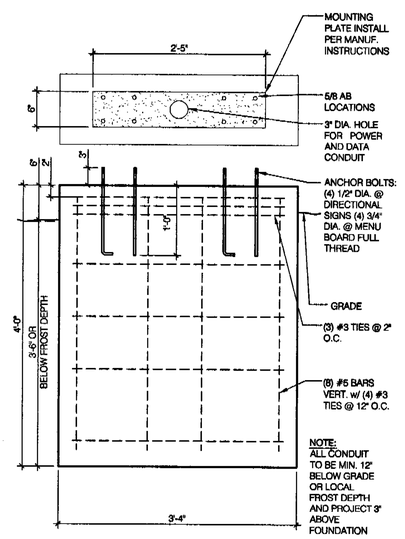

MENU BOARD FOUNDATION 1"=1'-0" | 8

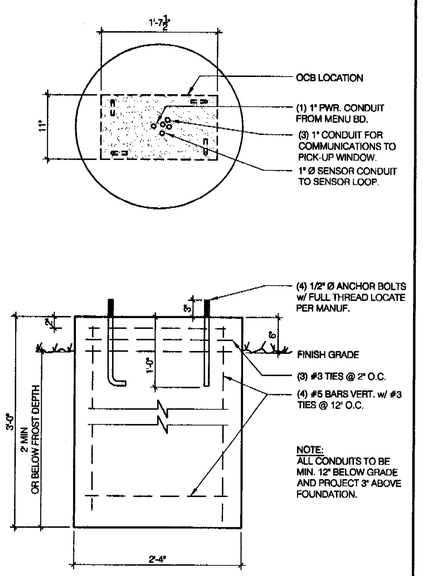

ORDER CONFIRMATION BD. FOUND. 1" = 1'-0" | 4

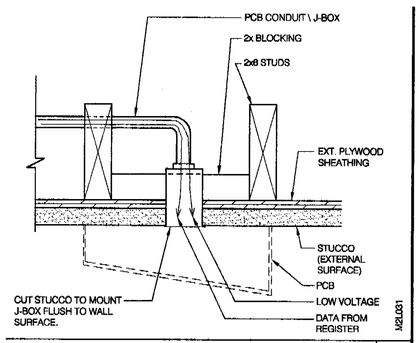

PCB J-BOX N.T.S. | 12

S:\0604-TB Alum Rock_0604_A0.2.dwg Nov 08, 2006 - 9:36am

THE FRAZIER GROUP
DESIGN & DEVELOPMENT SERVICES
5165 DREDGER WAY
ORANGEVALE, CALIFORNIA
95662 (916) 988-8364

LICENSED ARCHITECT
DAVID SCOTT ANDERS
No. C-29718
Ren. 2-7
STATE OF CALIFORNIA

TACO BELL REMODEL
2770 ALUM ROCK
SAN JOSE, CA

CONTRACT:	8-22-05
BUILDING STYLE:	
PLAN VERSION:	
SITE NO:	
TFG NO:	55004
WORK DT:	11-7-06
ISSUE DT:	

TACO BELL

SHEET
SITE DETAILS

A0.2

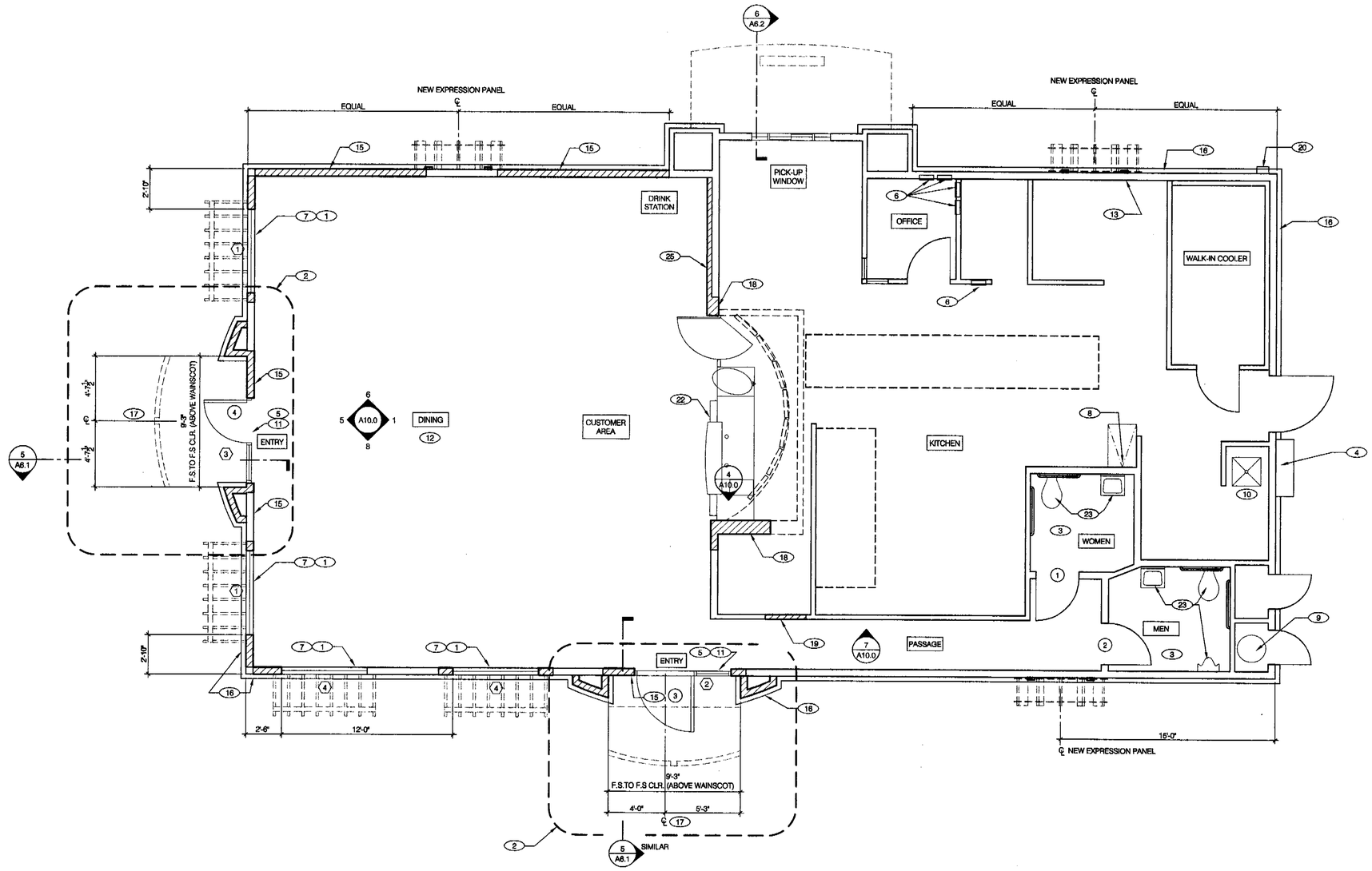

TYPICAL (E) EXTERIOR WALL: 2X6 WOOD STUDS @16" O.C. W/ 1/2" PLYWOOD (EXP 1) SHEATHING.

NEW EXTERIOR WALL: 2X6 WOOD STUDS @16" O.C. W/ 1/2" EXTERIOR GRADE PLYWOOD (EXP 1) SHEATHING AND R-19 KRAFT FACED FIBERGLASS BATT INSULATION (U.N.O.) SEE DETAILS 2, 7 & 8 / A7.0

TYPICAL (E) INTERIOR WALL TO REMAIN: 2X4 WOOD STUDS @16" O.C. (U.N.O.)

NEW INTERIOR WALL: 2X4 WOOD STUDS @16" O.C. (U.N.O.), SEE WALL SECTION 14/A11.0

1. REFER TO EXTERIOR ELEVATIONS SHEETS (A4.0) & (A4.1) FOR EXTERIOR FINISHES AND INTERIOR ELEVATIONS SHEETS (A10.0) & (A10.1) FOR INTERIOR FINISHES.

2. REFER TO STRUCTURAL DRAWINGS FOR POSTS, SHEARWALL SHEATHING & ANCHORING AND SILL PLATE REQUIREMENTS AS OCCURS.

WALL LEGEND D

DIMENSIONS:
1. ALL DIMENSIONS ARE TO FACE OF STUD U.O.N.
2. SEE FOUNDATION PLAN FOR CONDITION AT EDGE OF SLAB.

NEW WINDOWS / DOORS:
1. SEE WINDOW SCHEDULE SHEET A1.1.
2. SEE DOOR SCHEDULE SHEET A1.1.

NEW WALL FINISH SUBSTRATES:
1. PROVIDE 5/8" "GREEN BD." AT WET LOCATIONS. 12" A.F.F.
2. ALL INTERIOR WALLS SHALL HAVE 1/2" TYPE "X" GYP. BD. SUBSTRATE U.O.N. PROVIDE 5/8" THICK TYPE "X" WHERE REQUIRED TO MATCH EXISTING.
3. PROVIDE 5/8" THICK CEMENTITIOUS BOARD FROM FLOOR SLAB TO 12" ABOVE FLOOR AT DINING ROOM, SERVICE AREA & KITCHEN OF REMODEL. NOT REQUIRED IN OFFICE.
4. ALL JOINTS, GAPS AND SPACES LEADING TO HOLLOW OR INACCESSIBLE SPACES ARE TO BE SEALED WITH NSF APPROVED SEALANTS.
5. SEE SHEETS A10.0 & A10.1 FOR ROOM FINISHES.
6. PROVIDE 1/2" CEMENT BOARD SUBSTRATE AT ALL TOILET ROOM WALLS.
7. PROVIDE 5/8" THICK EXPOSURE 1 PLYWOOD SUBSTRATE AT ALL WALLS. EXCEPT IN THE DINING ROOM, TOILET ROOMS, CUSTOMER AREA AND PASSAGE.
8. INTERIOR WALLS WHICH HAVE RECESSED OR SURFACE MOUNTED EQUIPMENT TO BE PROVIDED WITH PROPER BLOCKING.
9. PROVIDE 5/8" THICK CEMENTITIOUS BOARD FULL HEIGHT ON WALLS WITH NEW FULL HEIGHT TILE. (TOILET ROOMS & DRINK STATION AS OCCUR. SEE INTERIOR ELEVATIONS, SHEETS A10.0 & A10.1)

DECOR:
1. SEE A2.1 FOR SEATING PLAN.
2. SEE A8.0 FOR FLOOR FINISHES.
3. SEE A10.0 & A10.1 FOR WALL FINISHES.
4. SEE A9.0 FOR CEILING FINISHES.

GENERAL NOTES:
1. GENERAL CONTRACTOR SHALL PROVIDE A CLEAR SILICONE SEAL JOINT @ ALL PERMANENTLY MOUNTED EQUIPMENT, COUNTERS AND CEILING GRID THROUGHOUT THE ENTIRE STORE. MASKING TAPE SHALL BE USED ON JOINTS EXCEEDING 1/4" TO PROVIDE A "COVED" CORNER.
2. DRAWINGS ARE BASED UPON WOOD FRAMING. UTILIZATION OF 20 GA METAL STUDS IN NON-BEARING INTERIOR PARTITIONS, BULKHEADS AND SOFFITS IS ACCEPTABLE.

FLOOR PLAN NOTES C

FLOOR PLAN 1/4"=1'-0" A

1. NEW WINDOW. SEE WINDOW SCHEDULE A1.1
2. REMOVE & REPLACE EXISTING TOWER WITH NEW TOWER, SEE SHEETS A6.1 & 6.2.
3. REMODEL RESTROOMS. MUST CONFORM TO MINIMUM CBC & ADA REQUIREMENTS. SEE A10.1
4. (E) ELECTRICAL MAIN SWITCHBOARD (MSB)., SEE ELECTRICAL DWGS.
5. NEW STOREFRONT AND DOOR, SEE A1.1
6. (E) RECESSED ELECTRICAL PANEL IN WALL, SEE ELECTRICAL DWGS.
7. PROVIDE WINDOW SILLS WITH SOLID SURFACE LEDGE. SEE DETAIL 4/A7.1
8. (E) ROOF ACCESS LADDER.
9. (E) WATER HEATER.
10. (E) MOP SINK
11. PROVIDE ACCESS COMPLIANT THRESHOLDS AT ENTRY DOORS. SEE DETAIL 8/A7.1
12. PROVIDE FIRE EXTINGUISHERS PER LOCAL CODE, COORDINATE WITH FIRE MARSHAL.
13. NEW ELECTRICAL PANEL, SEE ELECTRICAL DWGS.
14. NOT USED.
15. INFILL (E) WINDOW/STOREFRONT OPENING WITH NEW CONSTRUCTION.
16. STONE VENEER WAINSCOT. SEE EXTERIOR ELEVATIONS
17. CENTER NEW TOWER ON ORIGINAL TOWER LOCATION.
18. NEW INTERIOR WALL CONSTRUCTION. SEE DETAIL 14/A11.0.
19. INFILL EXISTING OPENING. NEW SUBSTRATE TO ALIGN WITH EXISTING ON BOTH SIDES.
20. (E) GAS METER.
21. VERIFY CONDITION OF WINDOW AND FRAME. WINDOW AND FRAME TO REMAIN IF IN GOOD CONDITION AND LESS THAN 8'-6" IN HEIGHT FROM FLOOR, TO ALLOW TRELLIS TO BE INSTALLED.
22. PROVIDE NEW C.T. WAINSCOT PER SHEET A10.1
23. REPLACE (E) TOILET FIXTURES & ACCESSORIES SEE SHEET A10.1.
24. (E) FLOOR SINK TO BE RELOCATED AS NECESSARY.
25. FURR (E) SHEAR WALL AS REQUIRED FOR NEW RECESSED EQUIPMENT. DO NOT PUNCH HOLES IN (E) SHEAR PLYWOOD.

KEY NOTES B

THE FRAZIER GROUP
DESIGN & DEVELOPMENT SERVICES
5165 DREDGER WAY
ORANGEVALE, CALIFORNIA
95662 (916) 988-8364

LICENSED ARCHITECT
DAVID SCOTT ANDERS
No. C-29718
Ren. 2-07
STATE OF CALIFORNIA

TACO BELL REMODEL
2770 ALUM ROCK
SAN JOSE, CA

CONTRACT:	8-22-05
BUILDING STYLE:	
PLAN VERSION:	
SITE NO:	
TFG NO:	55004
WORK DT:	11-7-06
ISSUE DT:	

SHEET
FLOOR PLAN
A1.0

S:\0604-TB Alum Rock_0604_A1.0.dwg Nov 08, 2006 - 9:41am

NOT USED N.T.S. 10

1. SEE "GLASS SCHEDULE" FOR TYPES.
2. REFER TO FLOOR PLAN, ELEVATIONS AND WALL SECTIONS FOR ROUGH OPENING DIMENSIONS.
3. NOT USED
4. ALL DIMENSIONS FOR THIS DRAWING ARE EDGE OF FRAME TO EDGE OF FRAME.
5. ALL ALUMINUM WINDOW FRAMES SHALL HAVE A "DARK-BRONZE" ANODIZED FINISH

GLASS SCHEDULE

(A) 1" INSULATED GLASS
(B) 1" INSULATED TEMPERED GLASS
(C) 1/4" TEMPERED GLASS

NOTE:
SHADING COEFFICIENT SPECIFICATION PER LOCAL CODE REQUIREMENTS.
DAYTIME VISIBILITY INTO DINING ROOM SHALL BE MAINTAINED.

WINDOW TYPE NOTES N.T.S. 8

NOT USED N.T.S. 4

REFERENCE KEY NOTES: (SEE SCHEDULE FOR APPLICABLE NOTES)

1. ALL EXIT DOORS SHALL HAVE LISTED EXIT HARDWARE THAT IS OPERABLE FROM THE INSIDE AT ALL TIMES WITHOUT THE USE OF A KEY, THUMB TURN, OR ANY SPECIAL KNOWLEDGE OR EFFORT.
2. ALL HARDWARE SHALL BE US32D U.O.N.
3. ALL HM FRAMES SHALL BE 16 GA STEEL U.O.N.
4. ALL LOCKS SHALL BE FALCON 6 PIN INTERCHANGEABLE CORE SUPPLIED AND INSTALLED BY THE G.C. ALL EXTERIOR LOCKS SHALL BE PROVIDED WITH CONSTRUCTION CORES. ALL PERMANENT CORES SHALL BE KEYED ALIKE.
5. PERMANENT CORES SHALL BE SHIPPED TO THE RESTAURANT GENERAL MANAGER.
6. MOUNT DOOR CLOSURES ON TOILET ROOM OR KITCHEN SIDE ONLY.
7. NOT USED
8. PROVIDE PUSH/ PULL PLATES.

   IF REQUIRED BY LOCAL CODE, STOREFRONT DOOR PANIC HARDWARE SHALL BE : DOR-O-MATIC 2092 RIM PANIC HARDWARE AND EXTERIOR PULLS WITH QUALITY #520 DOOR PULL.
9. MOUNT KICKPLATE ON BOTH SIDES.
10. MAXIMUM DOOR OPERATING PRESSURE : 5 LBS.
11. RESTROOM DISABLED ACCESS (BRAILLE) SIGN REQUIRED AT SIDE OF EACH DOOR - (1) MEN; (1) WOMEN
12. RESTROOM (CIRCLE & TRIANGLE) SIGNS SHALL BE PLACED ON THE DOOR AS REQUIRED BY ADA.
13. REMOVABLE MULLION.
14. WOOD DOORS SHALL BE DL-1 LAMINATE FINISH, U.N.O. FRAMES SHALL BE PAINTED. SEE FINISH SCHEDULE SHT A8.1.
15. ALL ALUMINUM STOREFRONT DOOR FRAMES SHALL HAVE AN DARK BRONZE ANODIZED FINISH.

DOOR SCHEDULE NOTES 1

DOOR NO.	DOOR SIZE	PAIR	TYPE	DOOR	FRAME	BUTTS 1	BUTTS 2	BUTTS 3	BUTTS 4	LOCKS 1	LOCKS 2	LOCKS 3	LOCKS 4	LOCKS 5	LOCKS 6	CLOSERS 1	CLOSERS 2	CLOSERS 3	KICKPLATE 1	KICKPLATE 2	KICKPLATE 3	KICKPLATE 4	THRESHOLD 1	THRESHOLD 2	THRESHOLD 3	THRESHOLD 4	DOOR STOP 1	DOOR STOP 2	DOOR STOP 3	PUSH	PULL	MISCELLANEOUS				DETAIL LOCATIONS			DOOR KEY NOTES
		SEE DOOR TYPE ELEVATIONS				1 PR VISTA OFFSET PIVOTS (T&B)	1 1/2 PR McKINNEY #TA2731, 4-1/2" x 4-1/2"	CONT. HINGE INCLUDED IN PACKAGE	1 PR STANLEY 2060R, 4-1/2" x 4-1/2" - 28D	FALCON #7511 DG WIC	EXTERIOR "LATCH GUARD"	PANIC HARDWARE INCLUDED IN PACKAGE	FALCON C962 OR C996 AS REQUIRED	SARGENT 7L85-LB (PRIVACY)	JACKSON S-490	DOORMAN CLOSER INCLUDED IN PACKAGE	STAINLESS STEEL 10" x 34"	KICKPLATE INCLUDED IN PACKAGE	STAINLESS STEEL 10" x 22"	STAINLESS STEEL 16" x 34"	VISTA # TH43	THRESHOLD INCLUDED IN PACKAGE				FLOOR STOP - QUALITY 433ES	HINGE STOP - STANLEY #6627 (US26)	QUALITY W302-26D	PUSH PLATE #40.PI-16" QUALITY S.S.	PULL PLATE #1610A 4" x 16" - QUALITY S.S.	SWEEP & WEATHERSTRIP INCL. IN PACKAGE	SWEEP (VISTA 231 STD) NGP 101VA	UNDERCUT 3/4"	PROVIDE A SIGN STATING "THIS DOOR TO REMAIN UNLOCKED DURING BUSINESS HOURS"	COAT HOOK - IVES 571-492	DOOR SIGN	HEAD	JAMB	SILL	PROVIDE A SIGN STATING "THIS DOOR TO REMAIN UNLOCKED DURING BUSINESS HOURS" AT EACH ENTRY DOOR
1	3'-0" x 6'-8" x 1-3/4"	A	WD	(E)		X								X	X				X								X			X				X			X		9/A7.1	9/A7.1		6,9,10,11,12,14
2	3'-0" x 6'-8" x 1-3/4"	A	WD	(E)		X								X	X				X								X			X				X			X		9/A7.1	9/A7.1		6,9,10,11,12,14
3	4'-0" x 7'-0" x 1-3/4"	B	AL	AL	X								X		X							X										X		X					7/A7.1	7/A7.1	8/A7.1	1,8,10,15
4	3'-0" x 7'-0" x 1-3/4"	C	AL	AL	X								X		X							X										X		X					7/A7.1	7/A7.1	8/A7.1	1,8,10,15

DOOR SCHEDULE 2

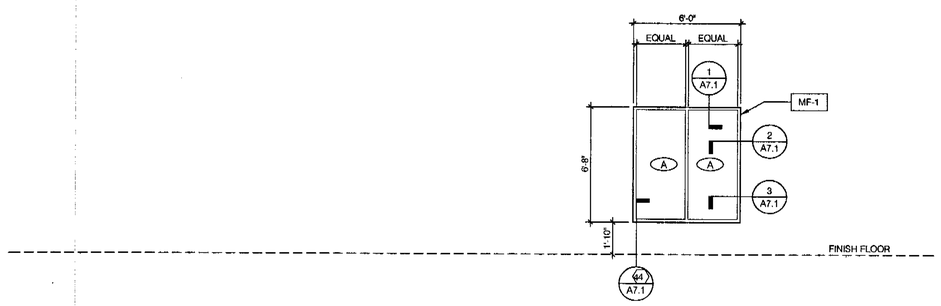

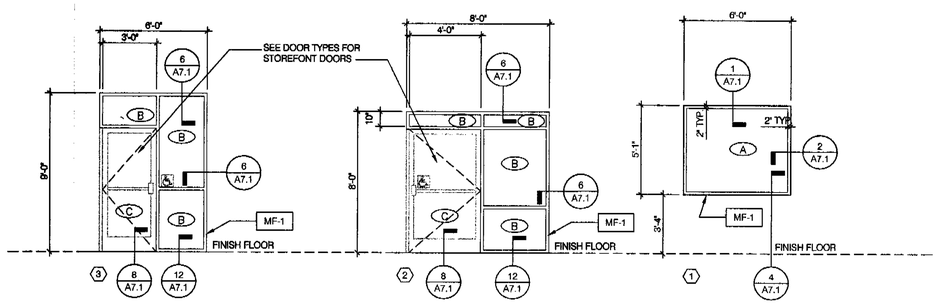

NOTE: DIMENSIONS ON THIS DRAWING ARE TO FRAME EDGE, FIELD VERIFY ALL DIMENSIONS PRIOR TO WINDOW FABRICATION.

WINDOW TYPES 1/4" = 1'-0" 9

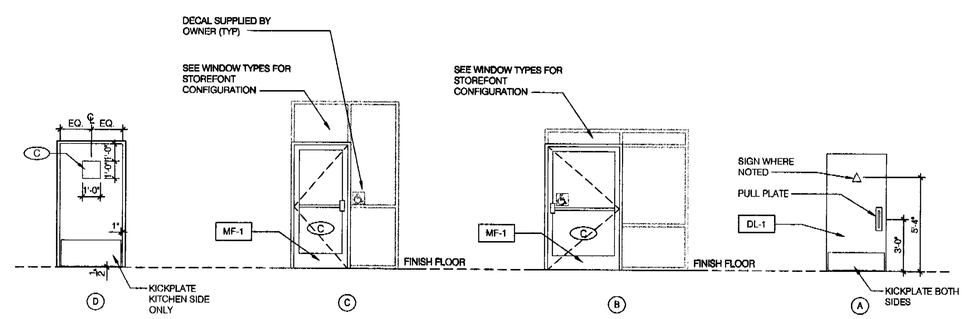

DENOTES FINISH MATERIAL. REFER TO SHEET A8.1 FOR FINISH SCHEDULE.

DOOR TYPES 1/4" = 1'-0" 3

THE FRAZIER GROUP
DESIGN & DEVELOPMENT SERVICES
5165 DREDGER WAY
ORANGEVALE, CALIFORNIA
95662 (916) 988-8364

LICENSED ARCHITECT
DAVID SCOTT ANDERSON
No. C-29718
Ren. 2-07
STATE OF CALIFORNIA

TACO BELL REMODEL
2770 ALUM ROCK
SAN JOSE, CA

CONTRACT:	8-22-05
BUILDING STYLE:	
PLAN VERSION:	
SITE NO:	
TFG NO:	55004
WORK DT:	11-7-06
ISSUE DT:	

SHEET
DOOR & WDW ELEVATIONS/ SCHEDULE
A1.1

S:\0604-TB Alum Rock_0604_A1.1.dwg Nov 08, 2006 - 9:41am

NO.	QTY.	MINIMUM EQUIPMENT REQUIRED FOR M2B	MFR. & MODEL NUMBER	PLUMB	ELECT	GAS
P - PRODUCTION LINE						
P-010	1	DUAL STUBBY LINE / MINI DUAL	DELFIELD-STUBBY LINE, DUAL, 2003, 144"x48"x78"	X	X	
P-020	2	CHEESE MELTER	STEAMER, DOUBLE, 208/60/1, TBS-2X,26 5/16"W x 16 3/8" D x 9 5/8"H, 31 AMPS, 7460 WATTS	X	X	
P-030	2	TOASTER	MODEL DETERMINED BY EAST / WEST LOCATION.		X	
P-040	2	DIGITAL SCALE	EDL-SCALE, DIGITAL, PORTION CONTROL DS10CUSTOM.			
Q - PREPARATION / STORAGE / CLEANING						
Q-010	1	FRYER	PITCO SG14-JS		X	X
Q-015	1	FRYER / RETHERMALIZER WORKSTATION.	ISS- WORKSTATION, FRYER, FRYTAB3030Y			
Q-016	1	½ HGT FRZR	DELFIED, #407CA - LH HINGE, W/ CASTERS		X	
Q-020	1	2- BAY RETHERMALIZER	PITCO-RETHERMALIZER, DOUBLE TANK RTG14S2		X	X
Q-030	1	COOK TIMER	TIMER, ZAP, TB, 12- CHANNEL, #TBZAP12		X	
Q-031	1	COOK TIMER	TIMER, 8 CHNL, FAST#TRACK24XTB		X	
Q-040	1	HOT WATER SYSTEM	BUNN-MACHINE, HOT WATER, 5 GALLON, H5X-40-208	X	X	
Q-050	1	PREP SINK	ADTB-SINK, (1) COMP, #94-1-24-18RL	X		
Q-055	2	HANDWASHING SINK	INOVATORS INTERNATIONAL #WS1417-1 (T&S FAUCET #79231/FOOT PEDAL #79075)	X		
Q-060	1	3 COMP SINK	102"L x 30"D (L to R) METCRAFT #2/20PB4/4,X/RS63NP	X	X	
Q-070	2	HEATED CABINETS	BVLS-CABINET, HOLDING, FULL SIZE, #CS82CHB (120/LH)#10605,S/S, DUTCH DOORS		X	
Q-080	1	DIGITAL THERMOMETER				
R - FRONT COUNTER						
R-010	1	INTERIOR MENU BOARD PACKAGE	EVERBRITE		X	
R-020	1	RECEIPT PRINTER			X	
R-030	1	CUP DISPENSER SLEEVE SET	4- A.J. ANTUNES, DIAL-A-CUP SLEEVES, 8-32OZ 1- A.J. ANTUNES, DIAL-A-CUP SLEEVES, 8-44OZ			
S - DRIVE THRU						
S-010	1	EXTERIOR MENUBOARD			X	
S-020	1	ORDER CONFIRMATION BOARD (OCB)	DNG-ORDER CONFIRMATION BOARD, TB, 15", DELPHI #9200-150-E-TB E SERIES, INCLUDES :		X	
S-030	1	COMMUNICATION SYSTEM	HME SYSTEM 400 CUSTOM WIRELESS D/T, #C11192		X	
S-040	1	RECEIPT PRINTER	WITH POS SYSTEM		X	
S-050	1	DRIVE THRU DRINK STATION		X	X	
S-060	1	CUP DISPENSER	ANTNS-DISPENSING UNIT, CUP DACS50 W/ CUP DISPENSER MOUNTING BRACKET			
S-070	1	OVERHEAD ICE MACHINE	MNTWC-CUBER, 1200#,115/60/1, QY1474C	X	X	
S-080	1	PRICE CONFIRMATION BOARD	EVRBRT-BOARD, PRICE CONFIRMATION, DT #E006875 (WEDGE MOUNT F/PAR 3230 REGISTER).		X	
S-090	1	DT TIMER	DRIVE-THRU TIMING SYSTEM 30. C11073, W/ VEHICLE		X	
S-440	2	FLUSH MOUNTED LID DISPENSER	TRAEX #FML-3V			
S-441	1	FLUSH MOUNTED WRAPPED STRAW DISPENSER	TRAEX #MRB-2			
T - DRINK STATION						
T-010	1	SELF SERVE DRINK STATION	RE-USE EXISTING TABLE WHEN POSSIBLE	X	X	
T-020	1	OVERHEAD ICE MACHINE	MNTWC-CUBER, 1200#,115/60/1, QY1474C	X	X	
T-030	1	BnB RACK	WITH PEPSI PACKAGE			
T-040	1	BULK CO2				
T-050	1	WATER FILTER	SELECTO #MF5-820-5	X		
B - CONTRACTOR BUILDING ELEMENTS						
B-240	3	SOAP DISPENSER (WALL MOUNT)	KAY 3675			
B-265	2	MIRROR, 18" X 36"	BOBRICK #B-165-1836 SURFACE MTD			
B-280	2	TOILET PAPER DISPENSER	KIMBERLY CLARK #AWMK09564 SURFACE MTD			
B-290	2	PAPER TOWEL DISPENSER	BOBRICK #B-262 SURFACE MTD			
B-300	2	GRAB BAR 1-1/2"DIA X 36" S.S. FIN.	BOBRICK #B6806X42 SURFACE MTD			
B-306	2	GRAB BAR 1-1/2"DIA X 42" S.S. FIN.	BOBRICK #B6806X42 SURFACE MTD			
M - MISCELLANEOUS						
F-050	1	IDU (ROUTER)	CREDIT CARD READER EQUIP. IN OFFICE REQ'D FOR COMPANY - OPTIONAL FOR FRANCH. LOCATE ON TOP SHELF IN MGR. OFFICE		X	
U-061	2	CREDIT CARD READER	REQ'D FOR COMPANY AND OPTIONAL FOR FRANCHISEES		X	

EQUIPMENT SCHEDULE E

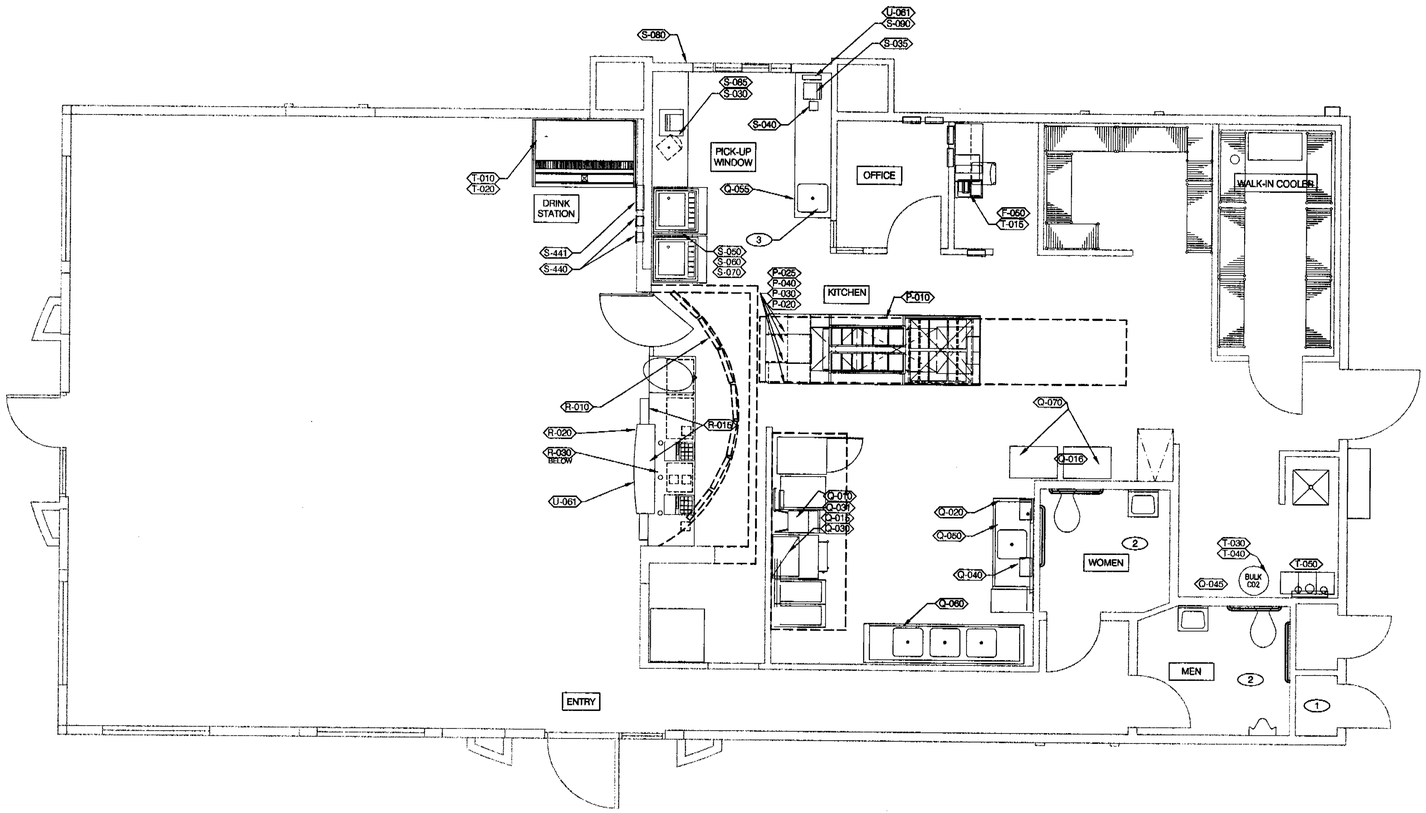

EQUIPMENT PLAN 1/4"=1'-0" A

NO.	QTY.	HIGHLY RECOMMENDED EQUIPMENT FOR M2B	MFR. & MODEL NUMBER	PLUMB	ELECT	GAS
P PRODUCTION LINE						
P-025	1	CHEESE MELTER REVERSE OSMOSIS UNIT	EVERPURE #MRS-20T	X		
Q PREPARATION / STORAGE / CLEANING						
Q-045	1	WATER SOFTNER	CEC-WATER SOFTNER, W/SALT CUNO #TBSM1254E, MONITOR,24-VOLT TRANSFORMER, 7 WORKING	X		
R FRONT COUNTER						
R-015	1	POS PAR 4000 / 3000	TERMINAL, POSXP, CAPACITIVE, CHARCOAL, M/CELERON		X	
S DRIVE THRU						
S-035	1	POS PAR 4000 / 3000	TERMINAL, POSXP, CAPACITIVE, CHARCOAL, M/CELERON		X	
S-085	1	AUTO GREETER	PART OF THE HME BASE STATION		X	
T OFFICE						
T-015	1	MONEY COUNTER	COUNTER, MONEY, F/TB, #TYR100TB, TY100 COUNTER W/ SPECIAL TB SPECIFICATIONS. SOFTWARE INCLUDES BANK OFF, NO GIFT CERTIFICATES & NO ROLL OPTION.		X	

EQUIPMENT SCHEDULE D

A. GENERAL CONTRACTOR IS RESPONSIBLE FOR ANY NECESSARY DISONNECTING/RECONNECTING OF THE BEVERAGE SYSTEM TO ACCOMMODATE THE INSTALLATION OF THE NEW BEVERAGE COUNTER.

GENERAL NOTES C

1. (E) WATER HEATER.
2. SEE SHEET P1.0 FOR PLUMBING SCHEDULE.
3. SEE DETAIL F / SHEET P1.0 FOR FOOT PEDAL DETAIL.
4. RE-USE (E) DRINK TABLE IF IN GOOD CONDITION. G.C. TO COORDINATE WITH SEATING VENDOR FOR NEW FRONT LAMINATE PANELS. (G.C. TO INSTALL IN FIELD).

KEY NOTES B

THE FRAZIER GROUP
DESIGN & DEVELOPMENT SERVICES
5165 DREDGER WAY
ORANGEVALE, CALIFORNIA
95662 (916) 988-8364

LICENSED ARCHITECT DAVID SCOTT ANDERSON No. C-29718 Ren. 2-07 STATE OF CALIFORNIA

TACO BELL REMODEL
2770 ALUM ROCK
SAN JOSE, CA

CONTRACT:	8-22-05
BUILDING STYLE:	
PLAN VERSION:	
SITE NO:	
TFG NO:	55004
WORK DT:	11-7-06
ISSUE DT:	

TACO BELL

SHEET
EQUIPMENT PLAN
A2.0

S:\0604-TB Alum Rock_0604_A2.0.dwg Nov 08, 2006 - 9:41am

MAINTAIN DISABLED ACCESSIBLE CLEARANCES THROUGHOUT, TYPICAL.

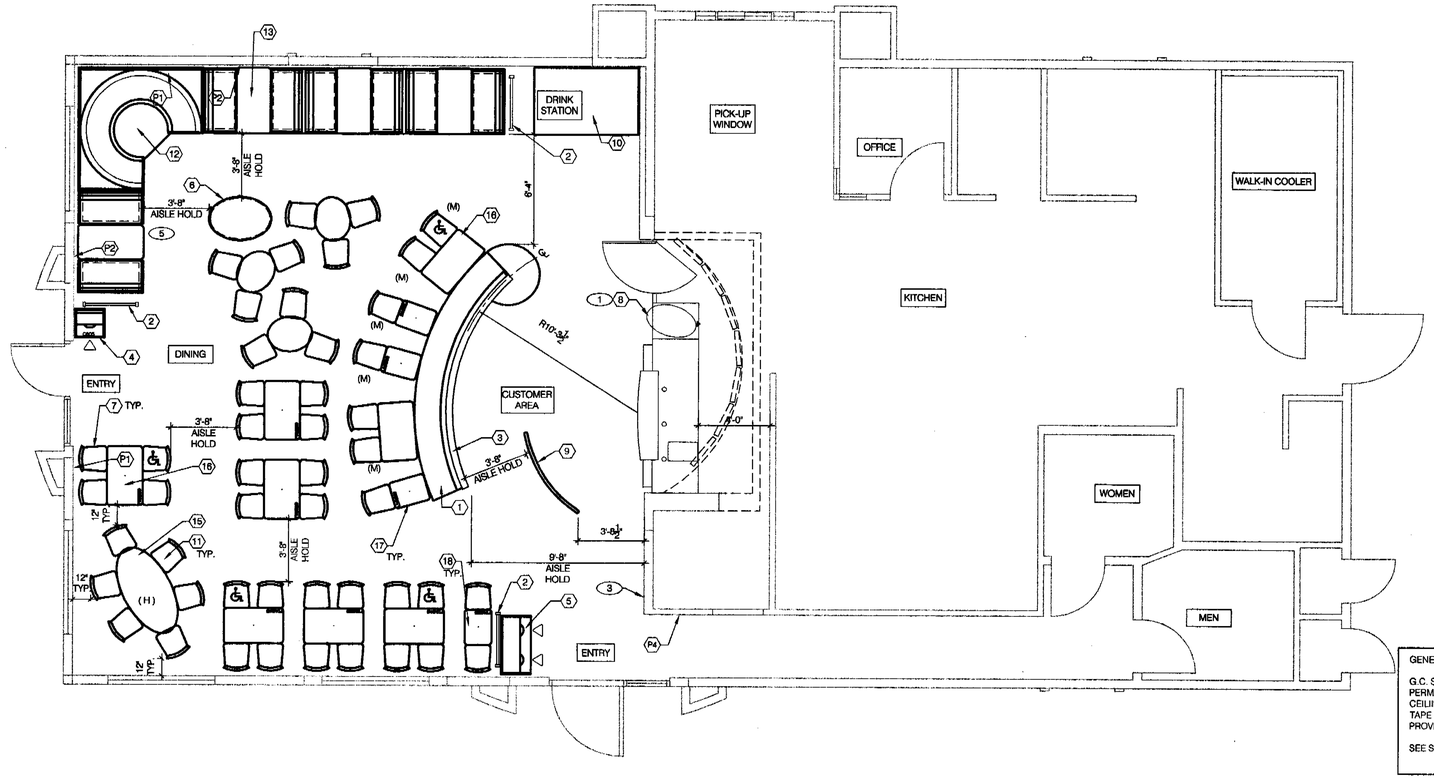

TOTAL SEATS = 52

GENERAL NOTES:

G.C. SHALL PROVIDE A CLEAR SILICONE SEAL JOINT AT ALL PERMANENTLY MOUNTED EQUIPMENT, COUNTERS AND CEILIING GRID THROUGHOUT THE ENTIRE STORE. MASKING TAPE SHALL BE USED ON JOINTS EXCEEDING 1/4" TO PROVIDE A COVED CORNER.

SEE SHEET A10.0 AND REFER TO SCOPE OF WORK.

SEATING PLAN 1/4"=1'-0" **A**

NOT USED **F**

X	QTY.	ITEM	REMARKS
1	1	DIVIDER WALL & SETTEE	BY SEATING VENDOR
2	3	DINING ROOM SCREEN	BY SEATING VENDOR
3	3	POP LADDER	BY SEATING VENDOR
4	1	TRASH RECEPTACLE / TRAY RETURN	21" x 22" , BY SEATING VENDOR
5	1	TRASH RECEPTACLE / TRAY RETURN	22" x 42" , BY SEATING VENDOR
6	1	CONDIMENT COUNTER	BY SEATING VENDOR
7	25	LOOSE CHAIR	BY SEATING VENDOR/APPROVED VENDOR
8	1	SERVING COUNTER	BY SEATING VENDOR
9	1	QUEING LINE	BY SEATING VENDOR
10	1	SELF-SERVE DRINK STATION	BY SEATING VENDOR
11	8	HIGH STOOL	BY SEATING VENDOR
12	1	CORNER BOOTH	BY SEATING VENDOR
13	2	BOOTHS	BY SEATING VENDOR
14	1	SMALL OVAL TABLES (HIGH)	BY SEATING VENDOR
15	1	LARGE OVAL TABLE (HIGH)	BY SEATING VENDOR
16	3	24x42 HC TABLE (LOW)	BY SEATING VENDOR
17	2	24x42 TABLE (LOW)	BY SEATING VENDOR
18	2	15x24 TABLE (LOW)	BY SEATING VENDOR

SEATING PACKAGE (TOTAL SEATS = 52) **E**

X	QTY.	ITEM	REMARKS
P1	2	TB01a "Open Late" (30 1/2" x 45")	SEE A10.0 FOR LOCATION OWNER SUPPLIED, GC INSTALLED
P2	2	TB01b "Drive-thru" (30 1/2" x 45")	SEE A10.0 FOR LOCATION OWNER SUPPLIED, GC INSTALLED
P3	2	TB01c "Empty" (30 1/2" x 45")	SEE A10.0 FOR LOCATION OWNER SUPPLIED, GC INSTALLED
P4	1	TL11 "Taco Bell Pledge Bd" (18 1/2" x 38") (MOUNTED ON QUALITY BACKBOARD. BACKBOARD SUPPLIED BY SEATING VENDOR.)	SEE A10.0 FOR LOCATION OWNER SUPPLIED, GC INSTALLED

ARTWORK SCHEDULE **D**

EQUIPMENT PLAN NOTES

1. "HOLD" DIMENSIONS ARE FROM FACE OF WALL / WAINSCOT FINISH.
2. G.C. TO CONFIRM "HOLD" DIMENSIONS WITH EQUIPMENT MFR / VENDOR.
3. TILE CHIPPING AROUND CORE DRILL HOLES FOR SEATING FIXTURE WILL NOT BE ACCEPTED.
4. ALL DIMENSIONS FOR SEATING / CORE DRILL PLAN SHALL BE FROM FACE OF GYP BD.
5. VERIFY ALL DIMENSIONS WITH SEATING VENDOR PRIOR TO INSTALLATION.
6. NOT USED
7. SEE INTERIOR ELEVATIONS A10.0 FOR LOCATION OF SEATING VENDOR SUPPLIED ARTWORK.
8. PROVIDE THE FOLLOWING HARDWARE FOR EACH CABINET DOOR:
   KNOB: STANLEY 4482 (1 EA)
   CATCH: STANLEY SP35 (1 EA)
   HINGE: STANLEY 1588 (2 EA)
9. VERIFY CORE DRILL LOCATIONS FOR DINING COUNTER WALL LEGS WITH VENDOR.
10. REFER TO SC SHEETS FOR SCOPE OF WORK RESPONSIBILITIES.
11. (H) - SYMBOL DENOTES A HIGH TABLE OR DINING COUNTER WITH STOOLS.
12. (M) - SYMBOL DENOTES A MOVABLE TABLE

SYMBOL DENOTES A HANDICAP ACCESSIBLE TABLE.

SEATING PLAN NOTES **C**

1. SERVICE COUNTER.
2. NOT USED
3. CORNER GUARD.
4. NOT USED
5. 30" x 48" CLEAR FLOOR SPACE FOR HANDICAP ACCESS.
6. HIGHCHAIR BY OWNER
7. NOT USED
8. RADIUS CENTERLINE FOR POP LADDER, RADIUS WALL AND SOFFIT ABOVE

FURNISHINGS ARE VENDOR SUPPLIED AND INSTALLED. REFER TO SCOPE OF WORK SHEETS.

KEY NOTES **B**

THE FRAZIER GROUP
DESIGN & DEVELOPMENT SERVICES
5165 DREDGER WAY
ORANGEVALE, CALIFORNIA
95662 (916) 988-8364

LICENSED ARCHITECT DAVID SCOTT ANDERSON No. C-29718 Ren. 2-07 STATE OF CALIFORNIA

TACO BELL REMODEL
2770 ALUM ROCK
SAN JOSE, CA

CONTRACT:	8-22-05
BUILDING STYLE:	
PLAN VERSION:	
SITE NO:	
TFG NO:	55004
WORK DT:	11-7-06
ISSUE DT:	

SHEET

SEATING PLAN

A2.1

S:\0604-TB Alum Rock_0604_A2.1.dwg Nov 08, 2006 - 9:42am

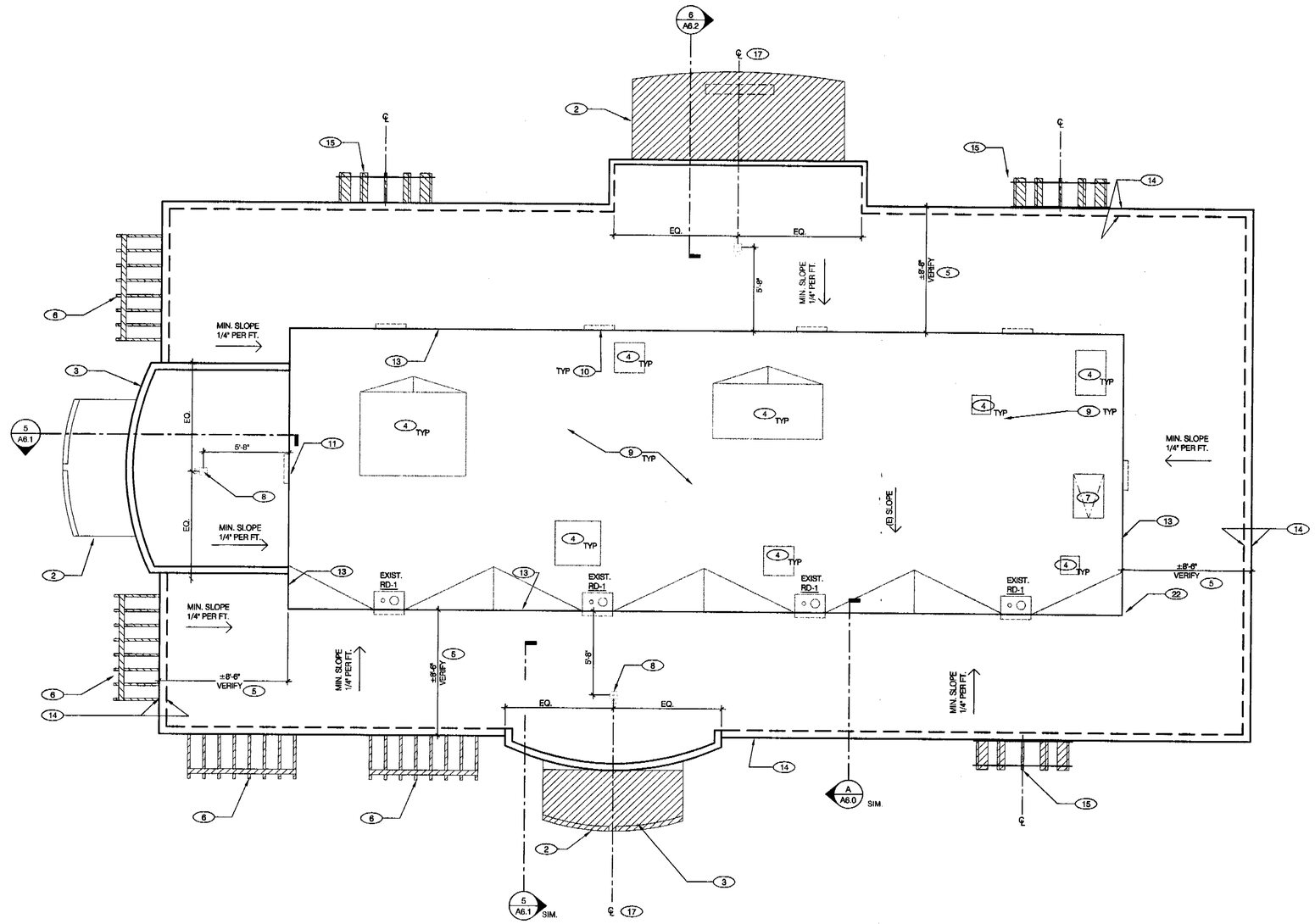

ROOF PLAN 1/4"=1'-0" | A

NOT USED | E

NOT USED | D

WATERPROOFING:
A. PAINT UNDERSIDE OF PARAPET CAP FLASHING WITH FACTORY BONDED PAINT GRIP OR PRIMER.
B. TOP NAILING AT PARAPET CAP FLASHING WILL NOT BE ACCEPTED.
C. PENETRATIONS IN ROOFING MEMBRANE AND FLASHING SHALL ONLY BE MADE AS INDICATED ON THE DRAWINGS OR SPECS.
D. SEE SPECIFICATIONS FOR SEALANT SPECS.
E. ALL SHEET MTL FLASHING SHALL BE 22 GA MIN.

FIRE DEPARTMENT NOTES:
A. BUILT-UP ROOF COVERING MATERIALS SHALL BEAR UL LABELS WITH FIRE EXPOSURE CLASS "A". SEE SPECS.

MISCELLANEOUS:
A. NO ROOF PENETRATIONS CLOSER THAN 12" FROM ANOTHER WILL BE ALLOWED.
B. EXHAUST FANS MIN. 10'-0" AWAY FROM ALL AIR INTAKE / SUPPLY.

HATCHED OBJECTS INDICATE VENDOR SUPPLIED AND INSTALLED. REFER TO SCOPE OF WORK SHEETS.

ROOF PLAN NOTES | C

1. NEW PREFABRICATED METAL ARCH. SEE SHEET A6.1 & REFER TO SCOPE OF WORK
2. NEW CANOPY AWNING. SEE DETAIL 14/A7.0 & REFER TO SCOPE OF WORK
3. NEW TB TOWER. SEE SHEET A6.1 (FRONT), 3/A6.2 (SIDE ENTRY SIDE) & 6/A6.2 (DRIVE-THRU SIDE)
4. EXISTING ROOF EQUIPMENT TO REMAIN
5. NEW PARAPET (TYP). SEE DETAIL A/A6.0
6. NEW TRELLIS/AWNINGS. SEE DETAIL 9/A7.0 & SCOPE OF WORK
7. (E) ROOF HATCH
8. NEW ACCENT UP-LIGHTS AT TOWERS. SEE ELECTRICAL DWGS. SEE DETAIL 19/7.0 FOR MOUNT
9. (E) ROOF TO BE PROTECTED & MAINTAINED (PATCH & REPAIR ANY DAMAGED AREAS).
10. PROVIDE AS REQUIRED 12x24 GALV. PREMANUFACTURED MTL. LOUVER 8'-0" O.C. PRIMED & PAINTED IN FIELD. MFR: RUSKIN (OR EQUAL) MODEL NO: L6811. SEE DETAIL 3/A7.0
11. TOWER ACCESS DOOR (24"x24"). SEE DETAILS 2/A6.1 & 12/A7.0
12. (E) ROOF DRAINS (REROUTE DRAINS & OVERFLOW, AS SHOWN, IN SEPARATE LINES WITHIN PARAPET TO EXPOSED DOWNSPOUTS AND SCUPPER ON SIDE OF BUILDING, SEE ELEVATION, SHEET A4.1) CONTRACTOR TO VERIFY EXISTING ROOF AND OVEFLOW DRAINS IS AT LEAST 3" IN SIZE.
13. (E) PARAPET WALL
14. NEW PARAPET FRAME
15. NEW EXPRESSION PANEL TRELLIS, SEE 13/A7.0. CENTER OVER EXPRESSION PANEL, SEE SHEET A1.0 FOR LOCATION.
16. NEW 2" ROOF DRAIN & OVERFLOW. DRAIN TO LOWER ROOF. ROOF DRAIN PIPING SHALL BE SCHEDULE 40 PVC PIPE ASTM A120 WITH LONG SWEEP ELBOWS. ROOF DRAIN PIPING UNDERGROUND INSIDE BUILDING, AND TO FACE OF CURB SHALL BE COATED CAST IRON HUBLESS PIPE AND FITTINGS. REFER TO DETAIL "D" THIS SHEET AND TOWER SECTION ELVATIONS ON SHEET 6.2.
17. CENTER NEW CANOPY, ARCH AND ARCH LIGHTINHG ON ORIGINAL TOWER LOCATION.
18. NOT USED.
19. NEW 12"x24" LOUVER VENTS
20. PROVIDE NEW OVERFLOW DRAIN 3" DIA. PIPE THROUGH EXTERIOR WALL.
21. (E) 3" STORM DRAIN @ (E) WALL & SPILL OUT TO CURB FACE TO REMAIN. FIELD VERIFY.
22. REMOVE (E) 3" STORM DRAIN.

ROOF PLAN KEY NOTES | B

THE FRAZIER GROUP
DESIGN & DEVELOPMENT SERVICES
5165 DREDGER WAY
ORANGEVALE, CALIFORNIA
95662 (916) 988-8364

LICENSED ARCHITECT
DAVID SCOTT ANDERSON
No. C-29718
Ren. 2007
STATE OF CALIFORNIA

TACO BELL REMODEL
2770 ALUM ROCK
SAN JOSE, CA

CONTRACT:	8-22-05
BUILDING STYLE:	
PLAN VERSION:	
SITE NO:	
TFG NO:	55004
WORK DT:	11-7-06
ISSUE DT:	

SHEET
ROOF PLAN
A3.0

S:\0604-TB Alum Rock_0604_A3.0.dwg Nov 08, 2006 - 9:47am

SYMBOL	AREA	MANUFACTURER	COLOR	ALTERNATE MFR.	ALTERNATE COLOR
1	MAIN WALL COLOR	SHERWIN WILLIAMS	CAMELBACK SW6122		
2	ACCENT WALL COLOR	SHERWIN WILLIAMS	AMBER WAVE SW6657		
3	ACCENT WALL COLOR	SHERWIN WILLIAMS	ROOKWOOD CLAY SW2823		
4A	PARAPET BAND COLOR	SHERWIN WILLIAMS	GOLDEN RULE SW6383		
4B	PARAPET BAND COLOR	SHERWIN WILLIAMS	AVOCADO SW2861		
4C	PARAPET BAND COLOR	SHERWIN WILLIAMS	ROOKWOOD TERRA COTTA SW2803		
4D	PARAPET BAND COLOR	SHERWIN WILLIAMS	PLUMMY SW6558		
5	CONTINUOUS PARAPET CAP	SHERWIN WILLIAMS	IRON ORE SW7069		
6	WAINSCOT STONE	CORONADO STONE	CARMEL MOUNTAIN	OWENS CORNING ~~CULTURED STONE~~	COUNTRY LEDGE STONE ~~WALNUT - CSU2004J~~
7	2" SILL	CORONADO STONE	CHABLIS		

EXTERIOR PAINT SCHEDULE E

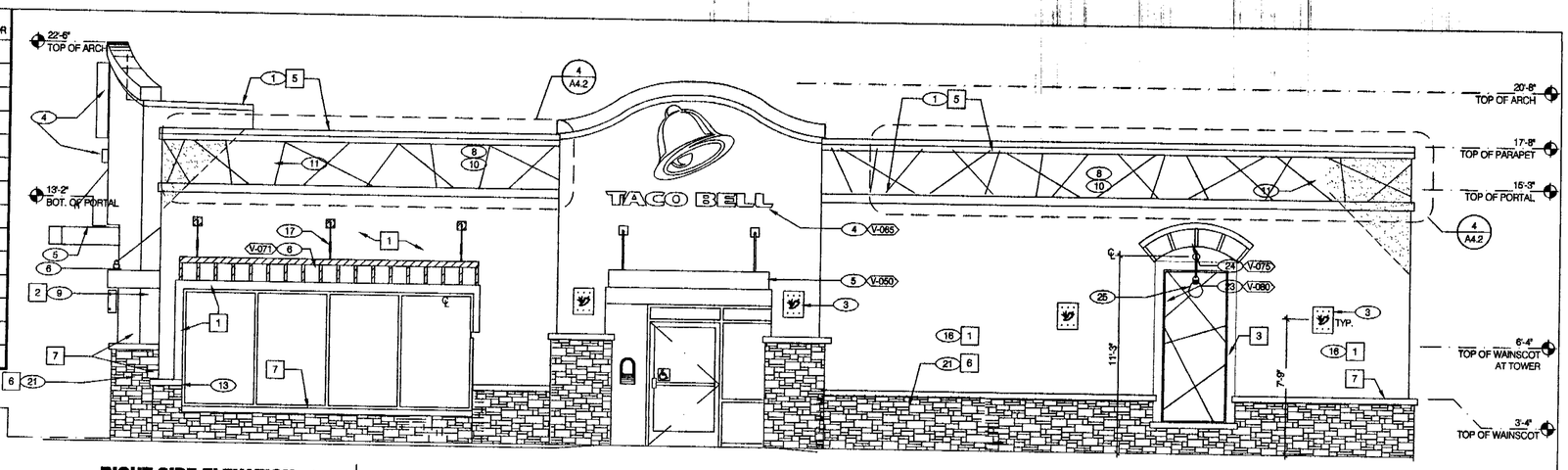

RIGHT SIDE ELEVATION 1/4"=1'-0"

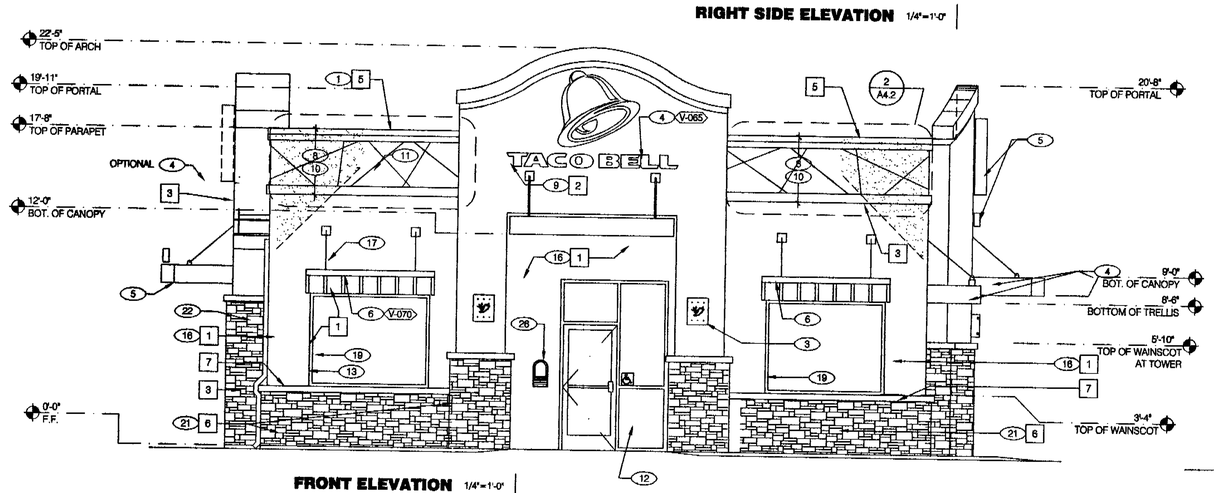

FRONT ELEVATION 1/4"=1'-0"

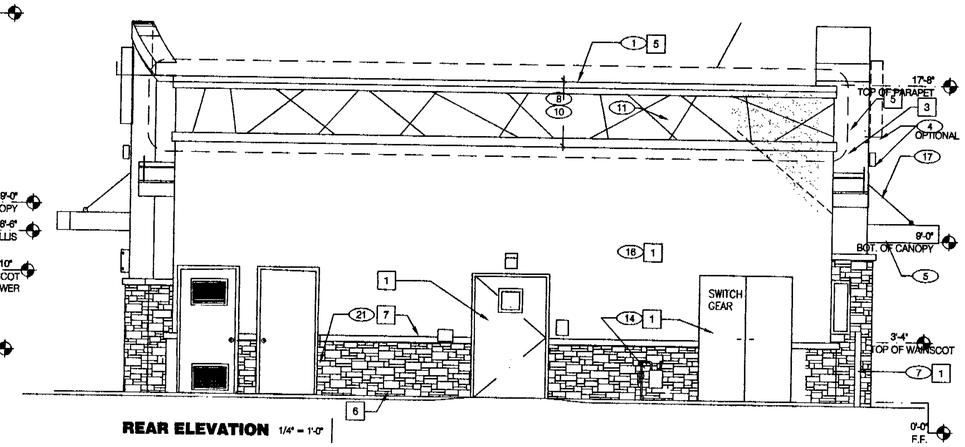

REAR ELEVATION 1/4" = 1'-0"

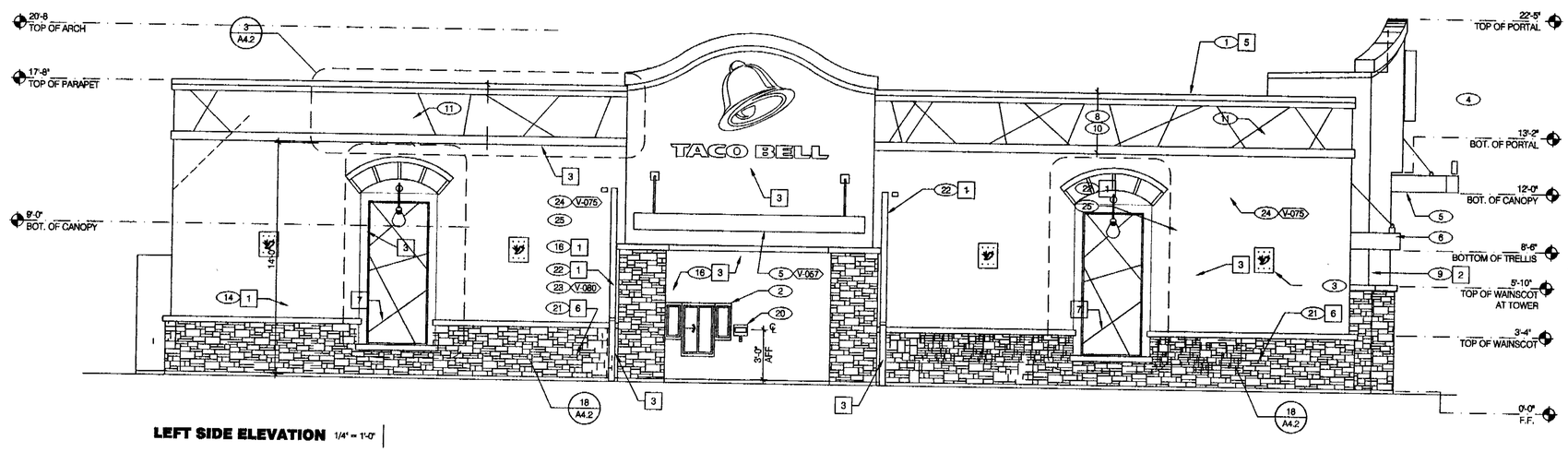

LEFT SIDE ELEVATION 1/4" = 1'-0"

KEY NOTES

1. GALV. MTL. EDGE FLASHING - PRIME & PAINT IN FIELD. SEE DETAIL 2/A7.0, U.N.O.
2. (E) DRIVE-THRU WINDOW
3. WALL SCONCE. SEE ELEV. FOR MOUNTING HEIGHT OF FIXTURE. PROVIDE UL LISTED FOR WET LOCATION W/ DECORATIVE SHROUD. SEE RCP A9.0.
4. BUILDING SIGN - UNDER SEPARATE PERMIT. SEE SCOPE OF WORK.
5. METAL CANOPY - UNDER SEPARATE PERMIT. SEE SCOPE OF WORK.
6. TRELLIS. SEE DETAIL 9/A7.0 & SCOPE OF WORK.
7. PIPE BOLLARD. SEE 2/A0.2.
8. DECORATIVE CORNICE. SEE ELEVATIONS 1, 2, 3, & 4/A4.2.
9. TACO BELL TOWER . SEE SHEET A6.1 & A6.2
10. NEW PARAPET CONSTRUCTION. SEE DETAIL A/A6.0.
11. EXISTING PARAPET WALL BEYOND, TYPICAL.
12. NEW ALUMINUM STOREFRONT WITH DOOR. SEE WINDOW & DOOR SCHEDULE A1.1.
13. NOT USED
14. EXISTING GAS AND ELECTRICAL METERS, INCLUDING EQUIPMENT ENCLOSURES - PAINT. RELOCATE AS NECESSARY.
15. PREFABRICATED METAL ARCH. SEE SHEETS A6.1, A6.2 & SCOPE OF WORK
16. REMOVE & REPLACE ALL EXISTING STUCCO WITH NEW LIGHT SAND EIFS FINISH. SEE DETAIL 20/A7.1 FOR TYPICAL EIFS ASSEMBLY.
17. AWNING SUPPORT RODS, TYPICAL.
18. TOWER LIGHT, TYPICAL AT FLYING ARCH. SEE ROOF PLAN & ELECT. DWGS.
19. NEW ALUMINUM STORE FRONT WINDOW SYSTEM. SEE WINDOW SCHEDULE.
20. INSTALL NEW PCB JUNCTION BOX. SEE DETAIL 10/A0.2.
21. NEW STONE VENEER WAINSCOT. SEE DETAIL 8/A7.0 AND SPECIFICATIONS.
22. NEW DOWN SPOUT FOR DRAIN AND SCUPPER FOR OVERFLOW. PENETRATE EIFS SURFACE PER MANUFACTURER. PAINT TO MATCH FACADE. DOWN SPOUT SHALL FOLLOW CONTOUR OF WALL FACE.
23. EXPRESSION PANEL BELL. SEE 18/A4.2.
24. EXPRESSION PANEL TRELLIS. SEE 13/A7.0.
25. GOOSE NECK LIGHT FIXTURE. SEE ELECTRICAL DRAWINGS.
26. TACO BELL "OPEN LATE" SIGN.

1/5/2007 11:52:44 AM

THE FRAZIER GROUP
DESIGN & DEVELOPMENT SERVICES
5165 DREDGER WAY
ORANGEVALE, CALIFORNIA
95662 (916) 988-8364

TACO BELL
2770 ALUM ROCK
SAN JOSE, CA

THIS DRAWING SHALL NOT BE CONSIDERED WHOLE OR ACCURATE UNTIL SIGNED BY THE ARCHITECT.

CONTRACT DATE: AUG 22 2005	
BUILDING STYLE ML2 REMODEL	
PLAN VERSION:	
SITE NUMBER	
TFG NUMBER	55004
WORK DATE:	9-20-05
ISSUE DATE:	

ELEVATIONS

TACO BELL

EXTERIOR ELEVATIONS

A4.0

NOT USED | G

NOT USED | H

NOT USED | J

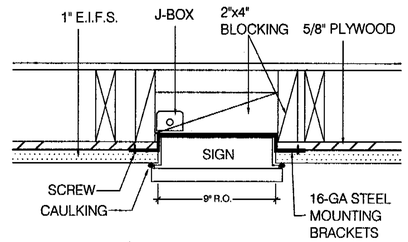

OPEN LATE SIGN PLAN VIEW | 7

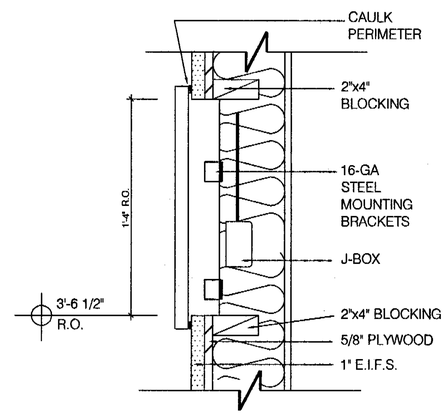

OPEN LATE SIGN SECTION | 8

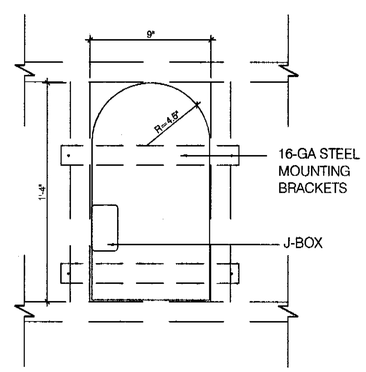

OPEN LATE SIGN ELEVATION | 9

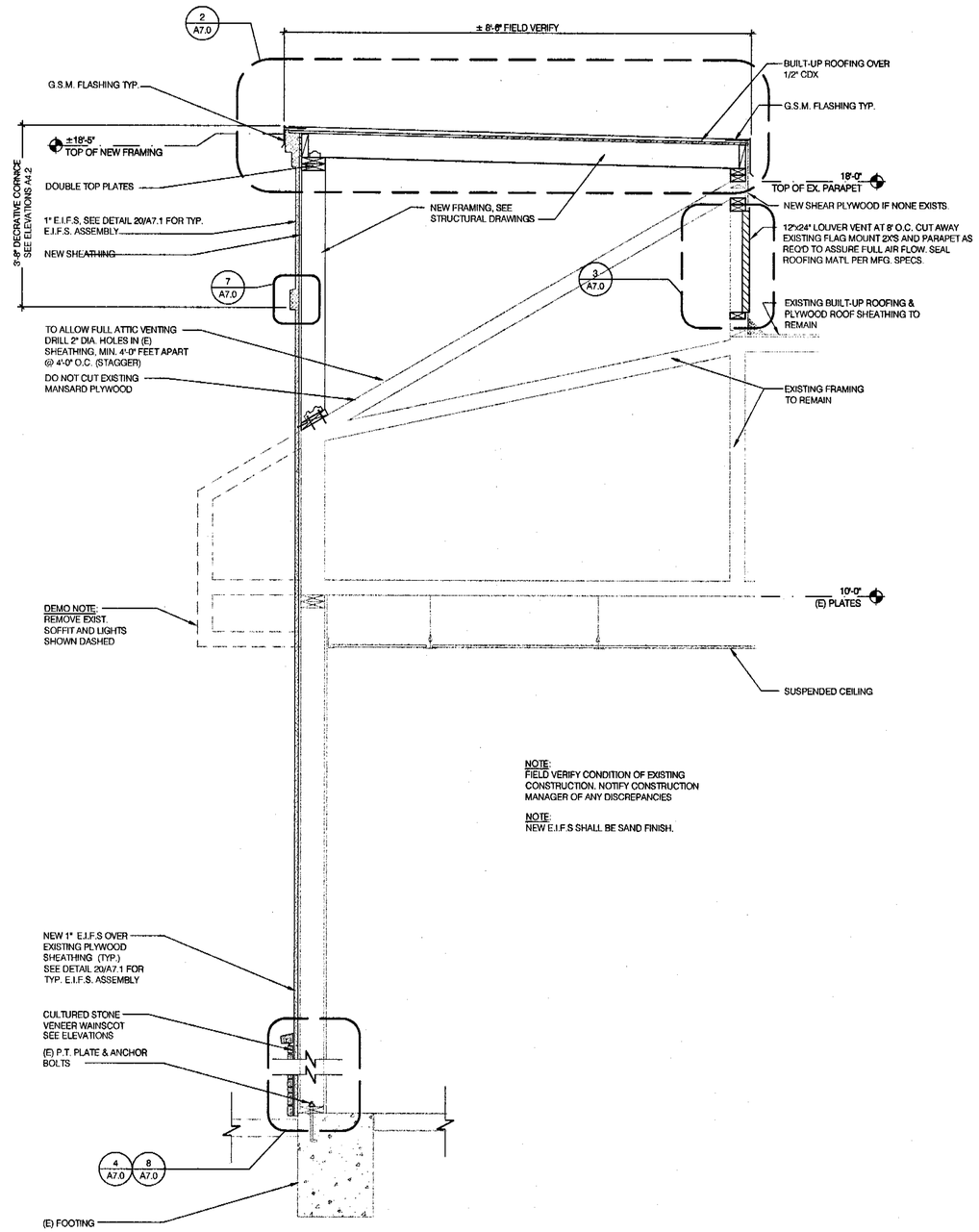

WALL SECTION @ NEW PARAPET (TYP) 3/4"=1'-0" | A

THE FRAZIER GROUP
DESIGN & DEVELOPMENT SERVICES
5165 DREDGER WAY
ORANGEVALE, CALIFORNIA
95662 (916) 988-8364

LICENSED ARCHITECT DAVID SCOTT ANDERSON No. C-29710 Ren. 2-07 STATE OF CALIFORNIA

TACO BELL REMODEL
2770 ALUM ROCK
SAN JOSE, CA

CONTRACT:	8-22-05
BUILDING STYLE:	
PLAN VERSION:	
SITE NO:	
TFG NO:	55004
WORK DT:	11-7-06
ISSUE DT:	

SHEET
EXTERIOR WALL SECTIONS
A6.0

S:\0604-TB Alum Rock_0604_A6.0.dwg Nov 13, 2006 - 4:00pm

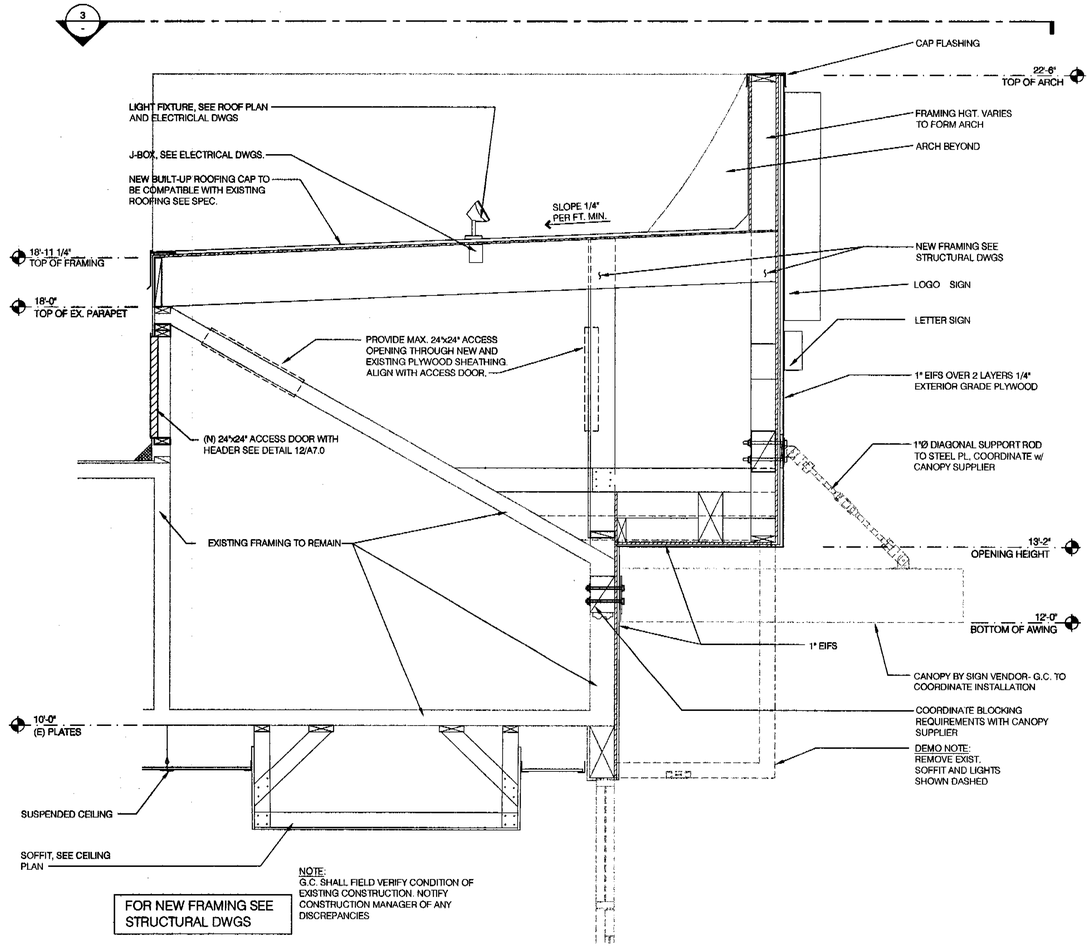

SECTION THRU TACO BELL TOWER 3/4"=1'-0" | 5

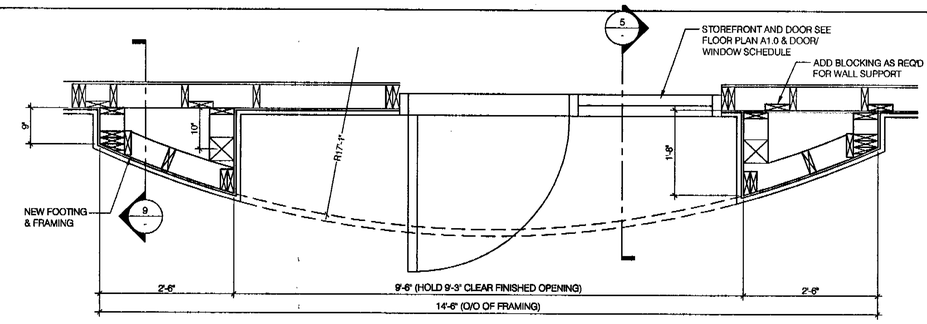

SECTION THRU TACO BELL TOWER AT DOOR LEVEL 3/4"=1'-0" | 1

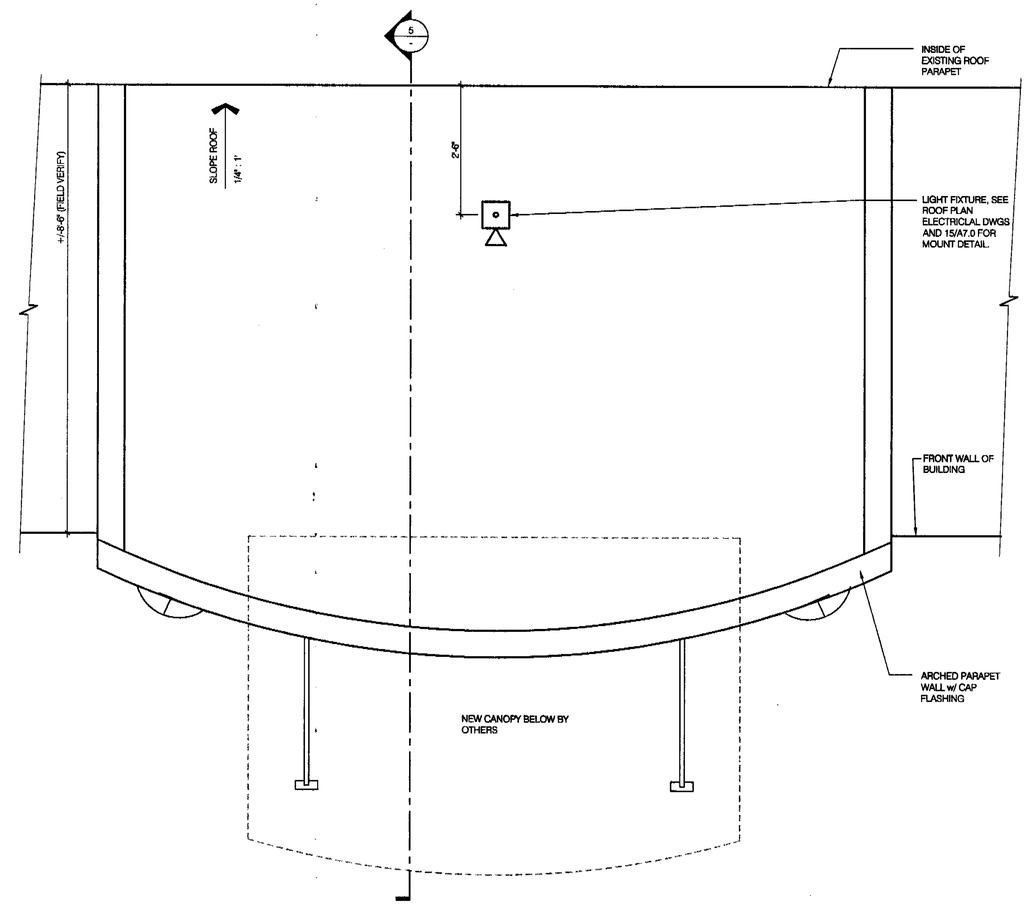

TACO BELL TOWER ROOF PLAN 3/4"=1'-0" | 3

S:\0604-TB Alum Rock_0604_A6.1.dwg Nov 08, 2006 - 10:47am

THE FRAZIER GROUP
DESIGN & DEVELOPMENT SERVICES
5165 DREDGER WAY
ORANGEVALE, CALIFORNIA
95662 (916) 988-8364

LICENSED ARCHITECT
DAVID SCOTT ANDERSON
No. C-29718
Ren. 2-07
STATE OF CALIFORNIA

TACO BELL REMODEL
2770 ALUM ROCK
SAN JOSE, CA

CONTRACT:	8-22-05
BUILDING STYLE:	
PLAN VERSION:	
SITE NO:	
TFG NO:	55004
WORK DT:	11-7-06
ISSUE DT:	

TACO BELL

SHEET

TOWER PLANS & SECTIONS

A6.1

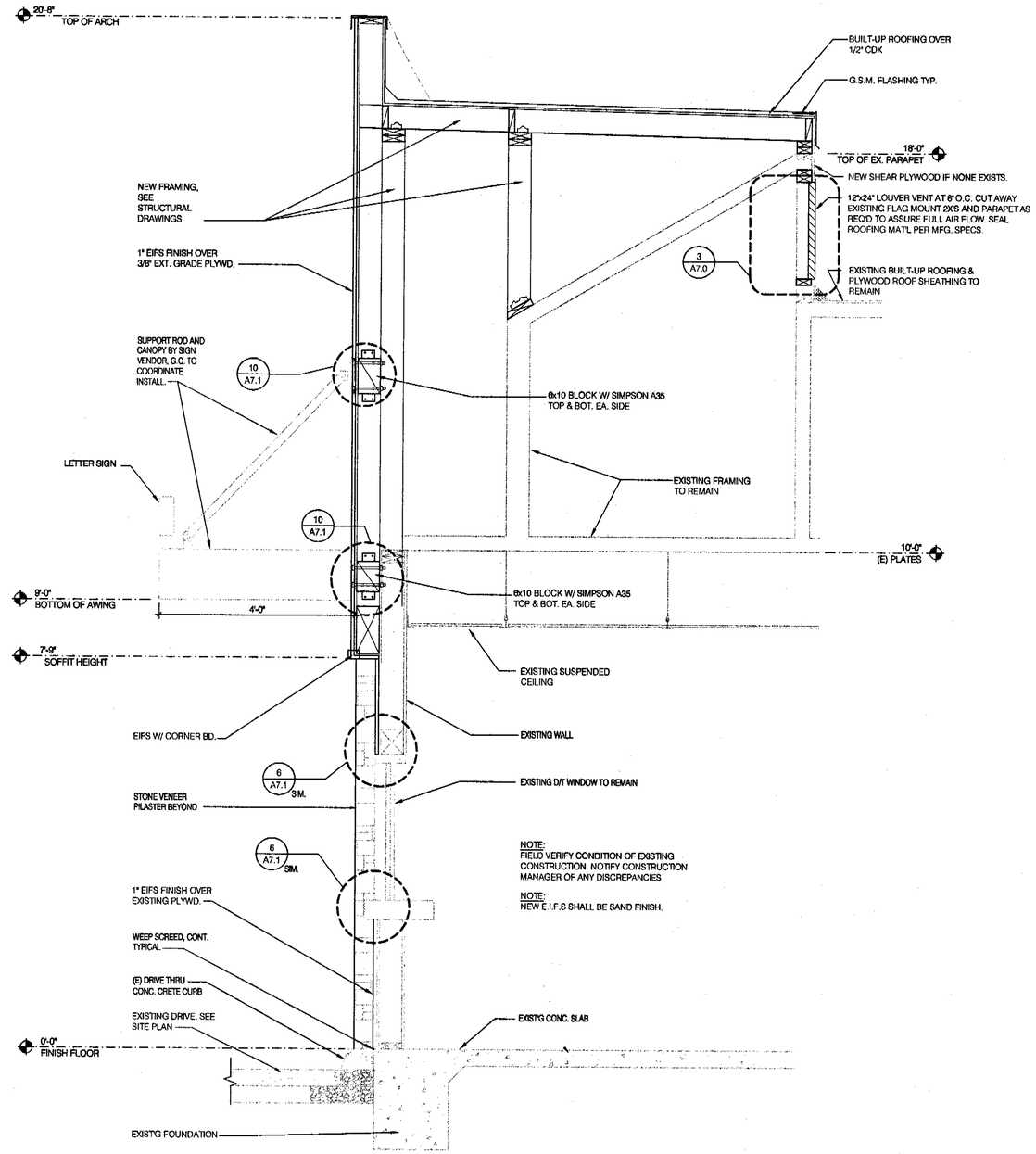

ENGAGED TOWER WALL SECTION AT DRIVE THRU 3/4"=1'-0" | 6

S:\0604-TB Alum Rock_0604_A6.2.dwg Nov 13, 2006 - 4:14pm

THE FRAZIER GROUP
DESIGN & DEVELOPMENT SERVICES
5165 DREDGER WAY
ORANGEVALE, CALIFORNIA
95662 (916) 988-8364

LICENSED ARCHITECT
DAVID SCOTT ANDERSON
No. C-20718
Ren. 2-07
STATE OF CALIFORNIA

TACO BELL REMODEL
2770 ALUM ROCK
SAN JOSE, CA

CONTRACT:	8-22-05
BUILDING STYLE:	
PLAN VERSION:	
SITE NO:	
TFG NO:	55004
WORK DT:	11-7-06
ISSUE DT:	

TACO BELL

SHEET

TOWER PLANS & SECTIONS

A6.2

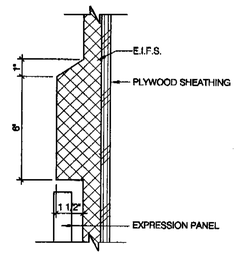

HEAD @ EXPRESSION PANEL 3"=1'-0" | 17

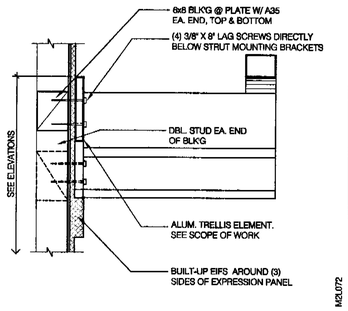

EXP. PANEL TRELLIS SECTION 1"=1'-0" | 13

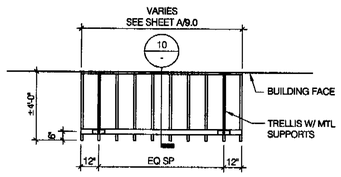

NOTE: PROVIDE BRACE SUPPORTS @ +/- 7'-0" O.C. WHERE TRELLIS IS LONGER THAN SHOWN. SEE PLAN FOR DIMENSIONS. REFER TO SCOPE OF WORK

M2L005

WINDOW TRELLIS PLAN 1/4" = 1'-0" | 9

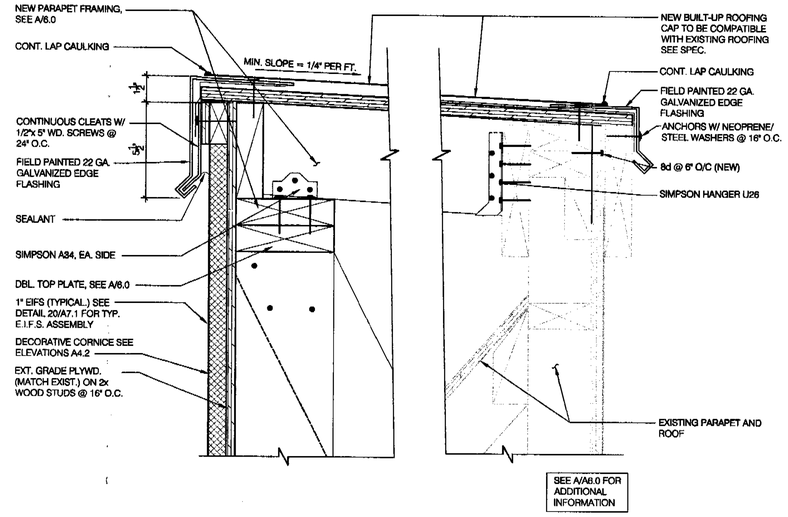

PARAPET CAP 3" = 1'-0" | 2

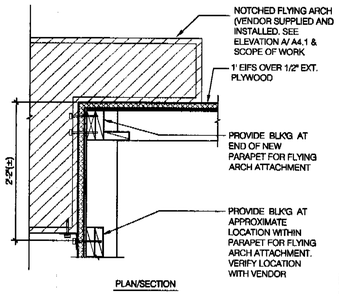

NOTCHED ARCH PLAN/SECTION 1"=1'-0" | 18

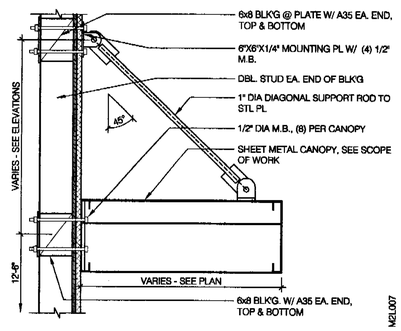

CANOPY SECTION 1" = 1'-0" | 14

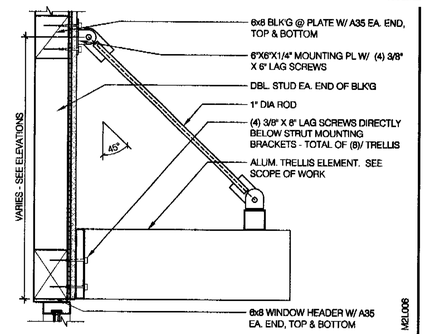

WINDOW TRELLIS SECTION 1" = 1'-0" | 10

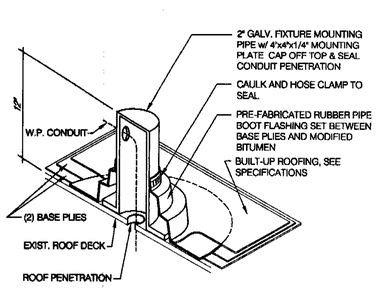

TOWER LIGHT MOUNTING PIPE N.T.S. | 19

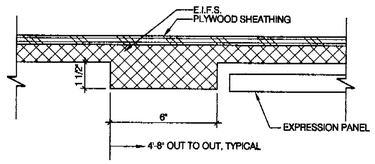

JAMB ABOVE STONE @ EXP. PANEL 3"=1'-0" | 15

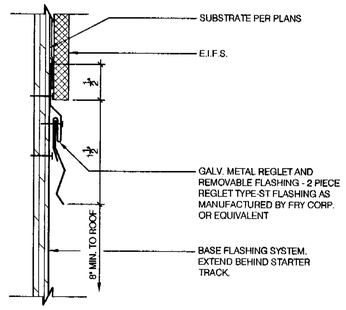

EIFS TO BASE FLASHING N.T.S. | 11

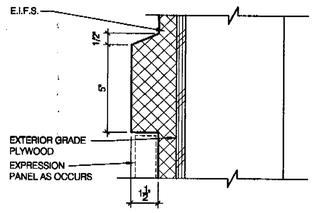

E.I.F.S BAND 3" = 1'-0" | 7

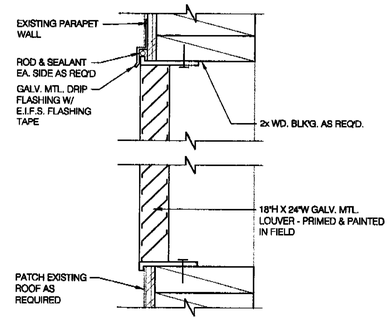

LOUVER DETAIL 3" = 1'-0" | 3

NOT USED | 20

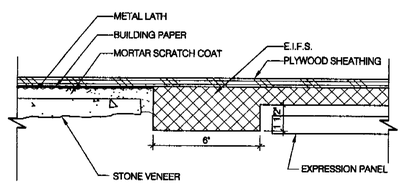

JAMB @ STONE @ EXP. PANEL 3"=1'-0" | 16

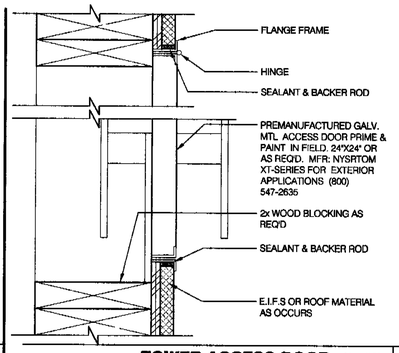

TOWER ACCESS DOOR 3" = 1'-0" | 12

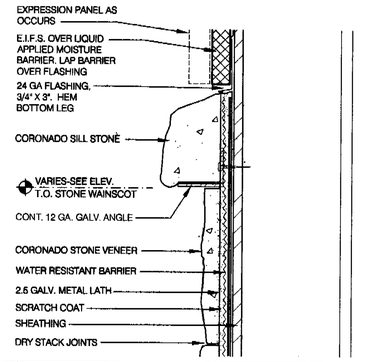

STONE VENEER WAINSCOT 3" = 1'-0" | 8

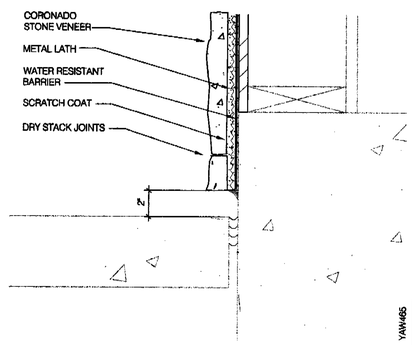

STONE VENEER WAINSCOT 3" = 1'-0" | 4

S:\0604-TB Alum Rock_0604_A7.0.dwg Nov 08, 2006 - 10:49am

THE FRAZIER GROUP
DESIGN & DEVELOPMENT SERVICES

5165 DREDGER WAY
ORANGEVALE, CALIFORNIA
95662 (916) 988-8364

LICENSED ARCHITECT DAVID SCOTT ANDERS No. C-20718 Exp. 12-07 STATE OF CALIFORNIA

TACO BELL REMODEL
2770 ALUM ROCK
SAN JOSE, CA

CONTRACT:	8-22-05
BUILDING STYLE:	
PLAN VERSION:	
SITE NO:	
TFG NO:	55004
WORK DT:	11-7-06
ISSUE DT:	

TACO BELL

SHEET

EXTERIOR DETAILS

A7.0

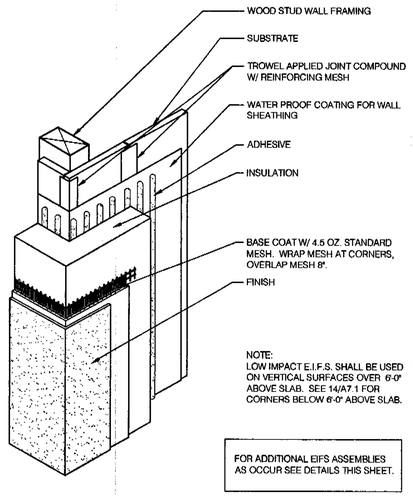

EIFS CORNER LOW-IMPACT N.T.S. **18**

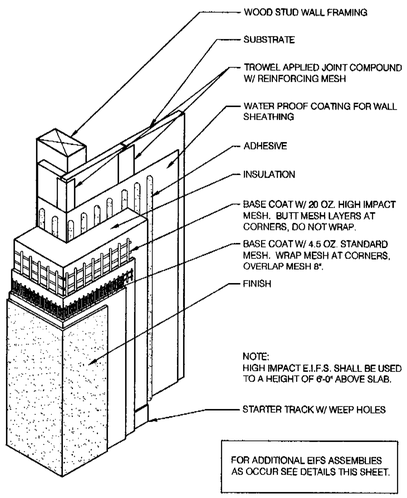

EIFS CORNER HIGH-IMPACT N.T.S. **14**

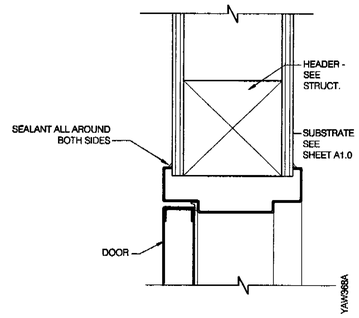

INTERIOR DOOR HEAD / JAMB 3" = 1'-0" **9**

NOT USED **5**

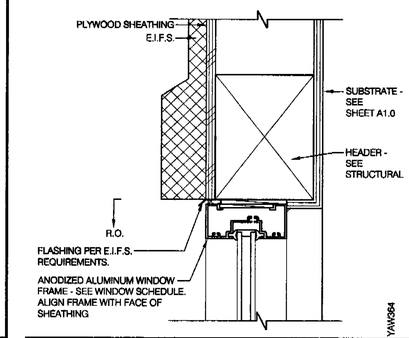

WINDOW HEAD 3" = 1'-0" **1**

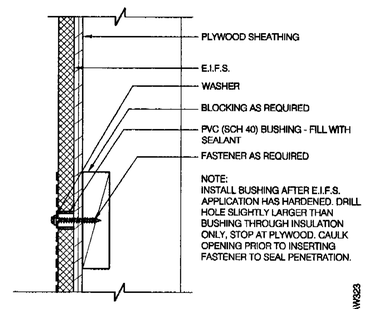

CONNECTION THRU E.I.F.S. 3"=1'-0" **10**

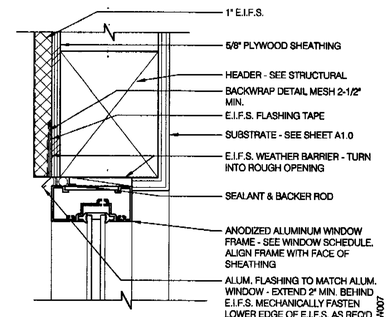

WINDOW HEAD/ JAMB ABV. CHR. RAIL 3" = 1'-0" **6**

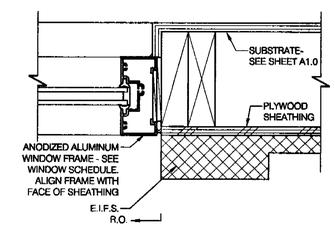

JAMB ABOVE STONE VENEER 3" = 1'-0" **2**

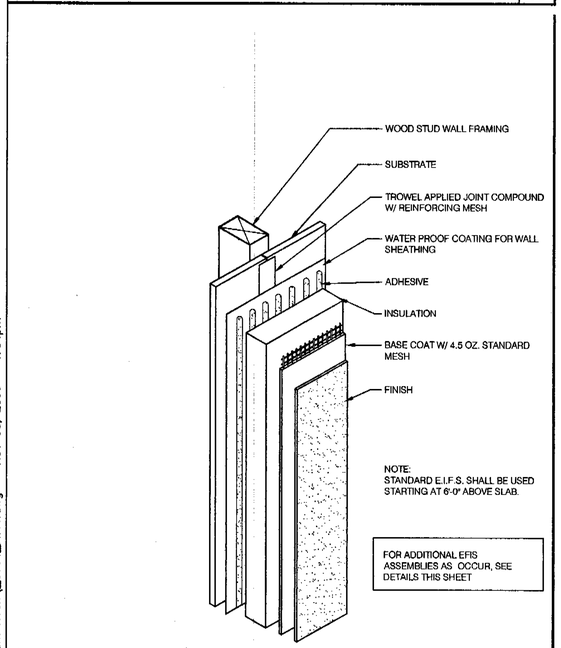

EIFS SYSTEM ISO N.T.S. **20**

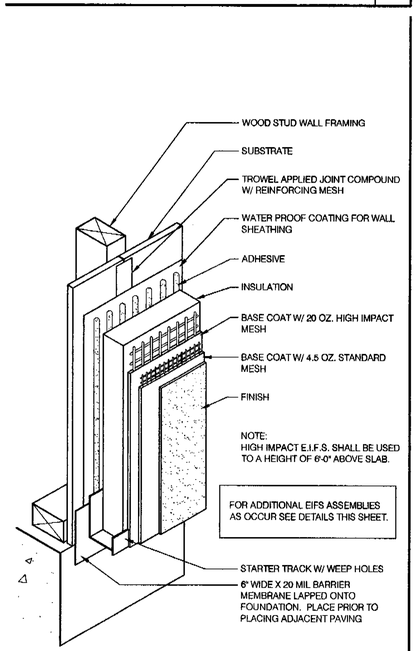

EIFS BASE TERMINATION N.T.S. **16**

NOT USED **11**

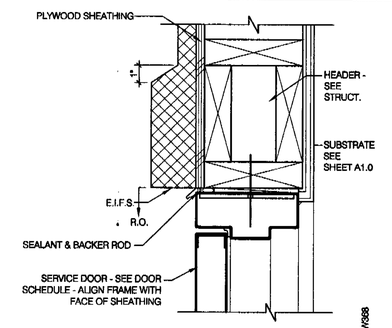

DOOR HEAD/ JAMB 3"=1'-0" **7**

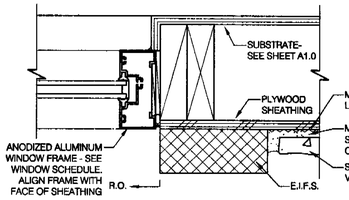

JAMB @ STONE VENEER 3" = 1'-0" **3**

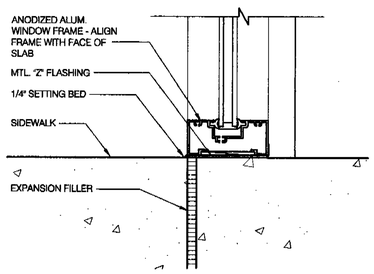

ALUMINUM WINDOW SILL 3" = 1'-0" **12**

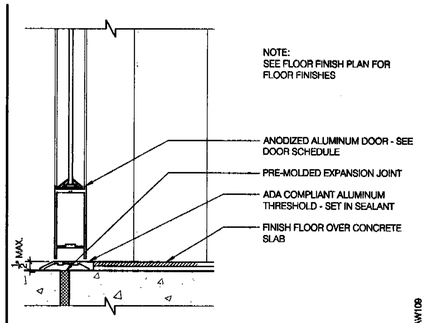

ALUMINUM DOOR THRESHOLD 3"=1'-0" **8**

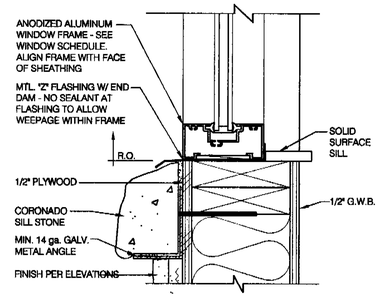

DINING ROOM WINDOW SILL 3" = 1'-0" **4**

THE FRAZIER GROUP
DESIGN & DEVELOPMENT SERVICES
5165 DREDGER WAY
ORANGEVALE, CALIFORNIA
95662 (916) 988-8364

LICENSED ARCHITECT
DAVID SCOTT ANDERSON
No. C-29716
Ren. 2-07
STATE OF CALIFORNIA

TACO BELL REMODEL
2770 ALUM ROCK
SAN JOSE, CA

CONTRACT:	8-22-05
BUILDING STYLE:	
PLAN VERSION:	
SITE NO:	
TFG NO:	55004
WORK DT:	11-7-06
ISSUE DT:	

TACO BELL

SHEET

DETAILS

A7.1

S:\0604-TB Alum Rock_0604_A7.1.dwg Nov 08, 2006 - 1:04pm

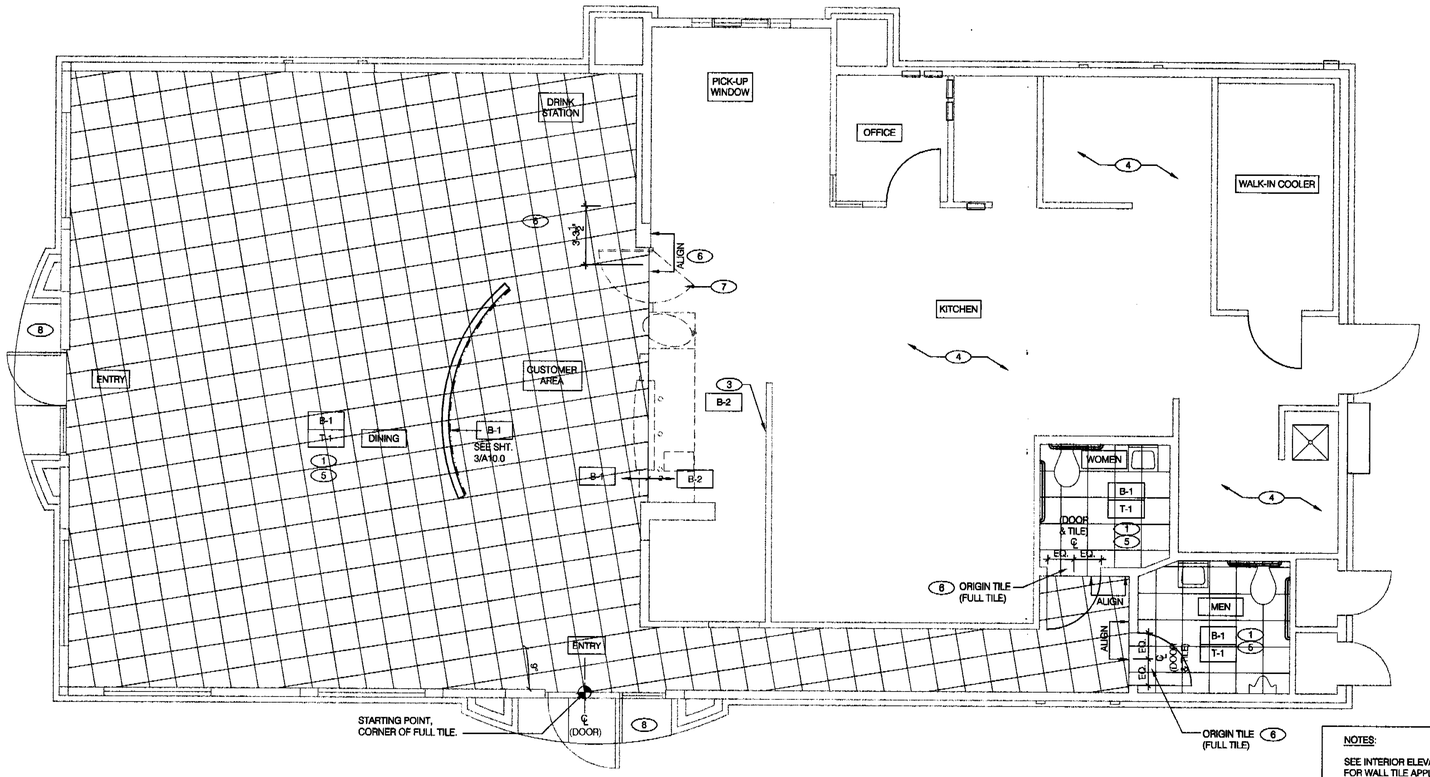

NOTES:

SEE INTERIOR ELEVATIONS, SHEETS A10.0 & A10.1 FOR WALL TILE APPLICATION.

SEE DETAILS 2 & 3/A10.0, FOR BASE AT DIVIDER WALL.

FINISH FLOOR PLAN 1/4"=1'-0" **A**

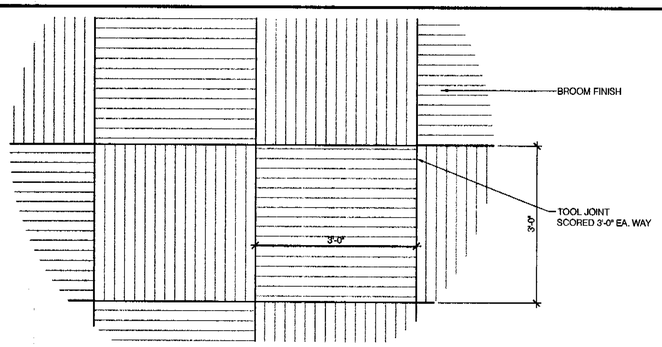

ENLARGED SCORED CONCRETE PATTERN 3/4"=1'-0" **D**

A. SEE INTERIOR ELEVATIONS FOR PAINTING, GYPSUM BOARD AND TILE.

B. ▭ DENOTES FINISH MATERIAL. REFER TO SHT A8.1 FOR FINISHES.

C. TILE JOINTS (U.O.N.):
1. QUARRY FLOOR TILE : 1/4"
2. CERAMIC FLOOR TILE : 3/16"
3. GLAZED WALL TILE : 1/8"
4. BASE, TRIM AND ACCESSORIES : MATCH ADJOINING TILE UNITS

D. PROVIDE BREAK IN TILE TO MATCH-UP WITH EXPANSION & CONTROL JOINTS IN SLAB.

E. ALL BASE TILE SHALL BE SANITARY COVE STYLE WITH 3/8" MIN RADIUS.

F. SEE SCOPE OF WORK SHEETS FOR RESPONSIBILITIES.

H. PROVIDE CLEAR SILICONE CAULK WHERE FRP STOPS AT TOP OF COVE BASE AT NEW CONSTRUCTION.

I. PROVIDE CLEAR SILICONE CAULK WHERE ALL FIXED AND BUILT-IN COUNTERS / EQUIPMENT ABUTS WALL SURFACE.

J. SEE SHEET A1.0 FOR REFERENCES OF INTERIOR ELEVATIONS & ADDITIONAL REQUIREMENTS.

FINISH NOTES **C**

1. NEW FLOOR TILE AND BASE SEE FINISH NOTE 'B'
2. NOT USED.
3. PROVIDE QUARRY BASE TILE @ BEHIND SERVICE COUNTER
4. EXISTING TO REMAIN. PATCH AS REQUIRED TO MATCH EXISTING.
5. PROVIDE SUBSTRATES AS NOTED ON SHEET A1.0.
6. INSTALL NEW TILE EDGE TO BE FLUSH WITH (E) TILE EDGE.
7. PLATFORM FOR SAFE. SEE DETAIL 10/A11.0
8. COLORED CONCRETE BY: SCOFIELD # TO MATCH T-1, BROOM FINISH PER DETAIL D/A8.0.

KEY NOTES **B**

THE FRAZIER GROUP
DESIGN & DEVELOPMENT SERVICES
5165 DREDGER WAY
ORANGEVALE, CALIFORNIA
95662 (916) 988-8364

LICENSED ARCHITECT DAVID SCOTT ANDERSON No. C-29718 Ren. 2-07 STATE OF CALIFORNIA

TACO BELL REMODEL
2770 ALUM ROCK
SAN JOSE, CA

CONTRACT:	8-22-05
BUILDING STYLE:	
PLAN VERSION:	
SITE NO:	
TFG NO:	55004
WORK DT:	11-7-06
ISSUE DT:	

TACO BELL

SHEET

FLOOR FINISH PLAN

A8.0

S:\0604-TB Alum Rock_0604_A8.0.dwg Nov 08, 2006 - 10:53am

FLOORS

SYM	DESCRIPTION	ALTERNATE
T-1	MFR.: DAL TILE TYPE: TERRA ANTIQUA CERAMIC TILE COLOR: ROSSO TA-02 SIZE: 18"x18" GROUT: CUSTOM #95 SABLE BROWN	
T-2	MFR.: DAL TILE TYPE: TERRA ANTIQUA CERAMIC TILE COLOR: ROSSO TA-02 SIZE: 6"x6" GROUT: CUSTOM #95 SABLE BROWN	

WALL BASE

SYM	DESCRIPTION	ALTERNATE
B-1	MFR.: DAL TILE TYPE: TERRA ANTIQUA CERAMIC TILE COLOR: ROSSO TA-02 SIZE: 6"x12" COVED BASE GROUT: CUSTOM #95 SABLE BROWN	
B-2	MATCH EXISTING B.O.H. COVE BASE TILE.	

1. WHERE NOTED INSTALL FRP PANELS ON WALLS FROM TOP OF TILE BASE TO BOTTOM OF CEILING GRID EXCEPT WHERE CERAMIC TILE IS INDICATED. INSTALL FRP ON KITCHEN SIDE OF SERVING COUNTER WALL.
2. NOT USED.
3. REFER TO INTERIOR ELEVATIONS FOR LOCATIONS OF TILE AND FRP.
4. FOR FINISH LOCATIONS REFER TO:
   SHEETS A4.0 & A4.1 - EXTERIOR ELEVATIONS
   SHEET A8.0 - FLOOR FINISH PLAN
   SHEET A9.0 - REFLECTED CEILING PLAN
   SHEETS A10.0 TO A10.1 - INTERIOR ELEVATIONS
5. ALL INTERIOR FINISHES SHALL HAVE CLASS 1 FIRE RATING.

ROOM FINISH NOTES 20

WALLS

SYM	DESCRIPTION	ALTERNATE
P-1	MFR.: SHERWIN WILLIAMS TYPE: SATIN / EGGSHELL LATEX COLOR: SW7069 IRON ORE (DK. GREY) PRIMER: #023 (WHITE) FRESH START 100% ACRYLIC (PAINT FOR CL-1)	
P-2	MFR.: SHERWIN WILLIAMS TYPE: SATIN / EGGSHELL LATEX COLOR: SW6657 "AMBER WAVE" PRIMER: #023 (WHITE) FRESH START 100% ACRYLIC (ORANGE)	P-2 MFR.: SHERWIN WILLIAMS TYPE: SEMI-GLOSS LATEX COLOR: SW6657 "AMBER WAVE" LOCATION: RESTROOMS
P-3	MFR.: SHERWIN WILLIAMS TYPE: SATIN / EGGSHELL LATEX COLOR: SW6510 "LOYAL BLUE" PRIMER: #023 (WHITE) FRESH START 100% ACRYLIC (BLUE)	
P-4	MFR.: SHERWIN WILLIAMS TYPE: SATIN / EGGSHELL LATEX COLOR: SW6431 "LEAP FROG" PRIMER: #023 (WHITE) FRESH START 100% ACRYLIC (GREEN)	
P-5	MFR.: SHERWIN WILLIAMS TYPE: SATIN / EGGSHELL LATEX COLOR: SW6839 "KIMONO" PRIMER: #023 (WHITE) FRESH START 100% ACRYLIC (PURPLE)	
P-6	MFR.: SHERWIN WILLIAMS TYPE: SATIN / EGGSHELL ENAMEL COLOR: SW6689 "YARROW" PRIMER: #023 (WHITE) FRESH START 100% ACRYLIC (YELLOW)	
S-1	MFR.: CORIAN TYPE: CLASSICS COLOR: PESTO MIST #309	
S-2	MFR.: CORIAN TYPE: SIGNATURES COLOR: COPPER ARTIFACTS #801	
TM-1	MFR.: MILLWORK TYPE: CHAIR RAIL COLOR: STAINED TO MATCH DALEY'S #45 WOOD STAIN 1 x 2 SOLID MAPLE	
WT-1	MFR.: EUROWEST TYPE: CERAMIC TILE # 02750004 COLOR: CRYSTAL SERIES, SOLE (YELLOW) SIZE: 4"x4", ON 45° ANGLE GROUT: CUSTOM #22 SAHARA TAN	WT-1 MFR.: DAL TILE TYPE: SEMI GLOSS CERAMIC COLOR: GLOSS MUSTARD SIZE: 4.25" x 4.25", ON 45° ANGLE GROUT: CUSTOM #22 SAHARA TAN
WT-2	MFR.: DAL TILE TYPE: SONTERRA COLLECTION GLASS MOSAICS COLOR: OPALIZED GROUP 3, TERRA COTTA SR56 SIZE: 1"x1" GROUT: CUSTOM #95 SABLE BROWN	
WT-3	MFR.: DAL TILE TYPE: TERRA ANTIQUA CERAMIC TILE COLOR: ROSSO TA-02 SIZE: 12"x12" GROUT: CUSTOM #95 SABLE BROWN	
WT-4	MFR.: DAL TILE TYPE: TERRA ANTIQUA CERAMIC TILE COLOR: ROSSO TA-02 SIZE: 6"x12" COVED BASE GROUT: CUSTOM #95 SABLE BROWN	MFR.: TYPE: COLOR: NOTE: CUT IN HALF HORIZ. TO FORM TOP & BOTTOM TRIM, BULLNOSE EDGE @ TOP
WT-5	MFR.: DAL TILE TYPE: AMBER COLOR: OF07 SIZE: 6"x 6" GROUT: CUSTOM #22 SAHARA TAN	

DALTILE
LESLIE S. LIKINS
502-637-2750
LESLIE.LIKINS@DALTILE.COM

MARLITE
DAN EGBERS
330-343-6621
WWW.MARLITE.COM

WILSONART INTERNATIONAL, INC.
KEVIN GEIJER
254-207-2071

SHERWIN WILLIAMS
BELINDA SIPOS
317-594-0083

FORBO
DONNA YOUNG-KERN
800-342-0604 EXT. 441
FAX: 1-614-734-1994
DYOUNG@FL-NA.COM

EUROWEST
2200 S. DUPONT DR.
ANAHEIM, CA 92806
714-937-7500

NATIONAL METAL SHAPES
RUSSEL DAY
800-837-9559

CONTACTS C

WALLS (LAMINATES)

SYM	DESCRIPTION	ALTERNATE / NOTE
WC-1	MFR.: TYPE: MARMOLEUM COLOR: 3825 AFRICAN DESERT (FRESCO)	ANODIZED CORNER GUARDS AND J MOLDS BY NATIONAL METAL SHAPES, DARK BRONZE
WC-2	MFR.: TYPE: MARMOLEUM COLOR: 3030 BLUE (REAL)	ANODIZED CORNER GUARDS AND J MOLDS BY NATIONAL METAL SHAPES, DARK BRONZE

CEILINGS

SYM	DESCRIPTION	ALTERNATE
CL-1	MFR.: ARMSTRONG TYPE: COLOR READY FINE FISSURED COLOR: TECH BLACK (24"x24") GRID: ARMSTRONG PRELUDE XL GRID COLOR: WHITE (SEE NOTE)- 15/16" EXPOSED TEE SYSTEM	NOTE: GRID, VENTS, SPEAKERS TO BE PAINTED IN FIELD: SHERWIN WILLIAMS SATIN/EGGSHELL #SW7069 IRON ORE (DK GREY)
CL-2	MFR.: USG TYPE: VINYL FACED, STIPPLE SHELL FIRECODE COLOR: WHITE GRID: USG INT. INC. BY DONN #272606-ZXA GRID COLOR: FLAT WHITE #050	
CL-3	MFR.: TYPE: GYPSUM BOARD COLOR:	

DOORS

SYM	DESCRIPTION	ALTERNATE
DL-1	MFR.: NEVAMAR TYPE: WM-8-350T COLOR: CARMEL SAGAWOOD	

METAL FRAMES

SYM	DESCRIPTION	ALTERNATE
MF-1	MFR.: TYPE: GLOSS FINISH COLOR: "DARK BRONZE" TO MATCH SHERWIN WILLIAMS ENAMEL BRONZE TONE CUSTOM COLORS: "SEAL BROWN"	

ROOM FINISH SCHEDULE LEGEND 4

S:\0604-TB Alum Rock_0604_A8.1.dwg Nov 08, 2006 - 10:53am

THE FRAZIER GROUP
DESIGN & DEVELOPMENT SERVICES

5165 DREDGER WAY
ORANGEVALE, CALIFORNIA
95662 (916) 985-8364

LICENSED ARCHITECT
DAVID SCOTT ANDERSON
No. C-29718
Ren. 2-0
STATE OF CALIFORNIA

TACO BELL REMODEL
2770 ALUM ROCK
SAN JOSE, CA

CONTRACT:	8-22-05
BUILDING STYLE:	
PLAN VERSION:	
SITE NO:	
TFG NO:	55004
WORK DT:	11-7-06
ISSUE DT:	

TACO BELL

SHEET
FINISH SCHEDULES
A8.1

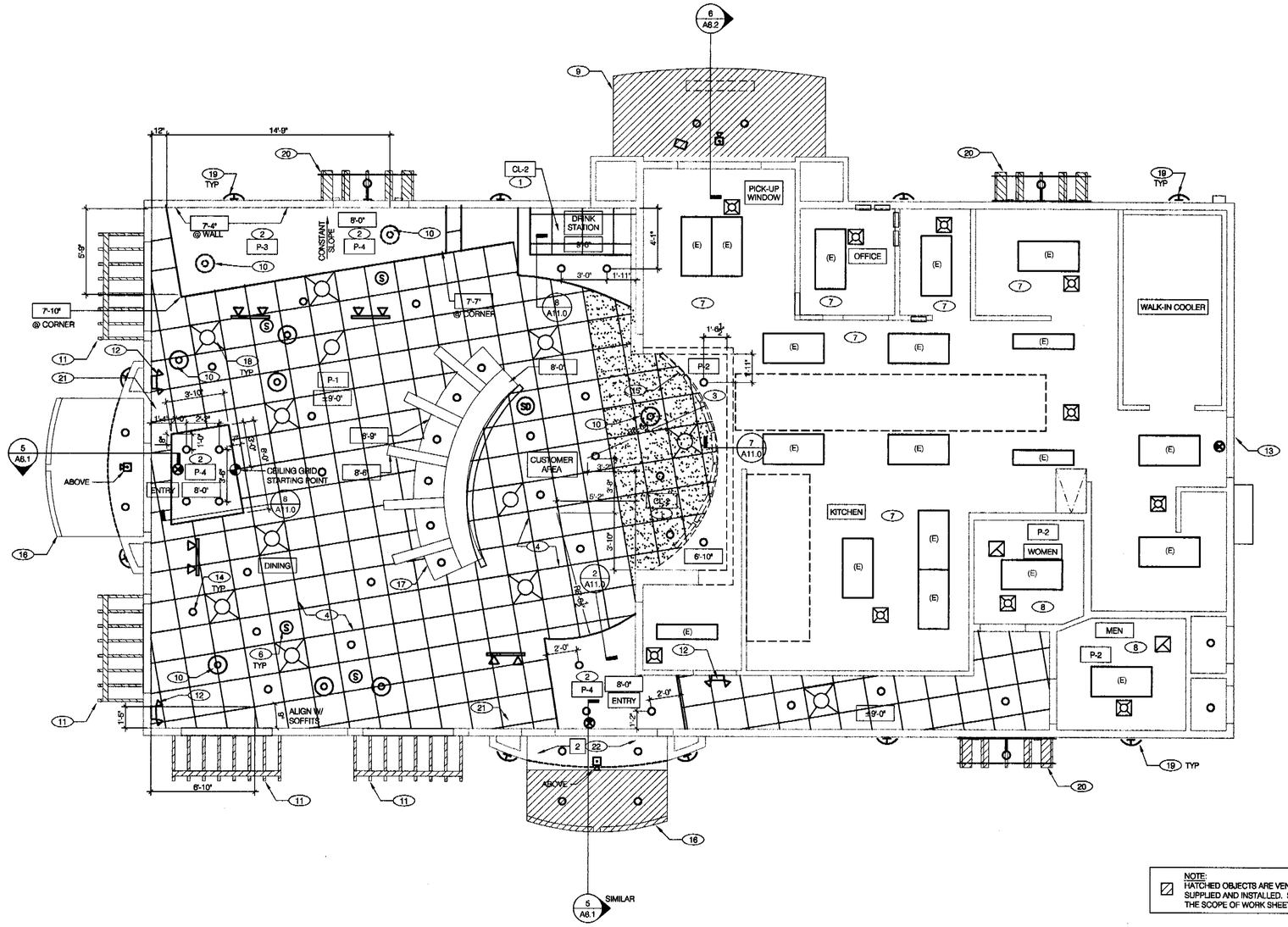

NOTE:
HATCHED OBJECTS ARE VENDOR SUPPLIED AND INSTALLED. SEE THE SCOPE OF WORK SHEETS.

REFLECTED CEILING PLAN 1/4"=1'-0" **A**

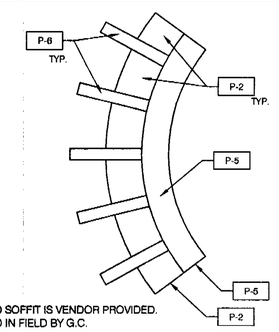

CURVED SOFFIT IS VENDOR PROVIDED.
PAINTED IN FIELD BY G.C.

CURVED SOFFIT 1/4"=1'-0" **F**

SEE ELECTRICAL DRAWINGS FOR FIXTURE SCHEDULE & SPECS.

- 2'-0" x 4'-0" FLUORESCENT LIGHT FIXTURE
- 2'-0" x 2'-0" FLUORESCENT LIGHT FIXTURE
- DOWNLIGHT @ WALK-IN (BY WALK-IN MFR.)
- PENDANT FIXTURE
- DOWNLIGHT
- EMERGENCY LIGHTS
- EXIT LIGHT (WALL MOUNTED)
- EXIT LIGHT (CEILING MOUNTED)
- PENDANT OR DIRECTIONAL FIXTURE, TRACK MOUNTED
- GOOSE NECK LIGHT
- EXTERIOR WALL FIXTURE
- WALL SCONCE
- SPEAKER
- 12" EXHAUST FAN
- HVAC RETURN GRILLE SEE KEYNOTE #18
- HVAC SUPPLY DIFFUSER SEE KEYNOTE #18
- SD SMOKE DETECTOR

CEILING SYMBOL LEGEND **E**

DIMENSIONS:
A. ALL DIMENSIONS ARE TO FACE OF FINISH U.O.N.

CEILING FINISHES:
A. [ ] DENOTES FINISH MATERIAL. REFER TO SHEET A8.1 FOR CEILING FINISHES.
B. [ ] DENOTES EXTERIOR FINISH. REFER TO SHEET A4.0 FOR EXTERIOR FINISHES.

SUSPENDED CEILING:
A. ACOUSTICAL PANEL INSTALLATION: INSTALL ACOUSTICAL PANELS WITH EDGES IN CLOSE CONTACT WITH METAL SUPPORTS AND IN TRUE ALIGNMENT.
B. ALLOWABLE VARIATIONS FROM FLAT AND LEVEL SURFACE: 1/8" IN 10'-0" MAX.
C. ALLOWABLE VARIATIONS FROM PLUMB OF GRID MEMBERS: AS CAUSED BY ECCENTRIC LOADS, 2" MAX.
D. INSTALL SYSTEM AFTER MAJOR ABOVE CLG. WORK IS COMPLETE. COORD LOCATIONS OF HANGERS WITH RELATED WORK.
E. SEE SPECS FOR ADDITIONAL INFORMATION.

GYPSUM BOARD CEILING:
A. SUBSTRATE SHALL BE 5/8" THICK TYPE "X" GYP BD.
B. ACOUSTICAL SEALANT: APPLY TO GYP. BD. PANELS AS INDICATED IN SPECS. GYP. BD. FINISHING AND DECORATING: REFER TO DWGS FOR TEXTURE AND FINISHES.

ELECTRICAL:
A. SEE ELECT. DWGS. FOR FIXTURE SCHED. & SPECS.

MECHANICAL:
A. RELOCATE DINING ROOM A/C DIFFUSERS AS NEEDED, TO ACCOMODATE THE NEW CEILING LAYOUT.

DECOR:
A. REFER TO INTERIOR ELEVATIONS A10.0 & A10.1 FOR FINISH MATERIALS AND COLORS.

ALTERNATE:
A. ALTERNATE SOFFIT FRAMING METAL STUDS IN LIEU OF WOOD FRAME WILL BE ACCEPTED.

REFLECTED CEILING PLAN NOTES **D**

1. SUSPENDED CEILING TILE & GRID [CL-2] SEE A8.1
2. NEW GYPSUM BOARD ACCENT SOFFIT. SEE DETAILS NOTED ON RCP
3. NEW GYPSUM BOARD SOFFIT AT SERVICE AREA. SEE ENLARGED PLAN 4/A11.0 & DETAIL 7/A11.0
4. SUSPENDED CEILING TILE & GRID [CL-1] SEE A8.1
5. NOT USED
6. (E) SPEAKERS & SMOKE DETECTORS TO BE REINSTALLED. ADJUST LOCATION AS REQUIRED TO ACCOMMODATE NEW SOFFITS & CEILING HTS. (TYPICAL)
7. (E) SUSPENDED GYP. BD. CEILING TO REMAIN. SECURE, LEVEL, STRAIGHTEN AND PAINT KITCHEN CEILING.
8. (E) GYPSUM BOARD CEILING TO REMAIN. PATCH, REPAIR AND PAINT. IF ACOUSTIC CEILING EXISTS @ RESTROOMS, REMOVE & PROVIDE HARDLID GYPSUM BOARD CEILING & PAINT
9. NEW CANOPY W/ DOWNLIGHTS. SEE DETAIL 14/A7.0 & REFER TO SCOPE OF WORK
10. NEW PENDANT LIGHTING CENTER OVER TABLE TOP. SEE A2.1 FOR TABLE LAYOUT
11. NEW TRELLIS PROVIDED. SEE DETAILS 9 & 10/A7.0, REFER TO SCOPE OF WORK
12. REINSTALL EMERGENCY LIGHTING, SECURITY CAMERAS / EQUIPMENT. SEE 19/A11.0 FOR MONITOR CEILING BRACKET
13. EXISTING EXTERIOR LIGHT FIXTURE TO REMAIN
14. CENTER CAN LIGHTS @ SUSPENDED CEILING ON TILE U.N.O.
15. MENU BOARD. REFER TO SCOPE OF WORK
16. TOWER CANOPY W/ DOWNLIGHT. SEE DETAILS 5/A6.1 & 14/A7.0 & REFER TO SCOPE OF WORK
17. RADIUS SOFFIT, SEE DETAIL F THIS SHEET FOR FINISH APPLICATION. CENTER OVER RADIUS WALL BELOW. SEE SEATING PLAN A2.1 FOR CENTER LINE DIMENSION & REFER TO SCOPE OF WORK
18. PROVIDE & INSTALL REPLACEMENT METALAIRE SERIES 5800A-G SERIES OR EQUAL DIFFUSERS AND RETURN AIR GRILLES . MODIFY EXISTING DUCTWORK TO ACCOMMODATE NEW CEILING HEIGHTS. PAINT IN FIELD: SHERWIN WILLAIMANS SATIN/ EGGSHELL #SW7069 IRON ORE (DARK GREY).
19. WALL SCONCE. SEE ELEV. FOR MOUNTING HEIGHT OF FIXTURE. PROVIDE UL LISTED FOR WET LOCATION W/ DECORATIVE SHROUD.
20. EXPRESSION PANEL TRELLIS BY OTHERS.
21. STEEL TUBE AND WOOD PANEL DINING ROOM SCREEN
22. EXTERIOR FINISH [2] . SEE SHEET A4.0 FOR EXTERIOR FINISH SCHEDULE.
23. CENTER PENDANT LIGHT FIXTURE OVER COUNTER OVAL. REFER TO DECOR PLANS FOR SERVICE COUNTER LOCATION.
24. CENTER PENDANT LIGHT FIXTURE OVER CONDIMENT COUNTER. REFER TO DECOR PLANS FOR CORRECT LOCATION.

KEY NOTES **B**

THE FRAZIER GROUP
DESIGN & DEVELOPMENT SERVICES
5165 DREDGER WAY
ORANGEVALE, CALIFORNIA
95662 (916) 988-8364

LICENSED ARCHITECT
DAVID SCOTT ANDERS
No. C-29716
Ren. 2-07
STATE OF CALIFORNIA

TACO BELL REMODEL
2770 ALUM ROCK
SAN JOSE, CA

CONTRACT:	8-22-05
BUILDING STYLE:	
PLAN VERSION:	
SITE NO:	
TFG NO:	55004
WORK DT:	11-7-06
ISSUE DT:	

SHEET
REFLECTED CEILING PLAN
A9.0

S:\0604-TB Alum Rock_0604_A9.0.dwg Nov 08, 2006 - 10:54am

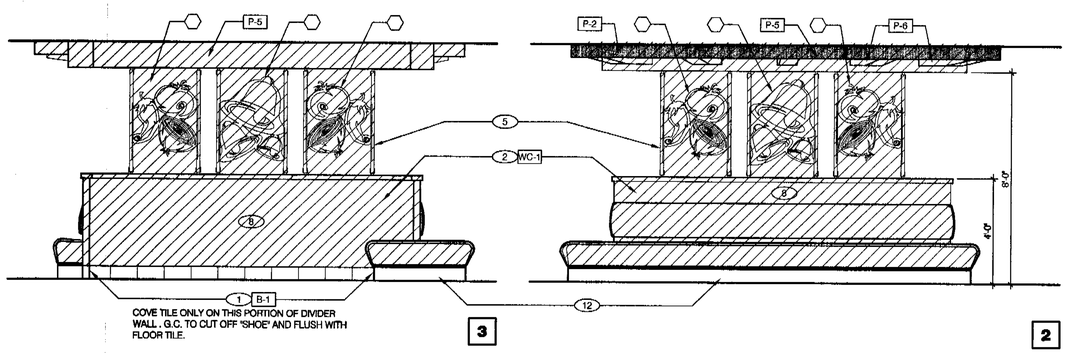

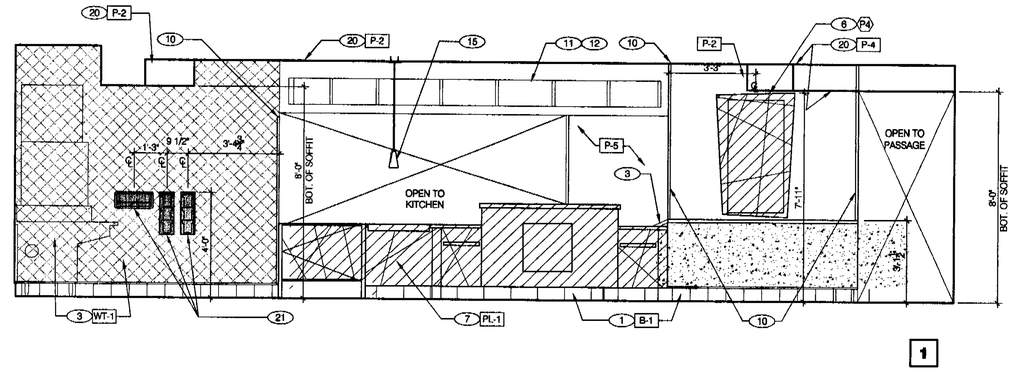

DINING 3/8" = 1'-0"

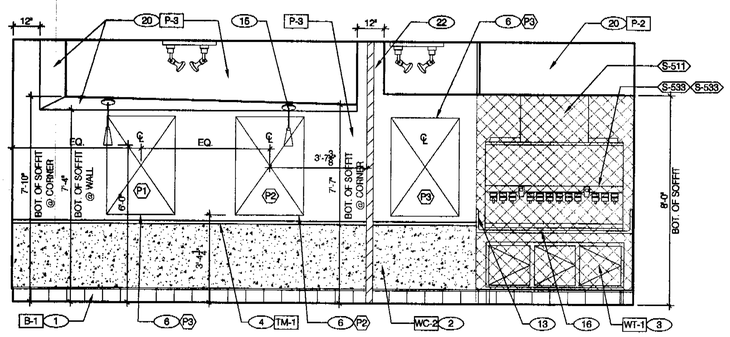

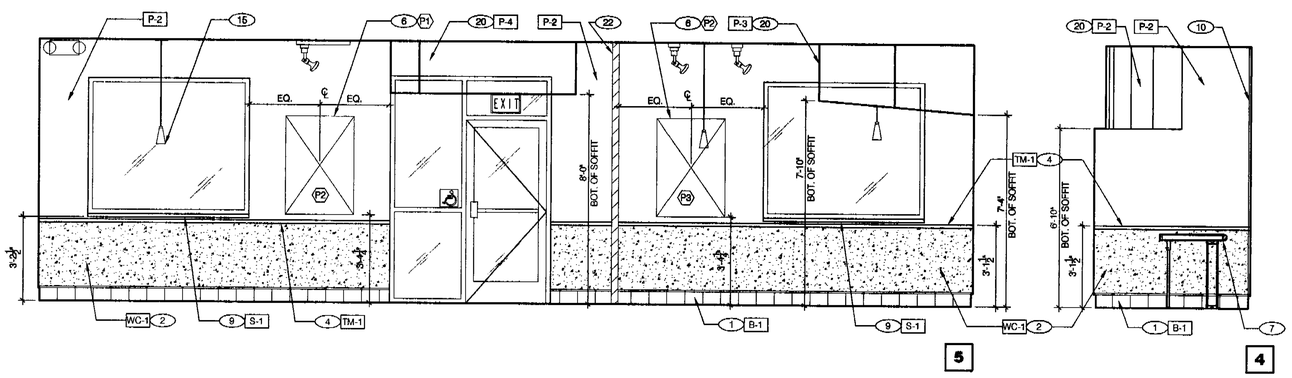

DINING 3/8" = 1'-0"

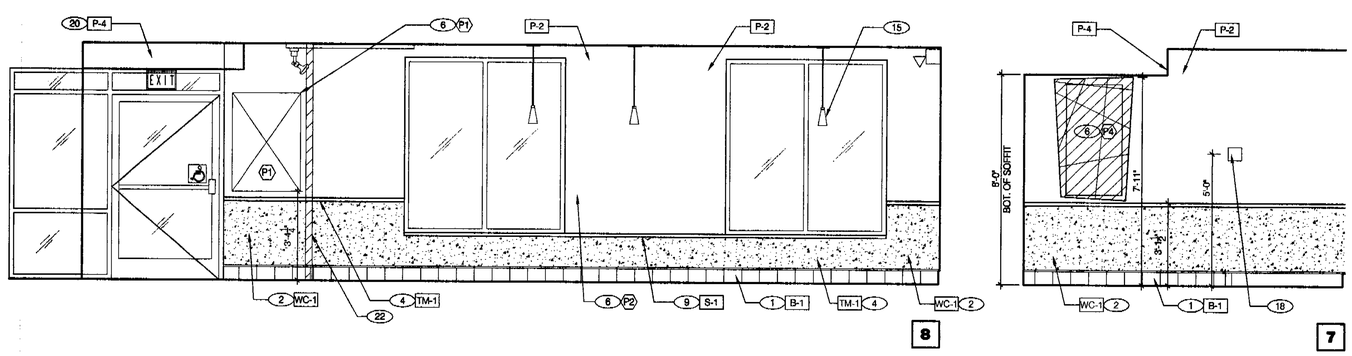

DINING 3/8" = 1'-0"

1. DENOTES KITCHEN EQUIPMENT ITEM. REFER TO SHEET A2.0
2. REFER TO "FLOOR PLAN NOTES," SHEET A1, FOR SUBSTRATE NOTES.
3. DENOTES FINISH MATERIAL. REFER TO SHEET A8.1 FOR FINISH SCHEDULE.
4. NOT USED
5. SEE DETAIL A/A10.1 FOR ENLARGED TOILET ROOM PLAN W/ DIMENSIONS.
6. DENOTES TOILET ROOM ACCESSORIES. SEE SHEET A10.1
7. DENOTES ARTWORK. SEE SHEET A2.1

HATCHED OBJECTS INDICATE VENDOR DECOR ITEMS. SEE SCOPE OF WORK.

HATCHED OBJECTS INDICATE VENDOR DECOR ITEMS. SEE SCOPE OF WORK.

1. COVE TILE. SEE DETAIL 16/A11.0 AND SHEET A8.0.
2. WAINSCOT, TYPICAL. SEE 15 & 16/A11.0.
3. CERAMIC TILE. PROVIDE 5/8" CEMENTITIOUS BOARD SUBSTRATE BEHIND NEW TILES, TYP. SEE DETAIL D/A10.1.
4. CHAIR RAIL. SEE DETAIL 15/A11.0.
5. (POP LADDER) SEATING/DECOR ITEM. REFER TO SCOPE OF WORK
6. SEE ARTWORK SCHEDULE SHEET A2.1 FOR DESCRIPTION AND PLAN LOCATION.
7. SERVING COUNTER. REFER TO SHEET A2.1.
8. RADIUS DIVIDER WALL. REFER TO SCOPE OF WORK.
9. SOLID SURFACE WINDOW SILL. SEE DETAIL 4/A7.1.
10. 1/2" X 1/2" STAINLESS STEEL CORNER GUARD.
11. MENU BOARD.
12. MARMOLEUM COVE SUPPLIED BY SEATING VENDOR.
13. STAINLESS STEEL SPLASH GUARD.
14. NOT USED
15. PENDANT LIGHT. SEE REFLECTED CEILING PLAN AND ELECTRICAL DRAWINGS.
16. DRINK STATION.
17. NEW DOOR. SEE DOOR SCHEDULE.
18. BRAILLE SIGN.
19. NOT USED
20. GYP. BD. SOFFIT. SEE REFLECTED CEILING PLAN.
21. RECESSED STRAW AND LID HOLDERS. FRAME INTO FURRED WALL AS REQUIRED. DO NOT PENETRATE EXISTING SHEAR PLYWOOD. SEE SHEET A2.0.
22. DINING ROOM SCREEN BY DECOR VENDOR.

KEY NOTES A

THE FRAZIER GROUP
DESIGN & DEVELOPMENT SERVICES
5165 DREDGER WAY
ORANGEVALE, CALIFORNIA
95662 (916) 988-8364

LICENSED ARCHITECT DAVID SCOTT ANDERSON No. C-29718 Ren. 2-07 STATE OF CALIFORNIA

TACO BELL REMODEL
2770 ALUM ROCK
SAN JOSE, CA

CONTRACT:	8-22-05
BUILDING STYLE:	
PLAN VERSION:	
SITE NO:	
TFG NO:	55004
WORK DT:	11-7-06
ISSUE DT:	

TACO BELL

SHEET

INTERIOR ELEVATIONS DINING ROOM

A10.0

S:\0604-TB Alum Rock_0604_A10.0.dwg Nov 08, 2006 - 10:55am

NOTE:
FOR WALL ACCENT TILE PATTERN
SEE E/A10.1

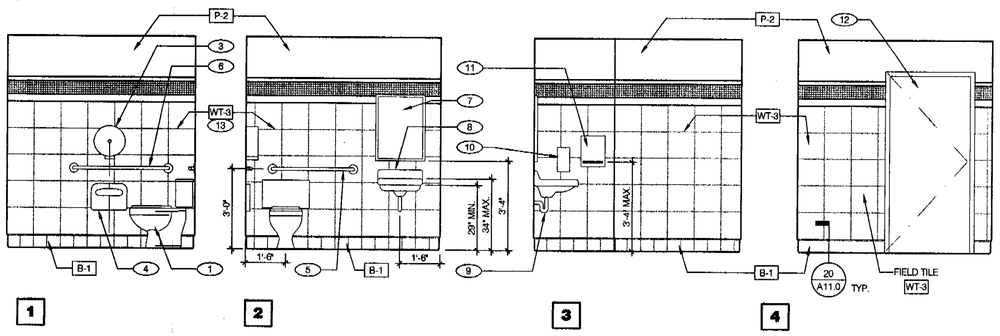

WOMEN'S RESTROOM 3/8"=1'-0"

NOTE:
FOR WALL ACCENT TILE PATTERN
SEE E/A10.1

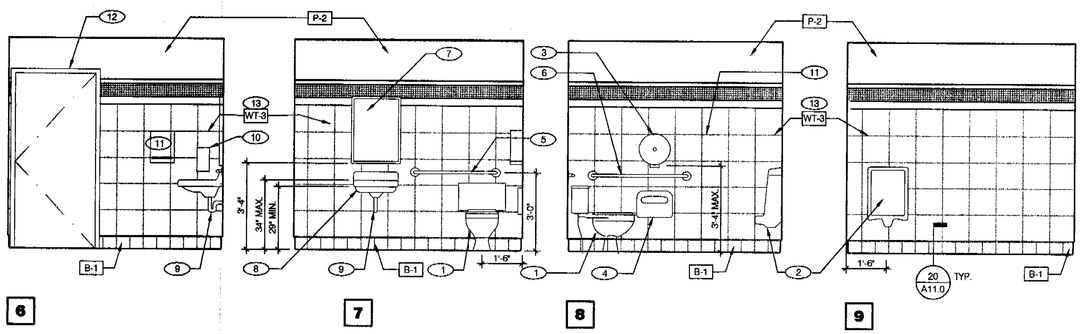

MEN'S RESTROOM 3/8"=1'-0"

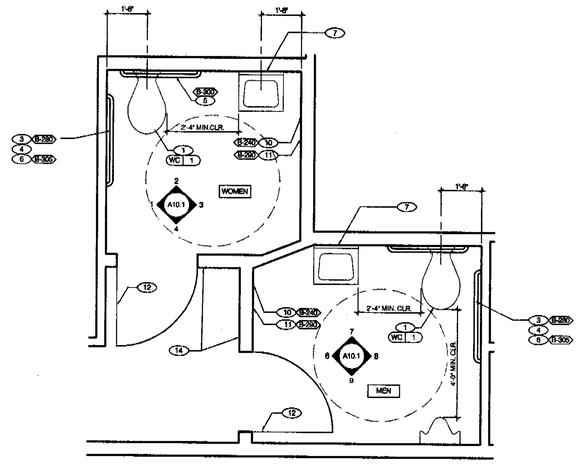

ENLARGED RESTROOM 1/2"=1'-0" | A

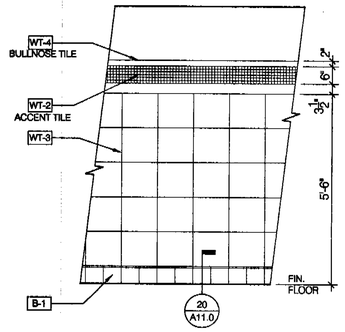

M2L011

RESTROOM WALL TILE PATTERN 1/2"=1'-0" | E

M2L059

NOT USED 1/2"=1'-0" | D

1. PROVIDE PROPER 2x BLOCKING AT WALL RECESSED MOUNTED ACCESSORIES.
2. GRAB BARS, FASTENERS AND MOUNTING DEVICES SHALL BE INSTALLED PER ADA REQUIREMENTS.
3. REFER TO FLOOR PLAN NOTES FOR BLOCKING AND SUBSTRATE NOTES.
4. LOCATE FLUSH HANDLE ON WIDE SIDE OF STALL.
5. PROVIDE WALL TILE BEHIND ENTIRE MIRROR AREA TO ALIGN MOUNTING SURFACES.
6. REFER TO ACCESSIBILITY CODES FOR MOUNTING HEIGHTS AND CLEARANCES OF ACCESSORIES AND FIXTURES.
7. ALL DIMENSIONS THIS DRAWING ARE TO FINISH SURFACE.
8. PROVIDE 5/8" CEMENTITIOUS BOARD SUBSTRATE FULL HEIGHT BEHIND ALL NEW TILED WALLS.

GENERAL NOTES | C

1. REFER TO "FLOOR PLAN NOTES," SHEET A1, FOR BLOCKING AND SUBSTRATE NOTES.
2. ☐ DENOTES FINISH MATERIAL. REFER TO SHEET A8.1 FOR FINISH SCHEDULE.
3. ⬭ DENOTES NEW TOILET ROOM ACCESSORIES. REFER TO SHEET A2.0.

1. REINSTALL W.C.
2. NOT USED.
3. REINSTALL TOILET PAPER HOLDERS
4. REINSTALL TOILET SEAT DISPENSER
5. REINSTALL 36" GRAB BAR
6. REINSTALL 42" GRAB BAR
7. INSTALL NEW ADA COMPLIANT MIRROR
8. REINSTALL SINK
9. INSULATE HOT WATER & DRAIN LINES
10. REINSTALL SOAP DISPENSER
11. REMOVE HAND DRYER AND REPLACE WITH SURFACE MOUNTED PAPER TOWEL DISPENSER, BOBRICK #B-262
12. NEW DOOR WITH EXISTING DOOR FRAME, SEE DOOR SCHEDULE A1.1
13. WALL TILE AS INDICATED, SEE GENERAL NOTES #8
14. NEW ADA SIGNAGE w/ BRAILLE.

KEY NOTES | B

THE FRAZIER GROUP
DESIGN & DEVELOPMENT SERVICES
5165 DREDGER WAY
ORANGEVALE, CALIFORNIA
95662 (916) 988-8364

LICENSED ARCHITECT
DAVID SCOTT ANDERSON
No. C-29718
Ren. 2-07
STATE OF CALIFORNIA

TACO BELL REMODEL
2770 ALUM ROCK
SAN JOSE, CA

CONTRACT:	8-22-05
BUILDING STYLE:	
PLAN VERSION:	
SITE NO:	
TFG NO:	55004
WORK DT:	11-7-06
ISSUE DT:	

SHEET

INT. ELEV'S. & ENL. PLAN RESTROOMS

A10.1

S:\0604-TB Alum Rock_0604_A10.1.dwg Nov 08, 2006 - 1:07pm

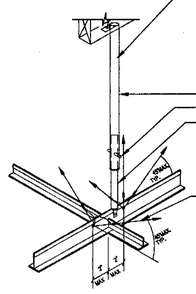

SUSPENDED CEILING N.T.S. | 18

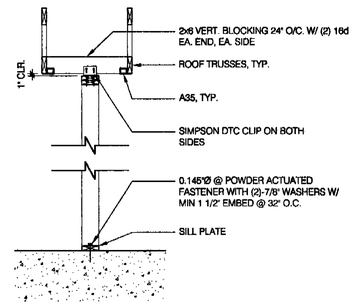

SUPPORT- PARALLEL TO TRUSS 1/2" = 1'-0" | 13

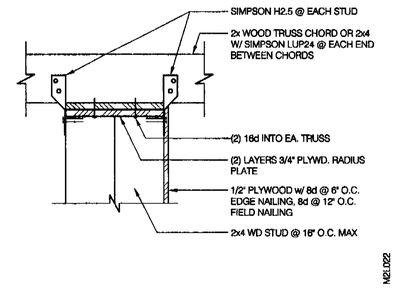

CONNECTION DETAIL 1 1/2" = 1'-0" | 9

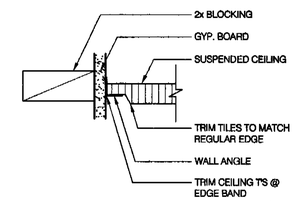

WALL ANGLE 3" = 1'-0" | 5

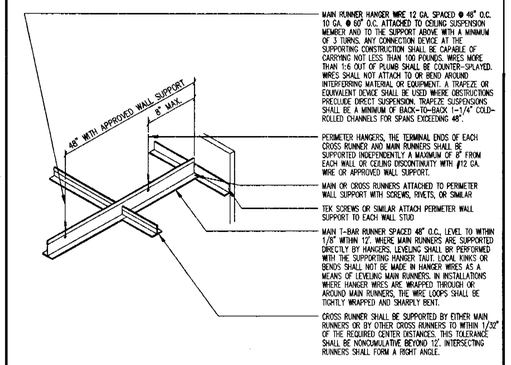

SUSPENDED CEILING NTS | 1

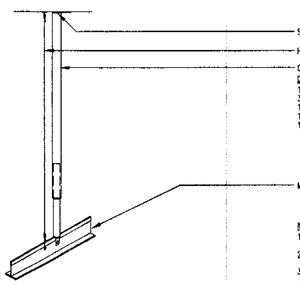

SUSPENDED CEILING N.T.S. | 19

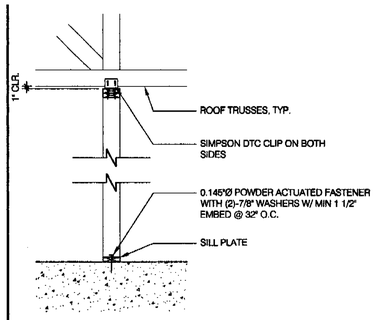

SUPPORT PERP. TO TRUSS 1/2" = 1'-0" | 14

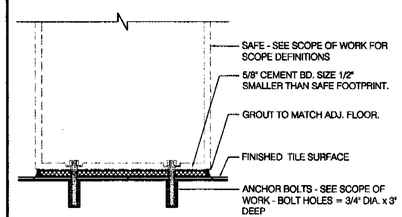

SAFE PEDESTAL 1" = 1'-0" | 10

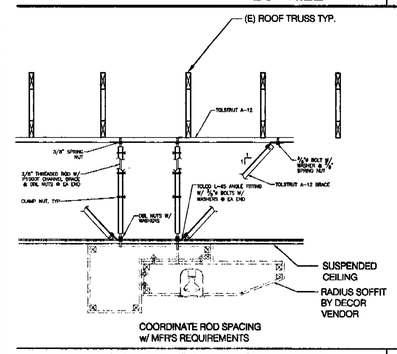

RADIUS SOFFIT SUPPORT 1/2"=1'-0" | 6

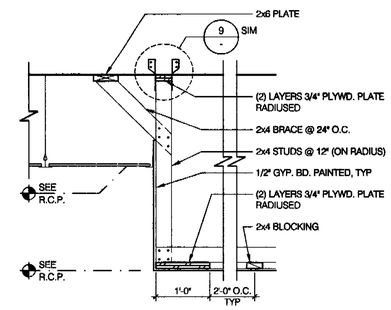

DINING ROOM SOFFIT 3/4" = 1'-0" | 2

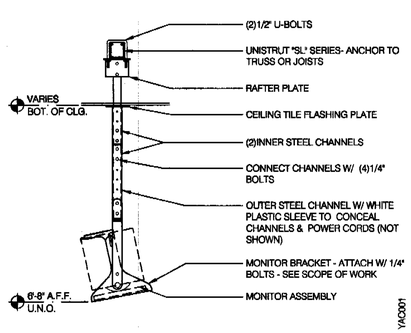

MONITOR CEILING BRACKET N.T.S. | 19

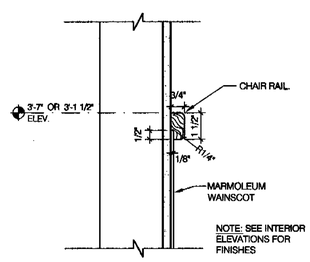

CHAIR RAIL 3" = 1'-0" | 15

NOT USED 3" = 1'-0" | 11

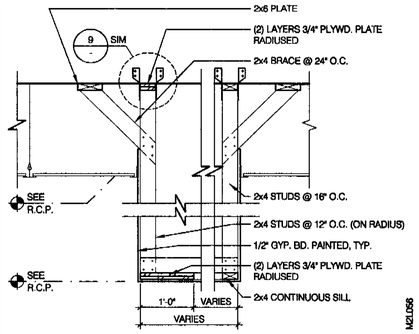

SERVICE COUNTER SOFFIT 3/4"=1'-0" | 7

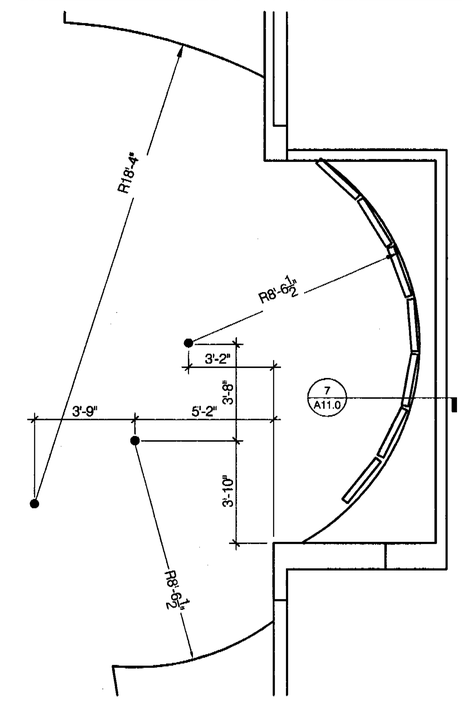

SOFFIT PLAN 3/8" = 1'-0" | 4

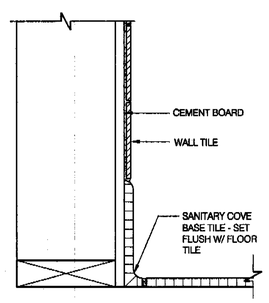

BASE IN RESTROOM 3"=1'-0" | 20

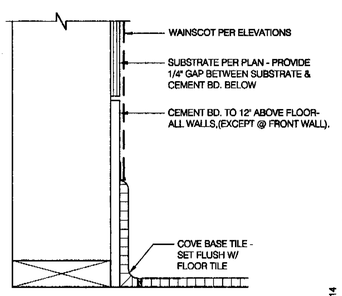

BASE @ DINING ROOM 3" = 1'-0" | 16

NOT USED 3" = 1'-0" | 12

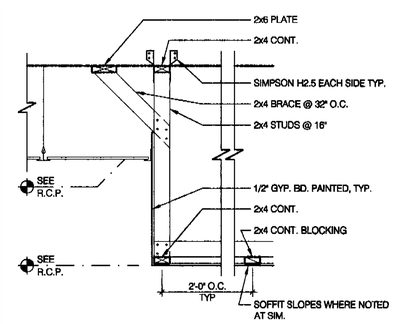

TYPICAL SOFFIT 3/4" = 1'-0" | 8

S:\0604-TB Alum Rock_0604_A11.0.dwg Nov 08, 2006 - 10:55am

THE FRAZIER GROUP
DESIGN & DEVELOPMENT SERVICES
5165 DREDGER WAY
ORANGEVALE, CALIFORNIA
95662 (916) 988-8364

LICENSED ARCHITECT
DAVID SCOTT WILSON
No. C-29710
Ren. 2-07
STATE OF CALIFORNIA

TACO BELL REMODEL
2770 ALUM ROCK
SAN JOSE, CA

CONTRACT:	8-22-05
BUILDING STYLE:	
PLAN VERSION:	
SITE NO:	
TFG NO:	55004
WORK DT:	11-7-06
ISSUE DT:	

TACO BELL

SHEET

INTERIOR CONSTRUCTION DETAILS

A11.0

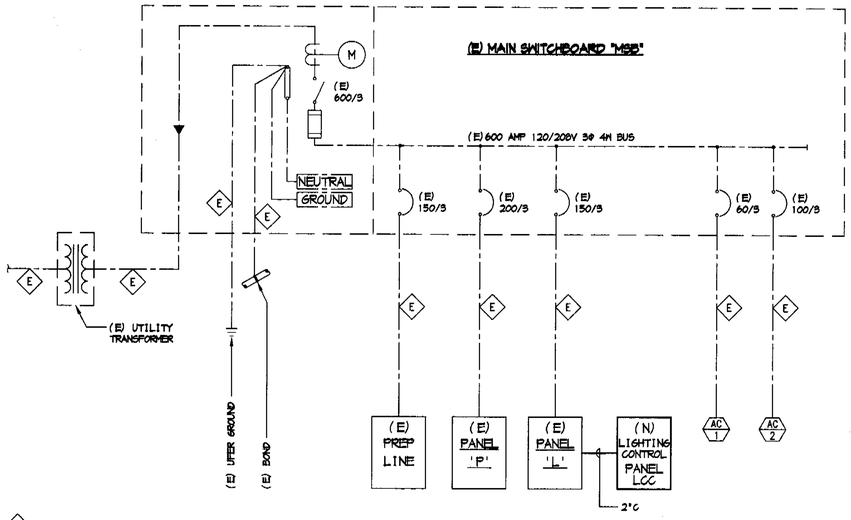

ONE LINE DIAGRAM

NOT TO SCALE

ELECTRICAL LEGEND

- 2X4 FLUORESCENT FIXTURE
- 2X4 FLUORESCENT FIXTURE WITH BATTERY PACK
- 1X4 FLUORESCENT FIXTURE
- 2X2 FLUORESCENT FIXTURE
- DOWNLIGHT FIXTURE
- PENDANT MOUNTED LIGHT FIXTURE
- TRACK MOUNTED PENDANT LIGHT FIXTURE
- COOLER FIXTURE
- EXHAUST HOOD FIXTURE
- EXIT SIGN
- EXIT LIGHT (CEILING MOUNTED)
- COMPACT FLUORESCENT
- SECURITY STROBE
- NL — NIGHT LIGHT
- EMERGENCY LIGHTS
- WALL SCONCE
- A — FIXTURE TAG 'A' - DENOTES FIXTURE TYPE
- S — CEILING MOUNTED SPEAKER
- S — WALL MOUNTED SPEAKER
- JUNCTION BOX
- WALL MOUNTED JUNCTION BOX
- TELEPHONE OUTLET
- DEDICATED GROUNDED OUTLET
- DUPLEX GROUNDED OUTLET
- DOUBLE DUPLEX GROUNDED OUTLET
- GROUND FAULT DUPLEX OUTLET
- GROUND FAULT DUPLEX W/ BOTT. HALF SWITCHED
- GROUND FAULT DEDICATED OUTLET
- CEILING DUPLEX OUTLET
- DUPLEX ISOLATED GROUND OUTLET
- DOUBLE DUPLEX ISOLATED GROUND OUTLET
- DEDICATED ISOLATED GROUND
- SPECIAL PURPOSE OUTLET
- ELECTRICAL PANEL. SEE SHEET E2.1 FOR PANEL SCHED.
- HOLD UP EMERGENCY BUTTON
- ELECTRICAL MOTOR
- 69 m — MOTOR RATED SWITCH
- SD — DUCT MOUNTED SMOKE DETECTOR
- C — CONNECTION TO EQUIPMENT
- FUSIBLE DISCONNECT SWITCH WITH STARTER
- FUSED DISCONNECT SWITCH
- NON-FUSED DISCONNECT SWITCH
- PC — PHOTOCELL
- RS — RAIN SENSOR
- FLUORESCENT WALL MOUNT FIXTURE
- SECURITY LIGHT
- $P — SINGLE POLE, SINGLE THROW TOGGLE SWITCH
- $P — SINGLE POLE, SINGLE THROW TOGGLE SWITCH W/ PILOT LIGHT
- R — RELAY
- CONDUIT RUN, CONCEALED IN WALL OR CEILING
- CONDUIT RUN, UNDERGROUND
- SMOKE DETECTOR
- WP — WEATHERPROOF

SERVICE LOAD CALCULATIONS

(E) MSB

(E) PANEL-PREP LINE	=	32.40	kVA
(E) PANEL-P	=	48.00	kVA
(E) PANEL-L	=	26.44	kVA
(E) A/C #1	=	13.50	kVA
(E) A/C #2	=	15.00	kVA
(E) 25% OF LARGEST MOTOR -	=	3.75	kVA
TOTAL	=	139.09	kVA

LOAD AT 120/208V, 3Ø, 4W 139.09 kVA ÷ .360 = 386.36 AMPS

THE EXISTING BUILDING SERVICE IS 600 AMPS

SUMMARY OF THE PANEL 'L' LOAD INCREASE

NEW LIGHTING LOAD		2.97 KVA
NEW SIGN LOADS	8 X 1.20KVA	9.60
NEW RECEPTACLES	5 X 0.18 KVA	0.90
TOTAL NEW LOADS		7.47 KVA
EXISTING LIGHTING LOADS REMOVED		-6.31
TOTAL PANEL LOAD INCREASE		1.16 KVA

TOTAL INCREASE 1.16 KVA ÷ .360 = 3.22 AMPERES

PANEL 'L'

(EXISTING)

VOLTAGE: 120/208V, 3Ø, 4W — MOUNTING: RECESSED — KVA: 26.44
BUS: 200 AMP — TYPE: MLO — CURRENT: 73.44 AMPS

	LOAD	KVA	CB	NO		NO	CB	KVA	LOAD	
(N)	LIGHTING - GENERAL	0.46	20/1	1		2	20/1	0.45	TIME CLOCK	(E)
	- SPARE			3		4		0.92	LIGHTING - GENERAL	
	- GENERAL	1.20		5		6		0.92	- MENU BOARD	
(E)		0.43		7		8		0.60	- EMERGENCY LIGHTS	
		0.92		9		10		1.51	- EXTERIOR	(N)
(N)	- EXT./NIGHT LIGHTS	0.65		11		12		1.92		(E)
(E)	- KITCHEN	0.54		13		14		1.20		
		0.54		15		16		1.44		
		0.60		17		18		1.44		
	- OFFICE	0.16		19		20		1.44	- POLE	
	- RESTROOM & EXTERIOR	0.38		21		22		0.18	- KIT HOOD	
	- GENERAL	0.45		23		24	20/3			
			20	25		26		3.60	EXHAUST FAN #3	
	HAU	2.70		27		28				
			3	29		30	20/1		LIGHTING - MENU BOARD DT	
(N)	LIGHTING - BLDG SIGN	1.20	20/1	31		32		0.80	DT EQUIPMENT	
		1.20		33		34			SPARE	
		1.20		35		36				
(E)	SPARE			37		38				
				39		40				
				41		42		0.90	RECEPTS - SHOW WINDOW	(N)

NOTE: VERIFY THE EXACT TERMINATION LOCATION OF THE (N) & (E) BRANCH CIRCUITS IN THE FIELD, SLIGHT VARIATIONS MAY EXIST

LIGHTING CONTROL CABINET "LCC"

THE LIGHTING CONTROL CABINET SHALL CONSIST OF:
- (1) PCI #LK LITE KEEPER WITH 8 PROGRAMMABLE RELAYS.
- PHOTOCELL ON ROOF FOR EXTERIOR LIGHT FIXTURES.
- OVERRIDE SWITCHES EQUAL TO LEVITON SPDT LOW VOLTAGE (3 #14 WIRES TO EACH SWITCH)
- 120V POWER FROM CIRCUIT

CONTROL SCHEDULE

CIRCUIT DESIGNATION	DESCRIPTION	CONTROL TYPE	OVERRIDE
L-1,3	TENANT SPACE	TIME CLOCK ON TIME CLOCK OFF	OVERRIDE SWITCH 'A'
L-10,31,33,35	EXTERIOR BLDG & SIGNAGE	PHOTOCELL ON TIME CLOCK OFF	NONE

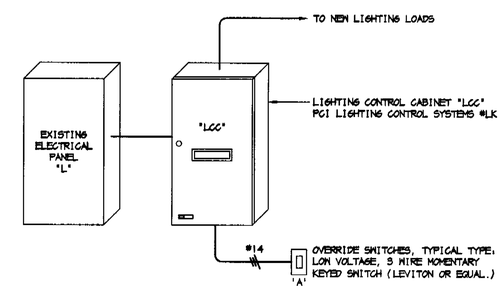

LIGHTING CONTROL DIAGRAM "LCC"

NOT TO SCALE

THE FRAZIER GROUP
DESIGN & DEVELOPMENT SERVICES
5165 DREDGER WAY
ORANGEVALE, CALIFORNIA
95662 (916) 988-8364

Nov 08 2006
REGISTERED PROFESSIONAL ENGINEER
ELECTRICAL
STATE OF CALIFORNIA

CAPITOL CITY DESIGN, INC
Electrical Engineering Consultants
1751 Cebrian Street
West Sacramento, CA 95691
916-375-0135
Fax: 916-375-0175
www.capitolcitydesign.com

TACO BELL REMODEL
2770 ALUM ROCK
SAN JOSE, CA

CONTRACT:	8-22-05
BUILDING STYLE:	
PLAN VERSION:	
SITE NO:	
TFG NO:	2006-204
WORK DT:	11-08-06
ISSUE DT:	

TACO BELL

SHEET
LEGEND, RISER DIAGRAM, PANEL SCHED.

E1.0

C:\SDSK\Proj\2006-204\06204-E1.dwg Time:Nov08,2006-02:07pm Login: jgaines Dimscale:1 LTScale:0.5 Images: Xrefs: "C:\sdsk\proj\2006-204\xrefs\xbdf-35TFG.dwg

THESE PLANS AND SPECIFICATIONS SHALL NOT BE REPRODUCED OR MODIFIED IN WHOLE OR IN PART WITHOUT WRITTEN CONSENT FROM CAPITOL CITY DESIGN INC. FURTHERMORE, CAPITOL CITY DESIGN INC DISCLAIMS RESPONSIBILITY FOR THESE PLANS AND SPECIFICATIONS IF THEY ARE USED IN WHOLE OR IN PART AT ANY SITE OTHER THAN THE ONE FOR WHICH THEY WERE SPECIFICALLY PREPARED.