City of San Jose - Building Division - Index Cover

Address 1007 CAPITOL EXPRESSWAY (MANY ADDRESSES)

PLAN CHECK NO. _____ **PERMIT NO.** B05-060123

Prepared By MV **Page #** _____ **Date** 12-9-2005

Category	Document Type	Sub Document Type
☐ MP Tracts	☐ TB Planning Permit	
	☐ PP Plot Plans	
	☐ TP Tract Plans	☐ PN Planning ☐ BD Building ☐ PB Plumbing ☐ MM Mechanical ☐ EE Electrical
	☐ TD Supporting Documents	
	☐ TC Structural Calculations	
	☐ TS Soils Report	
	☐ TT Trusses/Shop Drawings	
	☐ TM Tract Map	☐ AR Addressed
☒ PL Plans	☐ PI Planing Permit	
	☒ EP Plans	☐ PA Planning ☒ BL Building ☐ BP Plumbing ☐ BM Mechanical ☐ BE Electrical
	☐ PM Parcel Map	
	☐ SC Structural Calculations	
	☐ SD Supporting Documents	
	☐ SR Soils Report	
	☐ TR Trusses/Shop Drawing	
	☐ CR Copy Request	
☐ PT Permits	☐ AD Addressing	
	☐ IN Inspection Notices	☐ EP Expired
	☐ PR Permits & Applications	☐ CC Cash Receipts / Refunds ☐ CO C of O ☐ CP Correspondence ☐ EX Expired / Voided ☐ FI Finals ☐ IN Initial ☐ IS Initial – Supporting Doc's ☐ MR Meter Releases ☐ SI Special Inspection Reports
	☐ CF Compliance Files	☐ CN Compliance Notices ☐ RS Rescind ☐ SW Stop Work Orders
	☐ DR Damage Reports	☐ ED Earthquake Damage ☐ FD Flood Damage ☐ FA Fire/Auto Survey

Rev. 4/30/02

GOULD CENTER
SEISMIC RETROFIT

EXISTING BUILDINGS A, B, C & E

CAPITOL EXPRESSWAY AND McLAUGHLIN AVENUE SAN JOSE, CALIFORNIA

CITY OF SAN JOSE BUILDING DIVISION
APPROVED PLAN SET
☒ OFFICE SET ☐ FIELD SET
ADDRESS 1207 E Capitol Expwy
PERMIT No. ____ DATE ___
P.C. No. 04-112856 DATE ___
CODE EDITIONS: UBC ___ NEC ___ UMC ___ NEC ___ ENERGY ___ DA ___
(OCCUPANCY GROUPS): M TYPE OF CONSTRUCTION III-N&VN
PLANS APPROVED FOR: CHECKED BY / APPROVED BY
☒ BUILDING NON STRUCT NISSAN NISSAN
☒ BUILDING STRUCT
☐ ~~ELECTRICAL~~
☐ ~~PLUMBING~~
☐ ~~MECHANICAL~~
☐ ~~FIRE~~
☐ ~~OTHER~~
☐ ZONING PLANNING PERMIT #
COMMENTS

REQUIRED INSPECTIONS IN ADDITION TO BUILDING DIVISION INSPECTIONS
SPECIAL INSPECTION REQUIRED ☒ YES ☐ NO
STRUCTURAL OBSERVATION ☐ YES ☐ NO
SOILS ENGINEER INSPECTION REQ'D ☐ YES ☐ NO
COMPACTION REPORT REQ'D ☐ YES ☐ NO
FLOOD ELEVATION CERT. REQ'D ☐ YES ☐ NO
PUBLIC WORKS INSPECTION REQ'D ☐ YES ☐ NO
FIRE DEPT INSPECTION REQ'D ☐ YES ☐ NO
COMMENTS

GOULD SHOPPING CENTER

CAPITOL EXPRESSWAY
SAN JOSE, CALIFORNIA

KENNETH RODRIGUES & PARTNERS INC
10 South Third Street, Suite 400
San Jose, CA 408.993.0700

CONSULTANT

LICENSED ARCHITECT KENNETH A. RODRIGUES No. C12819 Exp. 12-05 STATE OF CALIFORNIA

KEYMAP

B05060123

REVISION

5.3.04 PLAN CHECK SUBMITTAL
5-5-04 ISSUED FOR PRICING
1 9-7-04 CITY PLAN CHECK #1

GRAPHIC SCALE

PROJECT NO. 18.519 DATE 10/31/03
DRAWN BY kw/mo SCALE None

TITLE SHEET

NORTH

A0.0

P/C 04-112856

© 2003 KENNETH RODRIGUES & PARTNERS, INC.

DATE PLOTTED:

VICINITY MAP

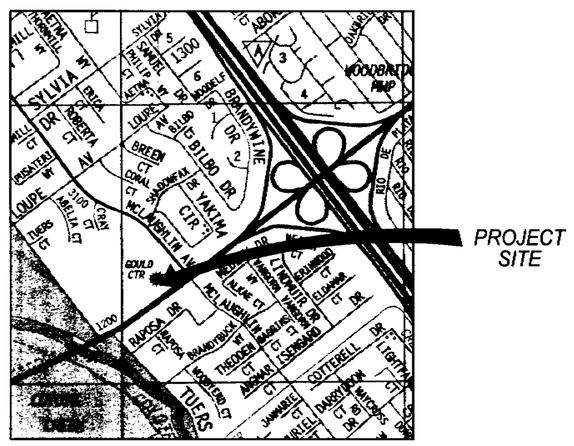

NOT TO SCALE

PROJECT TEAM

CLIENT/DEVELOPER

KENNETH T. NAMIMATSU
14523 Sobey Road
Saratoga, CA

PHONE: 408 . 867 . 8898
FAX: 408 . 867 . 9393
CONTACT: Kenneth T. Namimatsu

ARCHITECT

KENNETH RODRIGUES & PARTNERS, INC.
10 South Third Street, Suite # 400
San Jose, CA. 95113

Phone 408 . 993 . 0700
Fax 408 . 993 . 0707
Contact Manuel Ordonez A.I.A.

STRUCTURAL ENGINEER

DUQUETTE ENGINEERING
10 South Third Street
San Jose, CA. 95113

Phone 408 . 494 . 0944
Fax 408 . 494 . 0940
Contact Steve Duquette, SE

SCOPE OF WORK

VOLUNTARY PARTIAL UPGRADE IN COMPLIANCE TO SECTION 3403 OF U.B.C 97 & 1134B.2 of CBC 2001
VOLUNTARY SEISMIC UPGRADE SHALL COMPY WITH CSJ POLICY REQUIREMENTS UNDER POLICY UBC 3403.2-1-94.

VOLUNTARY SEISMIC RETROFIT TO EXISTING BUILDINGS A, B, C & E FOR LATERAL ANALYSIS, IN PLANE SEISMIC ANALYSIS AND OUT OF PLANE WALL ANCHORAGE

REPAIR/REPLACEMENT IN KIND FOR ONE LOADING DOCK WALL AT BUILDING A

NO ARCHITECTURAL EXTERIOR OR INTERIORS, SITE WORK, ELECTRICAL, MECHANICAL AND PLUMBING WORK UNDER THIS PHASE OF WORK

NO CHANGE IN BUILDING AREA OR USE

DESIGN CRITERIA

DESIGN CRITERIA:

THESE DRAWINGS DELINEATE ELECTIVE STRUCTURAL UPGRADE RECOMMENDED BY DUQUETTE ENGINEERING. THE ANALYSIS AND DESIGN HAVE BEEN COMPLETED USING THE 2001 CBC.

PHASE 1

BUILDING A

1.) CONCRETE BLOCK SHEARWALLS
2.) CONCRETE BLOCK WALL ANCHORAGE
3.) ROOF SUBDIAPHRAGMS
4.) ROOF DIAPHRAGM - EXCEPT LINES 1 AND 7
5.) DIAPHRAGM SHEAR TRANSFER
6.) COLLECTORS

BUILDING B

1.) CONCRETE BLOCK SHEARWALLS - EXCEPT LINE B.7
2.) CONCRETE BLOCK WALL ANCHORAGE
3.) ROOF SUBDIAPHRAGMS
4.) ROOF DIAPHRAGM
5.) DIAPHRAGM SHEAR TRANSFER
6.) COLLECTORS

BUILDING C

1.) CONCRETE BLOCK SHEARWALLS - EXCEPT LINES F AND 11
2.) CONCRETE BLOCK WALL ANCHORAGE
3.) ROOF SUBDIAPHRAGMS
4.) ROOF DIAPHRAGM
5.) DIAPHRAGM SHEAR TRANSFER
6.) COLLECTORS

BUILDING E

1.) CONCRETE BLOCK SHEARWALLS - EXCEPT LINE 4
2.) CONCRETE BLOCK WALL ANCHORAGE
3.) ROOF SUBDIAPHRAGMS
4.) ROOF DIAPHRAGM
5.) DIAPHRAGM SHEAR TRANSFER - EXCEPT LINE F
6.) COLLECTORS

PHASE 2

ARCADE ALTERATION NOT TO BE PERMITTED AT THIS TIME.

SHEET INDEX

ARCHITECTURAL

A0.0 TITLE SHEET
A1.0 OVERALL SITE PLAN

STRUCTURAL

S0.0 STRUCTURAL SPECIFICATIONS, ABREVIATIONS LEGEND, SYMBOLS LEGEND
S1.0A FOUNDATION PLAN - BUILDING A
S1.1A ROOF FRAMING PLAN- BUILDING A
S1.1B ROOF FRAMING PLAN- BUILDING B
S1.1C ROOF FRAMING PLAN- BUILDING C
S1.1E ROOF FRAMING PLAN- BUILDING E
S3.0 RETROFIT FRAMING DETAILS

PROJECT DATA

A.P.N.	449-36-52 (BLDG A) 449-36-51 (BLDG B) 449-36-50 (BLDG C) 449-36-55 (BLDG E)
TOTAL SITE AREA (EXISTING)	15.469 ACRES
BUILDING AREA (EXISTING)	
BUILDING A: TYPE III-N/M, SPRINKLERED 1031 E. CAPITOL EXPRESSWAY	39,368 SF
BUILDING B: TYPE III-N/M, SPRINKLERED 1035 E. CAPITOL EXPRESSWAY	38,376 SF
BUILDING C: TYPE V-N/M, NON-SPRINKLERED 1045- 1059 E. CAPITOL EXPRESSWAY	15,266 SF
BUILDING E: TYPE V-N/M, NON-SPRINKLERED 1007-1015 E. CAPITOL EXPRESSWAY	9,800 SF
PARKING TOTAL (EXISTING)	738 STALLS
STORIES	1 STORY

STAIR SECTION | ½" | 3

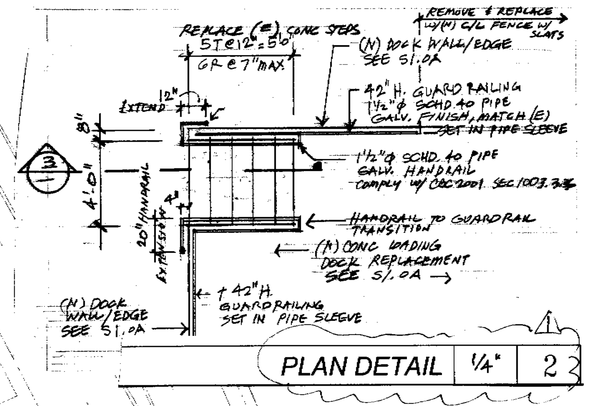

PLAN DETAIL | ¼" | 2

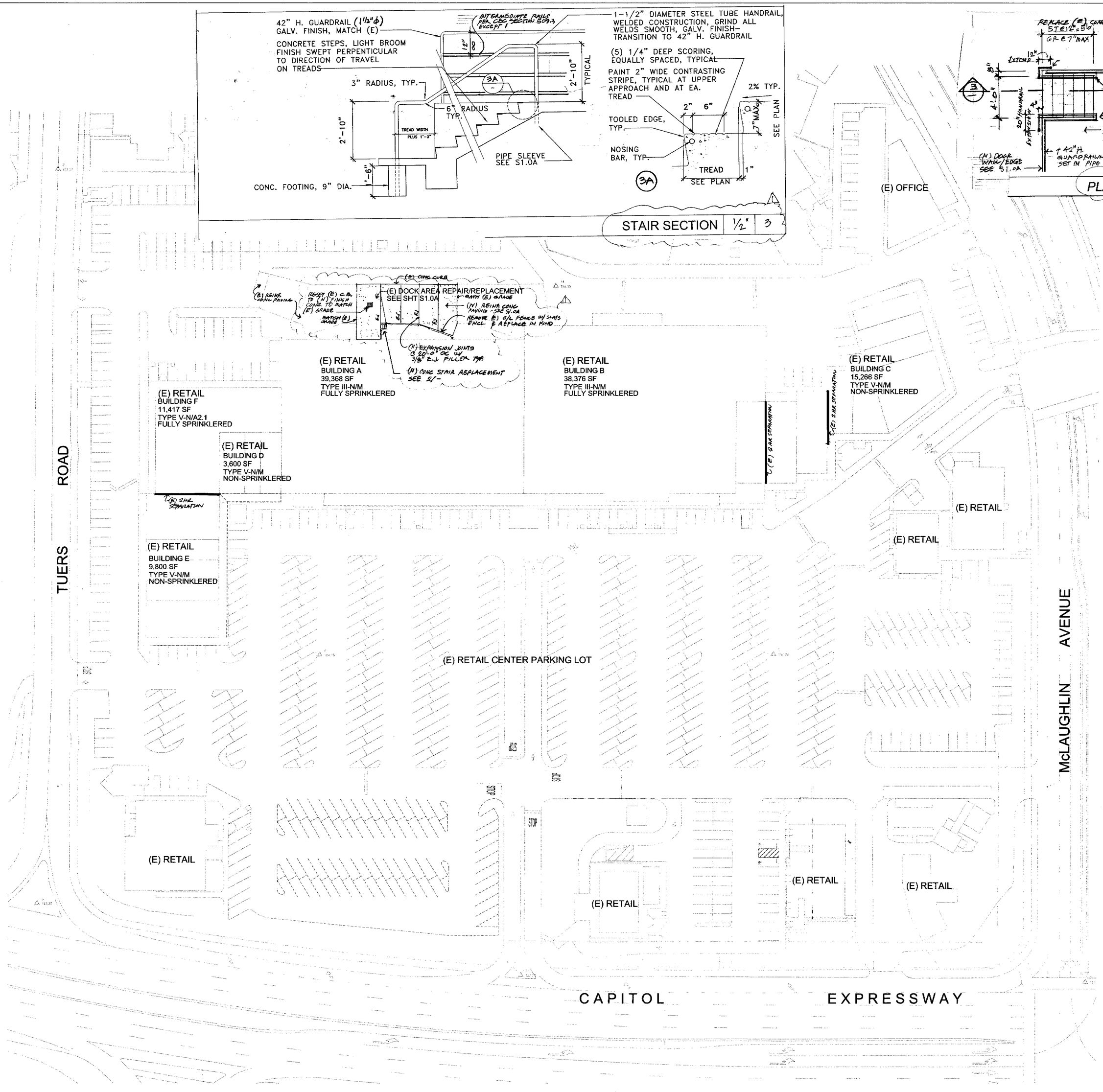

OVERALL SITE PLAN | 1=40' | 1

GOULD SHOPPING CENTER

CAPITOL EXPRESSWAY
SAN JOSE, CALIFORNIA

KENNETH RODRIGUES & PARTNERS INC.
10 South Third Street, Suite 400
San Jose, CA 408.993.0700

CONSULTANT

LICENSED ARCHITECT KENNETH A. RODRIGUES C12,818 6-30-05 STATE OF CALIFORNIA

KEYMAP

REVISION

	5.3.04	PLAN CHECK SUBMITTAL
	5-5-04	ISSUED FOR PRICING
1	9-7-04	CITY PLAN CHECK #1

GRAPHIC SCALE

PROJECT NO. 18.519 DATE 10.31.03
DRAWN BY kw/mo SCALE 1=40

SITE PLAN

NORTH

A1.0

© 2003 KENNETH RODRIGUES & PARTNERS, INC.

DATE PLOTTED:

STRUCTURAL SPECIFICATIONS

SHEATHING

ALL PLYWOOD OR OSB SHEATHING SHALL CONFORM TO U.S. PRODUCT STANDARD PS 1, AMERICAN PLYWOOD ASSOCIATION. EACH SHEET SHALL BE STAMPED WITH THE PS AND/ OR APA GRADEMARK.

ROOF SHEATHING

- SHALL BE MINIMUM 1/2"-3 PLY INTERIOR TYPE RATED SHEATHING, C-D GRADE WITH EXTERIOR GLUE (CDX-EXPOSURE 1). SPAN RATING 32/16, SPECIES GROUP 2 OR BETTER.

WALL SHEATHING

- SHALL BE MINIMUM 1/2"-3 PLY INTERIOR TYPE RATED SHEATHING, C-D GRADE WITH EXTERIOR GLUE (CDX-EXPOSURE 1). SPAN RATING 24/0, SPECIES GROUP 2 OR BETTER.

ALL SHEATHING PERMANENTLY EXPOSED TO WEATHER SHALL BE EXTERIOR TYPE SHEATHING VS. INTERIOR TYPE PLYWOOD AS REFERENCED ABOVE.

ALL UNBLOCKED SHEATHING EDGES SHALL BE TONGUE-AND-GROOVE OR SUPPORTED WITH SHEATHING CLEATS OR SHEATHING CLIPS.

FRAMING

DOUGLAS FIR COAST REGION, CONFORMING TO WEST COAST LUMBER INSPECTION BUREAU STANDARD GRADING AND DRESSING RULE NO. 17 AS AMENDED TO DATE.

1. 2x, 3x, PLATES, JOISTS, AND PURLINS NO.2 (875F-b), PARA. 123-a.
2. 4x, PURLINS, LEDGERS, AND BEAMS, NO.1 (1000F-b), PARA. 123-b.
3. 6x BEAMS, DENSE NO.1 (1550F-b), PARA. 130-bb.
4. 4x4 POSTS, NO.1 (1450F-c), PARA. 124-b.
5. 4x6 POSTS, NO.1 (1450F-c), PARA. 123-b.
6. 6x6 AND LARGER POSTS, DENSE NO.1 (1000F-c), PARA. 131-bb.
7. 2x4, 3x4, STUDS BLOCKING, CONSTRUCTION GRADE, (1000F-b), PARA. 122-b.
8. 2x6 OR LARGER STUDS AND BLOCKING NO.1 (1000F-b), PARA. 123-b.
9. FOUNDATION PLATES: PRESSURE TREATED DOUGLAS FIR.

ALL FRAMING LUMBER 6" OR LARGER IN THE LEAST DIMENSION SHALL BE F.O.H.C.

PARALLAMS / MICROLLAMS

PARALLAMS AND MICROLLAMS SHALL BE MANUFACTURED BY TRUS-JOIST MACMILLAN CORP., P.O. BOX 60, BOISE, IDAHO, 83707. PARALLAM AND MICROLLAM CONSTRUCTION SHALL BE IN ACCORDANCE WITH ICBO REPORT ER-4979.

LAMINATED MEMBERS

LAMINATED MEMBERS SHALL BE IN CONFORMANCE WITH THE STANDARD SPECIFICATIONS FOR STRUCTURAL GLU-LAMINATED TIMBER PER ANSI/AITC A190.1
MEMBERS SHALL BE INDUSTRIAL APPEARANCE GRADE, EXTERIOR GLUE, END SEALED, LOAD WRAPPED AND MARKED WITH A QUALITY MARK AND A CERTIFICATE SHALL BE PROVIDED TO THE ENGINEER AND BUILDING DEPARTMENT INDICATING CONFORMANCE WITH ANSI/AITC A190.1, STRUCTURAL GLU-LAMINATED TIMBER.

1. GLU-LAMS: AITC COMBINATION SYMBOL 24F-V4, LAMINATIONS DF/DF AT SIMPLE SPANS.

   AITC COMBINATION SYMBOL 24F-V8, LAMINATIONS DF/DF AT CANTILEVER OR CONTINUOUS SPAN BEAMS.

LIGHT GAGE METAL CONNECTORS

ALL LIGHT GAGE METAL CONNECTORS SHALL BE SIMPSON COMPANY STRONG TIE CONNECTORS, UNLESS NOTED OTHERWISE ON THE DRAWINGS.

CONCRETE

ALL CONCRETE SHALL HAVE PROPERTIES AS LISTED BELOW.

AT CONTRACTOR'S OPTION, AN AIR ENTRAINING AGENT CONFORMING TO THE LATEST REVISION OF ASTM SPECIFICATION C 260 MAY BE ADDED TO THE CONCRETE TO PROVIDE SPECIFIED AMOUNTS OF ENTRAINED AIR.

CONCRETE ELEMENT	MIN. 28 DAY COMPRESSIVE STRENGTH	MAX. SIZE AGGREGATE (INCHES)	MAX. SLUMP (INCHES)	TOTAL AIR CONTENT	W/C RATIO NO FLYASH	W/C RATIO INCL. FLYASH
FOOTINGS	2500	3/4	4	___(%)	.55	.45
SLABS ON GRADE	2500	3/4	4	4%±1.5%	.55	.45
YARD CONCRETE WALKS & CURBS	2000	3/4	4	---	.60	.50

REINFORCING STEEL

BARS FOR REINFORCING SHALL BE GRADE 60 DEFORMED BARS CONFORMING TO ASTM A-615 INCLUDING SUPPLEMENT S1. LAP SPLICES SHALL BE IN ACCORDANCE WITH ACI 318 UNLESS NOTED OTHERWISE ON THE PLANS.

SLAB MEMBRANE - 6 MIL. POLYETHYLENE FILM.

ADHESIVE ANCHORING FOR CONCRETE

EPOXY ADHESIVE SHALL BE SIMPSON EPOXY TIE ET (ICBO # ER4945). THE PROPORTIONS SHALL BE AS RECOMMENDED BY THE MANUFACTURER FOR THE CONDITION AND USE. PREPARATION OF CONCRETE INCLUDING DRILLING OF HOLES FOR ANCHORS AS WELL AS EPOXY ANCHOR INSTALLATION SHALL BE AS RECOMMENDED BY THE MANUFACTURER.

STRUCTURAL STEEL AND MISCELLANEOUS IRON

ASTM A-36, IN ACCORDANCE WITH AISC SPECIFICATIONS. ALL STRUCTURAL STEEL AND MISCELLANEOUS IRON SHALL RECEIVE SHOP PRIME COAT.

MACHINE BOLTS, ANCHOR BOLTS, STUDS AND THREADED RODS

ASTM A-307

EARTHWORK

EARTHWORK SHALL BE IN STRICT ACCORDANCE WITH THE RECOMMENDATIONS OF THE FOUNDATION INVESTIGATION BY EARTH SYSTEMS CONSULTANTS

SHOP DRAWINGS FOR THE ENGINEERS REVIEW WILL BE REQUIRED AS FOLLOWS:

1. MIX DESIGNS;
2. REINFORCING STEEL;
3. LAMINATED MEMBERS;

CONTRACTOR SHALL SUBMIT TWO SETS OF PRINTS AND ONE SET OF SEPIAS FOR REVIEW. FABRICATION SHALL NOT PROCEED UNTIL SHOP DRAWINGS HAVE BEEN REVIEWED BY THE ENGINEER.

CONSTRUCTION LIABILITY

CONSTRUCTION CONTRACTOR AND HIS SUBCONTRACTORS AGREE THAT IN ACCORDANCE WITH GENERALLY ACCEPTED CONSTRUCTION PRACTICES, CONSTRUCTION CONTRACTOR AND HIS SUBCONTRACTORS WILL BE REQUIRED TO ASSUME SOLE AND COMPLETE RESPONSIBILITY FOR JOB SITE CONDITIONS DURING THE COURSE OF CONSTRUCTION OF THE PROJECT, INCLUDING SAFETY OF ALL PERSONS AND PROPERTY; THAT THIS REQUIREMENT SHALL BE MADE TO APPLY CONTINUOUSLY AND NOT LIMITED TO NORMAL WORKING HOURS, AND CONSTRUCTION CONTRACTOR AND HIS SUBCONTRACTORS FURTHER AGREE TO DEFEND, INDEMNIFY AND HOLD DESIGN PROFESSIONAL HARMLESS FROM ANY AND ALL LIABILITY, REAL OR ALLEGED, IN CONNECTION WITH THE PERFORMANCE OF WORK ON THIS PROJECT, EXCEPT LIABILITY ARISING FROM THE SOLE NEGLIGENCE OF DESIGN PROFESSIONAL.

EXISTING CONDITIONS

THE CONTRACTOR OR SUBCONTRACTOR SHALL FIELD VERIFY ALL EXISTING CONDITIONS PRIOR TO BEGINNING CONSTRUCTION AND OR ORDERING MATERIAL, ANY DISCREPANCIES DISCOVERED SHALL BE BROUGHT TO THE ATTENTION OF THE ENGINEER IMMEDIATELY.

SPECIAL INSPECTIONS

THE OWNER SHALL EMPLOY A SPECIAL INSPECTOR DURING CONSTRUCTION ON THE FOLLOWING TYPES OF WORK:

ADHESIVE ANCHORS

- DURING ALL ADHESIVE ANCHORING INSTALLATIONS.

SPECIAL INSPECTOR

- THE SPECIAL INSPECTOR SHALL BE A QUALIFIED PERSON WHO SHALL DEMONSTRATE HIS COMPETENCE, TO THE SATISFACTION OF THE BUILDING OFFICIAL, FOR INSPECTION OF A PARTICULAR TYPE OF CONSTRUCTION OR OPERATION REQUIRING SPECIAL INSPECTION.

DUTIES AND RESPONSIBILITIES OF THE SPECIAL INSPECTOR

- THE SPECIAL INSPECTOR SHALL OBSERVE THE WORK ASSIGNED FOR CONFORMANCE WITH THE APPLICABLE DESIGN DRAWINGS AND SPECIFICATIONS.
- THE SPECIAL INSPECTOR SHALL FURNISH INSPECTION REPORTS TO THE BUILDING OFFICIAL, THE ENGINEER OR ARCHITECT OF RECORD, AND OTHER DESIGNATED PERSONS. ALL DISCREPANCIES SHALL BE BROUGHT TO THE IMMEDIATE ATTENTION OF THE CONTRACTOR FOR CORRECTION, THEN, IF UNCORRECTED, THE PROPER DESIGN AUTHORITY AND TO THE BUILDING OFFICIAL.
- THE SPECIAL INSPECTOR SHALL SUBMIT A FINAL SIGNED REPORT STATING WHETHER THE WORK REQUIRING SPECIAL INSPECTION WAS, TO THE BEST OF HIS KNOWLEDGE, IN CONFORMANCE WITH THE APPROVED PLANS AND SPECIFICATIONS AND THE APPLICABLE WORKMANSHIP PROVISION OF THIS CODE.

NAILING SCHEDULE

NAILED CONNECTION DESCRIPTION	MINIMUM REQUIRED NAILING (UNLESS DETAILED OTHERWISE)
JOIST TO SILL PLATE OR GIRDER	(3) 8d TOE NAILS
BRIDGING TO JOIST	(2) 8d TOE NAILS EA. END
1"x6" SUBFLOOR OR LESS	(2) 8d FACE NAILS EA.JOIST
WIDER THAN 1"x6" SUBFLOOR	(3) 8d FACE NAILS EA.JOIST
2" SUBFLOOR TO JOIST OR GIRDER	(2) 16d BLIND & FACE NAIL
SOLE PLATE TO JOIST OR BLOCKING	16d @ 16" o.c. FACE NAIL, (3) 16d EVERY 16" o.c. @ BRACED WALL PANELS
TOP PLATE TO STUD	(2) 16d END NAIL
STUD TO SILL PLATE	(4) 8d TOE NAIL, OR (2) 16d END NAIL
DOUBLE STUDS	16d FACE NAILS @ 24" o.c.
DOUBLE TOP PLATES	16d FACE NAILS @ 16" o.c., (8) 16d @ LAPS
BLKG. BTWN. JOISTS OR RAFTERS TO TOP PLATE	(3) 16d
RIM JOIST TO TOP PLATE	8d TOE NAILS @ 16" o.c.
TOP PLATE @ LAPS OR INTERSECTIONS	(2) 16d
CONT. HEADER, TWO PIECES (ALONG EA. EDGE)	16d @ 16" o.c.
CELING JOIST (CJ) TO PLATE	(3) 8d TOE NAILS
CONT. HEADER TO STUD	(4) 8d TOE NAILS
CELING JOIST (CJ) LAPPED OVER PARTITIONS	(3) 16d FACE NAILS
CELING JOIST (CJ) PARALLEL TO RAFTERS	(3) 16d FACE NAILS
RAFTER TO PLATE	(3) 8d TOE NAILS
1" BRACE TO EA. STUD & PLATE	(2) 8d FACE NAILS
1"x6" SHEATHING OR LESS TO EACH BEARING	(2) 8d FACE NAILS
WIDER THAN 1"x8" SHEATHING TO EACH BEARING	(3) 8d FACE NAILS
BUILT UP CORNER STUDS	16d @ 24" o.c.
BUILT UP GIRDERS AND BEAMS	20d @ 32" o.c. TOP & BOT. STAGGERED w/ (2) 20d @ EA/ END AND SPLICES
2" PLANKS, EACH END AND EACH BEARING	(2) 16d

NOTES:
1. USE COMMON WIRE NAILS FOR ALL NAILED CONNECTIONS. BOX NAILS ARE PROHIBITED.
2. WHERE POSSIBLE, DRIVE NAILS PERPENDICULAR TO THE GRAIN IN LIEU OF TOE NAILING.
3. NAILING DETAILED ELSEWHERE SUPERSEDE THE REQUIREMENTS OF THIS SCHEDULE. NAILING SHOWN ABOVE ARE MINIMUM REQUIREMENTS.

NAILING SCHEDULE (1)

DESIGN CRITERIA:

THESE DRAWINGS DELINEATE ELECTIVE STRUCTURAL UPGRADE RECOMMENDED BY DUQUETTE ENGINEERING. THE ANALYSIS AND DESIGN HAVE BEEN COMPLETED USING THE 2001 CBC.

PHASE 1

BUILDING A

1.) CONCRETE BLOCK SHEARWALLS
2.) CONCRETE BLOCK WALL ANCHORAGE
3.) ROOF SUBDIAPHRAGMS
4.) ROOF DIAPHRAGM - EXCEPT LINES (1) AND (7)
5.) DIAPHRAGM SHEAR TRANSFER
6.) COLLECTORS

BUILDING B

1.) CONCRETE BLOCK SHEARWALLS - EXCEPT LINE (B.7)
2.) CONCRETE BLOCK WALL ANCHORAGE
3.) ROOF SUBDIAPHRAGMS
4.) ROOF DIAPHRAGM
5.) DIAPHRAGM SHEAR TRANSFER
6.) COLLECTORS

BUILDING C

1.) CONCRETE BLOCK SHEARWALLS - EXCEPT LINES (F) AND (11)
2.) CONCRETE BLOCK WALL ANCHORAGE
3.) ROOF SUBDIAPHRAGMS
4.) ROOF DIAPHRAGM
5.) DIAPHRAGM SHEAR TRANSFER
6.) COLLECTORS

BUILDING E

1.) CONCRETE BLOCK SHEARWALLS - EXCEPT LINE (4)
2.) CONCRETE BLOCK WALL ANCHORAGE
3.) ROOF SUBDIAPHRAGMS
4.) ROOF DIAPHRAGM
5.) DIAPHRAGM SHEAR TRANSFER - EXCEPT LINE (F)
6.) COLLECTORS

PHASE 2

ARCADE ALTERATION NOT TO BE PERMITTED AT THIS TIME.

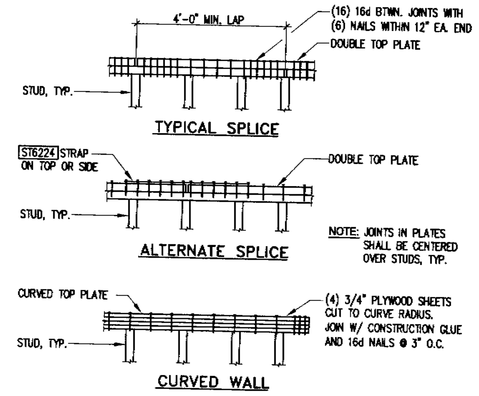

DOUBLE TOP PLATE DETAILS (2)

SCALE: 3/4" = 1'-0"

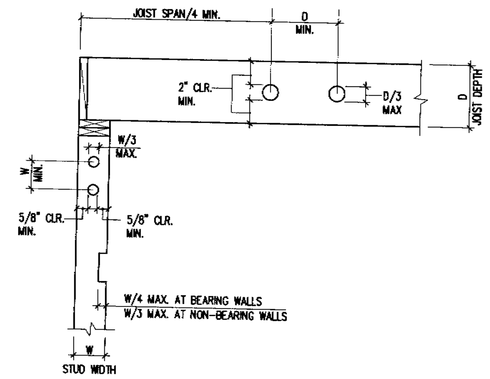

JOIST AND STUD CUTOUT LIMITS (3)

SCALE: 3/4" = 1'-0"

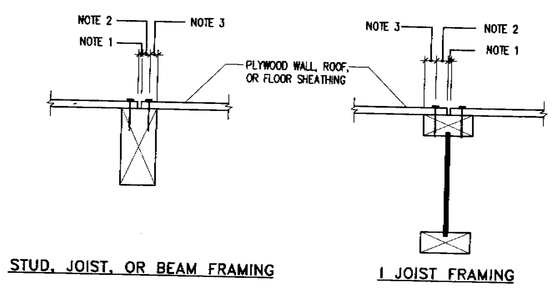

STUD, JOIST, OR BEAM FRAMING — I JOIST FRAMING

NOTES:
1. CLEARANCES PER PANEL MFG., 1/8" TYP.
2. 3/8" MIN. PANEL EDGE DISTANCE.
3. 5/16" MIN. LUMBER EDGE DISTANCE

MINIMUM NAILING EDGE DISTANCES FOR SHEATHING (4)

SCALE: 2" = 1'-0"

ABBREVIATIONS

&	And
@	At
A.B.	Anchor bolt
ALUM.	Aluminum
ARCH.	Architect or Architectural
BLK.	Block
BLKG.	Blocking
BN	Boundary Nailing per Schedule/Plan
BTWN.	Between
CL or ℄	Centerline
C.J.	Construction Joint or Cold Joint
CLR	Clear
COL.	Column
CONC.	Concrete
CONN.	Connection
CONT.	Continuous
CMU	Concrete Masonry Unit
DBL.	Double
DET.	Detail
DF	Douglas Fir
DIA.or∅	Diameter
DWG.	Drawing(s)
(E)	Existing
EA.	Each
E.F.	Each Face
E.J.	Expansion Joint
ELEV.	Elevation
EMBED.	Embedment
EN	Edge Nail per Shearwall Schedule
EXT.	Exterior
FDN.	Foundation
F.F.	Finish Floor
FLR.	Floor
FN	Field Nailing per Schedule
F.P.	Full Penetration
F.O.B.	Face of Building
F.O.C.	Face of Concrete
F.O.S.	Face of Stud
F.O.W.	Face of Wall
F.S.	Far Side
FTG.	Footing
ga.	Gage (Gauge)
GALV.	Galvanized
G.L.B.	Glulam Beam
GBOW.	Gypsum Board Dry Wall
GYP.	Gypsum
HORIZ.	Horizontal
H.S.B.	High Strength Bolt(s)
I.F.	Inside Face
INSUL.	Insulation
(L.L.H.)	Long Leg Horizontal
(L.L.V.)	Long Leg Vertical
MAX.	Maximum
M.B.	Machine Bolt(s)
MC	Miscellaneous Channel
MECH.	Mechanical
MFR.	Manufacturer
M.I.	Malleable iron
MIN.	Minimum
(N)	New
N.T.S.	Not To Scale
N.I.C.	Not In Contact
N.S.	Near Side
O.M.R.F.	Ordinary Moment Resisting Frame
O.F.	Outside Face
O.H.	Opposite Hand
PL or ℙ	Plate
PLAS.	Plaster
PLYWD.	Plywood
P.P.	Partial Penetration
PT.	Point
PTDF	Pressure Treated Douglas Fir
REINF.	Reinforcing or Reinforcement
REQ.	Require or Required
RDWD.	Redwood
SECT.	Section
SHT.	Sheet
SIM.	Similar
SMRF	Special Moment Resisting Frame
SPECS.	Specifications
SQ. or ▯	Square
S.S.	Stainless Steel
SSP	Standard Steel Pipe
XSP	Extra Strong Steel Pipe
XXSP	Double Extra Strong Steel Pipe
STAGG	Staggered
STD.	Standard
STIFF.	Stiffener
STL.	Steel
T&B	Top and Bottom
T.&G.	Tounge and Groove
TN	Toe Nail
T.O.C.	Top of Concrete or Top of Curb
T.O.S.	Top of Steel
TS	Tube Steel
TYP.	Typical
U.N.O.	Unless Noted Otherwise
VERT.	Vertical
V.I.F. or *	Verify In Field
w/	With
w/o	Without

TABLE OF CONTENTS

SHEET	CONTENT
S0.0	STRUCTURAL SPECIFICATIONS ABBREVIATIONS LEGEND SYMBOLS LEGEND & TABLE OF CONTENTS NAILING SCHEDULE DESIGN CRITERIA & SCOPE STANDARD DETAILS
S1.0A	PARTIAL FOUNDATION PLAN BLDG A
S1.1A	ROOF FRAMING PLAN BLDG A
S1.1B	ROOF FRAMING PLAN BLDG B
S1.1C	ROOF FRAMING PLAN BLDG C
S1.1E	ROOF FRAMING PLAN BLDG E
S3.0	RETROFIT DETAILS

SYMBOLS LEGEND

SYMBOL DESCRIPTION

- 1 / S2.1 — Detail No. / Sheet Location
- View Direction; 1 / S0.1 — Section/Elevation No. / Sheet Location
- 1 / 6.0 / S0.2 — Sheathed Face of Wall (Shaded); Shear Wall Type per Schedule; See Detail 1/S0.2; Shear Wall Length (FEET)
- 1 / 6.0 / P / S0.2 — Sheathed Face of Wall (Shaded); Shear Wall Type per Schedule; See Detail 1/S0.2; Pier Length (FEET); Indicates Perforated Shear Wall; See Detail 9/S0.2
- A — Plate Fastening Type per Schedule; See Detail 1/S0.2
- PH2 — Etc... Indicates Pre-Manufactured Proprietary Hardware by Simpson Strong-Tie Inc. Model Number enclosed within Box. See General Notes for approved equal and substitutions.
- 1/4 SLOPE — Indicates Degree of Slope; Indicates Sloped Beam, Slab, or Deck. Arrowhead indicates direction
- 8'-0"± — Indicates estimated dimension. For Exact Dimension see Architect
- Indicates 2x with strut from roof to wall below or from ceiling to roof above
- 1/4 TYP. — Indicates Field Weld, Shop Weld when not shown.; Weld Notes; Weld Type; Weld Size; Weld all sides

Refer to AISC, Latest Edition, for All Weld Types & Symbols

- 1 — Revision Number
- Affected Region due to Current Revision.

GOULD SHOPPING CENTER

CAPITOL EXPRESSWAY
SAN JOSE , CALIFORNIA

KENNETH RODRIGUES & PARTNERS INC.
10 South Third Street, Suite 400
San Jose CA 408 993 0700

CONSULTANT
DUQUETTE ENGINEERING
10 SOUTH THIRD STREET, 1st FLOOR
SAN JOSE, CALIFORNIA 95113
TELEPHONE: 408.494.0944
FACSIMILE: 408.494.9949
WEBSITE: www.duquette-eng.com

REGISTERED PROFESSIONAL ENGINEER STEVEN P. DUQUETTE No. S3019 Exp. 3-31-2005 STRUCTURAL STATE OF CALIFORNIA

KEYMAP

REVISION

	10-31-03	50% PROGRESS PRINT
	5-3-04	RELEASED FOR PLAN CHECK
	5-5-04	ISSUED FOR PRICING
1	9-7-04	CITY PLAN CHECK 1

GRAPHIC SCALE

PROJECT NO. 18.519 DATE 10.31.03
DRAWN BY SCALE N/A

STRUCTURAL SPECIFICATIONS
ABBREVIATIONS LEGEND
SYMBOLS LEGEND

NORTH N TRUE

S0.0

© 2003 KENNETH RODRIGUES & PARTNERS, INC.

DE JOB NUMBER 03-0140

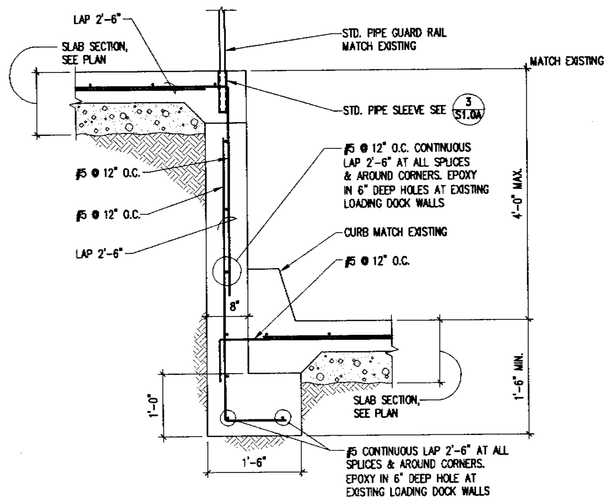

SECTION AT REPLACED LOADING DOCK WALL — SCALE: 3/4" = 1'-0" — 1

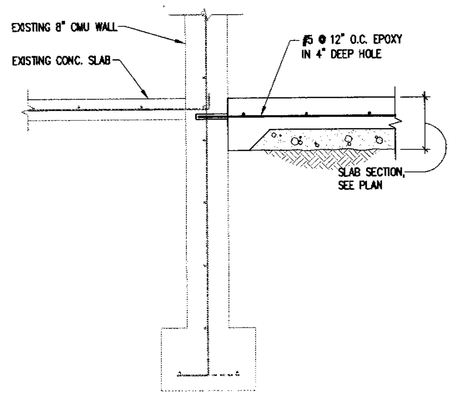

REPLACED LOADING DOCK SECTION AT EXISTING BLOCK WALL — SCALE: 3/4" = 1'-0" — 2

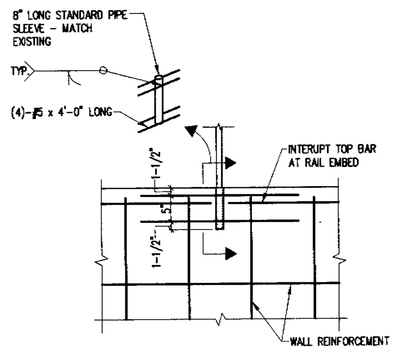

RAIL EMBED DETAIL — SCALE: 3/4" = 1'-0" — 3

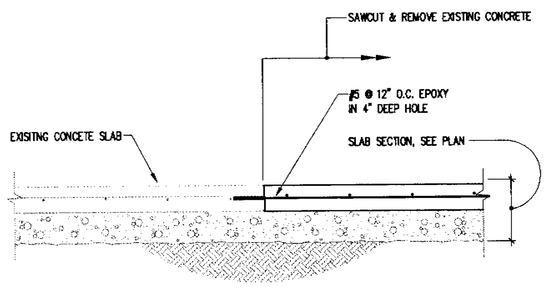

SLAB EDGE DETAIL — SCALE: 3/4" = 1'-0" — 4

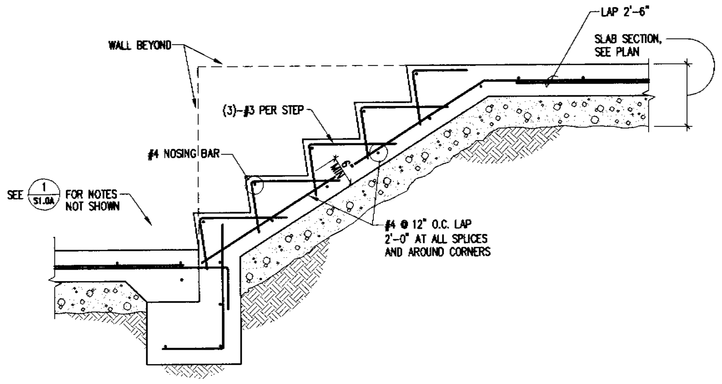

SECTION — SCALE: 3/4" = 1'-0" — 5

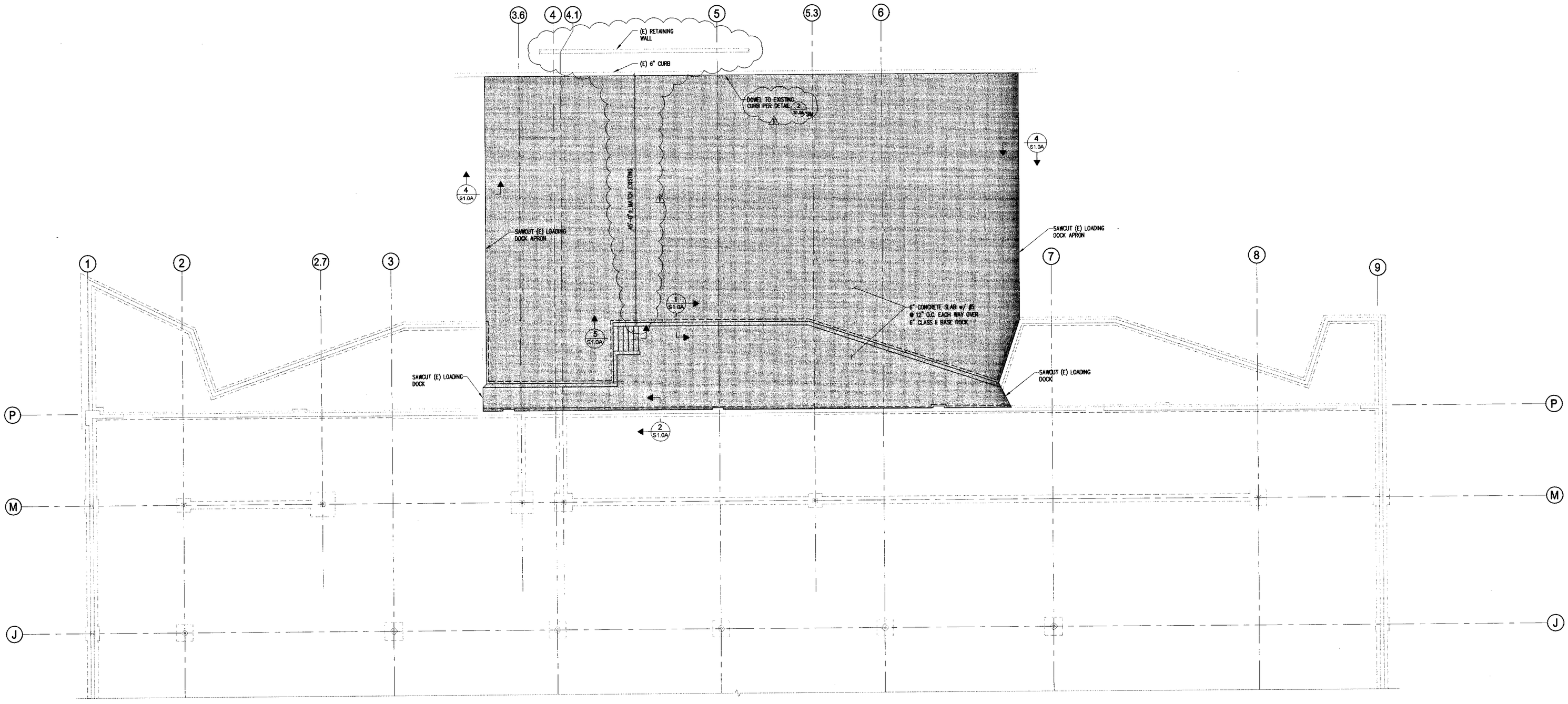

FOUNDATION PLAN - BUILDING A — SCALE: 1/8" = 1'-0"

FOUNDATION NOTES :

1. INDICATES NEW FOUNDATION
2. INDICATES EXISTING FOUNDATION

GOULD SHOPPING CENTER

CAPITOL EXPRESSWAY
SAN JOSE , CALIFORNIA

KENNETH RODRIGUES & PARTNERS INC.
10 South Third Street, Suite 400
San Jose, CA 408.993.0700

CONSULTANT
DUQUETTE ENGINEERING
10 SOUTH THIRD STREET, 1st FLOOR
SAN JOSE, CALIFORNIA 95113
TELEPHONE: 408.494.0944
FACSIMILE: 408.494.0946
WEBSITE: www.duquette-eng.com

REGISTERED PROFESSIONAL ENGINEER — KEVIN P. DUQUETTE — No. S3019 — Exp. 3-31-2005 — STRUCTURAL — STATE OF CALIFORNIA

KEYMAP

REVISION

	10-31-03	50% PROGRESS PRINT
	5-3-04	RELEASED FOR PLAN CHECK
	5-5-04	ISSUED FOR PRICING
1	9-7-04	CITY PLAN CHECK 1

GRAPHIC SCALE

PROJECT NO.	18.519	DATE	10.31.03
DRAWN BY		SCALE	AS NOTED

FOUNDATION PLAN
BUILDING A

NORTH — TRUE

S1.0A

© 2003 KENNETH RODRIGUES & PARTNERS, INC.

DE JOB NUMBER 03-0140

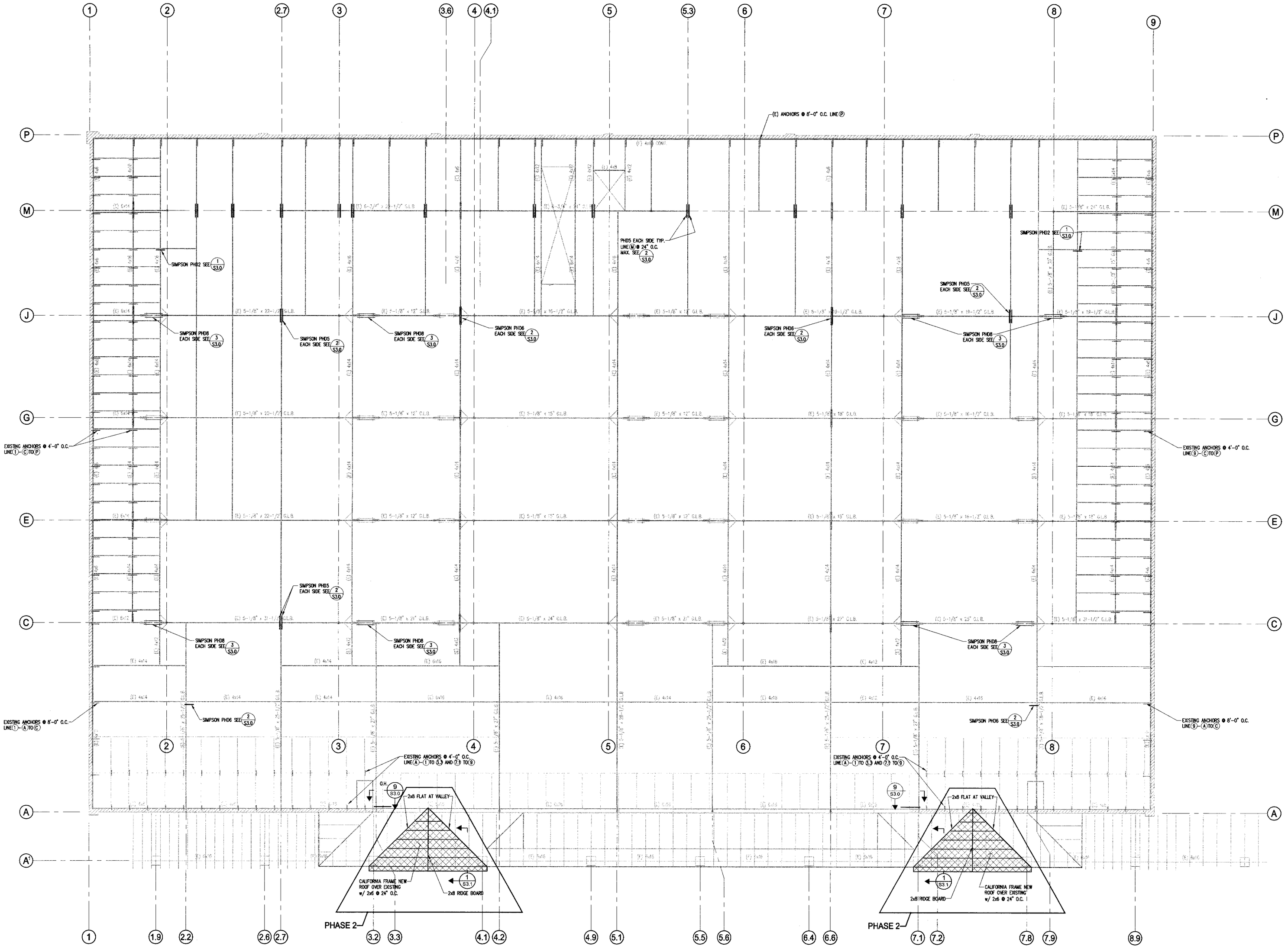

ROOF FRAMING PLAN - BUILDING A

SCALE: 1/8" = 1'-0"

GOULD SHOPPING CENTER

CAPITOL EXPRESSWAY
SAN JOSE, CALIFORNIA

KENNETH RODRIGUES & PARTNERS INC.
10 South Third Street, Suite 400
San Jose, CA 408.993.0700

CONSULTANT
DUQUETTE ENGINEERING
10 SOUTH THIRD STREET, 1st FLOOR
SAN JOSE, CALIFORNIA 95113
TELEPHONE: 408.404.0944
FACSIMILE: 408.404.0948
WEBSITE: www.duquette-eng.com

REGISTERED PROFESSIONAL ENGINEER
DON F. DUQUETTE
No. S3019
Exp. 3-31-2005
STRUCTURAL
STATE OF CALIFORNIA

KEYMAP

REVISION

	10-31-03	50% PROGRESS PRINT
	5-3-04	RELEASED FOR PLAN CHECK
	5-5-04	ISSUED FOR PRICING
1	9-7-04	CITY PLAN CHECK 1

GRAPHIC SCALE

PROJECT NO.	18.519	DATE	10.31.03
DRAWN BY		SCALE	AS NOTED

ROOF FRAMING PLAN
BUILDING A

NORTH
TRUE

S1.1A

© 2003 KENNETH RODRIGUES & PARTNERS, INC.

DE JOB NUMBER 03-0140

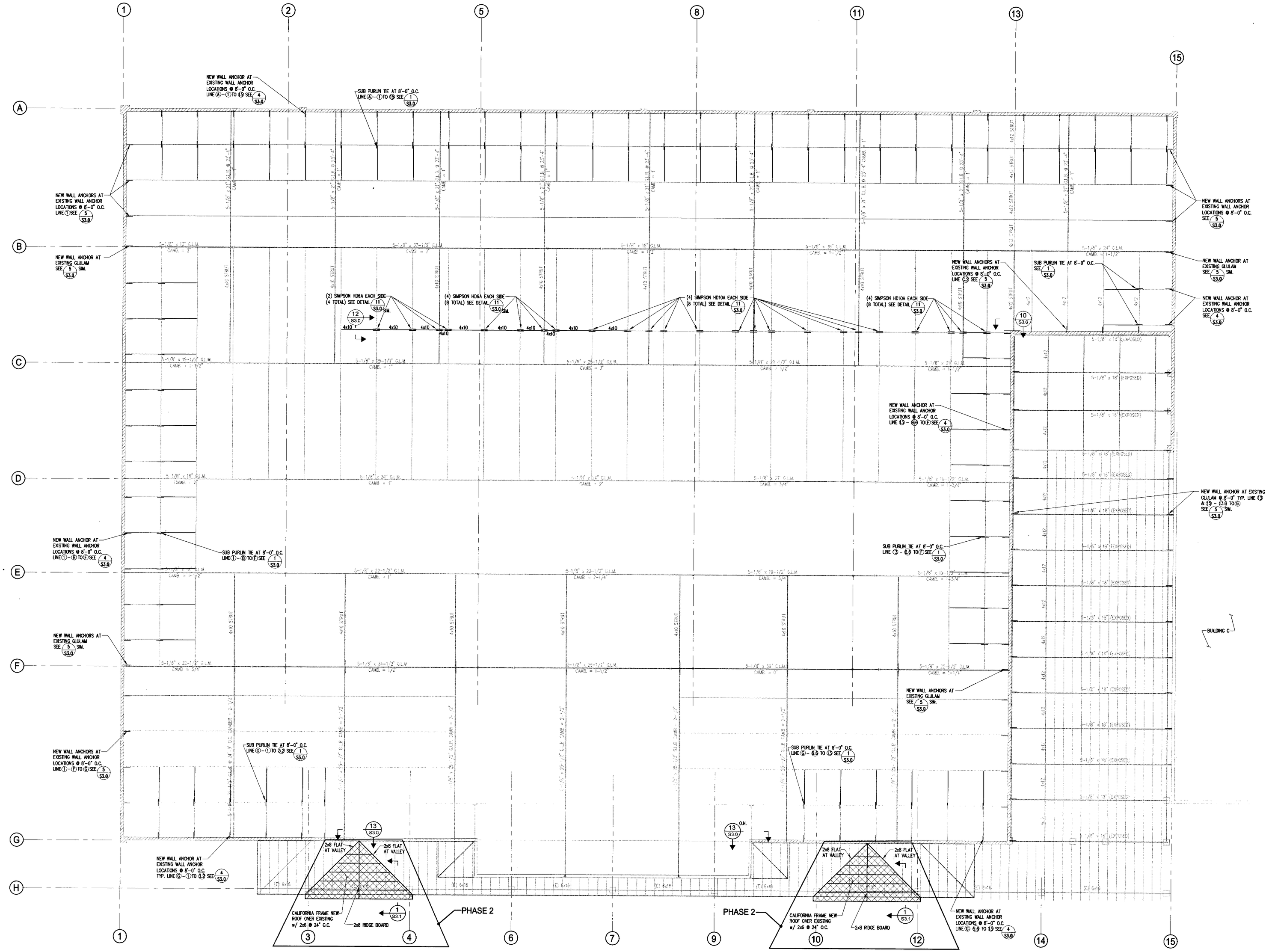

ROOF FRAMING PLAN - BUILDING B

SCALE: 1/8" = 1'-0"

GOULD SHOPPING CENTER

CAPITOL EXPRESSWAY
SAN JOSE , CALIFORNIA

KENNETH RODRIGUES & PARTNERS INC
10 South Third Street, Suite 400
San Jose CA 408 993 0700

CONSULTANT
DUQUETTE ENGINEERING
19 SOUTH THIRD STREET, 1st FLOOR
SAN JOSE, CALIFORNIA 95113
TELEPHONE: 408.494.0944
FACSIMILE: 408.494.0940
WEBSITE: www.duquette-eng.com

REGISTERED PROFESSIONAL ENGINEER
STEVEN P. DUQUETTE
No. S3019
Exp. 3-31-2005
STRUCTURAL
STATE OF CALIFORNIA

KEYMAP

REVISION

	10-31-03	50% PROGRESS PRINT
	5-3-04	RELEASED FOR PLAN CHECK
	5-5-04	ISSUED FOR PRICING
1	9-7-04	CITY PLAN CHECK 1

GRAPHIC SCALE

PROJECT NO.	18.519	DATE	10.31.03
DRAWN BY		SCALE	AS NOTED

ROOF FRAMING PLAN
BUILDING B

NORTH N TRUE

S1.1B

© 2003 KENNETH RODRIGUES & PARTNERS, INC.

DE JOB NUMBER 03-0140

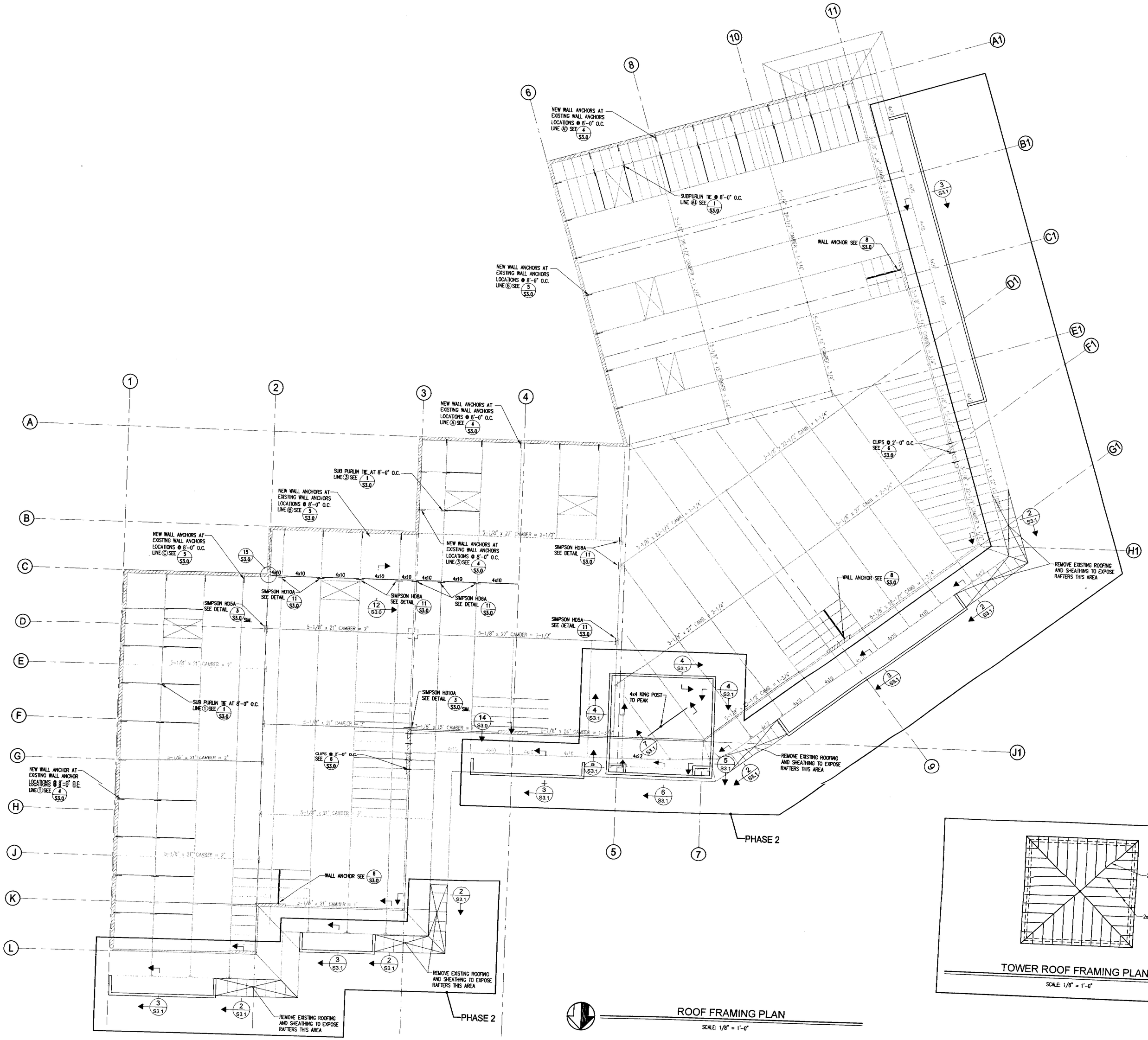

GOULD SHOPPING CENTER

CAPITOL EXPRESSWAY
SAN JOSE , CALIFORNIA

KENNETH RODRIGUES & PARTNERS INC
10 South Third Street, Suite 400
San Jose, CA 408.993.0700

CONSULTANT
DUQUETTE ENGINEERING
10 SOUTH THIRD STREET, 1st FLOOR
SAN JOSE, CALIFORNIA 95113
TELEPHONE: 408.494.0944
FACSIMILE: 408.494.0940
WEBSITE: www.duquette-eng.com

REGISTERED PROFESSIONAL ENGINEER
OLIVER P. DUQUETTE
No. S3019
Exp. 3-31-2005
STRUCTURAL
STATE OF CALIFORNIA

KEYMAP

REVISION

	10-31-03	50% PROGRESS PRINT
	5-3-04	RELEASED FOR PLAN CHECK
	5-5-04	ISSUED FOR PRICING
1	9-7-04	CITY PLAN CHECK 1

GRAPHIC SCALE

PROJECT NO	18.519	DATE	10.31.03
DRAWN BY		SCALE	AS NOTED

ROOF FRAMING PLAN
TOWER ROOF FRAMING PLAN

NORTH N TRUE

S1.1C

© 2003 KENNETH RODRIGUES & PARTNERS, INC.

DE JOB NUMBER 03-0140

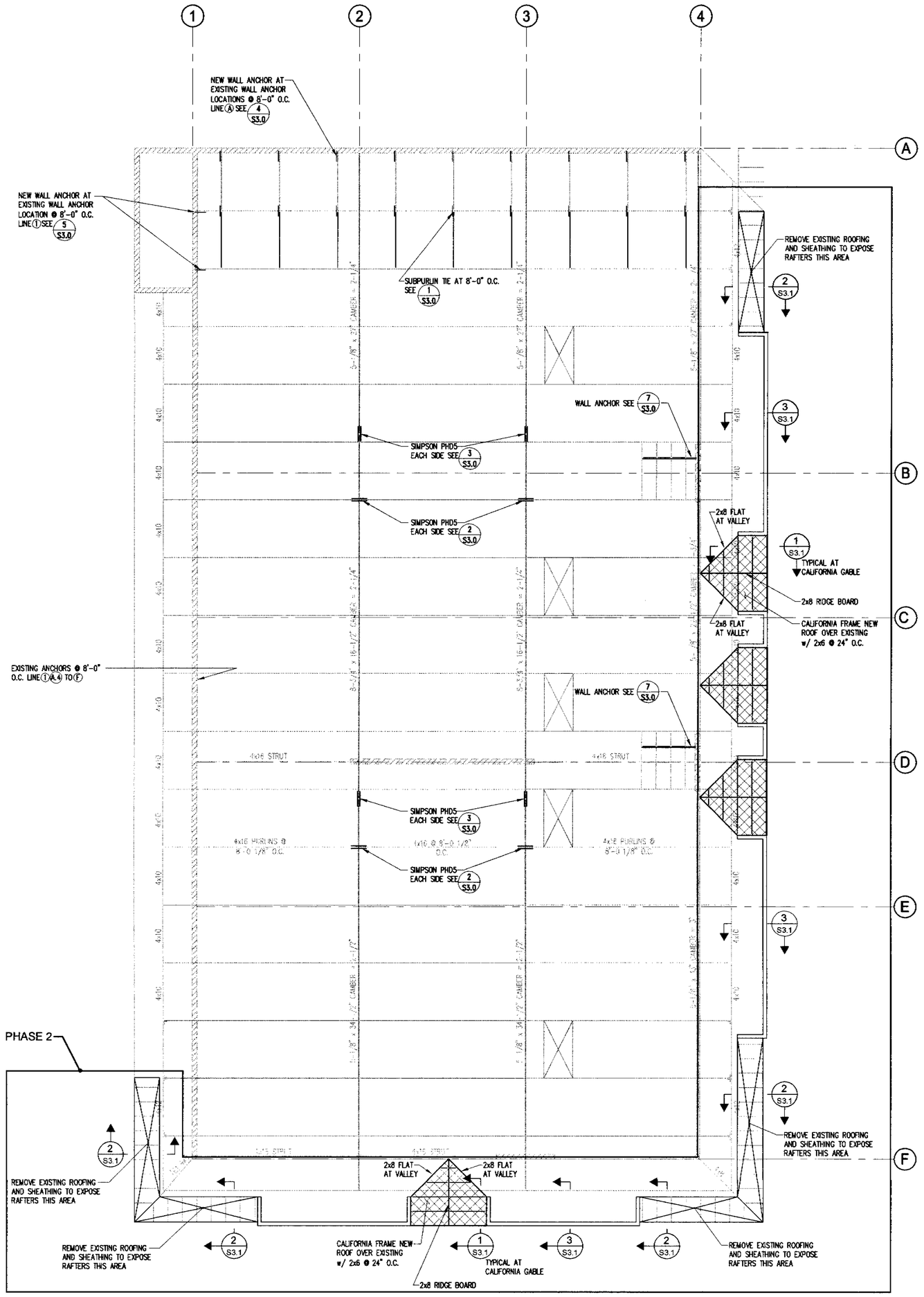

ROOF FRAMING PLAN - BUILDING E

SCALE: 1/8" = 1'-0"

GOULD SHOPPING CENTER

CAPITOL EXPRESSWAY
SAN JOSE , CALIFORNIA

KENNETH RODRIGUES & PARTNERS INC.
10 South Third Street, Suite 400
San Jose, CA 408 993.0700

CONSULTANT
DUQUETTE ENGINEERING
10 SOUTH THIRD STREET, 1st FLOOR
SAN JOSE, CALIFORNIA 95113
TELEPHONE: 408.494.0944
FACSIMILE: 408.494.0940
WEBSITE: www.duquette-eng.com

REGISTERED PROFESSIONAL ENGINEER
STEVEN R. DUQUETTE
No. S3019
Exp. 3-31-2005
STRUCTURAL
STATE OF CALIFORNIA

KEYMAP

REVISION

	10-31-03	50% PROGRESS PRINT
	5-3-04	RELEASED FOR PLAN CHECK
	5-5-04	ISSUED FOR PRICING
1	9-7-04	CITY PLAN CHECK 1

GRAPHIC SCALE

PROJECT NO.	18.519	DATE	10.31.03
DRAWN BY		SCALE	AS NOTED

ROOF FRAMING PLAN
BUILDING E

NORTH
N
TRUE

S1.1E

© 2003 KENNETH RODRIGUES & PARTNERS, INC.

DE JOB NUMBER 03-0140

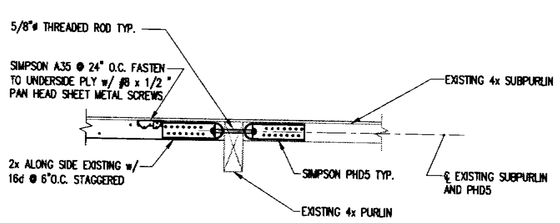

SECTION AT SUBPURLIN TIE (1)
SCALE: 3/4" = 1'-0"

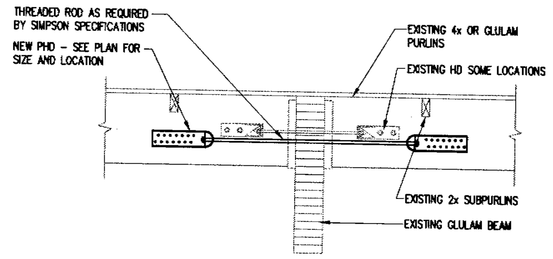

SECTION AT PURLIN TIE (2)
SCALE: 3/4" = 1'-0"

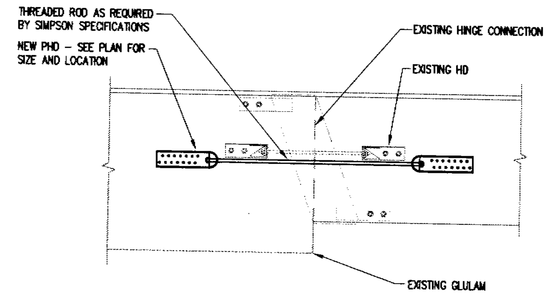

SECTION AT GLULAM HINGE (3)
SCALE: 3/4" = 1'-0"

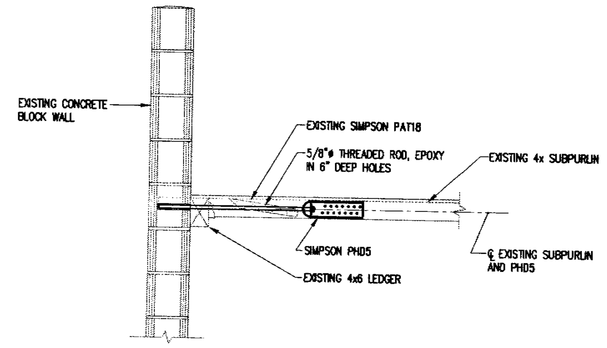

NEW WALL ANCHOR AT EXISTING 4x SUBPURLIN (4)
SCALE: 3/4" = 1'-0"

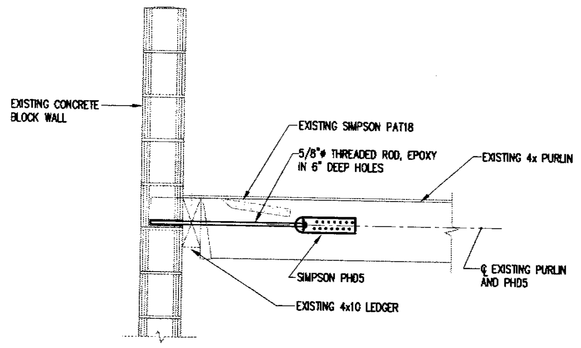

NEW WALL ANCHOR AT EXISTING 4x PURLIN (5)
SCALE: 3/4" = 1'-0"

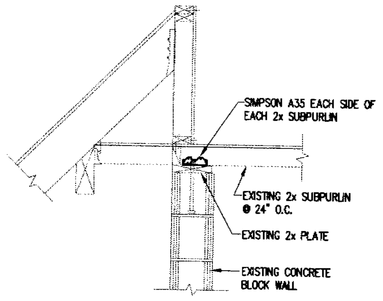

NEW CLIP WALL ANCHOR AT EXISTING 2x SUBPURLINS (6)
SCALE: 3/4" = 1'-0"

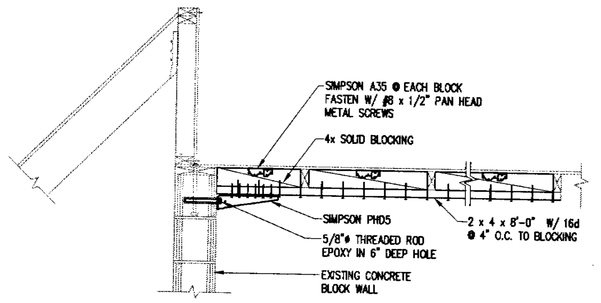

NEW WALL ANCHOR ⊥ TO EXISTING 2x SUBPURLINS (7)
SCALE: 3/4" = 1'-0"

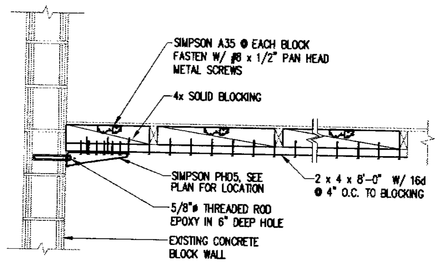

NEW WALL ANCHOR BIULDING C - LINE (F), (G1), (K) AND (11) (8)
SCALE: 3/4" = 1'-0"

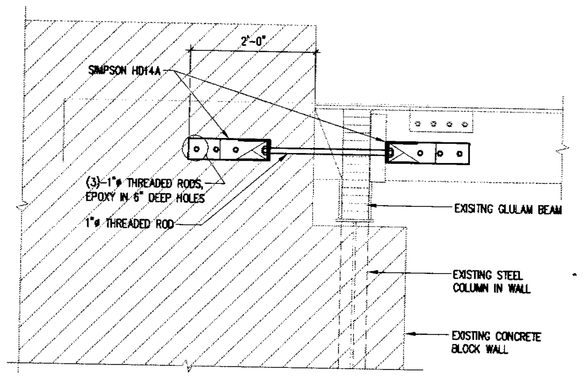

COLLECTOR BUILDING A - LINE (A) (9)
SCALE: 3/4" = 1'-0"

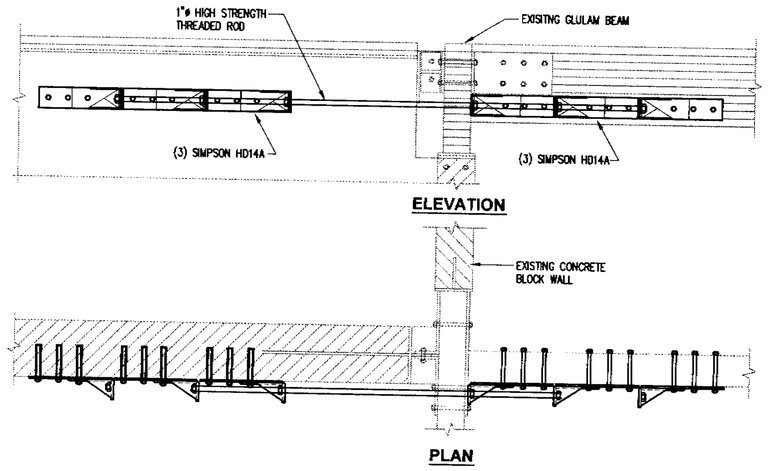

COLLECTOR BUILDING B - LINE (3.7) AND (13) (10)
SCALE: 3/4" = 1'-0"

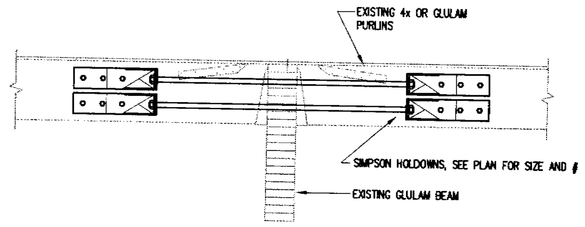

COLLECTOR BUILDING B - LINE (B.7)
BUILDING C - LINE (C) AND (5) (11)
SCALE: 3/4" = 1'-0"

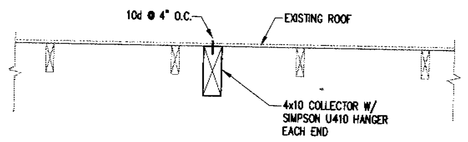

COLLECTOR BUILDING B - LINE (B.7) (12)
SCALE: 3/4" = 1'-0"

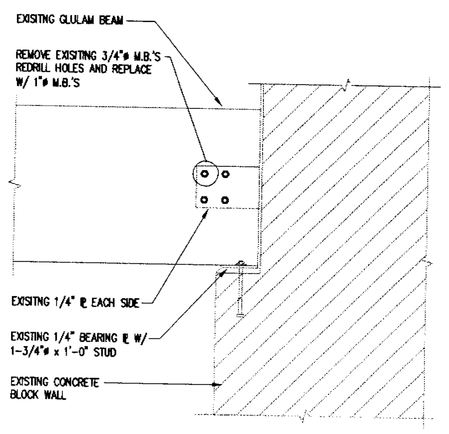

COLLECTOR BUILDING B - LINE (G) (13)
SCALE: 3/4" = 1'-0"

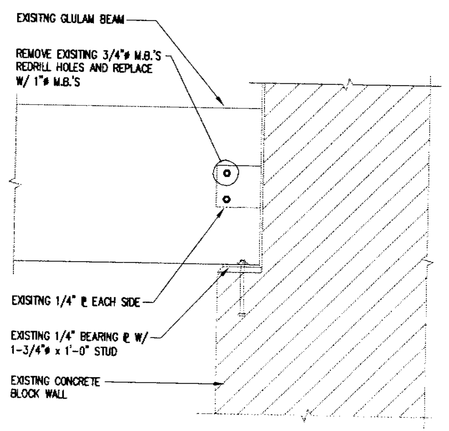

COLLECTOR BUILDING C - LINE (G) (14)
SCALE: 3/4" = 1'-0"

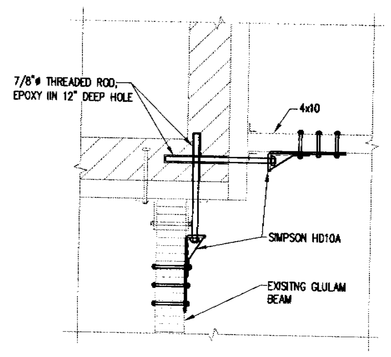

COLLECTOR BUILDING C - LINE (2) (15)
SCALE: 3/4" = 1'-0"

GOULD SHOPPING CENTER

CAPITOL EXPRESSWAY
SAN JOSE , CALIFORNIA

KENNETH RODRIGUES & PARTNERS INC.
10 South Third Street, Suite 400
San Jose, CA 408.993.0700

CONSULTANT
DUQUETTE ENGINEERING
10 SOUTH THIRD STREET, 1st FLOOR
SAN JOSE, CALIFORNIA 95113
TELEPHONE: 408.494.0944
FACSIMILE: 408.494.0946
WEBSITE: www.duquette-eng.com

REGISTERED PROFESSIONAL ENGINEER
STEVEN P. DUQUETTE
No. S3019
Exp. 3-31-2005
STRUCTURAL
STATE OF CALIFORNIA

KEYMAP

REVISION

	10-31-03	50% PROGRESS PRINT
	5-3-04	RELEASED FOR PLAN CHECK
	5-5-04	ISSUED FOR PRICING
1	9-7-04	CITY PLAN CHECK 1

GRAPHIC SCALE

PROJECT NO. 18.519 DATE 10.31.03
DRAWN BY: SCALE AS NOTED

RETROFIT DETAILS

NORTH N TRUE

S3.0

© 2003 KENNETH RODRIGUES & PARTNERS, INC.

DE JOB NUMBER 03-0140