City of San Jose - Building Division - Index Cover

Address 3144 S. Bascom Ave

PLAN CHECK NO. _____ **PERMIT NO.** 06-023756

Prepared By AD **Page #** _____ **Date** Aug 17, 2006

Category	Document Type	Sub Document Type
☐ MP Tracts	☐ TB Planning Permit	
	☐ PP Plot Plans	
	☐ TP Tract Plans	☐ PN Planning ☐ BD Building ☐ PB Plumbing ☐ MM Mechanical ☐ EE Electrical
	☐ TD Supporting Documents	
	☐ TC Structural Calculations	
	☐ TN Energy Calculations	
	☐ TS Soils Report	
	☐ TT Trusses/Shop Drawings	
	☐ TM Tract Map	☐ AR Addressed
☒ PL Plans	☐ PI Planing Permit	
	☒ EP Plans	☐ PA Planning ☒ BL Building ☐ BP Plumbing ☐ BM Mechanical ☐ BE Electrical
	☐ PM Parcel Map	
	☐ SC Structural Calculations	
	☐ EC Energy Calculations	
	☐ SD Supporting Documents	
	☐ SR Soils Report	
	☐ TR Trusses/Shop Drawing	
	☐ CR Copy Request	
☐ PT Permits	☐ AD Addressing	
	☐ IN Inspection Notices	☐ EP Expired
	☐ PR Permits & Applications	☐ CC Cash Receipts / Refunds ☐ CO C of O ☐ CP Correspondence ☐ EX Expired / Voided ☐ FI Finals ☐ IN Initial ☐ IS Initial – Supporting Doc's ☐ MR Meter Releases ☐ SI Special Inspection Reports
	☐ CF Compliance Files	☐ CN Compliance Notices ☐ RS Rescind ☐ SW Stop Work Orders
	☐ DR Damage Reports	☐ ED Earthquake Damage ☐ FD Flood Damage ☐ FA Fire/Auto Survey

Rev. 4/30/02

PROJECT GENERAL NOTES

1. ALL WORK SHALL CONFORM TO THE 2001 EDITION OF THE CALIFORNIA BUILDING CODE (W/CA ADMENDMENTS) AND ALL OTHER APPLICABLE CODES, STANDARDS, AND REGULATIONS OF THE CITY OF SAN JOSE AND COUNTY OF SANTA CLARA.
2. A COMPLETE PROJECT IS INTENDED, THE BUILDING IS TO BE READY FOR OCCUPANCY WHEN COMPLETED.
3. THE GENERAL CONDITIONS OF THE CONTRACT FOR CONSTRUCTION (A.I.A. LATEST EDITION) ARE A PART OF THESE CONTRACT DOCUMENTS. A COPY IS ON FILE AT THE ARCHITECT'S OFFICE.
4. THIS BUILDING HAS BEEN DESIGNED TO COMPLY WITH THE CURRENT CALIFORNIA NON-RESIDENTIAL ENERGY CONSERVATION STANDARDS, DIVISION 4. THE COMPLIANCE FORMS ARE PART OF THESE CONTRACT DOCUMENTS AND THE CONTRACTOR IS RESPONSIBLE FOR CARRYING OUT SPECIFIED REQUIREMENTS.
5. DRAWINGS ARE BASED ON A SURVEY DATED JULY 20, 2005, PREPARED BY SKW AND ASSOCIATES AND ARE INCLUDED AS PART OF THESE CONTRACT DOCUMENTS.
6. THIS BUILDING HAS BEEN DESIGNED IN ACCORDANCE WITH THE RECOMMENDATIONS OF A GEOTECHNICAL INVESTIGATION, DATED MARCH 3, 2006, PREPARED BY NEIL O. ANDERSON & ASSOCIATES INC. THIS REPORT IS PART OF THESE CONTRACT DOCUMENTS. THE CONTRACTOR IS RESPONSIBLE FOR CARRYING OUT ITS RECOMMENDATIONS, THOUGH SOME MAY NOT BE SPECIFICALLY DETAILED ON THE PLANS.
7. DO NOT SCALE OFF THESE DRAWINGS. VERIFY ALL DIMENSIONS AND CONDITIONS IN THE FIELD. ANY DISCREPANCIES IN THESE DRAWINGS SHALL BE BROUGHT TO THE ATTENTION OF THE ARCHITECT PRIOR TO STARTING WORK.
8. ALL PROPOSED SUBSTITUTIONS SHALL BE APPROVED BY THE CONSTRUCTION MANAGER/OWNER, IN WRITING, PRIOR TO BID SUBMITTAL AND INSTALLATION.
9. NO "SPECIAL INSPECTIONS" ARE REQUIRED PER CBC, CHAPTER 17. HOWEVER, GC SHALL RETAIN THE PROJECT GEOTECHNICAL ENG'R TO PROVIDE OBSERVATION AND TESTING SERVICES DURING THE GRADING (INCLUDING UTILITY TRENCHES) AND FOUNDATION PHASES OF CONSTRUCTION– AS RECOMMENDED IN THE SOILS REPORT. ALL TESTING AND INSPECTION REPORTS, INCLUDING DEP'T AND OWNER PRIOR TO FINAL INSPECTION. GC SHALL CERTIFY PAD ELEVATION PRIOR TO THE START OF ANY WORK.
10. G.C. IS RESPONSIBLE FOR SUBMITTAL, PAYING FEES AND OBTAINING ALL PERMITS ASSOCIATED WITH THE PROJECT EXCEPT GENERAL BUILDING PERMIT OR CALTRANS, (IF APPLICABLE). THIS INCLUDES, BUT IS NOT LIMITED TO ELECTRICAL, MECHANICAL, PLUMBING, FIRE SPRINKLER, HOOD ANSUL, OR OTHER RELATED FIRE PERMITS, ENCROACHMENT PERMIT, ETC. OWNER WILL PAY "CONNECTION FEES" ASSOCIATED WITH UTILITY PERMITS. G.C. TO OBTAIN TEMPORARY FACILITIES FEES & BONDS TO COMPLETE THE WORK IN A TIMELY MANNER.
11. G.C. SHALL COMPLY WITH ALL CITY APPROVED PERMIT "CONDITIONS OF APPROVAL" RELATING TO THE CONSTRUCTION OF THIS PROJECT. THESE CONDITIONS SHALL BE PART OF THESE CONTRACT DOCUMENTS.
12. UON, THE FOLLOWING STANDARDS ARE UTILIZED TO ACHIEVE THE STRUCTURAL DESIGN CRITERIA LISTED IN THESE CONSTRUCTION DOCUMENTS:
    REFER TO GEOTECHNICAL REPORT FOR ALLOWABLE SOIL BEARING PRESSURES.
    USE fc' = 3000 P.S.I. MIN. FOR FOOTINGS & INTERIOR CONCRETE (DESIGN fc'= 2500 P.S.I.)
    USE fc'= 3000 P.S.I. MIN. FOR CONCRETE FLATWORK, PAVING, ETC. EXPOSED TO WEATHER (DESIGN fc'=2500 P.S.I.)
13. CONTRACTOR SHALL BE RESPONSIBLE FOR CONSTRUCTION METHODS AND MATERIALS, PROTECTING ALL EXISTING IMPROVEMENTS, PUBLIC SAFETY, SITE AND MATERIALS SECURITY, AND CONSTRUCTION OF THE BUILDING IN ACCORDANCE WITH APPROVED PLANS AND PERMIT.
14. GC SHALL SUBMIT TRUSS SHOP DRAWINGS TO THE PROJECT ARCHITECT OR ENGINEER FOR REVIEW AND COORDINATION. REFER TO STRUCT. DRAWINGS FOR SPECIFIC TRUSS DESIGN AND SUBMITTAL REQUIREMENTS. FABRICATION SHALL NOT COMMENCE UNTIL SHOP DRAWINGS HAVE BEEN REVIEWED BY THE PROJECT ARCHITECT AND APPROVED BY THE CITY.
15. A SEPERATE PERMIT IS REQUIRED FOR HOOD/ANSUL SYSTEMS. ANSUL INSTALLER SHALL PROVIDE PLANS FOR REVIEW & APPROVAL TO THE CITY OF SACRAMENTO FIRE DISTRICT.
16. OBTAIN APPROVAL FROM THE FIRE DEPARTMENT ON USE OF "FIREMASTER" DUCT WRAP, IN LIEU OF 1-HOUR SHAFT.
17. NOT USED
18. DEFERRED SUBMITTALS(DRAWINGS & CALCULATIONS) TO BE SUBMITTED BY GC TO THE PROJECT ARCHITECT FOR REVIEW:
    A. TRUSSES–
       ARCHITECT OR ENGINEER OF RECORD IS RESPONSIBLE FOR REVIEWING AND COORDINATING ALL SUBMITTAL DOCUMENTS PREPARED BY OTHERS. A "REVIEWED" STAMP SHALL BE PLACED ON THE TITLE SHEET OF SUCH DOCUMENTS PRIOR TO PERMIT SUBMITTAL.
    B. HOOD SUPPRESSION SYSTEM–
       DESIGN FOR THE HOOD SUPPRESSION SYSTEM SHALL BE SUBMITTED TO AND REVIEWED BY THE FIRE DEPARTMENT PRIOR TO INSTALLATION.
19. IT IS THE GC'S RESPONSIBILITY TO CONFIRM THE AVAILABLE RESIDUAL WATER PRESSURE, PRIOR TO THE START OF ANY WORK, AND NOTIFY THE OWNER IF THE AVAILABLE PRESSURE IS NOT ADEQUATE TO SERVICE THE ANSUL SYSTEM OR OTHER PRESSURE SENSITIVE EQUIPMENT.
20. SIGNAGE AND NEON SHALL BE APPLIED FOR, BY THE OWNER'S VENDOR, UNDER A SEPERATE PERMIT APPLICATION.
20. NOTE: AWNINGS WILL BE ISSUED UNDER A SEPARATE PERMIT.

CITY OF SAN JOSE BUILDING DIVISION
APPROVED PLAN SET
(✓) OFFICE SET ( ) FIELD SET
ADDRESS 3144 S. BASCOM AVE
PERMIT No. ____ DATE: / / /
P.C. No. 06-0095 19 DATE 7 18 106
CODE EDITIONS: CBC UMC UPC '01 NEC ___ ENERGY ___ DA ✓
OCCUPANCY GROUPS(S) A3 TYPE OF CONSTRUCTION VN

PLANS APPROVED FOR:	CHECKED BY	APPROVED BY
(✓) BUILDING NON STRUCT	PE	PE
(✓) BUILDING STRUCT	PE	PE
( ) ELECTRICAL		
( ) PLUMBING		
( ) MECHANICAL		
( ) FIRE		
( ) OTHER		
( ) ZONING	PLANNING PERMIT #	

COMMENTS
TRUSSES ARE DEFERRED SUBMITTAL

REQUIRED INSPECTIONS IN ADDITION TO BUILDING DIVISION INSPECTIONS
SPECIAL INSPECTION REQUIRED ( ) YES ( ) NO
STRUCTURAL OBSERVATION ( ) YES ( ) NO
SOILS ENGINEER INSPECTION REQ'D ( ) YES ( ) NO
COMPACTION REPORT REQ'D ( ) YES ( ) NO
FLOOD ELEVATION CERT. REQ'D ( ) YES ( ) NO
PUBLIC WORKS INSPECTION REQ'D ( ) YES ( ) NO
FIRE DEPT INSPECTION REQ'D ( ) YES ( ) NO
COMMENTS

SYMBOLS

ROOM NAME
ROOM NUMBER
ELEV. NO.
INT. ELEV. SHEET
CEILING HEIGHT
BLDG. SECTION LETTER
BLDG. SECTION SHEET
DETAIL NUMBER
DIRECTION OF DETAIL
DETAIL SHEET
PLUMBING EQUIPMENT ITEM NO.
REVISION NUMBER
DOOR NUMBER
WINDOW NUMBER
EXTERNAL WALL FINISH NUMBER
SHEAR WALL TYPE
FRAMING HEADER NUMBER
KEYNOTE
EQUIPMENT NUMBER
EQUIPMENT ROUGH-IN CONNECTION, NUMBER
BLDG. HEIGHT REFERENCE POINT

ABBREVIATIONS

A.B.	ANCHOR BOLT	F.P.	FIRE PROOF	REQ'D.	REQUIRED
A.T.	ACOUSTICAL TILE	FLASH	FLASHING	RET.	RETURN
ADJ.	ADJUSTIBLE	FLR.	FLOOR	R.A.	RETURN AIR
A.F.F.	ABOVE FINISH FLOOR	F.D.	FLOOR DRAIN	REV.	REVERSE
A.C.	ASPHALTIC CONCRETE	F.S.	FLOOR SINK	RCP	REFLECTED CEILING PLAN
ANOD.	ANODIZED	FTG.	FOOTING	R.D.	ROOF DRAIN
ALUM/AL	ALUMINUM	FDN.	FOUNDATION	ROOF'G.	ROOFING
APPROX.	APPROXIMATE	GA.	GAUGE	RM.	ROOM
BD.	BOARD	G.C.	GENERAL CONTRACTOR	R.O.	ROUGH OPENING
BM.	BEAM	GEN.	GENERAL	R.R.	RESTROOM
BLK.	BLOCK	G.I.	GALVANIZED IRON	S.A.D.	SEE ARCHITECTURAL DRAWINGS
BLK'G.	BLOCKING	GL.	GLASS; GLAZING; GLAZED	S.E.	SATIN ENAMEL
BOT.	BOTTOM	GR.	GRADE	SCHED.	SCHEDULE
BLDG	BUILDING	GYP.	GYPSUM	SECT.	SECTION
BIN.	BOUNDARY NAIL	HDWE	HARDWARE	S.G.E.	SEMI-GLOSS ENAMEL
CAB.	CABINET	H.D.	HUB DRAIN	SHT'G.	SHEATHING
CLG.	CEILING	HT.	HEIGHT	SHT.	SHEET
CEM.	CEMENT	H.M.	HOLLOW METAL	SIM.	SIMILAR
C.F.	CURB FACE	HORIZ.	HORIZONTAL	SK.	SINK
℄	CENTERLINE	I/F	INTERFACE	S.D.	SOAP DISPENSER
C.T.	CERAMIC TILE	INS.	INSULATE; INSULATION	SOL.	SOLID
CLR.	CLEAR	INT.	INTERIOR	SPECS.	SPECIFICATIONS
COL.	COLUMN	JNT.	JOINT	SQ.	SQUARE
CONC.	CONCRETE	JST.	JOIST	S.S.	S/S STAINLESS STEEL
C.B.	CONCRETE BLOCK	LAM.	LAMINATE; LAMINATED	S.S.D.	SEE STRUCTURAL DRAWINGS
CONST.	CONSTRUCTION	LTG.	LIGHTING	STD.	STANDARD
CONT.	CONTINUOUS	MFR.	MANUFACTURER	STL.	STEEL
C.J.	CONTRACTION OR CONTROL JOINT	MAT'L.	MATERIAL	STOR.	STORAGE
CONTR.	CONTRACTOR	MAX.	MAXIMUM	ST.	STREET; STRAIN
CORR.	CORRIDOR	MECH.	MECHANICAL	STRUCT.	STRUCTURAL
CTRD.	CENTERED	MEMB.	MEMBRANE	SUSP.	SUSPEND; SUSPENDED
DP.	DEEP	MET/MTL	METAL	SW.	SWITCH
DET.	DETAIL	M.L.	METAL LATH	SYS.	SYSTEM
DIAG.	DIAGONAL	MIN.	MINIMUM	TEL.	TELEPHONE
DIA.	DIAMETER	MISC.	MISCELLANEOUS	THST.	THERMOSTAT
DIM.	DIMENSION	MLDG.	MOULDING	THK.	THICK
DR.	DOOR	N.I.C.	NOT IN CONTRACT	THRU.	THROUGH
DBL.	DOUBLE	N.T.S.	NOT TO SCALE	TOIL.	TOILET
DN.	DOWN	NO.	NUMBER	T.C.	TOP OF CURB
D.S.	DIRECTIONAL SIGN	O	OWNER	T.P.	TOP OF PAVING
DT.	DRIVE-THRU	OFF.	OFFICE	T.R.	TOP OF ROOF
DWG.	DRAWING	O.C.	ON CENTER	T.P.	TOP OF PARAPET
EA.	EACH	OFCI	OWNER FURNISHED CONT'R INSTALLED	T.S.	TOP OF SLAB
E.S.	EACH SIDE	OPN'G.	OPENING	T.W.	TOP OF WALL
E.I.F.S.	EXTERIOR INSULATION & FINISH SYSTEM	OPP.	OPPOSITE	T.S.B.	TOP SET BASE
ELEC.	ELECTRICAL	O.A.	OVERALL	T.	TREAD
E.P.	ELECTRICAL PANEL	O.A.H.	OVERALL HEIGHT	T.S.	TUBULAR STEEL
EL.	ELEVATION (GRADE)	O.H.	OVERHEAD	TYP.	TYPICAL
ELEV.	ELEVATION (BLDG)	P.C.C.	PORTLAND CEMENT CONCRETE	U.L.	UNDERWRITING LABORATORIES
E.N.	EDGE NAIL	P.E.N	PERIMETER EDGE NAIL	UNFIN.	UNFINISHED
ENCL.	ENCLOSURE	P.G.	PAINT GRADE	U.O.N.	UNLESS OTHERWISE NOTED
EQUIP.	EQUIPMENT	PR.	PAIR	VENT.	VENTILATE; VENTILATION
EXH.	EXHAUST	PNL	PANEL	VEST.	VESTIBULE
EXIST.	EXISTING	PART.	PARTITION	V.I.F.	VERIFY IN FIELD
EXP.J.	EXPANSION JOINT	PERF.	PERFORATION	V.W.C.	VINYL WALL COVERING
EXPS.	EXPANDED POLYSTYLRENE	PLAS.	PLASTER	W.C.	WATERCLOSET
EXP.	EXPOSED; EXPANSION	PTDF	PRESSURE TREATED DOUGLAS FIR	W.P.	WATERPROOF
EXT.	EXTERIOR	PLYWD.	PLYWOOD	W.W.F.	WELDED WIRE FABRIC
FIN.	FINISH	PROP.	PROPERTY	W.	WIDE; WIDTH
F.R.P.	FIBERGLASS REINFORCED PANEL	P.L.	PROPERTY LINE	W/	WITH
F.F.	FINISH FLOOR	P.V.C.	POLY VINYL CHLORIDE	W/O	WITHOUT
F.E.	FIRE EXTINGUISHER	R.	RISER	WD.	WOOD
F.E.C.	FIRE EXTINGUISHER CABINET	REFR.	REFRIGERATOR	W.I.C.	WALK-IN COOLER
		R.S.	REMOTE SENSOR	W.I.F.	WALK-IN FREEZER
		REINF.	REINFORCING		

PROJECT SUMMARY

SAN JOSE FILE NO.	H05-046
SITE AREA:	23,620 S.F. / 0.54 ACRE
BUILDING CODE:	2001 CBC, CMC, CPC, CEC (W/CALIFORNIA AMENDMENTS)
BUILDING AREA:	2938 S.F.(CONDITIONED)
SEATING	66
SPRINKLERS REQUIRED	NONE
PLANNING ZONE:	COMMERCIAL PEDESTRIAN (C.P.)
OCCUPANCY:	A3
TYPE CONSTRUCTION:	TYPE V-N (NON-SPRINKLERED)
REQUIRED PARKING:	24 STALLS
PROVIDED PARKING:	30 STALLS
ASSESSOR'S PARCEL #:	414-14-075 & 076

DESIGN CRITERIA

WIND SPEED:	80 MPH, EXP. C
EARTHQUAKE ZONE:	ZONE 4
ROOF LOAD:	REFER TO DETAIL 1/S4.2. FOR TRUSS LOADS.
WATER PRESSURE	33 PSI MIN @ BLDG POINT OF ENTRY. GC SHALL CONFIRM MINIMUM RESIDUAL PRESSURE AVAILABLE AT HOOD ANSUL SYSTEM IS 33 PSI.

PROJECT DIRECTORY

OWNER Harman Management Corporation 199 First Street, Suite 212 Los Altos, CA 94022 PH: 650-941-5681 FX: 650-941-5678	ARCHITECT Vincent + Murphy, Inc. Contact: Bob Huntsberry 617 5th Avenue, San Rafael, CA 94901 PH: 415-451-2500 FX: 415-451-2595
CIVIL ENGINEER SKW & Associates Don Kan 2237 Scenic Drive Modesto, CA 95355 PH: 209-523-8323 FX: 209-529-7804	STRUCTURAL ENGINEER SKW & Associates Don Kan 2237 Scenic Drive Modesto, CA 95355 PH: 209-523-8323 FX: 209-529-7804
GEOTECHNICAL ENGINEER Neil O. Anderson Associates Rob Holmer 4221 Northgate Blvd., Suite 6 Sacramento, CA 95834 PH: 916-929-9267 FX: 916-929-9269	LANDSCAPE ARCHITECT Kirk Morton Landscape Architect 37357 Niles Blvd Fremont, CA 94536 PH: 510-792-9193

UTILITY CONTACTS

SEWER/ STORM City of San Jose PW Dev. Services Gary Jansen, Principal Technician 200 E Santa Clara Street San Jose, CA 95113 (O) 408-535-7802	TELEPHONE SBC Pete Kearney, BIC Engineer 3475-B N. First St., Rm. 200 San Jose, CA 95134 408-493-7128
WATER San Jose Water Co. Wanda Folk 1265 S. Bascom Ave. San Jose, CA 95128 (O) 408-279-7879	ELECTRIC PG&E Paul Espinola 308 Stockton Ave. San Jose, CA 95126 408-299-1118
GAS PG&E Paul Espinola 308 Stockton Ave. San Jose, CA 95126 P: 408-299-1118	PUBLIC WORKS City of San Jose PW Dev. Services Andrew Turner O: 408-535-8300 200 E Santa Clara Street San Jose, CA 95113
FIRE City of San Jose Fire Prevention Jerry Smurz 200 E Santa Clara Street San Jose, CA 95113 P:408-535-7750	

VICINITY MAP

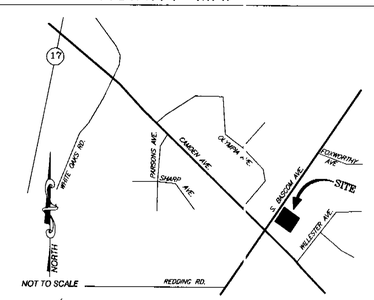

VICINITY MAP

REQUIRED INSPECTIONS IN ADDITION TO BUILDING DIVISION INSPECTIONS
SPECIAL INSPECTION REQUIRED ( ) YES ( ) NO
STRUCTURAL OBSERVATION ( ) YES ( ) NO
SOILS ENGINEER INSPECTION REQ'D (✓) YES ( ) NO
COMPACTION REPORT REQ'D (✓) YES ( ) NO
FLOOD ELEVATION CERT. REQ'D ( ) YES ( ) NO
PUBLIC WORKS INSPECTION REQ'D (✓) YES ( ) NO
FIRE DEPT INSPECTION REQ'D (✓) YES ( ) NO
COMMENTS

SHEET INDEX

TITLE/SITE

T1.0	TITLE SHEET		△
T1.1	DISABLED ACCESS/SANITATION REQ'S		△
T1.2	ENERGY DOCUMENTATION		△
T1.3	ENERGY DOCUMENTATION	△	
T1.4	ENERGY DOCUMENTATION	△	
1 of 1	ALTA/ACSM SURVEY (1 OF 1)		
C1	SITE CIVIL GENERAL NOTES		
C2	SITE PLAN	△	
C2.1	SITE DETAILS	△	
C2.2	SITE DETAILS	△	△
C2.3	SITE DETAILS		
C3	GRADING & DRAINAGE PLAN	△	△
C3.1	DETAILS & SECTIONS		
C4	UTILITY PLAN		
C5	HORIZONTAL CONTROL PLAN		
C6	EROSION CONTROL PLAN		
C7	DEMOLITION PLAN		
OS-1	OFF-SITE IMPROVEMENTS		△
OS-2	OFF-SITE IMPROVEMENTS		△
L1.0	IRRIGATION PLAN		
L1.1	IRRIGATION DETAILS		
L2.0	PLANTING PLAN		
L2.1	PLANTING DETAILS		

STRUCTURAL

S1.0	FOUNDATION PLAN		
S2.0	WALL FRAMING PLAN		△
S3.0	ROOF FRAMING PLAN		△
S4.0	STRUCTURAL DETAILS (FOUNDATION)		
S4.1	STRUCTURAL DETAILS (FRAMING)		
S4.2	STRUCTURAL DETAILS (ROOF)		△
S4.3	STRUCTURAL DETAILS (KFC TOWER)		△
S4.4	NOT USED		
S4.5	NOT USED		
S5.0	CANOPY AND AWNING BLOCKING ELEVATIONS		

ARCHITECTURAL

A1.0	FLOOR PLAN		
A1.1	DOOR & WINDOW ELEVATIONS & SCHEDULES	△	△
A2.0	EQUIPMENT AND SEATING PLAN	△	△
A2.1	EQUIPMENT SCHEDULE		
A3.0	ROOF PLAN	△	
A4.0	EXTERIOR ELEVATIONS	△	△
A4.1	EXTERIOR ELEVATIONS	△	△
A5.0	WALL SECTIONS		
A5.1	WALL SECTIONS		
A5.2	TOWER SECTIONS - KFC	△	
A5.3	TOWER SECTIONS - A&W	△	
A6.0	CONSTRUCTION DETAILS - ROOF	△	
A6.1	CONSTRUCTION DETAILS - DOOR / WINDOW		
A6.2	CONSTRUCTION DETAILS - WALL, DOOR & WINDOW		
A6.3	CONSTRUCTION DETAILS - WALL		
A6.4	CONSTRUCTION DETAILS - INTERIOR		
A6.5	FINISH DETAILS		
A7.0	FLOOR FINISH PLAN		
A7.1	REFLECTED CEILING PLAN	△	
A7.2	FINISH SCHEDULE	△	
A7.3	YUM SPEAK		
A8.0	INTERIOR ELEVATIONS - DINING ROOM		
A8.1	INTERIOR ELEVATIONS, ENLARGED RESTROOM & OFFICE PLAN	△	
A8.2	INTERIOR ELEVATIONS - KITCHEN		△
A8.3	INTERIOR ELEVATIONS - KITCHEN		△

MECHANICAL

M1.0	MECHANICAL SCHEDULES AND NOTES	△	
M2.0	DUCT AND DIFFUSER PLAN	△	
M2.1	MECHANICAL DETAILS		△
M3.1	NOT USED		
M4.0	MECHANICAL & HOOD DETAILS		

HOODS

H1.0	HOOD DETAILS
H2.0	HOOD DETAILS
H3.0	HOOD DETAILS
H4.0	CURB DETAILS

PLUMBING

P1.0	PLUMBING SCHEDULES AND NOTES	△	△
P2.0	WASTE AND VENT PLAN	△	△
P3.0	WATER AND GAS PLAN	△	△
P4.0	PLUMBING ROUGH-IN PLAN		
P5.0	RISER DIAGRAMS	△	△
P6.0	PLUMBING DETAILS	△	△

ELECTRICAL

E1.0	SITE ELECTRICAL PLAN		
E2.0	RISER DIAGRAM AND LEGEND	△	
E2.1	PANEL SCHEDULES AND LOAD SUMMARY	△	
E3.0	POWER FLOOR PLAN		
E3.1	ENLARGED POWER PLAN AND DETAILS	△	
E3.2	POWER ROOF PLAN		
E4.0	LIGHTING PLAN & SCHEDULE	△	
E5.0	COMMUNICATIONS PLAN		
E6.0	ELECTRICAL DETAILS		
E7.0	PHOTOMETRIC PLAN		

SCOPE OF WORK

SC-1 THRU SC-6 SCOPE OF WORK

SPECIFICATIONS

IN BOOK FORMAT

06-023756

Vincent+Murphy Incorporated
637 Fifth Avenue
San Rafael, Ca. 94901
(415) 451-2500
FAX 451-2595

LICENSED ARCHITECT
EDWARD MURPHY
No. C17828
REN. 10/31/07
STATE OF CALIFORNIA

JOB NUMBER
H0510

SUBMITTALS

03/24/06	BLDG PC#1 SUBMITTAL

REVISIONS

1	04/28/06	P.C. RESPONSE #1
2	05/26/06	P.C. RESPONSE #2

CONTRACT DATE:
BUILDING TYPE: KA60-Y04
PLAN VERSION: JAN 05 D
SITE NUMBER:
STORE NUMBER:

KFC / A&W
3144 S. BASCOM AVENUE
SAN JOSE, CA 95124-2022

KA60-Y04

TITLE SHEET
T1.0

PC # 06-00 95 19 sub. 6/28/06

W:\Data\Harman\2005\H0510_san jose_bascom\03_cd_current\001_KA_Y04-T1_0.dwg modified by Dhanrajan at Jun 26, 2006 - 4:13pm

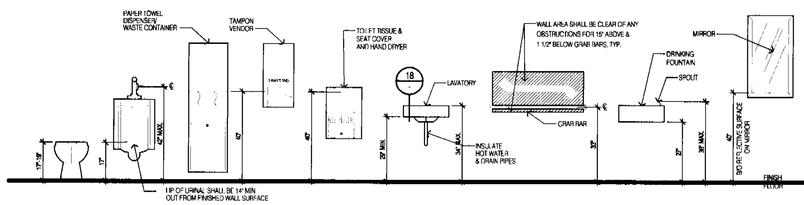

FIXTURE ACCESSORIES

N.T.S. 5

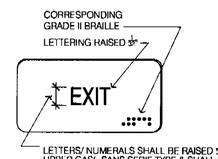

EXIT SIGNS

N.T.S. 1

DISABLED ACCESSIBILITY GENERAL NOTES

HAZARDS AND PROTRUDING OBJECTS

1. MINIMUM CLEAR FLOOR OR GROUND SPACE REQD TO ACCOMMODATE A SINGLE, STATIONARY WHEELCHAIR AND OCCUPANT S 30 INCHES X 48 INCHES. MINIMUM CLEAR FLOOR OR GROUND SPACE FOR WHEELCHAIRS MAY BE POSITIONED FOR FORWARD OR PARALLEL APPROACH TO AN OBJECT. FLOOR OR GROUND SPACE FOR WHEELCHAIRS MAY BE PART OF THE KNEE SPACE REQ'D UNDER SOME OBJECTS.
2. PROVIDE AN ADDITIONAL 12 INCHES WIDTH ON ONE SIDE FOR ALCOVES CREATER THAN 15 INCHES DEEP AND DESIGNED FOR SIDE APPROACH
3. PROVIDE AN ADDITIONAL 6 INCHES WIDTH ON ONE SIDE FOR ALCOVES CREATER THAN 24 INCHES DEEP AND DESIGNED FOR FRONT APPROACH
4. OBJECTS PROJECTING FROM WALLS WITH THEIR LEADING EDGES BETWEEN 27 INCHES AND 80 INCHES ABOVE THE FINISHED FLOOR SHALL PROTRUDE NO MORE THAN 4 INCHES INTO WALKS, HALLS, CORRIDORS, PASSAGEWAYS, OR AISLES.
5. OBJECTS MOUNTED WITH THEIR LEADING EDGES AT OR BELOW 27 INCHES ABOVE THE FINISHED FLOOR MAY PROTRUDE ANY AMOUNT
6. FREESTANDING OBJECTS MOUNTED ON POSTS / PYLONS MAY OVERHANG 12 INCHES MAXIMUM FROM 27 INCHES TO 80 INCHES ABOVE THE GROUND OR FINISHED FLOOR
7. PROTRUDING OBJECTS SHALL NOT REDUCE THE REQ'D CLEAR WIDTH OF AN ACCESSIBLE ROUTE OR MANEUVERING SPACE.
8. ANY OBSTRUCTION OVERHANGING A PEDESTRIAN WAY SHALL BE A MINIMUM OF 80 INCHES ABOVE THE WALKING SURFACE AS MEASURED TO THE BOTTOM OF THE OBSTRUCTION.

PARKING

1. SURFACE SLOPES OF PARKING SPACES FOR THE PHYSICALLY DISABLED SHALL NOT EXCEED 1/4 INCH PER FOOT (2% GRADIENT) IN ANY DIRECTION.
2. DISABLED PARKING SPACES SHALL BE LOCATED SO AS NOT TO REQUIRE LIFTS TO WHEELCHAIRS WALK BEHIND ANY OTHER NON-DISABLED OR DISABLED PARKING SPACE. (CALIFORNIA ONLY)
3. IN EACH PARKING AREA, A BUMPER OR CURB SHALL BE PROVIDED AND LOCATED TO PREVENT ENCROACHMENT OF CARS OVER THE REQ'D WIDTH OF WALKWAYS.
4. PARKING SPACES RESERVED FOR PERSONS WITH PHYSICAL DISABILITIES SHALL BE IDENTIFIED BY A REFLECTORIZED SIGN PERMANENTLY POSTED IMMEDIATELY ADJACENT TO AND VISIBLE FROM EACH STALL OR SPACE, CONSISTING OF A PROFILE VIEW OF A WHEELCHAIR WITH OCCUPANT, IN WHITE ON DARK BLUE BACKGROUND. THE SIGN SHALL NOT BE SMALLER THAN 70 INCHES IN AREA AND, WHEN IN THE PATH OF TRAVEL, SHALL BE POSTED AT A MINIMUM HEIGHT OF 80 INCHES FROM THE BOTTOM OF THE SIGN TO THE PARKING SPACE FINISHED GROUND. SIGNS MAY ALSO BE CENTERED ON THE WALL AT THE INTERIOR END OF THE PARKING SPACE AT A MINIMUM HEIGHT OF 36 INCHES FROM THE PARKING SPACE FINISHED GRADE, GROUND, OR SIDEWALK.

WALKS AND SIDEWALKS

1. WALKS AND SIDEWALKS SHALL HAVE A CONTINUOUS COMMON SURFACE NOT INTERRUPTED BY STEPS OR BY ABRUPT CHANGES IN LEVEL WHICH EXCEED 1/2 INCH, AND SHALL BE A MINIMUM OF 48 INCHES IN WIDTH.
2. SURFACE CROSS SLOPES SHALL NOT EXCEED 1/4 INCH PER FOOT.
3. WALKS, SIDEWALKS, AND PEDESTRIAN WAYS SHALL BE FREE OF GRATING. WHENEVER POSSIBLE, GRID OPENINGS WITHIN GRATINGS LOCATED IN THE SURFACE OF ANY OF THESE AREAS SHALL BE LIMITED TO 1/2 INCH IN THE DIRECTION OF THE TRAFFIC FLOW.
4. WHEN THE SLOPE IN THE DIRECTION OF TRAVEL OF ANY WALK EXCEEDS 1 VERTICAL TO 20 HORIZONTAL, IT SHALL COMPLY WITH THE PROVISIONS OF PEDESTRIANS RAMPS.
5. MAX. GRID OPENINGS FOR ANY GRATINGS (CATCH BASINS, ETC.) SHALL NOT EXCEED 1/2" IN DIRECTION OF PATH OF TRAVEL

ENTRANCES / DOORS

1. AT LEAST 50% OF PRIMARY ENTRANCES AND EXTERIOR GROUND FLOOR EXIT DOORS TO BUILDINGS AND FACILITIES SHALL BE MADE ACCESSIBLE TO THE PHYSICALLY DISABLED. (100% OF GROUND FLOOR ENTRANCES AND EXITS IN CALIFORNIA)
2. ALL ACCESS BLE ENTRANCES SHALL BE IDENTIFIED WITH AT LEAST ONE STANDARD SIGN AND WITH ADDITIONAL DIRECTIONAL SIGNS, AS REQUIRED, VISIBLE FROM APPROACHING PEDESTRIAN WAYS.
3. EVERY REQUIRED ENTRANCE OR PASSAGE DOORWAY SHALL BE OF A SIZE AS TO PERMIT THE INSTALLATION OF A DOOR NOT LESS THAN 36 INCHES IN WIDTH, AND NOT LESS THAN 80 INCHES IN HEIGHT. DOORS SHALL BE CAPABLE OF OPENING AT LEAST 90 DEGREES AND SHALL BE MOUNTED SO THAT THE CLEAR WIDTH OF THE DOORWAY IS NOT LESS THAN 32 INCHES.
4. LATCHING AND LOCKING DOORS THAT ARE HAND ACTIVATED SHALL BE A TYPE OF LEVER HARDWARE, PANIC BARS, PUSH PULL ACTIVATING BARS, OR OTHER HARDWARE DESIGNED TO PROVIDE PASSAGE WITHOUT REQUIRING THE ABILITY TO GRASP THE OPERATING HARDWARE.
5. LEVER HANDLE ACTIVATED DOOR OPENING HARDWARE SHALL BE CENTERED BETWEEN 30 INCHES AND 44 INCHES MAXIMUM ABOVE THE FLOOR.
6. THE FLOOR OR LANDING LENGTH ON EACH SIDE OF AN ENTRANCE OR A PASSAGE DOOR SHALL BE LEVEL AND CLEAR AT LEAST 60 INCHES IN THE DIRECTION OF THE DOOR SWING AND AT LEAST 48 INCHES OPPOSITE THE DIRECTION OF THE DOOR SWING AS MEASURED AT RIGHT ANGLES TO THE FACE OF THE DOOR IN THE CLOSED POSITION. THE WIDTH OF THE LEVEL AND CLEAR AREA ON THE SIDE WHICH THE DOOR SWINGS SHALL EXTEND A MINIMUM OF 24 INCHES BY ST THE STRIKE EDGE OF THE DOOR FOR DOORS WITH LATCH SIDE APPROACH AND 36 INCHES FOR DOORS REQUIRING LATCH SIDE APPROACH. REFER TO DETAIL NO. 2 ON THIS DRAWING FOR ADDITIONAL CLEARANCE REQUIREMENTS.
7. THE FLOOR OR LANDING SHALL NOT BE MORE THAN 1/2 INCH LOWER THAN THE THRESHOLD OF THE DOORWAY. CHANGES IN LEVEL BETWEEN 1/4 INCH AND 1/2 INCH SHALL BE LEVELED WITH A SLOPE NO GREATER THAN 1:2.
8. THE BOTTOM 10 INCHES OF ALL DOORS (EXCEPT AUTOMATIC AND SLIDING) SHALL HAVE A SMOOTH UNINTERRUPTED SURFACE TO ALLOW THE DOOR TO BE OPENED BY A WHEELCHAIR FOOTREST WITHOUT CREATING A TRAP OR HAZARDOUS CONDITION WHERE NARROW FRAME DOORS ARE USED. A 10 INCH HIGH SMOOTH PANEL SHALL BE INSTALLED ON THE PUSH SIDE OF THE DOOR WHICH WILL ALLOW THE DOOR TO BE OPENED BY A WHEELCHAIR FOOTREST.
9. THE MAXIMUM EFFORT TO OPERATE DOORS SHALL NOT EXCEED 5 LBS. FOR ALL EXTERIOR DOORS AND INTERIOR DOORS. SUCH PULL OR PUSH EFFORT BEING APPLIED AT RIGHT ANGLES TO HINGED DOORS AND AT THE CENTER PLANE OF SWING OR FOLDING DOORS. COMPENSATING DEVICES OR AUTOMATIC DOOR OPERATORS MAY BE UTILIZED TO MEET THE ABOVE STANDARDS. WHEN FIRE DOORS ARE REQD, THE MAXIMUM EFFORT TO OPERATE THE DOOR MAY NOT EXCEED 15 LBS.

STAIRWAYS

1. STAIRWAYS SHALL HAVE HANDRAILS ON EACH SIDE. EVERY STAIRWAY REQD TO BE MORE THAN 88 INCHES IN WIDTH SHALL BE PROVIDED WITH NOT LESS THAN ONE INTERMEDIATE HANDRAIL FOR EACH 88 INCHES OF REQD WIDTH. INTERMEDIATE HANDRAILS SHALL BE SPACED APPROXIMATELY EQUALLY WITHIN THE ENTIRE WIDTH OF THE STAIRWAY.
2. THE UPPER APPROACH AND THE LOWER TREAD OF EACH INTERIOR STAIR, AND ALL EXTERIOR STAIR TREADS, SHALL BE MARKED BY A STRIP OF CLEARLY CONTRASTING COLOR AT LEAST 2 INCHES WIDE AND PLACED PARALLEL TO, AND NOT MORE THAN, 1 INCH FROM THE NOSE OF THE STEP OR LANDING TO ALERT THE VISUALLY IMPAIRED. THE STRIPE SHALL BE OF A MATERIAL THAT IS AT LEAST AS SLIP RESISTANT AS THE TREADS OF THE STAIR.
3. WHERE STAIRS OCCUR OUTSIDE OF A BUILDING, THE UPPER APPROACH AND ALL TREADS SHALL BE MARKED BY A STRIP OF CLEARLY CONTRASTING COLOR AT LEAST 2 INCHES WIDE AND PLACED PARALLEL TO, AND NOT MORE THAN 1 INCH FROM THE NOSE OF THE STEP OR LANDING TO ALERT THE VISUALLY IMPAIRED. THE STRIP SHALL BE OF A MATERIAL THAT IS AT LEAST AS SLIP-RESISTANT AS THE TREADS OF THE STAIR. A PAINTED STRIPE SHALL BE ACCEPTABLE.
4. ALL STAIRTREAD SURFACES SHALL BE SLIP-RESISTANT.

STAIRWAYS (CONT.)

5. HANDRAILS AT STAIRWAYS SHALL BE 34 INCHES TO 38 INCHES ABOVE THE NOSING OF THE TREADS.
6. HANDRAILS AT THE TOP OF STAIRWAYS SHALL EXTEND A MINIMUM OF 12 INCHES OF LEVEL DISTANCE BEYOND THE TOP NOSING. HANDRAILS AT THE BOTTOM OF STAIRWAYS SHALL EXTEND A MINIMUM OF TREAD WIDTH PLUS 12 INCHES BEYOND THE BOTTOM NOSING BEFORE THEY ARE RETURNED. AT THE BOTTOM, THE HANDRAIL SHALL CONTINUE TO SLOPE FOR A DISTANCE OF THE WIDTH OF ONE TREAD FROM THE BOTTOM RISER. THE REMAINDER OF THE EXTENSION IS HORIZONTAL (LEVEL).
7. WHERE THE EXTENSION OF THE HANDRAIL IN THE DIRECTION OF THE STAIR RUN WOULD CREATE A HAZARD, THE EXTENSION SHALL BE MADE AT RIGHT ANGLES ON THE FACE OF A RETURNING WALL. WHERE THE STAIRS ARE CONTINUOUS THE HANDRAIL SHALL BE CONTINUOUS AND NEED NOT EXTEND OUT INTO THE LANDING.
8. HANDRAILS ARE REQD ON RAMPS WHEN THE SLOPE EXCEEDS 1:20 (5%). HANDRAILS AT RAMPS SHALL RUN ALONG BOTH SIDES OF A RAMP, BE CONTINUOUS THE FULL LENGTH, AND EXTENSIONS AT THE TOP AND BOTTOM OF THE RAMP SHALL COMPLY WITH THE NUMBER 2. ABOVE.
9. THE HANDRAIL GRIP SURFACE AT RAMPS SHALL BE MOUNTED BETWEEN 34 INCHES AND 38 INCHES ABOVE THE RAMP SURFACE.
10. ALL HANDRAILS ENDS SHALL BE RETURNED OR SHALL TERMINATE IN NEWEL POSTS OR SMOOTH TERMINALS.
11. ALL HANDRAILS PROJECTED FROM A WALL SHALL HAVE AN ABSOLUTE CLEARANCE OF 1-1/2 INCHES BETWEEN THE WALL AND THE HANDRAIL.
12. THE HANGGRIP PORTION OF HANDRAILS SHALL BE NOT LESS THAN 1-1/4 INCH NOR MORE THAN 1-1/2 INCH IN CROSS-SECTIONAL DIMENSION OR THE SHAPE SHALL PROVIDE AN EQUIVALENT SMOOTH GRIPPING SURFACE WITH NO SHARP CORNERS.

RAMPS (IF APPLICABLE)

1. ALL RAMPS USED AS EXITS AND ANY PATH OF TRAVEL HAVING A SLOPE GREATER THAN 1:20 SHALL COMPLY WITH THE REQUIREMENTS OF THIS SECTION. RAMPS SHALL HAVE THE LEAST POSSIBLE SLOPE.
2. PEDESTRIAN RAMPS SERVING PRIMARY ENTRANCES TO A BUILDING SHALL HAVE A MINIMUM WIDTH OF 48 INCHES. RAMPS SERVING AN OCCUPANCY LOAD GREATER THAN 300 SHALL HAVE A MINIMUM WIDTH OF 60 INCHES. (CALIFORNIA ONLY)
3. ALL RAMPS IN AREAS ACCESSIBLE TO PERSONS WITH DISABILITIES ON A PATH OF TRAVEL OR SERVING EXITS SHALL HAVE A 1:12 MAXIMUM SLOPE WITH CROSS SLOPES NO GREATER THAN 1:50.
4. THE LEVEL LANDING WIDTH OF ANY RAMP SHALL EXTEND PAST THE STRIKE EDGE OF ANY DOOR OR GATE AS SHOWN ON DETAIL NO. 2 ON THIS DWG. 5. DOORS STANDING IN ANY POSITION SHALL NOT REDUCE THE MINIMUM DIMENSION OF THE RAMP TO LESS THAN 42" INCHES OR THE REQ'D WIDTH BY MORE THAN 3 INCHES. (CALIFORNIA ONLY)
6. ALL CURB RAMPS SHALL BE PROVIDED WITH TRUNCATED DOMES TO COMPLY WITH THE MINIMUM REQUIREMENTS OF A.D.A.A.G. AND THE NEW CA-24 ACCESS REQUIREMENTS.

SANITARY FACILITIES (GENERAL)

1. ALL DOORWAYS LEADING TO SANITARY FACILITIES SHALL HAVE 32 INCH CLEAR, UNOBSTRUCTED OPENINGS.
2. ALL SINKS, FAUCET CONTROLS, AND OPERATING MECHANISMS SHALL BE OPERABLE WITH ONE HAND AND SHALL NOT REQUIRE TIGHT GRASPING, PINCHING, OR TWISTING OF THE WRIST. THE FORCE REQD TO ACTIVATE CONTROLS SHALL BE NO GREATER THAN 5 LBS. FOOT-OPERATED, PUSH TYPE, AND ELECTRONICALLY CONTROLLED MECHANISMS ARE EXAMPLES OF ACCEPTABLE DESIGNS. SELF-CLOSING VALVES ARE ALLOWED IF THE FAUCET REMAINS OPEN FOR AT LEAST 10 SECONDS.
3. LAVATORIES SHALL BE MOUNTED WITH A MINIMUM DISTANCE OF 15 INCHES (18 INCHES IN CALIFORNIA) FROM A WALL OR PARTITION TO THE CENTER OF THE FIXTURE. ACCESSIBLE LAVATORIES SHALL BE MOUNTED WITH THE RIM OR COUNTER SURFACE NO HIGHER THAN 34 INCHES ABOVE THE FLOOR.
4. DOORS TO ACCESSIBLE TOILET ROOMS SHALL NOT ENCROACH INTO THE CLEAR FLOOR SPACE REQD FOR ANY FIXTURE

IDENTIFICATION SYMBOLS (TOILET ROOM)

1. DOOR MOUNTED SIGNAGE
   A. (MEN'S): EQUILATERAL TRIANGLE 1/4" THICK WITH EDGES 12" LONG AND A VERTEX POINTING UPWARD.
   B. (WOMEN'S): 12" Ø CIRCLE 1/4" THICK.
   C. (UNISEX): 12" Ø CIRCLE 1/4" THICK WITH 1/4" THICK TRIANGLE SUPERIMPOSED WITHIN CIRCLE.
   D. THE COLOR AND CONTRAST OF THE SIGN DISTINCTLY CONTRASTS WITH THE DOOR COLOR.
   E. SIGNS ARE CENTERED ON THE DOOR 60" FROM THE FLOOR.
2. WALL MOUNTED SIGNAGE
   A. THE INTERNATIONAL SYMBOL OF ACCESSIBILITY IS INSTALLED ON THE WALL ADJACENT TO THE LATCH SIDE OF THE DOOR. THE BORDER DIMENSIONS OF THIS PICTOGRAM SHALL BE MINIMUM OF 6" IN HEIGHT. WHERE THERE IS NO WALL SPACE ON THE LATCH SIDE, INCLUDING AT DOUBLE LEAF DOORS, SIGNS SHALL BE PLACED ON THE NEAREST ADJACENT WALL, PREFERABLY ON THE RIGHT.
   B. VERBAL DESCRIPTION AS TO TOILET ROOM USAGE (I.E. MEN'S TOILET ROOM, ETC.) IS PLACED DIRECTLY BELOW THE SYMBOL OF ACCESSIBILITY.
   C. THE CHARACTERS AND BACKGROUND OF THE SIGN IS EGGSHELL MATTE, OR OTHER NON-GLARE FINISH AND THE COLOR AND CONTRAST OF THE SIGN DISTINCTLY CONTRASTS WITH THE COLOR AND CONTRAST OF THE WALL.
   D. SIGNS ARE CENTERED ON THE WALL 60" FROM THE FLOOR. LETTERS AND NUMERALS ARE RAISED 1/32". ARE SANS-SERIF UPPERCASE CHARACTERS AND ARE ACCOMPANIED BY GRADE 2 BRAILLE. CHARACTERS ARE MINIMUM 5/8" HIGH AND A MAXIMUM OF 2" HIGH.

TOILET ROOM FIXTURES AND ACCESSORIES

1. THE HEIGHT OF ACCESSIBLE WATER CLOSETS SHALL BE A MINIMUM OF 17 INCHES AND A MAXIMUM OF 19 INCHES MEASURED TO THE TOP OF THE TOILET SEAT.
2. PROVIDE 16 INCHES FROM THE CENTERLINE OF THE WATER CLOSET TO THE ADJACENT WALL.
3. TOILET AND URINAL FLUSH CONTROLS SHALL BE OPERABLE WITH ONE HAND AND SHALL NOT REQUIRE TIGHT GRASPING, PINCHING, OR TWISTING OF THE WRIST. CONTROLS FOR THE FLUSH VALVES SHALL BE MOUNTED ON THE OPEN (WIDE) SIDE OF THE TOILET STALL, NO MORE THAN 44 INCHES ABOVE THE FLOOR. THE FORCE REQD TO ACTIVATE CONTROLS SHALL BE NO GREATER THAN 5 LBS.
4. WHERE URINALS ARE PROVIDED, AT LEAST ONE SHALL HAVE A CLEAR SPACE 30 INCHES WIDE BY 48 INCHES LONG IN FRONT OF THE URINAL. AT LEAST ONE URINAL WITH A RIM PROJECTING A MINIMUM OF 14 INCHES FROM THE WALL (CALIFORNIA ONLY) AND A MAXIMUM OF 17 INCHES ABOVE THE FLOOR SHALL BE INSTALLED.
5. A CLEAR FLOOR SPACE 30 INCHES WIDE BY 48 INCHES LONG SHALL BE PROVIDED IN FRONT OF A LAVATORY TO ALLOW FORWARD APPROACH. SUCH CLEAR SPACE SHALL EXTEND OR OVERLAP AN ACCESSIBLE ROUTE AND SHALL EXTEND INTO KNEE AND TOE SPACE UNDERNEATH LAVATORY.
6. LAVATORIES SHALL BE MOUNTED WITH A CLEARANCE OF AT LEAST 29 INCHES FROM THE FLOOR TO THE BOTTOM OF THE APRON WITH KNEE CLEARANCE UNDER THE FRONT LIP EXTENDING A MINIMUM OF 30 INCHES IN WIDTH WITH 8 INCHES MINIMUM DEPTH AT THE TOP. TOE CLEARANCE SHALL BE SAME WIDTH AND A MINIMUM OF 9 INCHES HIGH FROM THE FLOOR AND A MINIMUM OF 17 INCHES DEEP FROM THE FRONT OF THE LAVATORY.
7. HOT WATER AND DRAIN PIPES UNDER LAVATORIES SHALL BE INSULATED OR OTHERWISE COVERED. THERE SHALL BE NO SHARP OR ABRASIVE SURFACES UNDER LAVATORIES.

IDENTIFICATION SYMBOLS (CONT.)

8. MIRRORS SHALL BE MOUNTED WITH BOTTOM EDGE OF THE REFLECTIVE SURFACE NOT MORE THAN 40 INCHES FROM THE FLOOR. LOCATE PAPER TOWEL DISPENSERS, SANITARY NAPKIN DISPENSERS, AND
9. AND WASTE RECEPTACLES WITH ALL OPERABLE PARTS NOT MORE THAN 40 INCHES FROM THE FLOOR.
10. LOCATE TOILET TISSUE DISPENSERS ON THE WALL WITHIN 12 INCHES OF THE FRONT EDGE OF THE TOILET SEAT.
11. A CLEAR SPACE, MEASURED FROM THE FLOOR TO A HEIGHT OF 27 INCHES ABOVE THE FLOOR, WITHIN THE SANITARY FACILITY ROOM, OF SUFFICIENT SIZE TO INSCRIBE A CIRCLE OF A DIAMETER NOT LESS THAN 60 INCHES, OR A CLEAR SPACE NOT LESS THAN 56 INCHES X 63 INCHES IN SIZE SHALL BE PROVIDED. DOORS OTHER THAN THE DOOR TO THE DISABLED TOILET COMPARTMENT, IN ANY POSITION, MAY NOT ENCROACH INTO THIS SPACE BY NOT MORE THAN 12 INCHES.
12. AN ACCESSIBLE INDIVIDUAL TOILET STALL SHALL PROVIDE AT LEAST 28 INCHES CLEAR SPACE FROM A FIXTURE OR 32 INCHES CLEAR SPACE FROM A WALL AT ONE SIDE OF THE WATER CLOSET. A 48 INCH LONG CLEAR SPACE IN FRONT OF WATER CLOSET SHALL BE PROVIDED IF THE COMPARTMENT HAS AN END OPENING DOOR (FACING THE WATER CLOSET). A 60 INCH LONG CLEAR SPACE SHALL BE PROVIDED IN COMPARTMENT WHEN DOOR IS LOCATED AT THE SIDE. GRAB BARS SHALL NOT PROJECT MORE THAN 3 INCHES INTO CLEAR SPACE SPECIFIED ABOVE.
13. WATER CLOSET COMPARTMENT SHALL BE EQUIPPED WITH DOOR THAT HAS AN AUTOMATIC CLOSING DEVICE, AND A CLEAR UNOBSTRUCTED OPENING WIDTH OF 32 INCHES WHEN LOCATED AT THE END, AND 34 INCHES (CALIF. ONLY) WHEN LOCATED AT THE SIDE, WHEN THE DOOR IS POSITIONED AT AN ANGLE OF 90 DEGREES FROM ITS CLOSED POSITION. DOOR SHALL HAVE A 9" MINIMUM CLEAR OPENING FROM FINISH FLOOR TO BOTTOM OF DOOR.
14. EXCEPT FOR DOOR OPENINGS, A CLEAR UNOBSTRUCTED ACCESS NOT LESS THAN 44 INCHES SHALL BE PROVIDED TO ALL WATER CLOSET COMPARTMENTS DESIGNED FOR USE BY THE DISABLED. THE SPACE IMMEDIATELY IN FRONT OF A WATER CLOSET COMPARTMENT SHALL BE NOT LESS THAN 48 INCHES AS MEASURED AT RIGHT ANGLES TO THE COMPARTMENT DOOR IN ITS CLOSED POSITION.

GRAB BARS

1. GRAB BARS SHALL BE LOCATED ON ONE SIDE AND THE BACK OF THE PHYSICALLY DISABLED TOILET STALL OR COMPARTMENT AND SHALL BE SECURELY ATTACHED 33 INCHES ABOVE AND PARALLEL TO THE FLOOR.
2. GRAB BARS AT THE SIDE SHALL BE AT LEAST 42 INCHES LONG WITH THE FRONT END POSITIONED 54 INCHES FROM THE BACK OF THE STALL. GRAB BARS AT THE BACK SHALL NOT BE LESS THAN 36 INCHES LONG.
3. THE DIAMETER OR WIDTH OF THE GRIPPING SURFACES OF A GRAB BAR SHALL BE 1-1/4 INCHES OR THE SHAPE SHALL PROVIDE AN EQUIVALENT GRIPPING SURFACE. IF THE GRAB BARS ARE MOUNTED ADJACENT TO A WALL, THE SPACE BETWEEN THE WALL AND THE GRAB BARS SHALL BE 1-1/2 INCHES.
4. GRAB BARS, AND ANY WALL OR OTHER SURFACE ADJACENT TO IT, SHALL BE FREE OF ANY SHARP OR ABRASIVE ELEMENTS. GRAB BAR EDGES SHALL HAVE A MINIMUM RADIUS OF 1/8 INCH.
5. GRAB BARS SHALL NOT ROTATE WITHIN THEIR FITTINGS.
6. GRAB BARS SHALL BE DESIGNED TO SUPPORT A 250 POUND FORCE.

TELEPHONES

1. PROVIDE A 30 INCH X 48 INCH CLEAR SPACE AT TELEPHONE. THE CLEAR SPACE MAY INCLUDE KNEE SPACE UNDER THE TELEPHONE.
2. THE HIGHEST OPERABLE PART OF THE TELEPHONE SHALL BE WITHIN 48 INCHES OF THE FLOOR IF FORWARD APPROACHED AND 54 INCHES IF SIDE APPROACHED.
3. TELEPHONES MOUNTED IN A CORNER THAT REQUIRE WHEELCHAIR USERS TO REACH DIAGONALLY SHALL HAVE THE HIGHEST OPERABLE PART NO HIGHER THAN 54 INCHES ABOVE THE FLOOR.
4. THE CORD FROM THE TELEPHONE TO THE HANDSET SHALL BE AT LEAST 29 INCHES LONG.
5. IF BANKS OF PUBLIC TELEPHONES ARE PROVIDED, THEN A REASONABLE NUMBER, BUT ALWAYS AT LEAST ONE IN A BUILDING OR FACILITY SHALL BE EQUIPPED WITH A VOLUME CONTROL.
6. TELEPHONES SHALL HAVE PUSH-BUTTON CONTROLS WHERE SERVICE FOR SUCH EQUIPMENT IS AVAILABLE.

ADDITIONAL REQUIREMENTS

1. THE CENTER OF RECEPTACLE OUTLETS SHALL BE NOT LESS THAN 15 INCHES ABOVE THE FLOOR OR WORKING PLATFORM.
2. THE CENTER OF THE GRIP OF THE OPERATING HANDLE OF SWITCHES INTENDED TO BE USED BY OCCUPANTS OF A ROOM OR AREA, ON CONTROL LIGHTING AND RECEPTACLE OUTLETS, APPLIANCES, OR COOLING, HEATING, AND VENTILATING EQUIPMENT, SHALL BE NOT LESS THAN 36 INCHES NOR MORE THAN 48 INCHES ABOVE THE FLOOR OR WORKING PLATFORM.
3. THE CONTROLS OF FIRE ALARM INITIATING DEVICES (BOXES) SHALL BE LOCATED 48 INCHES ABOVE THE LEVEL OF THE ADJACENT FLOOR. WORKING PLATFORM, GROUND SURFACE, OR SIDEWALK. INTERNATIONAL SYMBOL OF ACCESSIBILITY SHALL BE THE STANDARD USED TO IDENTIFY FACILITIES THAT ARE ACCESSIBLE TO AND USABLE BY PHYSICALLY DISABLED PERSONS. THE SYMBOL SPECIFIED ABOVE SHALL CONSIST OF A WHITE FIGURE ON BLUE BACKGROUND. THE BLUE SHALL BE EQUAL TO COLOR NO. 15090 IN FEDERAL STANDARD 595A.

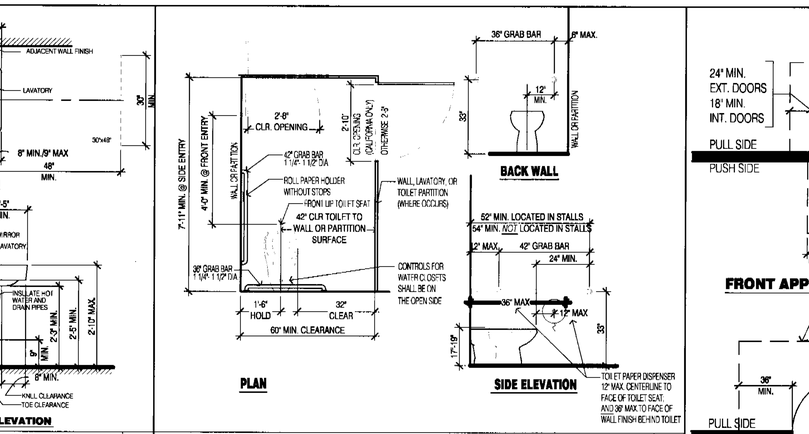

LAVATORY CLEARANCE

N.T.S. 18

TOILET STALL CLEARANCE

N.T.S. 10

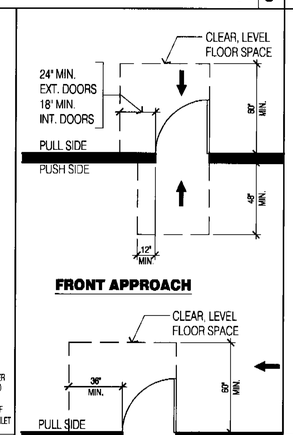

EXIT SIGN PLACEMENT

N.T.S. 2

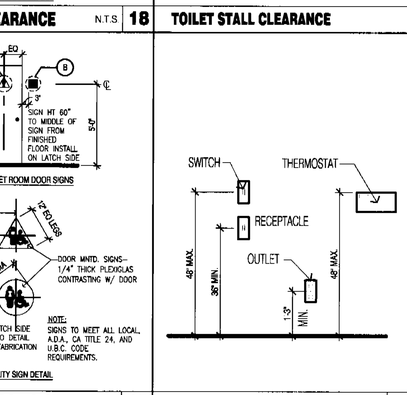

ACCESSIBLE DOOR SIGN

N.T.S. 19

RECEPTICLES / SWITCHES

N.T.S. 15

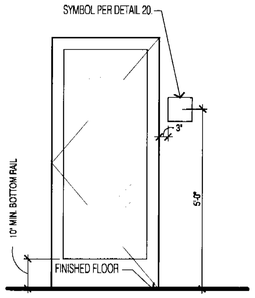

REFER TO DETAIL 2 FOR "EXIT" DOOR ACCESSIBILITY IDENTIFICATION REQ'TS. @ DOOR INTERIORS

ENTRANCE IDENTIFICATION

N.T.S. 11

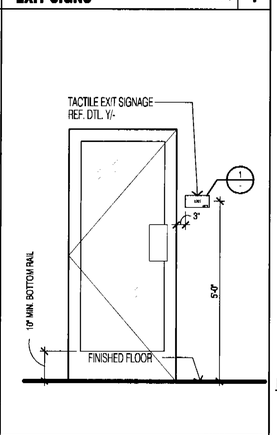

XXX

N.T.S. 3

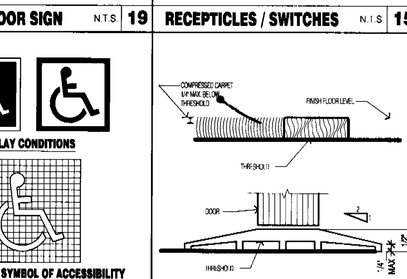

ACCESSIBILITY SIGN

N.T.S. 20

THRESHOLDS / TRANSITIONS

N.T.S. 16

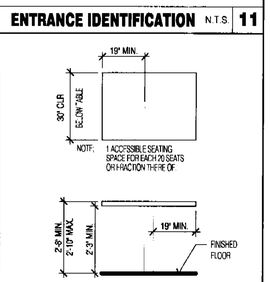

ACCESSIBILITY SEATING

N.T.S. 12

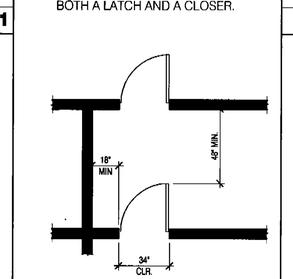

DOOR CLEARANCES

N.T.S. 8

XXX

N.T.S. 4

Vincent+Murphy Incorporated
637 Fifth Avenue
San Rafael, Ca. 94901
(415) 451-2500
FAX 451-2595

LICENSED ARCHITECT HUGH EDWARD MURPHY No. C17928 EXP. 10/31/07

PERFORMANCE CERTIFICATE OF COMPLIANCE Part 1 of 3 PERF-1

PROJECT NAME: KFC / A & W
DATE: 6/21/2006
PROJECT ADDRESS: 3144 S. Bascom Avenue San Jose
PRINCIPAL DESIGNER - ENVELOPE: Vincent & Murphy, Inc. TELEPHONE: 415-451-2500
DOCUMENTATION AUTHOR: ENERGY CALC CO. TELEPHONE: (415) 457-0990
Building Permit #
Checked by/Title
Enforcement Agency Use

GENERAL INFORMATION

DATE OF PLANS	BUILDING CONDITIONED FLOOR AREA	CLIMATE ZONE
	2,736 Sq.Ft.	4

BUILDING TYPE: X NONRESIDENTIAL | HIGH RISE RESIDENTIAL | HOTEL/MOTEL GUEST ROOM
PHASE OF CONSTRUCTION: X NEW CONSTRUCTION | ADDITION | EXISTING + ADDITIONAL ALTERATION

STATEMENT OF COMPLIANCE

This Certificate of Compliance lists the building features and performance specifications needed to comply with Title 24, Parts 1 and 6 of the California Code of Regulations. This certificate applies only to a Building using the performance compliance approach.

The documentation preparer hereby certifies that the documentation is accurate and complete.

DOCUMENTATION AUTHOR: Tisha Stogsdill SIGNATURE: DATE:

The Principal Designer hereby certifys that the proposed building design represented in this set of construction documents is consistent with the other compliance forms and worksheets, with the specifications, and with any other calculations submitted with this permit application. The proposed building as designed meets the energy efficiency requirements contained in sections 110, 116, through 118, and 140 142, 143 or 149 of Title 24, Part 6.

ENV. LTG. MECH.
X X X 1. I hereby affirm that I am eligible under the provisions of Division 3 of the Business and Professions Code to sign this document as the person responsible for its preparation; and that I am licensed in the State of California as a civil engineer, mechanical engineer, or I am a licensed architect.
2. I affirm that I am eligible under the provisions of Division 3 of the Business and Professions Code Section 5537.2 or 6737.3 to sign this document as the person responsible for its preparation; and that I am a licensed contractor performing this work.
3. I affirm that I am eligible under Division 3 of the Business and Professions Code to sign this document because it pertains to a structure or type of work described as exempt pursuant to Business and Professions Code Sections 5537, 5538, and 6737.1. (These sections of the Business and Professions Code are printed in full in the Nonresidential Manual.)

ENVELOPE COMPLIANCE

Indicate location on plans of Note Block for Mandatory Measures: T1.3
Required Forms: ENV-1
PRINCIPAL ENVELOPE DESIGNER - NAME: Vincent & Murphy, Inc. SIGNATURE: LIC. NO.: C17928 DATE: 6/21/06

LIGHTING COMPLIANCE

Indicate location on plans of Note Block for Mandatory Measures: T1.3
Required Forms: LTG-1, LTG-2
PRINCIPAL LIGHTING DESIGNER - NAME: Vincent & Murphy, Inc. SIGNATURE: LIC. NO.: C17928 DATE: 6/21/06

MECHANICAL COMPLIANCE

Indicate location on plans of Note Block for Mandatory Measures
Required Forms: MECH-1, MECH-2, MECH-3, MECH-5
PRINCIPAL MECHANICAL DESIGNER - NAME: Vincent & Murphy, Inc. SIGNATURE: LIC. NO.: C17928 DATE: 6/21/06

Run Initiation Time: 06/21/06 11:46:25 Run Code: 1150915525
EnergyPro 4.1 by EnergySoft User Number: 1005 Job Number: 0323KFC Page 3 of 27

PERFORMANCE CERTIFICATE OF COMPLIANCE Part 2 of 3 PERF-1

PROJECT NAME: KFC / A & W
DATE: 6/21/2006

ANNUAL TDV ENERGY USE SUMMARY (kBtu/sqft-yr)

ENERGY COMPONENT	Standard Design	Proposed Design	Compliance Margin
Space Heating	1.34	1.18	0.16
Space Cooling	199.04	180.84	18.21
Indoor Fans	102.21	128.06	26.75
Heat Rejection	0.00	0.00	0.00
Pumps & Misc.	0.00	0.00	0.00
Domestic Hot Water	41.05	32.94	8.11
Lighting	10.78	9.95	0.84
Receptacle	50.43	50.43	0.00
Process	666.43	666.43	0.00
TOTALS:	1,165.48	1,154.73	0.67

Percent better than Standard: 0.1% (0.1% excluding process)

BUILDING COMPLIES

GENERAL INFORMATION

Building Orientation	(SW) 215 deg	Conditioned Floor Area	2,736 sqft
Number of Stories	1	Unconditioned Floor Area	0 sqft
Number of Systems	2	Conditioned Footprint Area	2,736 sqft
Number of Zones	4	Fuel Type	Natural Gas

	Orientation	Gross Area	Glazing Area	Glazing Ratio
Front Elevation	(SW)	500 sqft	165 sqft	33.0%
Left Elevation	(NW)	935 sqft	81 sqft	8.7%
Rear Elevation	(NE)	500 sqft	0 sqft	0.0%
Right Elevation	(SE)	935 sqft	198 sqft	21.2%
Total		2,870 sqft	444 sqft	15.5%
Roof		2,736 sqft	0 sqft	0.0%

	Standard	Proposed
Lighting Power Density	1.589 W/sqft	1.573 W/sqft
Prescriptive Env. Heat Loss	749 Btu/h	597 Btu/h
Prescriptive Env. Heat Gain	65,553 Btu/h	56,558 Btu/h

Remarks:
Standard Building (Compliance)

Run Initiation Time: 06/21/06 11:46:26 Run Code: 1150915526
EnergyPro 4.1 by EnergySoft User Number: 1005 Job Number: 0323KFC Page 4 of 27

PERFORMANCE CERTIFICATE OF COMPLIANCE Part 3 of 3 PERF-1

PROJECT NAME: KFC / A & W
DATE: 6/21/2006

ZONE INFORMATION

System Name	Zone Name	Occupancy Type	Floor Area (sqft.)	Inst. LPD (W/sf)	Ctrl. Credit (W/sf)	Allowed LPD Area (W/sf)	Allowed LPD Tailored (W/sf)*	Proc. Loads (W/sf)
Customer Mechanical System	Customer Area	Dining	1,144	1.695			1.969	
	Restrooms	Corridor/Restroom/Support	309	0.905				
Kitchen Mechanical System	Service Area	Kitchen, Food Preparation	1,211	1.395				28.000
	Office	Office	72	1.292				

Notes: 1. See LTG-3-C (items marked with asterisk; see LTG-3-C for others) 2. See LTG-4-C 3. See LTG-5-C (by others) 4. See LTG-6-C Items with * require special documentation

EXCEPTIONAL CONDITIONS COMPLIANCE CHECKLIST

The local enforcement agency should pay special attention to the items specified in this checklist. These items require special written justification and documentation, and special verification to be used with the performance approach. The local enforcement agency determines the adequacy of the justification, and may reject a building or design that otherwise complies based on the adequacy of the special justification and documentation submitted.

The HVAC System "Bradford White EF50T150PEN" is a Large Gas water heater with Pilot Loss = 0 Btuh

The HVAC System "Trane YCD181C3LN" includes Demand Control Ventilation per Standards Section 121

The exceptional features listed in this performance approach application have specifically been reviewed. Adequate written justification and documentation for their use have been provided by the applicant.

Authorized Signature or Stamp

Run Initiation Time: 06/21/06 11:46:26 Run Code: 1150915527
EnergyPro 4.1 by EnergySoft User Number: 1005 Job Number: 0323KFC Page 5 of 27

CERTIFICATE OF COMPLIANCE ENV-1-C

PROJECT NAME: KFC / A & W
DATE: 6/21/2006

OPAQUE SURFACES

#	Surface Type	Area	U-Fac.	Insulation Cav.	Insulation Cont.	Act. Azm.	Tilt	Cond. Status	Joint Appendix IV Reference	Location / Comments
1	Roof	1,453	0.032	R-30	R-0.0	215	0	New	01-A17	Customer Area
2	Wall	335	0.074	R-19	R-0.0	215	90	New	09-A5	Customer Area
3	Wall	244	0.074	R-19	R-0.0	305	90	New	09-A5	Customer Area
4	Wall	502	0.074	R-19	R-0.0	125	90	New	09-A5	Customer Area
5	Roof	1,283	0.032	R-30	R-0.0	215	0	New	01-A17	Service Area
6	Wall	610	0.074	R-19	R-0.0	305	90	New	09-A5	Service Area
7	Wall	500	0.074	R-19	R-0.0	35	90	New	09-A5	Service Area
8	Wall	210	0.074	R-19	R-0.0	125	90	New	09-A5	Service Area
9	Door	24	0.700	None	R-0.0	125	90	New	28-A2	Service Area

N, L, R, S New Existing Altered Removed

FENESTRATION SURFACES

More than or equal to 10,000 sq.ft. of new built fenestration area must include a label certificate either issued by NFRC or provide a CEC Default Label Certificate using the default U-factors from Standards Table 116-A and B. Certificate shall be filed in the documentation compact office during construction and in the building manager's office after construction.

#	Type	Area	U-Fac.[1]	SHGC[2]	Azm.	Act. Stat.	Cond.	Glazing Type	Location/ Comments
1	Window Front (SW)	144	0.660	116-A	0.40 NFRC	215	New	Double Metal Fixed Low-E II	Customer Area
2	Window Front (SW)	21	1.280	116-A	0.80 116-B	215	New	Single Metal Clear	Customer Area
3	Window Left (NW)	81	0.660	116-A	0.40 NFRC	305	New	Double Metal Fixed Low-E II	Customer Area
4	Window Right (SE)	156	0.660	116-A	0.40 NFRC	125	New	Double Metal Fixed Low-E II	Customer Area
5	Window Right (SE)	42	1.280	116-A	0.80 116-B	125	New	Single Metal Clear	Customer Area

[1] U-factor Type: 116-A Default Table from Standards Table 116-1 Default Table from the ACM Manual Approach, NFRC Labeled value
[2] SHGC Type: 116-B Default Table from Standards, CDD Center of Glass, NFRC Labeled Value

EXTERIOR SHADING

#	Exterior Shade Type	SHGC	Window Hgt. Wd.	Overhang Len. Hgt.	Overhang LExt. RExt.	Left Fin Dist. Len. Hgt.	Right Fin Dist. Len. Hgt.
1	None	0.78					
2	None	0.78					
3	None	0.78					
4	None	0.78					
5	None	0.78					

MINIMUM SKYLIGHT AREA FOR LARGE ENCLOSED SPACES

The proposed building contains an enclosed space with floor area greater than 25,000 sq.ft., a ceiling height greater than 15 feet and a LPD for general lighting of at least 0.5 W/sq.ft. If this box is checked, ENV-6 C must be filled out when submitting under the Prescriptive Compliance Approach.

Run Initiation Time: 06/21/06 11:46:26 Run Code: 1150915526
EnergyPro 4.1 by EnergySoft User Number: 1005 Job Number: 0323KFC Page 6 of 27

CERTIFICATE OF COMPLIANCE (Part 1 of 3) LTG-1-C

PROJECT NAME: KFC / A & W
DATE: 6/21/2006

INSTALLED INDOOR LIGHTING POWER FOR CONDITIONED AND UNCONDITIONED SPACES

	INSTALLED WATTS
INSTALLED LIGHTING, CONDITIONED SPACES (From LTG-2-C)	4,304
PORTABLE LIGHTING (From LTG-3-C)	0
LIGHTING CONTROL CREDIT, CONDITIONED SPACES (From LTG-4-C)	0
CONDITIONED SPACE ADJUSTED INSTALLED LIGHTING POWER	4,304
INSTALLED LIGHTING, UNCONDITIONED SPACES (From LTG-2-C)	0
LIGHTING CONTROL CREDIT, UNCONDITIONED SPACES (From LTG-4-C)	0
UNCONDITIONED SPACE ADJUSTED INSTALLED LIGHTING POWER	0

ALLOWED INDOOR LIGHTING POWER FOR CONDITIONED SPACES

	ALLOWED WATTS
COMPLETE BUILDING METHOD (From LTG-5-C)	
AREA CATEGORY METHOD (From LTG-5-C)	
TAILORED METHOD (From LTG-5-C) ALLOWED LIGHTING POWER	4,304

ALTERNATE COMPLIANCE

X PERFORMANCE METHOD
COMMMON LIGHTING SYSTEM (From LTG-5-C)

ALLOWED INDOOR LIGHTING POWER FOR UNCONDITIONED SPACES (From LTG-5-C) 0

MANDATORY INDOOR AND DAYLIGHTING AUTOMATIC CONTROLS

CONTROL LOCATION (Room #)	CONTROL IDENTIFICATION	CONTROL TYPE (Auto Time Switch, Dimming, etc.)	SPACE CONTROLLED	Check if Daylighting	NOTE TO FIELD

NOTES TO FIELD - For Building Department Use Only

Run Initiation Time: 06/21/06 11:46:26 Run Code: 1150915528
EnergyPro 4.1 by EnergySoft User Number: 1005 Job Number: 0323KFC Page 7 of 27

CERTIFICATE OF COMPLIANCE (Part 3 of 3) LTG-1-C

PROJECT NAME: KFC / A & W
DATE: 6/21/2006

Designer:
This form is to be used by the designer and attached to the plans. Listed below are all the acceptance tests for lighting systems. The designer is required to check the boxes by all acceptance tests that apply and list all equipment that require an acceptance test. If all equipment of a certain type requires a test, list the equipment description and the number of systems to be tested in parentheses. The NJ number designates the Section in the Appendix of the Nonresidential ACM Manual that describes the test. Also indicate the person responsible for performing the tests (i.e. the installing contractor, design professional or an agent selected by the owner). Since this form will be part of the plans, completion of this section will allow the responsible party to budget for the scope of work appropriately.

Building Departments:
Before an occupancy permit is granted for a newly constructed building or space, or a new lighting system system serving a building or space is operated for normal use, all control devices serving the building or space shall be certified as meeting the Acceptance Requirements for Code Compliance. In addition a Certificate of Acceptance, LTG-1-A, Forms shall be submitted to the building department that:

A. Certifies plans, specifications, installation certificates, and operating and maintenance information meet the requirements of 10-103(b) and Title 24 Part 6.

Test Description	Test Performed By:
LTG-2-A: Lighting Control Acceptance Document - Occupancy Sensor Acceptance - Manual Daylight Controls Acceptance - Automatic Time Switch Control Acceptance Equipment requiring acceptance testing	
☐ LTG-3-A: Automatic Daylighting Controls Acceptance Document Equipment requiring acceptance testing	

Run Initiation Time: 06/21/06 11:46:26 Run Code: 1150915528
EnergyPro 4.1 by EnergySoft User Number: 1005 Job Number: 0323KFC Page 8 of 27

CERTIFICATE OF COMPLIANCE MECH-1-C

PROJECT NAME: KFC / A & W
DATE: 6/21/2006

Designer:
This form is to be used by the designer and attached to the plans. Listed below are all the acceptance tests for mechanical systems. The designer is required to check the boxes by all acceptance tests that apply and list all equipment that requires an acceptance test. If all equipment of a certain type requires a test, list the equipment description and the number of systems to be tested in parentheses. The NJ number designates the Section in the Appendix of the Nonresidential ACM Manual that describes the test. Also indicate the person responsible for performing the tests (i.e. the installing contractor, design professional or an agent selected by the owner). Since this form will be part of the plans, completion of this section will allow the responsible party to budget for the scope of work appropriately.

Building Departments:
SYSTEM ACCEPTANCE: Before an occupancy permit is granted for a newly constructed building or space, or a new space conditioning system serving a building or space is operated for normal use, all control devices serving the building or space shall be certified as meeting the Acceptance Requirements for Code Compliance.
In addition a Certificate of Acceptance, MECH-1-A Forms shall be submitted to the building department that certifies plans, specifications, installation certificates, and operating and maintenance information meet the requirements of Section 10-103(b) and Title 24 Part 6.

STATEMENT OF COMPLIANCE

MECH-2-A Ventilation System Acceptance Document
Variable Air Volume Systems Outdoor Air Acceptance
Constant Air Volume Systems Outdoor Air Acceptance
Equipment requiring acceptance testing
Test required on all New systems both New Construction and Retrofit
MECH-3-A Packaged HVAC Systems Acceptance Document
Equipment requiring acceptance testing
Test required on all New systems both New Construction and Retrofit
MECH-4-A Air Side Economizer Acceptance Document
Equipment requiring acceptance testing
Test required on all New systems both New Construction and Retrofit. Units with economizers that are installed at the factory and certified with the commission do not require equipment testing but do require operational inspection
MECH-5-A Air Distribution Acceptance Document
Equipment requiring acceptance testing
This test required if the unit serves 5,000 ft2 of space or less and 20% or more of the ducts are in unconditioned or semi-conditioned space (as per attic). New systems that meet the above requirements. Retrofit systems that meet the above requirements and either extend ducts, relocate ducts or replace the packaged unit
MECH-6-A Demand Control Ventilation Acceptance Document
Equipment requiring acceptance testing
All new DCV controls installed on new or existing packaged systems must be tested
MECH-7-A Supply Fan Variable Flow Control Acceptance Document
Equipment requiring acceptance testing
All new VAV fan volume controls installed on new or existing systems must be tested
MECH-8-A Hydronic System Control Acceptance Document
Variable Flow Controls Applies to chilled and hot water systems
Automatic Isolation Controls Applies to new boilers and chillers and the primary pumps are dominated by a common header.
Supply Water Temperature Reset Controls
Applies to new hot/cold flow chilled and hot water systems that have a design capacity greater than or equal to 500,000 Btu/hr
Water loop Heat Pump Controls
Applies to all new water loop heat pump systems where the combined loop pumps are greater than 5 hp
Variable Frequency Controls Applies to all new distribution pumps on new variable flow chilled, hydronic heat pump or condenser water systems where the pump motors are greater than 5 hp
Equipment requiring acceptance testing

EnergyPro 4.1 by EnergySoft User Number: 1005 Job Number: 0323KFC Page 9 of 27

CITY OF SAN JOSE BUILDING DIVISION
APPROVED
DATE

Vincent+Murphy Incorporated
637 Fifth Avenue
San Rafael, Ca. 94901
(415) 451-2500
FAX 451-2595

LICENSED ARCHITECT HUGH HOWARD MURPHY No. C17928 RCNI 10/31/07 STATE OF CALIFORNIA

JOB NUMBER
H0510

SUBMITTALS
03/24/06 BLDG.PC#1 SUBMITTAL

REVISIONS
1 04/28/06 P.C. RESPONSE #1
2
3
4
5
6
7
8
9
10

CONTRACT DATE:
BUILDING TYPE: KA60-Y04
PLAN VERSION: JAN 05 D
SITE NUMBER:
STORE NUMBER:

KFC / A&W
3144 S. BASCOM AVENUE
SAN JOSE, CA. 95124-2022

KA60-Y04

ENERGY CALCULATIONS

T1.2

W:\Data\bcrman\2005\H0510_san jose_bascom\03_cd_current\003_KA_Y04_T1-2.dwg modified by bhanrigan at: Jun 26, 2006 - 3:24pm

ENVELOPE MANDATORY MEASURES — ENV-MM

PROJECT NAME: KFC / A & W
DATE: 6/21/2006

		DESCRIPTION	Designer	Enforcement
X	116(a)	Installed Insulating Material shall have been certified by the manufacturer to comply with the California Quality Standards for Insulating material, Title 20, Chapter 4, Article 3.		
X	116(c)	All Insulating Materials shall be installed in compliance with the flame spread rating and smoke density requirements of Sections 2602 and 707 of Title 24, Part 2.		
X	117(a)	All Exterior Joints and openings in the building that are observable sources of air leakage shall be caulked, gasketed, weatherstripped or otherwise sealed.		
X	116(b)	Site Constructed Doors, Windows and Skylights shall be caulked between the unit and the building, and shall be weatherstripped (except for unframed glass doors and fire doors).		
X	116(a)1	Manufactured Doors and Windows installed shall have air infiltration rates not exceeding those shown in Table Number 1-E of the Standards. Manufactured fenestration products must be labeled for U-value according to NFRC procedures.		
X	118(n)	Demising Walls in Nonresidential Buildings: The opaque portions of framed demising walls in nonresidential buildings shall have insulation with an installed R-value of no less than R-13 between framing members.		

LIGHTING MANDATORY MEASURES — LTG-MM

PROJECT NAME: KFC / A & W
DATE: 6/21/2006

		DESCRIPTION	Designer	Enforcement
X	131(d)1	For every floor, all interior lighting systems shall be equipped with a separate automatic control to shut off the lighting. This automatic control shall meet the requirements of Section 119 and may be an occupancy sensor, automatic time switch, or other device capable of automatically shutting off the lighting.		
X	131(d)2	Override for Building Lighting Shut-off: The automatic building shut-off system is provided with a manual, accessible override switch in sight of the lights. The area of override is not to exceed 5,000 square feet.		
X	119(h)	Automatic Control Devices Certified: All automatic control devices specified are certified, all alternate equipment shall be certified and installed as directed by the manufacturer.		
X	111	Fluorescent Ballast and Luminaires Certified: All fluorescent fixtures specified for the project are certified and listed in the Directory. All installed fixtures shall be certified.		
X	132	Tandem Wiring for One and Three Lamp Fluorescent Fixtures: All one and three lamp fluorescent fixtures are tandem wired with two lamp ballasts where required by Standards Section 132; or all one and three lamp fluorescent fixtures are specified with electronic high-frequency ballasts and are exempt from tandem wiring requirements.		
X	131(a)	Individual Room/Area Controls: Each room and area in this building is equipped with a separate switch or occupancy sensor device for each area with floor-to-ceiling walls.		
X	131(b)	Uniform Reduction for Individual Rooms: All rooms and areas greater than 100 square feet and more than 0.8 watts per square foot of lighting load shall be controlled with bi-level switching for uniform reduction of lighting within the room.		
X	131(c)	Daylight Area Control: All rooms with windows and skylights that are greater than 250 square feet and that allow for the effective use of daylight in the area shall have 50% of the lamps in each daylit area controlled by a separate switch; or the effective use of daylight cannot be accomplished because the windows are continuously shaded by a building on the adjacent lot. Diagram of shading during different times of the year is included on plans.		
X	131(e)	Display Lighting: Display lighting shall be separately switched on circuits that are 20 amps or less.		

MECHANICAL MANDATORY MEASURES — Part of 2 — MECH-MM

PROJECT NAME: KFC / A & W
DATE: 6/21/2006

		DESCRIPTION	Designer	Enforcement
		Equipment and Systems Efficiencies		
X	111	Any appliance for which there is a California standard established in the Appliance Efficiency Regulations will comply with the applicable standard.		
X	115(a)	Fan type central furnaces shall not have a pilot light.		
X	123	Piping, except that conveying fluids at temperatures between 60 and 105 degrees Fahrenheit, or within HVAC equipment, shall be insulated in accordance with Standards Section 123.		
X	124	Air handling duct systems shall be installed and insulated in compliance with Sections 601, 603 and 604 of the Uniform Mechanical Code.		
		Controls		
	122(e)	Each space conditioning system shall be installed with one of the following:		
X	122(e)1A	Each space conditioning system serving building types such as offices and manufacturing facilities (and all others not explicitly exempt from the requirements of Section 112 (d)) shall be installed with an automatic time switch with an accessible manual override that allows operation of the system during off-hours for up to 4 hours. The time switch shall be capable of programming different schedules for weekdays and weekends and have program backup capabilities that prevent the loss of the device's program and time setting for at least 10 hours if power is interrupted; or		
X	122(e)1B	An occupancy sensor to control the operating period of the system; or		
X	122(e)1C	A 4-hour timer that can be manually operated to control the operating period of the system.		
X	122(e)2	Each space conditioning system shall be installed with controls that temporarily restart and temporarily operate the system as required to maintain a setback heating and/or a setup cooling thermostat setpoint.		
X	122(g)	Each space conditioning system serving multiple zones with a combined conditioned floor area more than 25,000 square feet shall be provided with isolation zones. Each zone: shall not exceed 25,000 square feet; shall be provided with isolation devices, such as valves or dampers, that allow the supply of heating or cooling to be setback or shut off independently of other isolation areas; and shall be controlled by a time control device as described above.		
X	122(a&b)	Each space conditioning system shall be controlled by an individual thermostat that responds to temperature within the zone. Where used to control heating, the control shall be adjustable down to 55 degrees F or lower. For cooling, the control shall be adjustable up to 85 degrees F or higher. Where used for both heating and cooling, the control shall be capable of providing a deadband of at least 5 degrees F within which the supply of heating and cooling is shut off or reduced to a minimum.		
X	122(c)	Thermostats shall have numeric setpoints in degrees Fahrenheit (F) and adjustable setpoint stops accessible only to authorized personnel.		
	112(b)	Heat pumps shall be installed with controls to prevent electric resistance supplementary heater operation when the heating load can be met by the heat pump alone.		

MECHANICAL MANDATORY MEASURES — Part 2 of 2 — MECH-MM

PROJECT NAME: KFC / A & W
DATE: 6/21/2006

		Description	Designer	Enforcement
		Ventilation		
X	121(e)	Controls shall be provided to allow outside air dampers or devices to be operated at the ventilation rates as specified on these plans.		
X	122(f)	Gravity or automatic dampers interlocked and closed on fan shutdown shall be provided on the outside air intakes and discharges of all space conditioning and exhaust systems.		
X	122(f)	All gravity ventilating systems shall be provided with automatic or readily accessible manually operated dampers in all openings to the outside, except for combustion air openings.		
X	121(f)1	Air Balancing: The system shall be balanced in accordance with the National Environmental Balancing Bureau (NEBB) Procedural Standards (1993), or Associated Air Balance Council (AABC) National Standards (1989); or		
X	121(f)2	Outside Air Certification: The system shall provide the minimum outside air as shown on the mechanical drawings, and shall be measured and certified by the installing licensed C-20 mechanical contractor and certified by (1) the design mechanical engineer, (2) the installing licensed C-20 mechanical contractor, or (3) the person with overall responsibility for the design of the ventilation system; or		
X	121(f)3	Outside Air Measurement: The system shall be equipped with a calibrated local or remote device capable of measuring the quantity of outside air on a continuous basis and displaying that quantity on a readily accessible display device; or		
X	121(f)4	Another method approved by the Commission.		
		Service Water Heating Systems		
X	113(b)2	If a circulating hot water system is installed, it shall have a control capable of automatically turning off the circulating pump(s) when hot water is not required.		
X	113(b)3B	Lavatories in restrooms of public facilities shall be equipped with controls to limit the outlet temperature to 110 degrees F.		
X	113(b)3C	Lavatories in restrooms of public facilities shall be equipped with one of the following:		
		Outlet devices that limit the flow of hot water to a maximum of 0.5 gallons per minute.		
		Foot actuated control valves, and outlet devices that limit the flow of hot water to a maximum of 0.75 gallons per minute.		
		Proximity sensor actuated control valves, and outlet devices that limit the flow of hot water to a maximum of 0.75 gallons per minute.		
		Self-closing valves, and outlet devices that limit the flow of hot water to a maximum of 2.5 gallons per minute, and 0.38 gallons/cycle (circulating system).		
		Self-closing valves, and outlet devices that limit the flow of hot water to a maximum of 2.5 gallons per minute, and 0.50 gallons/cycle (non-circulating system).		
		Self-closing valves, and outlet devices that limit the flow of hot water to a maximum of 2.5 gallons per minute, and 0.75 gallons/cycle (foot switches and proximity sensor controls).		

CERTIFICATE OF COMPLIANCE (Part 1 of 2) OLTG-1-C

PROJECT NAME: KFC / A & W
DATE: 6/21/2006
PROJECT ADDRESS: 3144 S. Bascom Avenue San Jose
PRINCIPAL DESIGNER - LIGHTING: Vincent & Murphy, Inc.
TELEPHONE:
Building Permit #:
DOCUMENTATION AUTHOR: ENERGY CALC C0.
TELEPHONE: (415) 457-0990
Checked by/Date
Enforcement Agency Use

GENERAL INFORMATION

DATE OF PLANS
OUTDOOR LIGHTING ZONE: LZ1 LZ2 X LZ3 LZ4
FUNCTION TYPE: X OUTDOOR LIGHTING; OUTDOOR SIGNS; INDOOR SIGNS
PHASE OF CONSTRUCTION: X NEW CONSTRUCTION; ADDITION; ALTERATION

STATEMENT OF COMPLIANCE

This Certificate of Compliance lists the outdoor lighting system specifications need to comply with Title 24, Parts 1 and 6 of the California Code of Regulations.
This certificate applies only to building lighting requirements
The documentation preparer hereby certifies that the documentation is accurate and complete.

DOCUMENTATION AUTHOR: Tisha Stogsdill
SIGNATURE
DATE

The Principal Lighting Designer hereby certifies that the proposed outdoor lighting and signs design represented in this set of construction documents is consistent with the other compliance forms and worksheets, with the specifications, and with any other calculations submitted with this permit application. The proposed building has been designed to meet the lighting requirements contained in Sections 110, 119, 130 through 132, and 146 and 149 of Title 24, Part 6.

Please Check One: (These sections of the Business and Professions Code are printed in full in the Nonresidential Manual.)

X I hereby affirm that I am eligible under the provisions of Division 3 of the Business and Professions Code to sign this document as the person responsible for its preparation; and that I am licensed in the State of California as a civil engineer or electrical engineer, or I am a licensed architect

I affirm that I am eligible under the provisions of Division 3 of the Business and Professions Code by Section 5537.2 or 6737.3 to sign this document as the person responsible for its preparation; and that I am a licensed contractor performing this work

I affirm that I am eligible under the exemption to Division 3 of the Business and Professions Code to sign this document because it pertains to a structure or type of work described as exempt pursuant to Business and Professions Code Sections 5537, 5538 and 6737.1

PRINCIPAL LIGHTING DESIGNER - NAME: Vincent & Murphy, Inc.
SIGNATURE
DATE: 6/21/06
LIC #: C17928

LIGHTING COMPLIANCE FORMS & WORKSHEETS (Check box if worksheet is included)

X OLTG-1-C: Certificate of Compliance. Required on plans for all submittals for outdoor lighting. Part 2 of 2 may be incorporated in schedules on the plans

Either LTG-1-C or OLTG-1-C may be used for signs as follows:
1 Use LTG-1-C if the project consists solely of indoor signs.
2 Use LTG-1-C if the project consists of indoor lighting, outdoor or indoor signs, but no other outdoor lighting.
3 Use OLTG-1-C if the project consists solely of outdoor signs.
4 Use OLTG-1-C if the project consists of outdoor lighting, outdoor or indoor signs, but no other indoor lighting.

X OLTG-2-C: LIGHTING COMPLIANCE SUMMARY. Applicable parts required for ALL outdoor lighting allowances (Except Signs).

X OLTG-3-C: AREA CALCULATIONS WORKSHEET. Applicable parts required for all outdoor area calculations.

OLTG-4-C: SIGN LIGHTING COMPLIANCE. Required for all internally and externally illuminated signs, for both indoor and outdoor signs.

CERTIFICATE OF COMPLIANCE (Part 2 of 2) OLTG-1-C

PROJECT NAME: KFC / A & W
DATE: 6/21/2006

Lighting Schedules on Plans Show that Outdoor Lighting Meets Allowed Lighting Power

X Lighting power allowance for general site illumination on OLTG-2-C Part 1 of 4
Not Applicable

Lighting power allowance for local ordinances or for security multipliers on OLTG-2-C Part 2 of 4
X Not Applicable

Lighting power allowances for specific applications, other than vehicle service stations with canopies on OLTG-2-C Part 3 of 4
X Not Applicable

Lighting power allowances for vehicle service station canopies on OLTG-2-C part 4 of 4
X Not Applicable

Sign lighting compliance on OLTG-4-C
X Not Applicable

Mandatory Measures on Plans Show that Outdoor Lighting Meets Outdoor Lighting Controls And Equipment

X Installed lighting power has been determined in accordance with Section 130(c)1
Not Applicable

X All permanently installed luminaires with lamps rated 100 Watts either have a lamp efficacy of at least 80 lumins per Watt or are controlled by a motion sensor per Section 132(a)
Not Applicable

X All Luminaires with lamps rated greater than 175 Watts in hardscape area, including parking lots, building entrances, canopies, and all outdoor sales areas meet the Cutoff Requirements of Section 132(b)
Not Applicable

X All permanently installed outdoor lighting meets the control requirements of Section 132(c)1
Not Applicable

X Building facades, parking lots, garages, canopies, and outdoor sales areas meet the Multi-Level Lighting Requirements of Section 132(c)
Not Applicable

MANDATORY AUTOMATIC CONTROLS

CONTROL LOCATION (Room #)	CONTROL IDENTIFICATION	CONTROL TYPE (Auto Time Switch, Dimming, etc.)	AREA CONTROLLED	NOTE TO FIELD

CITY OF SAN JOSE
BUILDING DIVISION
B.P. #
DATE

Vincent+Murphy Incorporated
837 Fifth Avenue
San Rafael, Ca. 94901
(415) 451-2600
FAX 451-2595

LICENSED ARCHITECT HUGH EDWARD MURPHY No. C17928 Exp. 10/31/07 STATE OF CALIFORNIA

JOB NUMBER
H0510

SUBMITTALS

03/24/06	BLDG PC#1 SUBMITTAL

REVISIONS

1	04/28/06 P.C. RESPONSE #1

CONTRACT DATE:
BUILDING TYPE: KA60-Y04
PLAN VERSION: JAN 05 D
SITE NUMBER:
STORE NUMBER:

KFC / A&W
3144 S. BASCOM AVENUE
SAN JOSE, CA 95124-2022

ALL AMERICAN FOOD
KA60-Y04

ENERGY CALCULATIONS

T1.3

W:\Data\verman\2005\H0510_san jose_bascom\03_cd_current\003_KA_Y04_T1-3.dwg modified by Dhanngen at Jun 26, 2006 - 3:25pm

CERTIFICATE OF COMPLIANCE (Part 1 of 2) OLTG-1-C

PROJECT NAME: KFC / A & W
DATE: 4/26/2006
PROJECT ADDRESS: 3144 S. Bascom Avenue San Jose
Building Permit #
PRINCIPAL DESIGNER - LIGHTING: Vincent & Murphy, Inc.
TELEPHONE:
DOCUMENTATION AUTHOR: ENERGY CALC CO.
TELEPHONE: (415) 457-0990
Checked by/Date
Enforcement Agency Use

GENERAL INFORMATION

DATE OF PLANS
OUTDOOR LIGHTING ZONE: LZ1 [ ] LZ2 [ ] X LZ3 [ ] LZ4 [ ]
FUNCTION TYPE: X OUTDOOR LIGHTING [ ] OUTDOOR SIGNS [ ] INDOOR SIGNS
PHASE OF CONSTRUCTION: X NEW CONSTRUCTION [ ] ADDITION [ ] ALTERATION

STATEMENT OF COMPLIANCE

This Certificate of Compliance lists the outdoor lighting system specifications need to comply with Title 24, Parts 1 and 6 of the California Code of Regulations.
This certificate applies only to building lighting requirements.
The documentation preparer hereby certifies that the documentation is accurate and complete.

DOCUMENTATION AUTHOR: Tisha Stogsdill
SIGNATURE:
DATE:

The Principal Lighting Designer hereby certifies that the proposed outdoor lighting and signs design represented in this set of construction documents is consistent with the other compliance forms and worksheets, with the specifications, and with any other calculations submitted with this permit application. The proposed building has been designed to meet the lighting requirements contained in Sections 110, 119, 130 through 132, and 146 and 149 of Title 24, Part 6.

Please Check One (These sections of the Business and Professions Code are printed in full in the Nonresidential Manual.)

X I hereby affirm that I am eligible under the provisions of Division 3 of the Business and Professions Code to sign this document as the person responsible for its preparation, and that I am licensed in the State of California as a civil engineer or electrical engineer, or I am a licensed architect.

I affirm that I am eligible under the provisions of Division 3 of the Business and Professions Code by Section 5537.2 or 6737.3 to sign this document as the person responsible for its preparation and that I am a licensed contractor performing this work.

I affirm that I am eligible under the exemption to Division 3 of the Business and Professions Code to sign this document because it pertains to a structure or type of work described as exempt pursuant to Business and Professions Code Sections 5537, 5538 and 6737.1.

PRINCIPAL LIGHTING DESIGNER - NAME: Vincent & Murphy, Inc.
SIGNATURE:
DATE: 6/27/06
LIC. #: C17928

LIGHTING COMPLIANCE FORMS & WORKSHEETS (Check box if worksheet is included)

X OLTG-1-C: Certificate of Compliance. Required on plans for all submittals for outdoor lighting. Part 2 of 2 may be incorporated in schedules on the plans.

Either LTG-1-C or OLTG-1-C may be used for signs as follows:
1. Use LTG-1-C if the project consists solely of indoor signs.
2. Use LTG-1-C if the project consists of indoor lighting, outdoor or indoor signs, but no other outdoor lighting.
3. Use OLTG-1-C if the project consists solely of outdoor signs.
4. Use OLTG-1-C if the project consists of outdoor lighting, outdoor or indoor signs, but no other indoor lighting.

X OLTG-2-C: LIGHTING COMPLIANCE SUMMARY. Applicable parts required for ALL outdoor lighting allowances (Except Signs).

X OLTG-3-C: AREA CALCULATIONS WORKSHEET. Applicable parts required for all outdoor area calculations.
[ ] OLTG-4-C: SIGN LIGHTING COMPLIANCE. Required for all internally and externally illuminated signs, for both indoor and outdoor signs.

CERTIFICATE OF COMPLIANCE (Part 2 of 2) OLTG-1-C

PROJECT NAME: KFC / A & W
DATE: 4/26/2006

Lighting Schedules on Plans Show that Outdoor Lighting Meets Allowed Lighting Power

X Lighting power allowance for general site illumination on OLTG-2-C Part 1 of 4
Not Applicable

Lighting power allowance for local ordinances or for security multipliers on OLTG-2-C Part 2 of 4
X Not Applicable

Lighting power allowances for specific applications, other than vehicle service stations with canopies on OLTG-2-C Part 3 of 4
X Not Applicable

Lighting power allowances for vehicle service station canopies on OLTG-2-C part 4 of 4
X Not Applicable

Sign lighting compliance on OLTG-4-C
X Not Applicable

Mandatory Measures on Plans Show that Outdoor Lighting Meets Outdoor Lighting Controls And Equipment

X Installed lighting power has been determined in accordance with Section 130(c)1
Not Applicable

X All permanently installed luminaires with lamps rated 100 Watts either have a lamp efficacy of at least 60 lumins per Watt or are controlled by a motion sensor per Section 132(a)
Not Applicable

X All Luminaires with lamps rated greater than 175 Watts in hardscape area, including parking lots, building entrances, canopies, and all outdoor sales areas meet the Cutoff Requirements of Section 132(b)
Not Applicable

X All permanently installed outdoor lighting meets the control requirements of Section 132(c)1
Not Applicable

X Building facades, parking lots, garages, canopies, and outdoor sales areas meet the Multi-Level Lighting Requirements of Section 132(c)
Not Applicable

MANDATORY AUTOMATIC CONTROLS

CONTROL LOCATION (Room #)	CONTROL IDENTIFICATION	CONTROL TYPE (Auto Time Switch, Dimming, etc.)	AREA CONTROLLED	NOTE TO FIELD

LIGHTING COMPLIANCE SUMMARY (Part 1 of 4) OLTG-2-C

Project Name: KFC / A & W
Date: 4/26/2006

LIGHTING POWER ALLOWANCES - GENERAL SITE ILLUMINATION - (Table 147-A)

A	B	C	D	E	F	G	H	I	J	K	L	M	N	O
	Allotted Watts				Luminaire		Lamps/Ballasts			Installed Watts				
Lighting Application Category (Table 147-A)	Area (sf) or Length (LF)	Allowed LPD Watts/sf or Watts/LF	Allotted Watts (B x C)	Code	Description	Cutoff Designation	Lamp Type	Lamps per Luminaire	Watts per Lamp	Ballast per Luminaire	Luminaires per Circuit	Watts per Luminaire	No. of Luminaires	Installed Watts (K x N)
Parking Lot	20,676	0.15	3,101		180w Low Pressure Sodium	X	LPS180	1	180	10	220	0	X 8	1,780
Pedestrian	237	4.00	948		200w Wall Mount Incandescent	X	200W	1	200		200	0	X 11	2,200

Total Allotted Watts: 4,049
Total Installed Watts: 3,980

ILLUMINATED AREA CALCULATION WORKSHEET (Part 1 of 5) OLTG-3-C

PROJECT NAME: KFC / A & W
DATE: 4/26/2006

Hardscape - Method (i)

A. Hardscape for automotive vehicular use, including parking lots, driveways and site roads.

A	B	C	D	E	F	G	H
		Areas (SF) to Subtract from within the Illuminated Area					
Lighting Application (Table 147-B)	Actual Paved Area + 6' perimeter of adjacent unpaved land (includes planters and landscaped areas, unoccupied areas less than 10' wide that are enclosed by hardscape on at least 3 sides)	Area between poles or luminaires that are > 6 times the mounting height distance (if Applicable)	Overlapping areas of another application or luminaire	Building Areas	Areas obstructed by signs or other structures	Sub total of areas to subtract (C + D + E + F)	Illuminated Area (B - G)
Parking Lot	20,676	0	0	0	0	0	20,676

B. Hardscape for pedestrian use, including plazas, sidewalks, walkways and bikeways

A	B	C	D	E	F	G	H
		Areas (SF) to Subtract from within the Illuminated Area					
Lighting Application (Table 147-B)	Actual Paved Area + 6' of unpaved land on either side of the walkway or actual area of contiguous paved area before reaching adjacent grounds	Area between poles or luminaires that are > 6 times the mounting height distance (if Applicable)	Overlapping areas of another application or luminaire	Building Areas	Areas obstructed by signs or other structures	Sub total of areas to subtract (C + D + E + F)	Illuminated Area (B - G)

Checklist

Section 147 (c) 1 B - Each portion of all illuminated areas has been assigned only one lighting application, and the applications are consistent with actual use of the areas.

Section 147 (c) 1 A - General Illumination areas includes only those illuminated areas that are in the bounds of the Application and are within a square pattern around a luminaire that is six times the luminaire mounting height, with the luminaire in the middle of the pattern, less any areas that are within buildings, under canopies, beyond property lines, or obstructed by signs or other structures.

ILLUMINATED AREA CALCULATION WORKSHEET (Part 2 of 5) OLTG-3-C

PROJECT NAME: KFC / A & W
DATE: 4/26/2006

A. Hardscape Method ii

Hardscape for driveways, site roads, sidewalks, walkways and bikeways

A	B
List Specific Application (Table 147-A)	Length of 25' wide path incorporating as much of the paved area as possible
Pedestrian	237

Checklist

Section 147 (c) 1 B - Each portion of all illuminated areas has been assigned only one lighting application, and the applications are consistent with actual use of the areas.

Section 147 (c) 1 B Method ii - General Illumination areas for site roadway, driveway, sidewalk, walkway, or bikeway includes only those illuminated areas that are in the bounds of the Application and includes a 25 foot wide area running along the axis of the path of travel and much of the paved area as possible.

B. Building Entrances without Canopies

A	B	C
Width of Door plus 3 feet on each side	Smaller of 18 ft or distance to the edge of the property line	Area (sf) (A x B)

Checklist

Section 147 (c) 1 B - Each portion of all illuminated areas has been assigned only one lighting application, and the applications are consistent with the actual use of the areas.

Section 147 (c) 1 A - General illumination areas includes only those illuminated areas that in the bounds of the Application and are with a square pattern around a luminaire that is six times the luminaire mounting height, with the luminaire in the middle of the pattern, less any areas that are within buildings, under canopies, beyond property lines, or obstructed by a signs or other structures.

CITY OF SAN JOSE
BUILDING DIVISION
B.P. #
DATE

Vincent+Murphy Incorporated
637 Fifth Avenue
San Rafael, Ca. 94901
(415) 451-2500
FAX 451-2595

LICENSED ARCHITECT HUGH EDWARD MURPHY No. C17928 REN. 10/31/07 STATE OF CALIFORNIA

JOB NUMBER
H0510

SUBMITTALS

03/24/06	BLDG PC#1 SUBMITTAL

REVISIONS

1	04/28/06 P C RESPONSE #1

CONTRACT DATE:
BUILDING TYPE: KA60-Y04
PLAN VERSION: JAN 05 D
SITE NUMBER:
STORE NUMBER:

KFC / A&W
3144 S. BASCOM AVENUE
SAN JOSE, CA 95124-2022

All Aluminum Foam

KA60-Y04

ENERGY CALCULATIONS

T1.4

W:\Data\harman\2005\H0510_asn jose_bascom\03_cd_current\004_KA_Y04_T1-4.dwg modified by Dhanagon at Jun 26, 2006 - 3:25pm

LEGAL DESCRIPTION:

THE LAND REFERRED TO HEREIN BELOW IS SITUATED IN THE CITY OF SAN JOSE, COUNTY OF SANTA CLARA, STATE OF CALIFORNIA AND IS DESCRIBED AS FOLLOWS:

ALL OF PARCEL 1 AND A PORTION OF PARCEL 2, AS SAID PARCELS ARE SHOWN UPON THAT CERTAIN "PARCEL MAP", RECORDED JANUARY 31, 1966, BOOK 205 OF MAPS AT PAGE 6, SANTA CLARA RECORDS, AND MORE PARTICULARLY DESCRIBED AS FOLLOWS:

BEGINNING AT A POINT ON THE SOUTHEASTERLY LINE OF BASCOM AVENUE, SAID POINT BEING ALSO THE MOST WESTERLY CORNER OF SAID PARCEL 1, THENCE ALONG SAID SOUTHEASTERLY LINE NORTH 36°25'45" EAST 8.00 FEET; THENCE ALONG THE ARC OF A TANGENT CURVE TO THE LEFT, WITH A RADIUS OF 5077.00 FEET, THROUGH A CENTRAL ANGLE OF 1°53'18" AN ARC LENGTH OF 167.33 FEET TO A CORNER OF SAID PARCEL 2; THENCE SOUTH 59°04'30" EAST 134.58 FEET TO THE SOUTHEASTERLY LINE OF SAID PARCEL 2; THENCE ALONG SAID SOUTHEASTERLY LINE SOUTH 44°01'24" WEST 73.44 FEET; THENCE SOUTH 36°25'45" WEST 133.11 FEET TO THE SOUTHERLY CORNER OF PARCEL 1; THENCE NORTH 45°17'00" WEST 122.78 FEET TOT HE POINT OF BEGINNING.

A.P.N. 414-14-075 & 414-14-076

NOTES:

1. TITLE REPORT FOR THIS SURVEY IS BASED ON FIDELITY NATIONAL TITLE COMPANY PRELIMINARY REPORT, TITLE No. 05-27004527, DATED JUNE 3, 2005.
2. THE TITLE REPORT DOES NOT REFLECT ANY EASEMENTS.
3. AREA A.P.N. 414-14-075 = 0.25± ACRES
   AREA A.P.N. 414-14-076 = 0.29± ACRES
   TOTAL AREA = 0.54± ACRES

BASIS OF BEARINGS:

THE BASIS OF BEARINGS FOR THIS SURVEY ARE THE SAME AS 22 P.M. 28 DATED AUGUST 30, 1984, DERIVED FROM MONUMENTS SHOWN ON 15 SURVEYS 62, DATED MARCH 12, 1979, BETWEEN MONUMENTS "F2" AND "F3" HAVING A BEARING OF SOUTH 87°37'06" WEST.

PROJECT BENCHMARK:

THE LETTER "X" IN THE WORD "PHOENIX" ON TOP OF THE CATCH BASIN, LOCATED AT THE NORTHEAST RETURN OF CAMDEN AVENUE AT WILLESTER AVENUE. CITY OF SAN JOSE BENCH MARK NUMBER 467-S, HAVING AN ELEVATION OF 232.87 FEET, MEAN SEA LEVEL.

SURVEYOR'S STATEMENT:

I HEREBY STATE TO HARMAN MANAGEMENT THAT THIS MAP REPRESENTS A SURVEY BY ME OR UNDER MY DIRECTION ON THE 30TH DAY OF JUNE 2005, OF THE REAL PROPERTY DESCRIBED HEREON AND THAT THE IMPROVEMENTS LOCATED HEREON, IF ANY, HAVE BEEN SHOWN AS LOCATED AND THERE ARE NO KNOWN ENCROACHMENTS UPON SAID REAL ESTATE BY ANY IMPROVEMENTS LOCATED ON, OR FENCES OR WALLS ENCLOSING ADJACENT PROPERTIES, EXCEPT AS SHOWN.

DATED THIS 20TH DAY OF JULY, 2005.

CRAIG C. BOWERS, P.L.S. 7049
LICENSE EXPIRATION DATE: 12/31/06

LEGEND & SYMBOLS

CTV	CABLE TELEVISION
DI	DRAIN INLET
DS	DOWN SPOUT
FFE	FINISH FLOOR ELEVATION
G	GAS
INV	INVERT
OH	OVER HEAD WIRES
PRES V.LV	PRESSURE VALVE
SD	STORM DRAIN
SDMH	STORM DRAIN MAN HOLE
SS	SANITARY SEWER
SSMH	SANITARY SEWER MAN HOLE
TEL MH	TELEPHONE MAN HOLE
TYP	TYPICAL
WV	WATER VALVE
	SIGN
	CLEAN OUT
	SITE LIGHT
	METER BOX
	POWER POLE
	FIRE HYDRANT
	STREET LIGHT

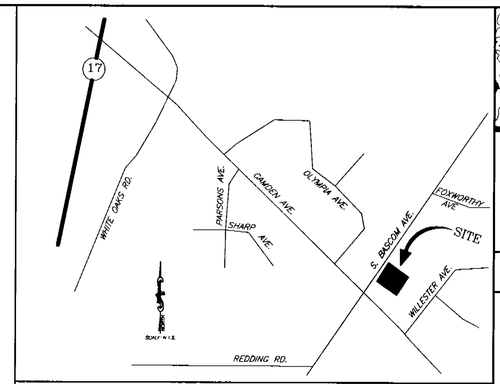

VICINITY MAP: NOT TO SCALE

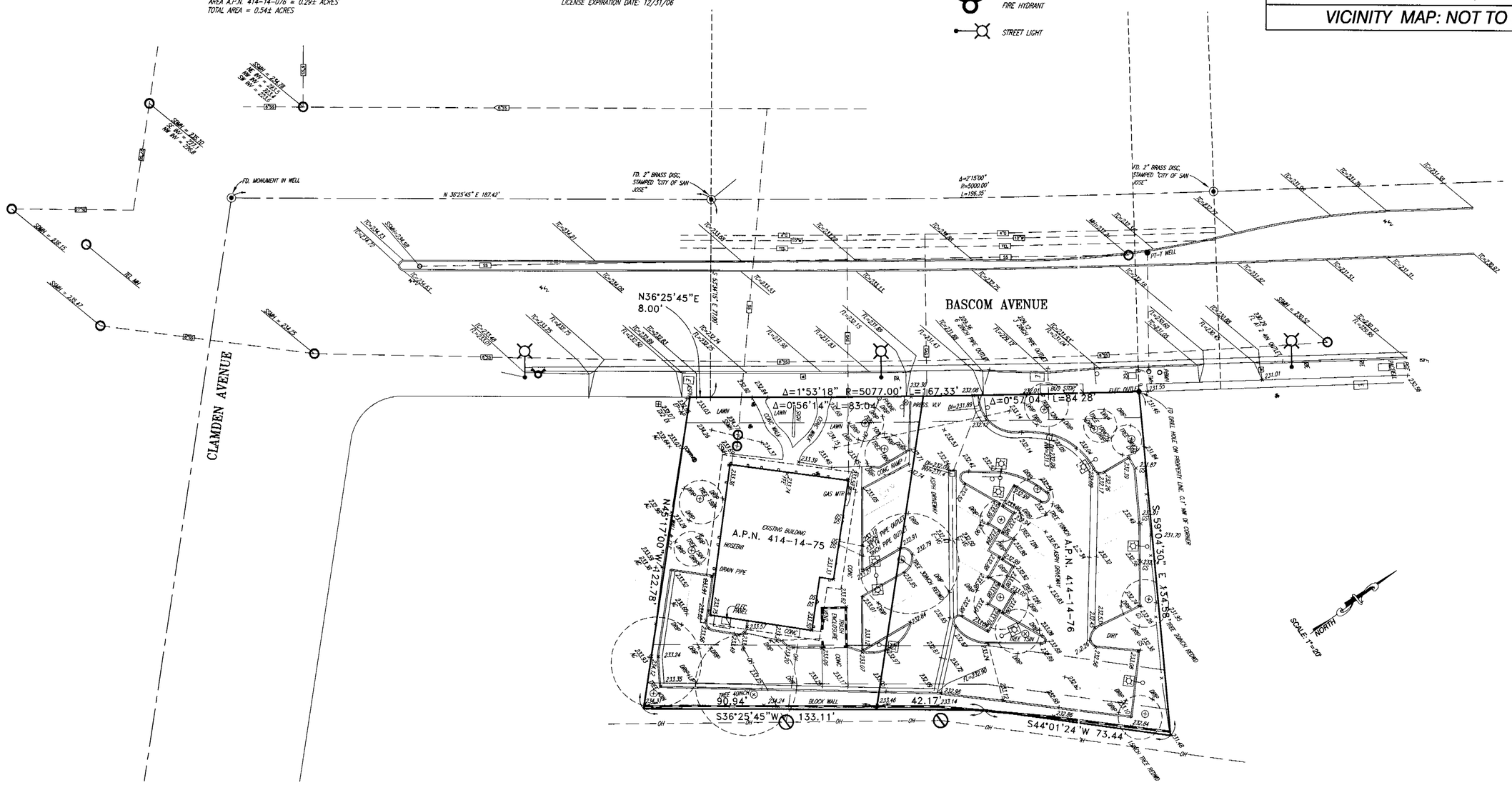

ALL AMERICAN FIRE

Harman Management, Inc.
199 First Street, Suite 212
Los Altos, CA 94022
650-941-5681

Vincent+Murphy Incorporated
637 Fifth Avenue
San Rafael, Ca. 94901
(415) 451-2500
FAX 451-2595

JOB NUMBER
H0510

PROFESSIONAL LAND SURVEYOR
CRAIG C. BOWERS
Exp. 12-31-06
No. 7049
STATE OF CALIFORNIA

DESIGN SURVEY

PARCEL 1 & PORTION PARCEL 2, 205 P.M. 6
3104 & 3144 S. BASCOM AVENUE
SAN JOSE, CA. 95124-2022
APN# 414-14-075 & 414-14-076

RECORD DATES

DATE	DESCRIPTION

REVISIONS

NO.	DATE	DESCRIPTION

DATE 7/20/05

BUILDING TYPE

PROTOTYPE ISSUE DATE

STORE NAME
JIM & JASMINE #238

SHEET NUMBER
1 OF 1

GENERAL NOTES:

1. THESE PLANS AND SPECIFICATIONS ARE SUBJECT TO MODIFICATION DURING CONSTRUCTION WHEN CONDITIONS DEVELOP THAT WERE NOT APPARENT DURING THE DESIGN AND PREPARATION OF THESE PLANS. ALL MODIFICATIONS MUST BE APPROVED BY LOCAL JURISDICTION PRIOR TO CONSTRUCTION AND/OR IMPLEMENTATION.

2. BEFORE COMMENCEMENT OF WORK, THE CONTRACTOR SHALL REVIEW ALL PLANS AND SPECIFICATIONS AND THE JOB SITE. THE CONTRACTOR SHALL NOTIFY THE OWNER AND THE ENGINEER WHO PREPARED THE PLANS OF ANY DISCREPANCIES THAT MAY REQUIRE MODIFICATION TO THESE PLANS OR OF ANY FIELD CONFLICTS.

3. IN THE EVENT OF ANY DISCREPANCY BETWEEN ANY DRAWING AND THE FIGURES WRITTEN THEREON, THE FIGURES SHALL BE TAKEN AS CORRECT.

4. SHOULD IT APPEAR THAT THE WORK TO BE DONE OR ANY MATTER RELATIVE THERETO IS NOT SUFFICIENTLY DETAILED OR EXPLAINED ON THESE PLANS, THE CONTRACTOR SHALL CONTACT THE ENGINEER FOR SUCH FURTHER EXPLANATIONS AS MAY BE NECESSARY.

5. CONTRACTOR AGREES THAT IN ACCORDANCE WITH GENERALLY ACCEPTED CONSTRUCTION PRACTICES, CONTRACTOR WILL BE REQUIRED TO ASSUME SOLE AND COMPLETE RESPONSIBILITY FOR JOB SITE CONDITIONS DURING THE COURSE OR CONSTRUCTION OF THE PROJECT, INCLUDING SAFETY OF ALL PERSONS AND PROPERTY. THIS REQUIREMENT SHALL BE MADE TO APPLY CONTINUOUSLY AND NOT BE LIMITED TO NORMAL WORKING HOURS. CONTRACTOR FURTHER AGREES TO DEFEND, INDEMNIFY, AND HOLD THE OWNER AND DESIGN PROFESSIONAL HARMLESS OF ANY AND ALL LIABILITY, REAL OR ALLEGED IN CONNECTION WITH THE PERFORMANCE OF WORK ON THIS PROJECT, ACCEPTING LIABILITY ARISING FROM THE SOLE NEGLIGENCE OF THE OWNER OR DESIGN PROFESSIONAL.

6. CONTRACTOR SHALL OBTAIN ENCROACHMENT PERMITS PRIOR TO COMMENCING CONSTRUCTION INVOLVING RIGHT OF WAYS, AND FOR THE CONSTRUCTION, MODIFICATION, OR CONNECTION TO FACILITIES. ALL WORKMANSHIP, EQUIPMENT AND MATERIALS SHALL CONFIRM TO LOCAL JURISDICTION STANDARDS AND SPECIFICATIONS.

7. TRAFFIC CONTROL SHALL BE PROVIDED IN ACCORDANCE WITH THE CITY TRANSPORTATION DEPARTMENT AND SHALL BE OUTLINED IN A TRAFFIC CONTROL PLAN PROVIDED BY THE CONTRACTOR.

8. THE CONTRACTOR SHALL PROVIDE ALL LIGHTS, SIGNS, BARRICADES, FLAGMEN, OR OTHER DEVICES NECESSARY TO PROVIDE FOR PUBLIC SAFETY.

9. WHERE SOIL OR GEOLOGIC CONDITIONS ENCOUNTERED IN GRADING OPERATIONS ARE DIFFERENT FROM THOSE ANTICIPATED IN THE SOIL AND GEOLOGICAL INVESTIGATION REPORT, OR WHERE CONDITIONS WARRANT CHANGES TO THE RECOMMENDATIONS CONTAINED THEREIN, A REVISED SOIL OR GEOLOGIC REPORT SHALL BE SUBMITTED FOR APPROVAL AND SHALL BE ACCOMPANIED BY AN ENGINEER'S OPINION AS TO THE SAFETY OF THE SITE FROM THE POSSIBILITY OF LAND SLIPPAGE, SETTLEMENT AND SEISMIC ACTIVITY.

GRADING AND DRAINAGE:

1. THE FORMS FOR CONCRETE SIDEWALKS, CURBS, GUTTERS, AND DRIVEWAYS THAT ARE TO BE CONSTRUCTED TO CONFORM TO EXISTING ROADS SHALL BE INSTALLED TO THE GRADES SHOWN ON THESE PLANS. PRIOR TO PLACING CONCRETE, THE FORMS SHALL BE INSPECTED AND APPROVED BY LOCAL JURISDICTION FOR CONFORMANCE TO EXISTING ROAD IMPROVEMENTS. GRADES OF NEW IMPROVEMENTS ARE SUBJECT TO FIELD ADJUSTMENT TO FIT CONDITIONS.

2. THE CONTRACTOR SHALL BE RESPONSIBLE FOR MATCHING EXISTING FACILITIES TO AVOID ANY ABRUPT OR APPARENT CHANGES IN GRADES OR CROSS SLOPES, LOW SPOTS, OR HAZARDOUS CONDITIONS.

3. ALL GRADING, BACKFILLING, EXCAVATION, ETC.., SHALL BE IN ACCORDANCE WITH THE RECOMMENDATIONS SET FORTH IN THE GEOTECHNICAL INVESTIGATION REPORTS. REFER TO THESE REPORTS FOR ADDITIONAL INFORMATION NOT TRANSFERRED TO THESE PLANS.

4. THE CONTRACTOR SHALL NOT DISTURB ANY PERMANENT SURVEY POINTS WITHOUT THE CONSENT OF LOCAL JURISDICTION. ANY POINTS DESTROYED SHALL BE REPLACED BY A LICENSED SURVEYOR AT THE CONTRACTOR'S EXPENSE.

5. WHERE UNSTABLE OR UNSUITABLE MATERIALS ARE ENCOUNTERED DURING SUBGRADE PREPARATION, THE AREA IN QUESTION SHALL BE OVER EXCAVATED AND REPLACED BY SELECT BACKFILL MATERIAL AS DIRECTED IN THE FIELD BY THE ENGINEER.

6. THE OWNER WILL, AT HIS SOLE EXPENSE, MAKE TESTS OVER THE SOIL ON WHICH THE ROAD SURFACING AND BASE IS TO BE CONSTRUCTED AND FURNISH THE TEST REPORTS TO THE PROJECT ENGINEER FOR USE IN DETERMINING THE STRUCTURAL DESIGN OF THE ROADBED.

7. A REPRESENTATIVE OF THE SOILS ENGINEER SHALL BE ON THE SITE DURING GRADING OPERATIONS AND SHALL OBSERVE THE GRADING AND IDENTIFY AND CONDITIONS THAT SHOULD BE CORRECTED AND RECOMMEND CORRECTIVE MEASURES TO THE CONTRACTOR.

8. GRADING AT THE BOUNDARIES SHALL BE DONE SO AS NOT TO OBSTRUCT THE RUNOFF OF STORM WATERS FROM ADJACENT PROPERTIES.

STANDARD CONSTRUCTION NOTES:

1. ALL MATERIAL AND WORK SHALL CONFORM TO CITY SPECIFICATIONS AND PLANS. THE IMPROVEMENTS ARE SUBJECT TO THE INSPECTION AND APPROVAL OF THE CITY PUBLIC WORKS DEPARTMENT. CONTACT THE CITY OFFICE TWO WORKING DAYS (48 HOURS) PRIOR TO THE START OF ANY WORK TO ARRANGE FOR INSPECTION.

2. PRIOR TO EXCAVATING NEAR ANY UNDERGROUND UTILITIES, CALL U.S.A. AT LEAST FORTY-EIGHT (48) HOURS IN ADVANCE AT PHONE (800) 624-2444.

3. THESE PLANS HAVE BEEN CHECKED BY THE CITY AND/OR ITS AUTHORIZED REPRESENTATIVE, BUT SUCH CHECKING AND/OR APPROVAL DOES NOT RELIEVE THE DEVELOPER FROM HIS/HER RESPONSIBILITY TO CORRECT ERRORS, OMISSIONS OR MAKE CHANGES REQUIRED BY CONDITIONS DISCOVERED IN THE FIELD DURING THE COURSE OF CONSTRUCTION.

4. REFER TO THE FINAL MAP OF THIS TRACT FOR PROPERTY LINE DATA.

5. CONTRACTOR SHALL CONTROL DUST AT ALL TIMES DURING CONSTRUCTION AS REQUIRED BY THE CITY.

6. ALL CONSTRUCTION STAKING FOR CURB, GUTTER AND SIDEWALK, SANITARY SEWERS, STORM DRAINS, WATER LINES, FIRE HYDRANTS, ELECTROLIERS, ETC. SHALL BE DONE UNDER THE DIRECTION OF A REGISTERED CIVIL ENGINEER OR LICENSED LAND SURVEYOR.

7. ALL EXISTING UTILITIES MAY NOT BE SHOWN. THE CONTRACTOR SHALL TAKE PRECAUTIONARY MEASURES TO PROTECT THESE UTILITIES. THE CONTRACTOR SHALL DO NO EXCAVATION UNTIL ALL UTILITY AGENCIES AND THE LOCAL JURISTICTION HAVE BEEN NOTIFIED AND HAVE BEEN GIVEN THE OPPORTUNITY TO MARK THEIR FACILITES IN THE FIELD.

8. ALL LINES ABANDONED DURING CONSTRUCTION SHALL BE REMOVED.

9. BUILDING SERVICES, FIRE HYDRANT LATERALS, GAS AND TELEPHONE LINES, AND ALL OTHER UNDERGROUND UTILITIES SHALL BE INSTALLED PRIOR TO CURB, GUTTER AND SIDEWALK CONSTRUCTION AND STREET PAVING.

10. TESTING: ALL INDEPENDENT LABORATORY INSPECTION CALLED FOR BY THE CITY ENGINEER WILL BE PAID FOR BY THE DEVELOPER OR CONTRACTOR.

11. PAVEMENT STRIPING SHALL BE IN ACCORDANCE WITH CITY STANDARDS.

12. ALL TRENCHES SHALL BE BACKFILLED IN ACCORDANCE WITH CITY STANDARDS.

13. EXISTING CURB AND SIDEWALK WITHIN THE PROJECT LIMITS THAT ARE DAMAGED OR DISPLACED, EVEN THOUGH THEY WERE NOT REMOVED, SHALL BE REPAIRED OR REPLACED PER CITY STANDARD DETAILS.

14. ASBESTOS CEMENT PIPE (ACP) OR FITTINGS SHALL NOT BE USED.

15. PRIOR TO TRENCHING FOR ANY SEWER, WATER, OR STORM DRAIN PIPE, THE CONTRACTOR SHALL VERIFY, IN THE FIELD, THE SIZE AND LOCATION OF THE EXISTING PIPE AT THE POINT OF CONNECTION. ANY DEVIATION FROM THE PLANS SHALL BE RESOLVED BY THE DESIGN ENGINEER PRIOR TO TRENCHING.

16. MANHOLES, VALVES, CLEANOUTS, ETC. SHALL BE BROUGHT TO FINISH GRADE BY THE UNDERGROUND CONTRACTOR AFTER THE FINAL PAVING COURSE IS PLACED.

STRIPING AND SIGNAGE NOTES:

1. ALL SIGNING SHALL CONFORM TO CITY STANDARDS.

2. ALL PAINTED LEGENDS SHALL CONFORM TO CAL-TRANS STANDARDS.

3. CURBS SHALL BE PAINTED RED 7.5 FEET EACH SIDE OF FIRE HYDRANT LOCATIONS.

4. NO PARKING SIGNS SHALL BE AT 45 DEGREE ANGLE TO ROAD.

5. ALL STOP SIGNS SHALL BE 30".

STORM DRAIN NOTES:

1. STORM DRAIN PIPE SIZES SHALL NOT BE CHANGED WITHOUT THE APPROVAL OF THE ENGINEER.

2. STORM DRAIN PIPE MATERIALS SHALL BE IN ACCORDANCE WITH CITY STANDARD SPECIFICATIONS.

3. FOR ALL CONSTRUCTION PROJECTS, CONTRACTOR SHALL FILE A NOTICE OF INTENTION (NOI) TO THE STATE WATER QUALITY BOARD. THIS IS PART OF THE NPDES PERMIT PROCESS. CONTRACTOR SHALL ALSO BE IN COMPLIANCE WITH CURRENT COUNTY CODES AND ORDINANCES. THE CONTRACTOR MAY FILE FOR A NOTICE OF EXEMPTION WITH THE STATE WATER QUALITY BOARD.

4. ALL CONSTRUCTION SITE ACTIVITES SHALL CONFORM TO THE STATE WATER RESOURCES CONTROL BOARD, NATIONAL POLLUTION DISCHARGE ELIMINATION SYSTEM (NPDES). WASTE DISCHARGE REQUIREMENTS FOR DISCHARGES OF STORM WATER RUNOFF ASSOCIATED WITH CONSTRUCTION ACTIVITY.

WATER NOTES:

1. ALL WATER LINES, INCLUDING THE EXISTING, SHALL BE PRESSURE-TESTED FOR LEAKS, DISINFECTED, FLUSHED AND TESTED FOR BACTERIA IN CONFORMANCE WITH CITY SPECIFICATIONS PRIOR TO FINAL ACCEPTANCE BY THE CITY.

2. ALL VALVES, TEES AND CROSSES TO BE FLANGED TO THEIR RESPECTIVE FITTINGS. WATER VALVES TO BE RESILIENT SEAT ONLY.

3. ALL VALVE STEMS MUST BE BROUGHT TO A MINIMUM OF FOUR FEET (4') BELOW FINISH GRADE WITH STEM EXTENSION UNITS.

4. THRUST BLOCKS SHALL BE PROVIDED AT ALL REQUIRED LOCATIONS ON WATER LINE IN ACCORDANCE WITH THE CITY SPECIFICATIONS AND DETAILS.

UTILITIES NOTES:

1. THE CONTRACTOR SHALL BE HELD RESPONSIBLE FOR ANY AND ALL DAMAGE TO EXISTING STRUCTURES AND/OR UTILITIES DURING CONSTRUCTION, PROPER REPAIR SHALL BE DONE TO THE SATISFACTION OF THE APPROPRIATE UTILITY COMPANY.

3. THE CONTRACTOR SHALL COORDINATE THE WORK TO AVOID CONFLICTS BETWEEN SEWERS, STORM DRAINS, AND WATER MAINS. TEMPORARY REPAIRS TO ALL TRENCHES WITHIN THE TRAVELED WAY ON EXISTING ROADS SHALL BE MADE WITHIN TWENTY-FOUR (24) HOURS OF TRENCH OPENING. MINIMUM TEMPORARY REPAIRS SHALL CONSIST OF BACKFILLING AND COMPACTING 6" OF AGGREGATE BASE AND 1" OF TEMPORARY ASPHALTIC SURFACING.

4. MINIMUM COVER FOR CONDUITS SHALL BE 36" UNLESS OTHERWISE SHOWN OR NOTED ON THESE PLANS.

5. EXISTING UNDERGROUND FACILITIES AS SHOWN ARE APPROXIMATE ONLY AND WERE OBTAINED FROM AVAILABLE UTILITY RECORDS. HOWEVER, THE ENGINEER ASSUMES NO RESPONSIBILITY FOR THEIR ACCURACY OR COMPLETENESS. IT SHALL BE THE CONTRACTOR'S RESPONSIBILITY TO CONTACT ALL LOCAL UTILITIES AND TO HAVE ALL FACILITIES LOCATED AND EXPOSED TO VERIFY THE CLEARANCE OF NEW PIPELINE CROSSINGS BEFORE CONSTRUCTION OF NEW PIPELINES COMMENCES.

6. ANY RELOCATION OF PUBLIC UTILITIES SHALL BE DONE IN ACCORDANCE WITH ANY AND ALL REQUIREMENTS OF THE UTILITY COMPANY AND WITH REGARD TO THE REQUIRED FEES, BONDS, PERMITS, WORKING CONDITIONS, ETC., OF SAID COMPANY.

7. ABANDONED UNDERGROUND STRUCTURES ENCOUNTERED SHALL BE REMOVED TO SUFFICIENT DEPTH TO ALLOW UNDERGROUND LINES TO CROSS.

8. PRIOR TO FINAL PREPARATION OF THE SUBGRADE AND PLACEMENT OF BASE MATERIAL, ALL UNDERGROUND UTILITY MAINS SHALL BE INSTALLED AND SERVICE CONNECTIONS STUBBED OUT BEYOND CURB LINE. SERVICES FROM PUBLIC UTILITIES AND SANITARY SEWERS SHALL BE MADE IN A MANNER AS WILL MINIMIZE THE DISTURBANCE OF STREET PAVEMENT AND SIDEWALK, CURB AND GUTTER WHEN THE SERVICE CONNECTIONS ARE MADE.

9. ALL MANHOLES, VALVES, AND MONUMENT FRAMES SHALL BE SET TO FINISH GRADE AFTER PAVING.

10. COMPACTION TESTS SHALL BE PERFORMED ON ALL TRENCHES AND STREET WORK TO VERIFY THAT COMPACTION CONFORMS TO CITY STANDARDS. ALL TESTING SHALL BE AT THE CONTRACTOR'S EXPENSE.

11. THE CONTRACTOR SHALL COMPLY WITH THE RULES AND REGULATIONS OF THE STATE CONSTRUCTION SAFETY ORDERS. TRENCHES SHALL BE SHORED IN ACCORDANCE WITH OSHA.

SEWER NOTES:

1. DIMENSIONS SHOWN ON PLANS ARE TO CENTERLINE OF PIPE AND/OR MANHOLES, UNLESS OTHERWISE NOTED.

2. ALL MANHOLES SHALL BE 48" IN DIAMETER, UNLESS OTHERWISE SHOWN.

3. MANHOLES LOCATED OUTSIDE OF PAVED AREAS SHALL HAVE RIM SET TWELVE INCHES (12") ABOVE GROUND SURFACE, OR TO GRADES AS NOTED.

4. MANHOLE VACUUM TESTING IF APPLICABLE, SHALL BE DONE SO PER ASTM C1244-93, WITH THE ADDITION OF THE FOLLOWING CONSTRAINT: A MINIMUM OF 9 INCHES OF MERCURY SHALL BE HELD FOR A MINIMUM TIME OF ONE MINUTE.

5. SANITARY SEWER MAINS SHALL BE CONSTRUCTED OF PVC SDR-35 WITH TYPE II BEDDING AND BACKFILL, UNLESS OTHERWISE NOTED.

6. CONTRACTOR SHALL USE FOUR FOOT (4') PIPE LENGTHS IN CURVED SECTIONS. JOINT DEFLECTION SHALL COMPLY TO CITY STANDARDS AND MANUFACTURES RECOMMENDATIONS

7. SEWER SERVICES SHALL BE CONSTRUCTED PER CITY STANDARDS. ANY SEWER SERVICE ENTERING A MANHOLE SHALL BE INSTALLED WITH THE INVERT ELEVATION OF THE SERVICE PIPE MATCHING THE CROWN ELEVATION OF THE EXIT SEWER EXCEPT WHEN AN INTERNAL DROP CONNECTION IS USED.

8. ALTERNATIVE FOR PVC SEWER SERVICE PIPE, FOUR INCHES (4"):

   a) ACRYLONITRILE-BUTADIENE-STYRENE (ABS) SOLID PIPE

   b) 4" ABS SOLID PIPE AND FITTINGS SHALL CONFORM TO AND MEET THE REQUIREMENTS OF ASTM DESIGNATION D2661, SDR 18.99, MINIMUM WALL THICKNESS 0.237 INCHES.

9. CONSTRUCTION OF A CLEANOUT TO GRADE FOR ALL SEWER SERVICES IS REQUIRED. CONSTRUCTION OF THE TOP 1' OF THE CLEANOUT RISER MAY BE DELAYED UNTIL THE INSTALLATION OF THE BUILDING SEWER AT THE OPTION OF THE DEVELOPER, EXCEPT WHERE THE WATER MAIN IS TO BE INSTALLED BEHIND THE SIDEWALK. IF THE CONSTRUCTION OF THE TOP 1' OF THE RISER IS DELAYED, THE LOCATION OF THE SERVICE SHALL ACCURATELY BE STAKED WITH A 4"x4" POST.

10. ANY WATER ENTERING THE SANITARY SEWER SYSTEM TO BE CONSTRUCTED UNDER THESE PLANS SHALL NOT BE DISCHARGED TO THE EXISTING SYSTEM. PLUGS MUST BE INSTALLED IN EXISTING MANHOLES AS NECESSARY TO PERMIT PUMPING THE NEW SYSTEM CLEAR OF WATER AND DEBRIS PRIOR TO ACCEPTANCE. CARE SHALL BE EXERCISED IN LOCATING PLUGS TO AVOID INTERRUPTING SERVICE CONNECTIONS. MORTAR AND BRICKS OR MECHANICAL DEVICE PLUGS MUST BE USED; INFLATABLE DEVICES ARE NOT SATISFACTORY.

ELECTRICAL NOTES:

1. REFER TO SITE ELECTRICAL PLAN FOR CONDUIT LOCATIONS.

TRENCHING AND RESURFACING NOTES:

1. UNSTABLE MATERIAL SHALL BE EXCAVATED AND STABILIZED WITH #3 ROCK (PER ASTM 33 OR APPROVED EQUAL) OR WITH CEMENT SLURRY/ CONCRETE AS APPROVED BY THE COUNTY ENGINEER.

2. ALL TRENCHES SHALL BE SHORED OR PROTECTED IN ACCORDANCE WITH OSHA AND OTHER STATE AND FEDERAL SAFETY CODES, REGULATIONS AND ORDINANCES.

3. FOR EXISTING STREETS, BACKFILL MATERIAL SHALL BE AGGREGATE BASE (95% RELATIVE COMPACTION 2'-0" BELOW THE PAVEMENT SURFACE) AND NATIVE BACKFILL (90% RELATIVE COMPACTION FOR THE REMAINING DEPTH TO THE PIPE BEDDING).

4. PLACEMENT OF AGGREATE BASE SHALL BE IN 12" LIFTS EVENLY PLACED AND MECHANICALLY COMPACTED TO RELATIVE DENSITY AS SPECIFIED. COMPACTION TESTS SHALL BE REQUIRED AT THE DISCRETION OF THE CITY ENGINEER. ALL COSTS RELATED TO THESE TESTS SHALL BE BORNE BY THE OWNER/CONTRACTOR/UTILITY COMPANY WHEN SUCH TESTS ARE REQUIRED. IF RESULTS OF THESE TESTS DO NOT MEET SPECIFIED REQUIREMENTS, BACKFILL SHALL BE EXCAVATED, REPLACED, COMPACTED AND RETESTED, IN CASE OF ONE SACK SLURRY MIX OR CONTROLLED DENSITY FILL, NO COMPACTION TEST WILL BE REQUIRED.

5. DROP HAMMER SHALL NOT BE USED TO CUT PAVEMENT.

6. ALL TRENCHES SHALL BE BACKFILLED AND TEMPORARILY PAVED AT THE END OF EACH WORKING DAY. THE USE OF STEEL PLATES MUST BE APPROVED BY THE CITY ENGINEER AT LEAST 48 HOURS IN ADVANCE.

7. MINIMUM OF 24 HOUR NOTICE SHALL BE REQUIRED FOR ALL CITY INSPECTIONS.

8. INITIAL CUT IN STREET PAVEMENT SHALL BE EQUAL TO THE WIDTH OF THE TRENCH WITH THE OPTION OF BEING JACK HAMMERED OR SAW CUT.

9. FINAL CUT IN STREET PAVEMENT SHALL BE 12" WIDER THAN THE TRENCH WIDTH AND SHALL BE MADE BY SAW CUTTING ONLY.

10. TEMPORARY BITUMINOUS SURFACING (CUT BACK) SHALL BE PLACED AND COMPACTED IMMEDIATELY ABOVE THE TRENCH FOLLOWING COMPACTION AND APPROVED BY THE CITY ENGINEER. MINIMUM DEPTH OF CUT BACK SHALL BE 2" OR AS SPECIFIED BY THE CITY ENGINEER. CUT BACK SHALL BE MAINTAINED IN A CONDITION SATISFACTORY TO THE CITY ENGINEER UP TO THE TIME THE FINAL PAVING IS PLACED ON TRENCH IN ACCORDANCE WITH NOTE #11.

11. FINAL PAVING ABOVE THE TRENCH SECTION SHALL BE PLACED WITHIN 14 DAYS OF ITS BACKFILL AND COMPACTION. EXTENSION MAY BE GRANTED BY THE CITY ENGINEER DUE TO WEATHER CONDITIONS. IN THE EVENT PERMANENT PAVING IS NOT DONE WITHIN 14 DAYS, THE CITY WILL CONSIDER THIS AS INCOMPLETE WORK AND WILL TAKE NECESSARY ACTION IN ACCORDANCE WITH PREVAILING CITY ORDINANCES AND POLICIES.

12. TEMPORARY CUT BACK SHALL BE REMOVED BEFORE PLACEMENT OF FINAL PAVING. FINAL PAVING SHALL BE PLACED ON UNDISTURBED PREVIOUSLY INSPECTED AND COMPACTED AGGREGATE BASE OR ONE SACK SLURRY MIX/ CONTROLLED DENSITY FILL. RECOMPACTION SHALL BE REQUIRED FOR ANY DISTURBED BASE OR SURFACE.

13. PROPER TRAFFIC CONTROLS AND COVERING OF TRENCHES SHALL BE MAINTAINED IN ACCORDANCE WITH CITY STANDARD SPECIFICATIONS.

14. ASPHALT CONCRETE SHALL BE IN ACCORDANCE WITH THE CITY STANDARD SPECIFICATIONS.

NOTES

ABBREV.	DESCRIPTION
AB	AGGREGATE BASE
AC	ASPHALT CEMENT
ACP	ASBESTOS CEMENT PIPE
BC	BEGIN CURVE
BFP	BACKFLOW PREVENTION ASSEMBLY
BSBL	BUILDING SETBACK LINE
BOW, BSW, BW	BACK OF SIDEWALK
BVC	BEGIN VERTICAL CURVE
C, CONC	CONCRETE
CB	CATCH BASIN
C&G	CURB AND GUTTER
CIP	CAST IRON PIPE, CAST IN PLACE
CL	CENTERLINE
CLF	CHAIN LINK FENCE
CO	CLEAN OUT
COR	CORNER
DEMO	DEMOLISH
DET	DETAIL
DI	DROP INLET
DIA	DIAMETER
DIP	DUCTILE IRON PIPE
DW	DRIVEWAY, DRY WELL
E	EAST, EXISTING
EC	END CURVE
ELEC	ELECTRICAL
ELEV	ELEVATION
EP	EDGE OF PAVEMENT
ER	END OF CURB RETURN
ES	EXTRA STRENGTH
ESMT	EASEMENT
EVC	END VERTICAL CURVE
EX	EXISTING
FE	FENCE
FF	FINISH FLOOR
FH	FIRE HYDRANT
FL	FLOWLINE
FOC	FACE OF CURB
FOW	FACE OF WALK, FRONT OF WALK
FTG	FOOTING, TOP OF FOOTING
FUT	FUTURE
G	GAS
GB	GRADE BREAK
GS	GROUND SHOT
GV	GAS VALVE, GATE VALVE
HDPE	HIGH DENSITY POLYETHYLENE
HORIZ	HORIZONTAL
HP	HIGH POINT
INV	INVERT
IR, IRR	IRRIGATION
JPOLE	JOINT UTILITY POLE
LF	LINEAR FEET
LP	LOW POINT
MATCH	MATCH EXISTING CONDITIONS
MAX	MAXIMUM
MH	MANHOLE
MIN	MINIMUM
N	NORTH, NEW
NG	NATIVE GROUND
NTS	NOT TO SCALE
OE	OILED EARTH
O/H	OVER-HEAD UTILITIES
O.L.R.P.	OVERLAND RELEASE POINT
P	PAVEMENT
PCC	POINT OF COMPOUND CURVE
PCC	PORTLAND CEMENT CONCRETE
PL	PROPERTY LINE
PNT	POINT
POC	POINT ON CURVE
PP	POWER POLE
PRC	POINT OF REVERSE CURVE
PRVC	POINT OF REVERSE VERTICAL CURVE
PT	POINT, POINT OF TANGENT
PUE	PUBLIC UTILITY EASEMENT
PVC	POLYVINYL CHLORIDE
R	RADIUS, RADIAL BEARING
RCP	REINFORCED CONCRETE PIPE
RDG	RIDGE
REQD	REQUIRED
R.O.W., R/W	RIGHT-OF-WAY
RP	RADIUS POINT
S	SOUTH, SLOPE
SD	STORM DRAIN
SDMH	STORM DRAIN MANHOLE
SS	SANITARY SEWER
SMH	SANITARY SEWER MANHOLE
SMH(T)	TERMINAL SEWER MANHOLE
STD	STANDARD
SW	SOUTHWEST, SIDEWALK
TBC	TOP BACK OF CURB
TC	TOP OF CURB
TEMP	TEMPORARY
TFOC	TOP FACE OF CURB
THRU	THROUGH
VERT	VERTICAL
VCP	VITRIFIED CLAY PIPE
VLLY	VALLEY
W	WEST, WATER
WM	WATER METER
WV	WATER VALVE

LIST OF ABBREVIATIONS

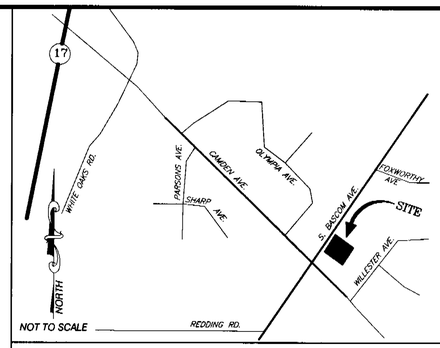

VICINITY MAP

DESCRIPTION	PROPOSED	EXISTING
SANITARY SEWER	SS	
STORM SEWER	SD	
GAS LINE	G	
WATER LINE	W	
TELEPHONE	TEL	
OVERHEAD UTILITIES	O/H	
ELECTRICAL CONDUIT	E	
IRRIGATION LINE	IR	
GAS VALVE	GV	
WATER VALVE	WV	
GRADES/ELEVATIONS	XX.XX XX	
PAD ELEVATION	148.4	
SLOPE/FLOW DIRECTION	S=X.X%	S=X.X%
CONTOUR LINE		
CENTERLINE		
PROPERTY LINE		
RIGHT OF WAY		
MANHOLE		
CATCH BASIN		
GAS METER	G	
WATER METER	W	
CURB AND GUTTER		
SIDEWALK		
DRIVEWAY		
FIRE HYDRANT		
SIGN		
SANITARY SEWER CLEAN OUT	CO	
UTILITY POLE		
GUARD RAIL		
BARRICADE		
FENCE		
WHEELCHAIR RAMP		
ELECTROLIER		
ELECTRICAL SERVICE PEDESTAL	E	
BLOW-OFF VALVE	BO	
MONUMENT WELL		
EX. TRAFFIC LIGHT		

SYMBOLS LEGEND

THE LETTER "X" IN THE WORD "PHOENIX" ON TOP OF THE CATCH BASIN, LOCATED AT THE NORTHEAST RETURN OF CAMDEN AVENUE AT WILLESTER AVENUE. CITY OF SAN JOSE BENCH MARK NUMBER 467-S, HAVING AN ELEVATION OF 232.87 FEET, MEAN SEA LEVEL.

BENCHMARK

ALL AMERICAN FOOD

Harman Management, Inc.
199 First Street, Suite 212
Los Altos, CA 94022
650-941-5661

A S S O C I A T E S
ARCHITECTURE & SURVEYING
6130 FREEPORT BLVD. SUITE 101 A
SACRAMENTO, CA. 95822
(916) 429-2553
FAX. (916) 429-2553

K. W. & ENGINEERING
2237 SCENIC DRIVE
MODESTO, CA. 95355
(209) 529-7804
FAX. (209) 529-7804

JOB NUMBER
05M011

REGISTERED PROFESSIONAL ENGINEER
ALLAN V. STEVENSON
No. C61758
exp. 6/30/07
CIVIL
STATE OF CALIFORNIA

STANDARD NOTES

ADDRESS:
3144 S. BASCOM AVE.
SAN JOSE, CA 95124-2022
APN# 414-14-075 & 076

RECORD DATES

DATE	DESCRIPTION

REVISIONS

NO.	DATE	DESCRIPTION
1	4/28/06	PC RESPONSE #1

DATE
06/22/06

BUILDING TYPE
KA60Y04

PROTOTYPE ISSUE DATE
JAN 05 D

STORE NAME
JM & JASMINE # 238

SHEET NUMBER
C1.0

GRADING 1 OF 5

W:\Data\harmon\2005\W0510_son jose_bascom\03_cd_current\005_C1-0_NOTES.dwg modified by Dhanngan at Jun 26, 2006 - 3:26pm

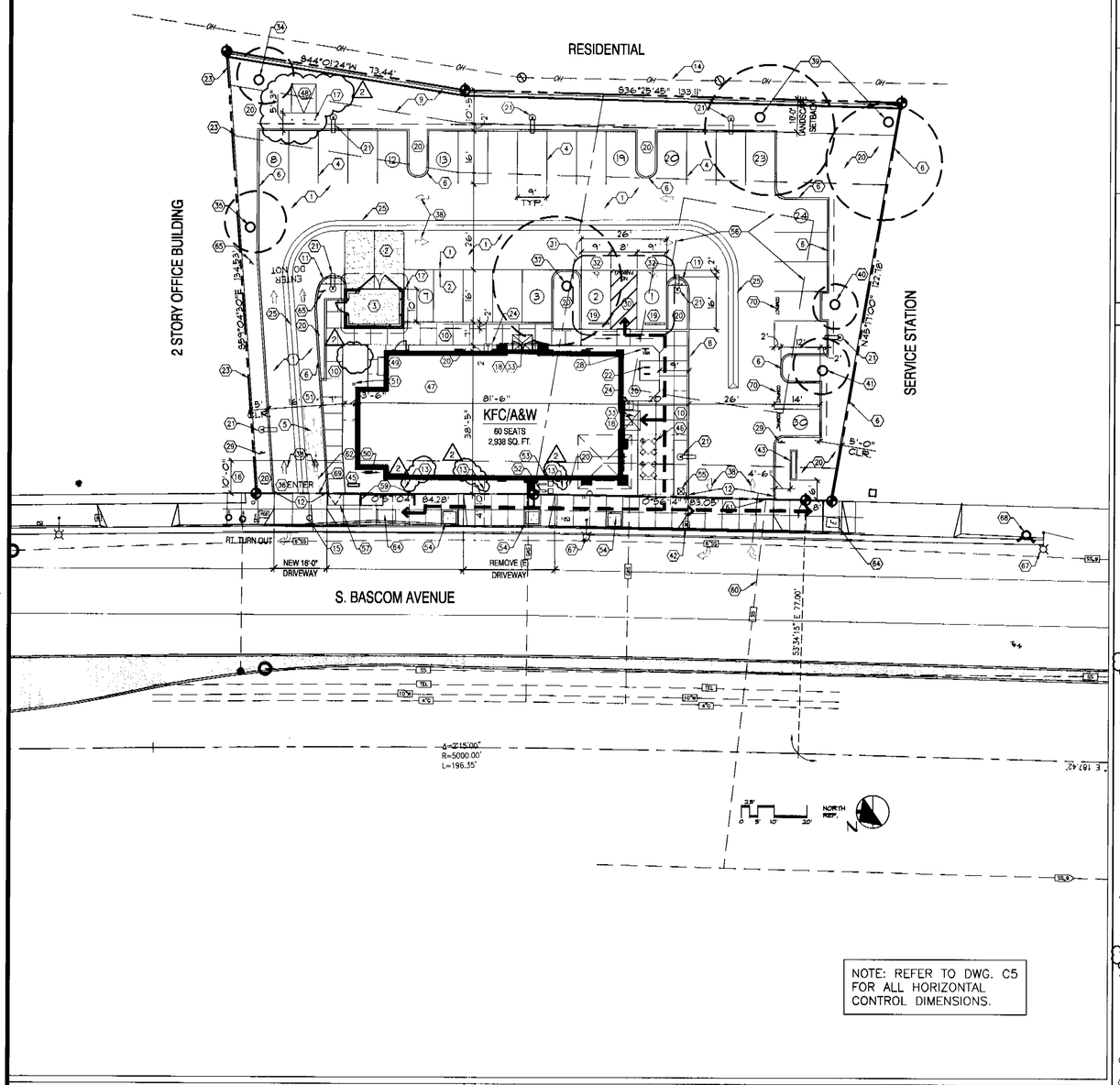

NOTE: REFER TO DWG. C5 FOR ALL HORIZONTAL CONTROL DIMENSIONS.

SITE PLAN

SCALE: 1"=20'

SIGN SCHEDULE

KEY NOTE	TYPE	SIZE	NO.	NON STD.
	FREESTANDING POLE	AREA= 0 S.F. HGT= 0 O.A.H.	0	
44	FREESTANDING MONUMENT	AREA= TBD S.F. HGT= TBD O.A.H.	0	X
*	BUILDING WALL MOUNTED	*REFER TO EXTERIOR ELEV'S.	8	X
43 43.1	MENU/PREVIEW BD. & SPEAKER		1 EA.	
42	CLEARANCE BAR TEXT= "CLEARANCE = 9'-10""		1	
45	DIRECTIONAL SIGN W/ LOGO	AREA= 7 S.F. HGT= 4' O.A.H.	X	
A	DRIVE THRU → / ← DRIVE THRU		1	
B	THANK YOU / EXIT ONLY		1	
C	ENTER → / ← ENTER		1	

SIGNAGE NOTES:

1. ALL SIGNAGE SHALL BE PERMITTED UNDER A SEPERATE SIGN PERMIT BY VENDOR.
2. G.C. TO PROVIDE ROUGH-IN ELECTRICAL AND FOUNDATIONS FOR ALL SIGNS (U.O.N.).
3. PROVIDE CONCRETE FOUNDATION FOR FREE-STANDING POLE/ MONUMENT SIGN. ROUGH ELECTRICAL: FINAL CONNECTION BY GC.
4. G.C. TO INSTALL MENU BOARD, PREVIEW BOARD, SPEAKER POST AND SOFFIT CLEARANCE SIGN.

SITE PLAN NOTES

1. REQUIRED PERMITS AND APPROVALS HAVE BEEN OBTAINED. NO CONSTRUCTION OR FABRICATION SHALL BEGIN UNTIL THE CONTRACTOR HAS RECEIVED AND THOROUGHLY REVIEWED ALL PLANS AND OTHER DOCUMENTS APPROVED BY ALL OF THE PERMITTING AUTHORITIES.
2. ALL WORK SHALL BE PERFORMED IN ACCORDANCE WITH THESE PLANS, SPECIFICATIONS AND THE REQUIREMENTS AND STANDARDS OF THE LOCAL GOVERNING AUTHORITY. THE SOILS REPORT AND RECOMMENDATIONS SET FORTH THEREIN ARE A PART OF THE REQUIRED CONSTRUCTION DOCUMENTS AND TAKE PRECEDENCE UNLESS SPECIFICALLY NOTED OTHERWISE ON THE PLANS. THE CONTRACTOR SHALL NOTIFY THE CONSTRUCTION MANAGER OF ANY DISCREPANCY BETWEEN THE SOILS REPORT & PLANS, ETC.
3. DEMOLITION/SITE CLEARING: SEE SML DWG'S AND GEOTECHNICAL REPORT FOR EXTENT OF SITE DEMOLITION. THIS WORK SHALL INCLUDE REMOVAL OF ALL EXISTING PAVEMENTS, CURBS (U.O.N), LIGHT POLES (INCLUDING FTG'S.) VEGETATION (INCLUDING STUMPS), UTILITIES (NOT OTHERWISE REUSED) OR OTHER SUBSTRUCTURES AS REQUIRED FOR NEW CONSTRUCTION.
4. SITE GRADING SHALL BE PERFORMED IN ACCORDANCE WITH THESE PLANS & SPECIFICATIONS AND THE RECOMMENDATIONS SET FORTH IN THE SOILS REPORT REFERENCED IN THIS PLAN SET. THE CONTRACTOR SHALL BE RESPONSIBLE FOR REMOVING & REPLACING ALL SOFT, YIELDING OR UNSUITABLE MATERIALS AND REPLACING WITH SUITABLE MATERIALS AS SPECIFIED IN THE SOILS REPORT. BUILDING PAD TO BE CONSTRUCTED WITH 18" OF NON-EXPANSIVE ENGINEERED FILL OR 12" OF LIME TREATED SUBGRADE IN ACCORDANCE WITH THE SOILS REPORT. ALL EXCAVATED OR FILLED AREAS SHALL BE COMPACTED AND MOISTURE CONDITIONED AS SPECIFIED IN THE SOILS REPORT. CONTRACTOR SHALL SUBMIT A COMPACTION REPORT PREPARED BY A QUALIFIED SOILS ENGINEER, REGISTERED WITHIN THE STATE WHERE THE WORK IS PERFORMED, VERIFYING THAT ALL FILLED AREAS AND SUBGRADE AREAS WITHIN THE BUILDING PAD AREA AND AREAS TO BE PAVED HAVE BEEN COMPACTED IN ACCORDANCE WITH THESE PLANS AND SPECS, AND THE RECOMMENDATIONS SET FORTH IN THE SOILS REPORT.
5. THE A.L.T.A. SURVEY SHALL BE CONSIDERED A PART OF THESE PLANS. THE G.C. IS RESPONSIBLE FOR LOCATING IMPROVEMENTS PER THESE PLANS.
6. THE LOCATIONS OF UNDERGROUND FACILITIES SHOWN ON THESE PLANS ARE BASED ON FIELD SURVEYS AND LOCAL UTILITY COMPANY RECORDS. IT SHALL BE THE CONTRACTORS FULL RESPONSIBILITY TO CONTACT THE APPROPRIATE UTILITY COMPANY. NO COMPENSATION SHALL BE PAID TO THE CONTRACTOR FOR DAMAGE AND REPAIR TO THESE FACILITIES CAUSED BY HIS WORK FORCE.
7. ALL DIMENSIONS AND GRADES SHOWN ON THE PLANS SHALL BE FIELD VERIFIED BY THE CONTRACTOR PRIOR TO CONSTRUCTION. CONTRACTOR SHALL NOTIFY THE CONSTRUCTION MANAGER IF ANY DISCREPANCIES EXIST. PRIOR TO PROCEEDING WITH CONSTRUCTION, FOR NECESSARY PLAN OR GRADE CHANGES. NO EXTRA COMPENSATION SHALL BE PAID TO THE CONTRACTOR FOR WORK HAVING TO BE REDONE DUE TO DIMENSIONS OR GRADES SHOWN INCORRECTLY ON THESE PLANS IF SUCH NOTIFICATION HAS NOT BEEN GIVEN.
8. SEE CIVIL PLANS FOR ALL WORK IN STREET RIGHT OF WAY. HIGHWAY (CALTRANS), IF APPLICABLE, AND CITY ENCROACHMENT PERMITS TO BE OBTAINED AND PAID FOR BY THE GENERAL CONTRACTOR.
9. REFER TO DWG. E2 FOR SITE ELECTRICAL REQUIREMENTS AND PHOTOMETRIC PLAN.
10. ALL ON-SITE PAINTED STRIPING, LETTERS AND TRAFFIC ARROWS SHALL BE "EPOXY" TYPE "TRAFFIC" PAINT.
11. PRIOR TO SUBMITTING BID AND INSTALLATION OF WATER SERVICES G.C. SHALL CONFIRM AVAILABLE RESIDUAL AND STATIC WATER PRESSURES AT STREET POINT OF CONNECTION. G.C. SHALL BE RESPONSIBLE FOR NOTIFYING PROJECT ARCHITECT/ENGINEER OF AVAILABLE PRESSURE.

KEY NOTES

1. A.C. PAVING AND BASE, PER PROJECT GEOTECHNICAL REPORT. SEE DETAIL 7 SHT. C2.1. APPLY LIQUID ASPHALT AT ALL JOINTS BETWEEN CONCRETE AND ASPHALT.
2. CONSTRUCT 6" THK. P.C.C. PAVEMENT (W/'LAMP BLACK' @ 8 LBS/CY) W/ #4 @ 18"O.C. EW (CONST. JTS. 12'-0" O.C. APPLY LIQUID ASPHALT AT ALL JOINTS BETWEEN CONCRETE AND ASPHALT. PROVIDE EXPANSION JOINTS @ 20' O.C. MAX. (MAX SLOPE 1%).
3. CONSTRUCT DUMPSTER ENCLOSURE ON 6" THK. P.C.C. PAD (W/LAMP BLACK' @ 8 LBS/CY) W/#4 @ 12" O.C. EACH WAY. SEE DETAIL 16 SHT. C2.2.
4. PAINT 4" WIDE SOLID PARKING STALL STRIPES (WHITE).
5. INSTALL 1200 GAL. EXTERIOR GREASE INTERCEPTOR PER DETAIL 18 SHT. C2.1. SEE UTILITY PLAN FOR LOCATIONS OF SEWER LATERALS, CLEAN OUTS AND POINT OF CONNECTION TO MAIN.
6. CONSTRUCT 6" P.C.C. CURB PER DETAIL 1 SHT. C2.1.
7. NOT USED.
8. CONSTRUCT P.C.C. CURB EDGE SIDEWALK PER DETAIL 3 SHT. C2.1. 4.5% SLOPE MAX., 1.5% MAX. CROSS SLOPE IN DIRECTION OF TRAVEL.
9. LANDSCAPE SETBACK.
10. CONSTRUCT P.C.C. SIDEWALK PER DETAIL 1 SHT. C2.1. 1.5% MAX. CROSS SLOPE, 4.5% SLOPE MAX., IN DIRECTION OF TRAVEL.
11. 6" THK. CONC. PAD AT ENDS OF LANDSCAPING AREAS WHERE SHOWN W/#3 @12" O.C. EACH WAY.
12. TOP OF CURB DOWN TO SIDEWALK. SEE DETAIL 14 SHT. C2.1.
13. NEW RAIN WATER LEADERS (TOTAL-3). DISCHARGE THRU CURB FACE AT SIDEWALK. 2
14. (E) OVERHEAD ELECTRICAL LINES.
15. EXISTING SIGN TO BE REMOVED.
16. MAXIMUM BUILDING SETBACK.
17. INSTALL BOLLARD PER DETAIL 12 SHT. C2.1. (TYP. OF 3)
18. FINISHED BUILDING SLAB ELEVATION TO MATCH CONC. SIDEWALK LVL.
19. INSTALL CONCRETE WHEEL STOP PER DETAIL 7 SHT. C2.2 (TYP. ADJACENT TO BUILDING).
20. (N)LANDSCAPE AREA. REFER TO LANDSCAPE DRAWINGS.
21. 180 WATT LOW PRESSURE SODIUM YARDLIGHT, REFER TO DWG. E2 FOR TYPE. LIGHT FIXTURES AND POLES SUPPLIED BY OWNER, INSTALLED BY GC. REFER TO DETAIL 4 SHT. C2.3.
22. (2) CLASS III BIKE RACKS PER DETAIL 9 SHT. C2.1.
23. PROVIDE 2X REDWOOD HEADER BOARD ALONG PROPERTY LINE WHERE (N)LANDSCAPING ABUTTS EXISTING. COORDINATE WITH NEXT-DOOR TENANT FOR LOCATION OF CURB.
24. INSTALL KFC FURNISHED CONCRETE TRASH RECEPTACLE (TYP. OF 4). PROVIDE CONCRETE BASE IN LANDSCAPE AREAS.
25. (N) CONCRETE SWALE. SEE SHT. C3 FOR DETAILS.
26. NOT USED.
27. DISABLED ACCESS PATH OF TRAVEL (4.5% MAX SLOPE, 1.5% MAX CROSS SLOPE IN DIRECTION OF TRAVEL) 1
28. ACCESSIBLE PARKING SIGN MOUNTED PER DETAIL 8 SHT. C2.2. VAN ACCESSIBLE SIGN WHERE NOTED.
29. TOW AWAY SIGN PER DETAIL 12 SHT. C2.2.
30. PAINT 4" WIDE SOLID WHITE STRIPES @36" O.C. WHERE SHOWN.
31. HC ACCESSIBLE PARKING STALL PER DETAIL 2 SHT. C2.2. 2% MAX. PAVEMENT SLOPE WITHIN HC ACCESSIBLE PARKING, LOADING AND LOADING ACCESS AISLE AREA. REFER TO GRADING PLAN.
32. INTERNATIONAL SYMBOL OF ACCESSIBILITY PAINTED ON PAVEMENT OF PARKING STALL PER DETAIL 9 SHT. C2.2.(WHITE ON BLUE BACKGROUND)
33. PAVEMENT SURFACE AT ALL BLD'G ENTRY/EXT DOORS SHALL NOT EXCEED 1.5% SLOPE FOR 5' IN DIRECTION OF DOOR SWING AND 2' TO STRIKE SIDE OF DOOR.
34. (E) 15" REDWOOD.
35. (E) 20" REDWOOD.
36. PAINT 24" HIGH LETTERS (WHITE) @24" OC.
37. (E) 30" REDWOOD.
38. PAINT TRAFFIC ARROWS (WHITE) PER DETAIL 5 SHT. C2.2. USE 'EPOXY TYPE' TRAFFIC PAINT.
39. (E) 40" TREE.
40. (E) 15" TREE.
41. (E) 18" TREE.
42. (E) WATER METER & SERVICE. RELOCATE AS REQUIRED PER CITY STANDARDS.
43. NEW MONUMENT SIGN.
44. PROVIDE 5'-0" WIDE ACCESSIBLE PATH AT PLANTER, DIM'S. AND LOCATION T.B.D.
45. DOUBLE FACED ILLUMINATED DIRECTIONAL SIGN (SIGN FACE AS NOTED) BY SIGN SUPPLIER. ROUGH ELECTRICAL BY GC.
46. 3'-4" SQUARE FIXED EXTERIOR TABLE WITH 3 FIXED SEATS + 1 HANDICAPPED. SEE DETAIL 4/C2.3
47. TEL. TERMINATION BRD. PER UTILITY CO. REQ., REFER TO ELECT. DWG'S.
48. PROVIDE ELECTRICAL SERVICE AS REQ'D FOR PROJECT. CONSTRUCT ELECTRICAL TRANSFORMER PAD (106"x90" VERIFY), U.G. CONDUITS, SPLICE BOXES PER UTILITY REQT'S. WHERE REQ'D BY UTILITY CO. PROVIDE PRIMARY/SECONDARY CONDUCTORS. VERIFY LOCATION OF ALL ELECTRICAL COMPANY REQ'D FACILITIES WITH UTILITY CO. PRIOR TO START OF WORK.
49. ELECTRICAL MAIN SWITCHBOARD. SEE ELECTRICAL DRAWINGS.
50. PROVIDE GAS SERVICE AS REQ'D FOR PROJECT PER UTILITY CO. REQT'S. VERIFY LOCATION OF GAS FACILITIES AND ON-SITE LATERALS WITH UTILITY CO. PRIOR TO START OF WORK.
51. COTG FOR BLD'G SEWER. SEE PLUMBING & SITE UTILITY DWG'S.
52. INSTALL DOMESTIC WATER SERVICE AND METER. BACKFLOW PER SITE UTILITY DWG. AND CITY STANDARDS. SEE SITE PLAN NOTE #11 ON THIS SHEET.
53. INSTALL IRRIGATION WATER SERVICE, METER AND BACKFLOW PER SITE UTILITY PLAN, IRRIGATION PLAN AND CITY STANDARDS. SEE SITE PLAN NOTE #11 THIS SHEET.
54. (N) CONCRETE TREE WELLS PER CITY STANDARDS.
55. WATER SHUT OFF VALVE IN CONCRETE YARD BOX. REFER TO UTIL. PLAN FOR WATER SERVICE.
56. LINE OF EXISTING BUILDING TO BE DEMOLISHED. SEE DEMO PLAN, SHT. C7.
57. (E) BUS SHELTER TO BE RELOCATED.
58. G.C. TO PROVIDE & INSTALL TRUNCATED DOMES PER LOCAL, CA & T-24/ ADA REQUIREMENTS. SEE DETAIL 10 SHT. C2.2
59. NEW POSITION OF BUS SHELTER.
60. (E) ABANDONED 4" SANITARY SEWER LINE.
61. (E) SANITARY SEWER LINE TO BE ABANDONED.
62. (N) SANITARY SEWER LINE CONNECTION.
63. NOT USED.
64. ELECTRICAL PULL BOX.
65. "DO NOT ENTER - NO EXIT SIGN" SIGN.
66. (E) NOT USED.
67. (E) STREET LIGHT.
68. (E) FIRE HYDRANT.
69. SANITARY SEWER CLEAN OUT & CONNECTION.
70. 12" WHITE PAINTED LETTERS CENTERED INSIDE FRONT EDGE OF PARKING SPACE.

FOR SET BACKS ONLY
CITY OF SAN JOSE
BUILDING DIVISION
B.P. #_____
DATE_____

Vincent+Murphy Incorporated
637 Fifth Avenue
San Rafael, Ca. 94901
(415) 451-2500
FAX 451-2595

LICENSED ARCHITECT
HUGH EDWARD MURPHY
No. C17928
REN. 10/31/07
STATE OF CALIFORNIA

JOB NUMBER
H0510

SUBMITTALS

03/24/06	BLD'G PC#1 SUBMITTAL

REVISIONS

1	04/28/06	P.C. RESPONSE #1
2	06/26/06	P.C. RESPONSE #2

CONTRACT DATE:
BUILDING TYPE: KA60-Y04
PLAN VERSION: JAN 05 D
SITE NUMBER:
STORE NUMBER:

KFC / A&W

3144 S. BASCOM AVENUE
SAN JOSE, CA 95124-2022

KA60-Y04

SITE PLAN

C2.0

W:\Data\harman\20051\H0510_san jose_bascom\03_cd_current\005_KA_Y04-C2_0.dwg modified by Dhcmingan at Jun 26, 2006 - 3:26pm

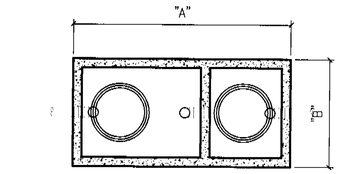

TOP VIEW

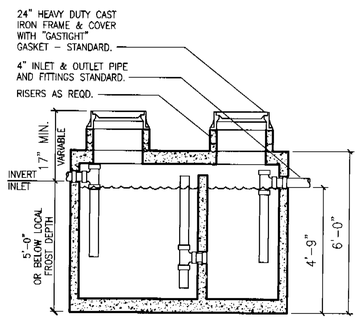

SECTION

G.T. SIZE	DIM. "A"	DIM. "B"
1500 GALLON	8'-6"	5'-9"

OR SHALL INSTALL GREASE INTERCEPTOR, (G.I.) AS APPROVED BY LOCAL WASTEWATER JURISDICTION INSTALLATION SHALL INCLUDE VENT, SAMPLING PORT/ MANHOLE, REINF. CONCRETE TRAFFIC LID, ETC. AS REQUIRED PER WASTEWATER DEPARTMENT STANDARDS. G.I. SHALL BE DESIGNED FOR H20 VEHICLE LOADS.

EXTERIOR GREASE INTERCEPTOR N.T.S. | 18

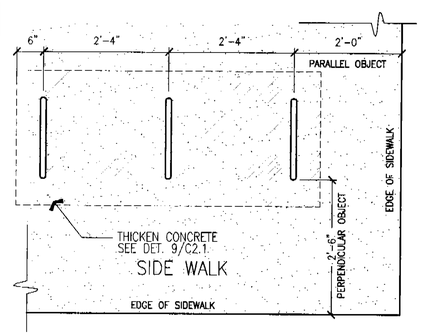

BIKE RACK PLACEMENT 3/4"=1'-0" | 13

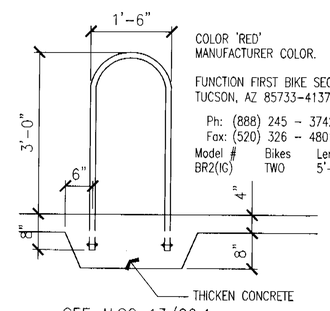

COLOR 'RED'
MANUFACTURER COLOR.

FUNCTION FIRST BIKE SECURITY
TUCSON, AZ 85733-4137

Ph: (888) 245 - 3742
Fax: (520) 326 - 4801

Model #	Bikes	Length
BR2(IC)	TWO	5'-0"

SEE ALSO 13/C2.1

BIKE RACK 3/4"=1'-0" | 9

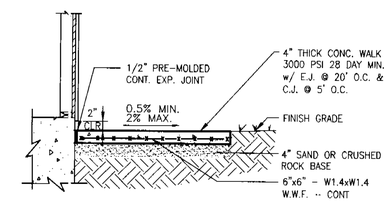

SIDEWALK N.T.S. | 5

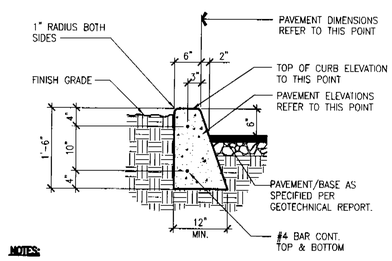

NOTES:

1. REFER TO PROJECT GEOTECHNICAL REPORT FOR A/C PAVEMENT, BASE AND SUBGRADE REQUIREMENTS
2. ALL CURBING TO BE 3000 P.S.I. @ 28 DAY P.C.C. TYP.
3. PROVIDE EXPANSION JOINTS @ 20'-0" O.C.

CONCRETE CURB 3/4"=1'-0" | 1

Vincent+Murphy Incorporated

637 Fifth Avenue
San Rafael, Ca. 94901
(415) 451-2500
FAX 451-2595

LICENSED ARCHITECT EDWARD MURPHY No. C17928 EXP. 10/31/07 STATE OF CALIFORNIA

JOB NUMBER
H0510

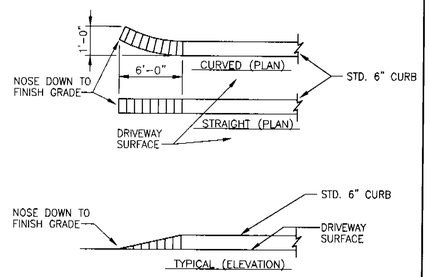

STANDARD CURB NOSING N.T.S. | 14

NOT USED N.T.S. | 10

NOT USED NTS | 6

NOTES:

1. REFER TO PROJECT GEOTECHNICAL REPORT FOR A/C PAVEMENT, BASE AND SUBGRADE REQUIREMENTS
2. ALL CURBING TO BE 3000 P.S.I. @ 28 DAY P.C.C. TYP.
3. PROVIDE EXPANSION JOINTS @ 20'-0" O.C.

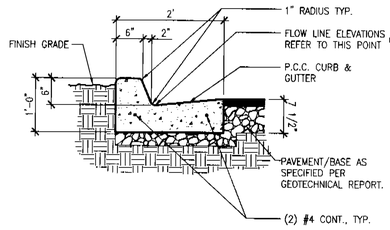

CONCRETE CURB & GUTTER 3/4"=1'-0" | 2

SUBMITTALS

03/24/06	BLD'G PC#1 SUBMITTAL

REVISIONS

CONTRACT DATE:
BUILDING TYPE: KA60-Y04
PLAN VERSION: JAN 05 D
SITE NUMBER:
STORE NUMBER:

KFC / A&W

3144 S. BASCOM AVENUE
SAN JOSE, CA 95124-2022

ALL AMERICAN FOODS

KA60-Y04

SITE DETAILS

C2.1

Title:	Date:	Dwg. No.
CUSTOM PRECAST CONCRETE DROP INLETS	MARCH,1997	D1
	Rev. SEP,1997	Page No. 1-1

Santa Rosa Cast Products Company 471 WEST COLLEGE AVE. SANTA ROSA, CA 95401 (707)546-5016

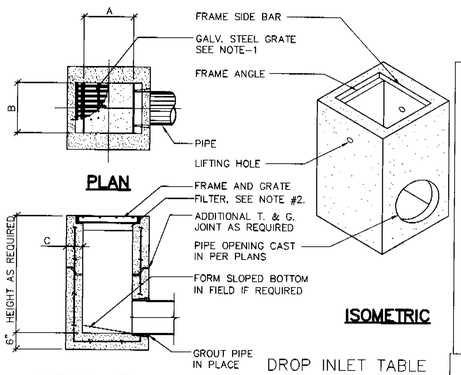

NOTES:

1. "Fossil Filter" insert body shall be one piece molded hunter green or black High Density Polyethylene (HDPE), or polypropylene resistant thermoplastic which meets or exceeds PS 15-69.
2. Air vents, comprised of either stainless steel, Type 304, or fiberglass screen shall be cast into basin and filter sizing.
3. Filter medium shall be "Fossil Rock" or equal and maintained in accordance with manufacturer recommendations.
4. Installation Manufacturer's recommendation for maintenance program.

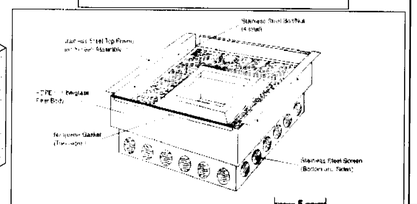

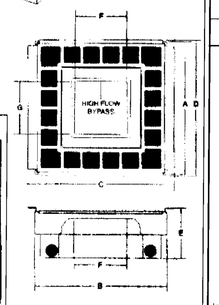

DROP INLET TABLE

MODEL	A		B		C	
	IN	MM	IN	MM	IN	MM
EK	12	305	12	305	4	102
BK	16	406	16	406	5	127
CK	18	457	18	457	4	102
1K	16	406	24	610	5	127
2K	24	610	24	610	5	127
3K	24	610	30	762	5	127
5K	30	762	30	762	6	152
1L	24	610	36	914	6	152
1M	36	914	36	914	6	152
3L	24	610	48	1219	6	152
3M	36	914	48	1219	6	152
1R	48	1219	48	1219	6	152

DIMENSION CHART

MODEL NO	A	B	C	D	E	F	G
FF-1818	18"	18"	18.5"	18.5"	8"	8"	8"
FF-1818	18"	18"	17.5"	17.5"	8"	8"	8"
FF-1824	24"	18"	17.5"	23.5"	8.5"	8"	13"
FF-1824	24"	18"	18.5"	23.5"	8.5"	8"	13"
FF-2424	24"	24"	23.5"	23.5"	8.5"	13"	13"
FF-2436	36"	24"	29"	35.5"	8.5"	13"	18"
FF-2436	36"	24"	29"	35.5"	8.5"	13"	25"
FF-2436S	36"	30"	29"	35.5"	8.5"	20"	13"
FF-2448	48"	24"	29"	47.5"	8.5"	13"	30"
FF-3636	36"	36"	34"	35.5"	8.5"	18"	18"
FF-3636	36"	36"	34"	35.5"	8.5"	25"	25"
FF-3648	48"	36"	34"	47.5"	8.5"	18"	30"
FF-4848	48"	48"	34"	47.5"	8.5"	30"	30"

U.S. Patent Number 5,710,574

FOSSIL FILTER™ DROP IN™ CATCH BASIN INSERT

Kristar Enterprises, Inc., Santa Rosa, CA (707) 579-8819

CATCH BASIN N.T.S. | 16

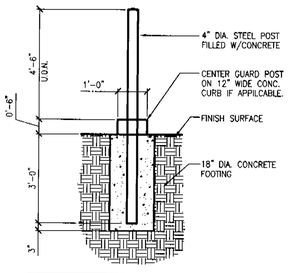

SEE ALSO DETAIL 12/C2.1 FOR BOLLARD AT CURB.

BOLLARD N.T.S. | 11

1. ___" ASPHALT SURFACE COURSE
2. ___" ASPHALT BINDER COURSE
3. ___" AGGREGATE BASE
4. SUBGRADE COMPACTION
5. PROOF ROLLING
6. TACK COAT

* REFER TO GEOTECHNICAL REPORT FOR PAVEMENT THICKNESSES AND COMPLETE PAVEMENT DESCRIPTION

TYPICAL PAVEMENT DETAIL N.T.S. | 7

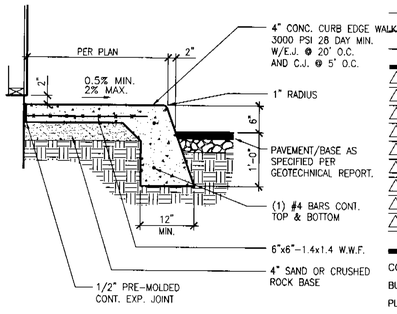

CURB EDGE SIDEWALK N.T.S. | 3

SEE ALSO DETAIL 11/C2.1

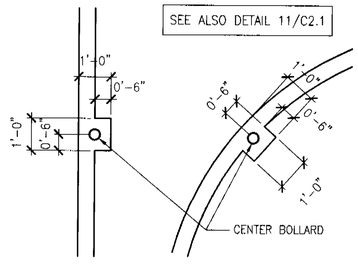

BOLLARD AT CURB (PLAN) N.T.S. | 12

NOT USED N.T.S. | 8

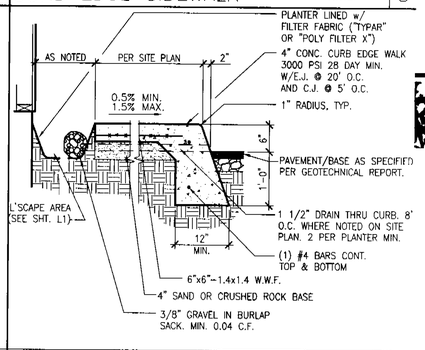

PLANTER & CURB S/W 3/4"=1'-0" | 4

DRAWING NAME

W:\Data\bormon\2005\H0510_san jose_bascom\03_cd_current\007_KA_104-C2.1.dwg modified by Dhanrajam at Jun 26, 2006 - 3:26pm

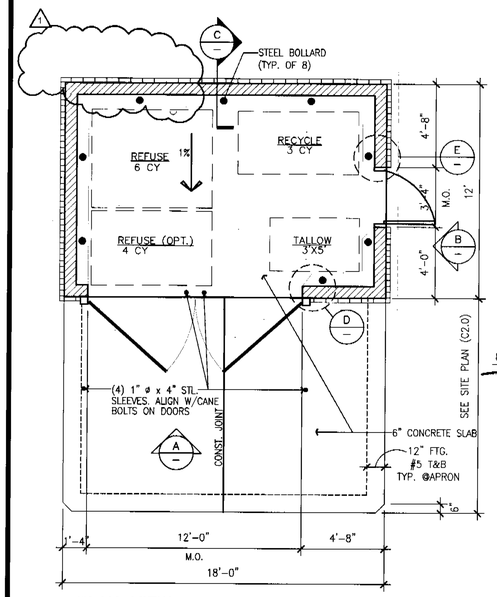

PLAN VIEW

1/4"=1'-0"

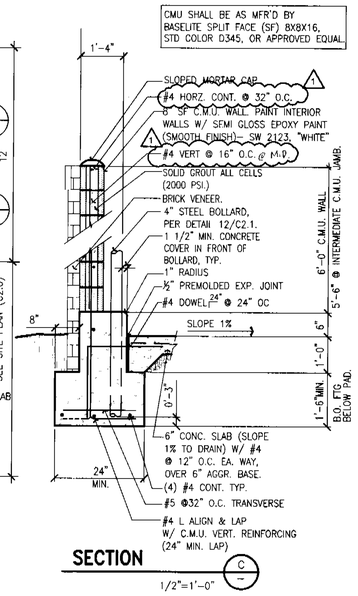

SECTION

1/2"=1'-0"

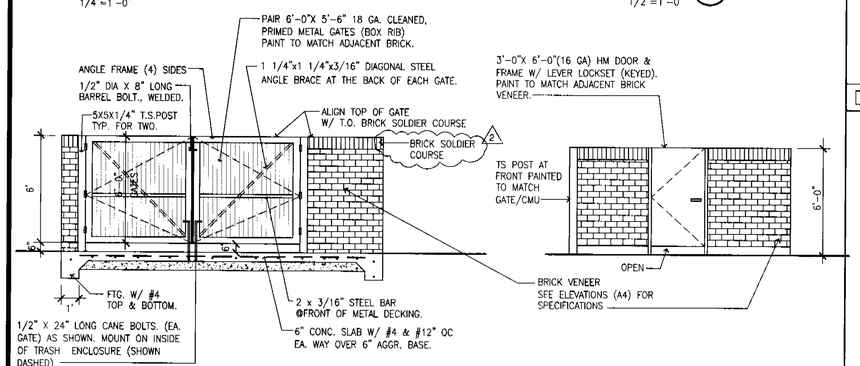

FRONT ELEVATION

(REAR SIMILAR) 1/4"=1'-0"

SIDE ELEVATION

1/4"=1'-0"

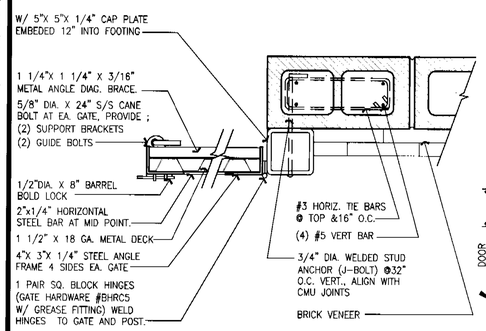

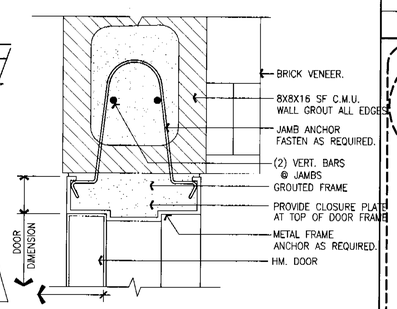

JAMB DETAIL AT ACCESS DOOR

3"=1'-0"

TRASH ENCLOSURE DETAILS — AS NOTED | 16

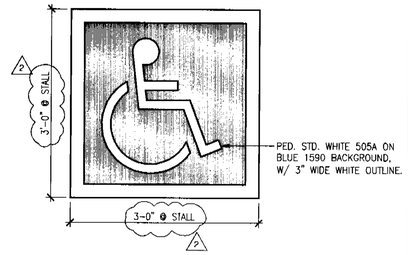

PARKING ACCESSIBILITY SYMBOL 3/4"=1'-0" | 9

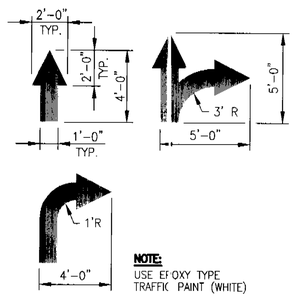

TRAFFIC ARROWS 1/4"=1'-0" | 5

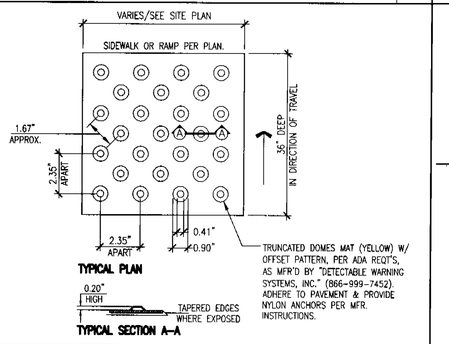

DETAIL TRUNCATED DOMES 3/4"=1'-0" | 10

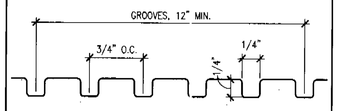

GROOVING DETAIL N.T.S. | 6

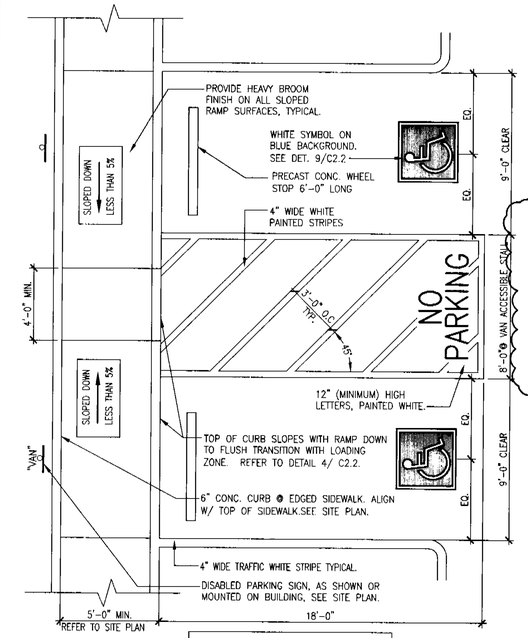

DISABLED ACCESS PARKING 1/4"=1'-0" | 2

NOT USED | 11

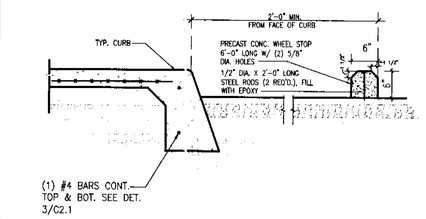

WHEEL STOP 3/4"=1'-0" | 7

NOT USED - | 3

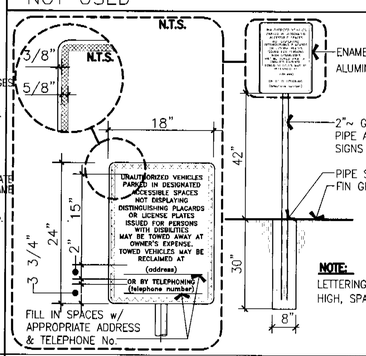

TOW AWAY SIGN 1/2"=1'-0" | 12

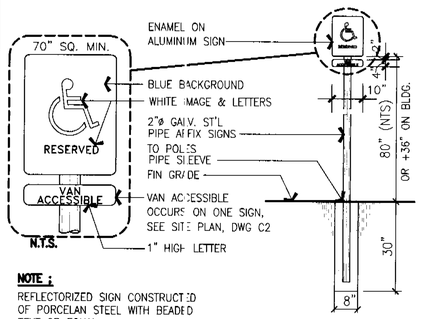

ACCESSIBLE PARKING SIGN 1/2"=1'-0" | 8

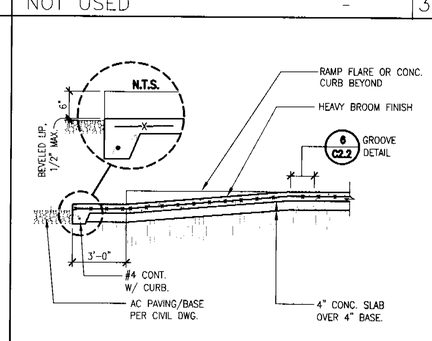

RAMP SECTION 1/4"=1'-0" | 4

Vincent+Murphy Incorporated
637 Fifth Avenue
San Rafael, Ca. 94901
(415) 451-2500
FAX 451-2595
LICENSED ARCHITECT HUGH EDWARD MURPHY No. C17928 REN. 10/31/07 STATE OF CALIFORNIA

JOB NUMBER H0510

SUBMITTALS

03/24/06	BLD'G PC#1 SUBMITTAL

REVISIONS

1 04/28/06	P.C. RESPONSE #1
2 06/23/06	P.C. RESPONSE #2

CONTRACT DATE:
BUILDING TYPE: KA60-Y04
PLAN VERSION: JAN 05 D
SITE NUMBER:
STORE NUMBER:

KFC / A&W
3144 S. BASCOM AVENUE
SAN JOSE, CA. 95124-2022

All American Food

KA60-Y04

SITE DETAILS

C2.2

W:\Data\vsmon\2005\H0510_san jose_bascom\03_cd_current\008_KA_Y04-C2.2.dwg modified by Dhonnigan at Jun 26, 2006 - 3:26pm

NOT USED N.T.S. 10

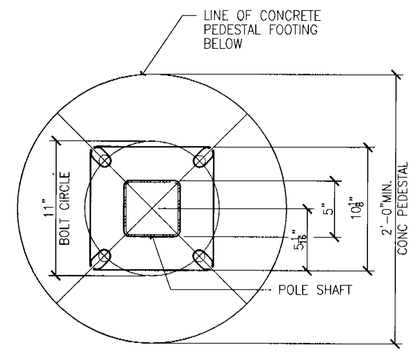

SOFFIT CLEARANCE SIGN 3/8" = 1'-0" 11

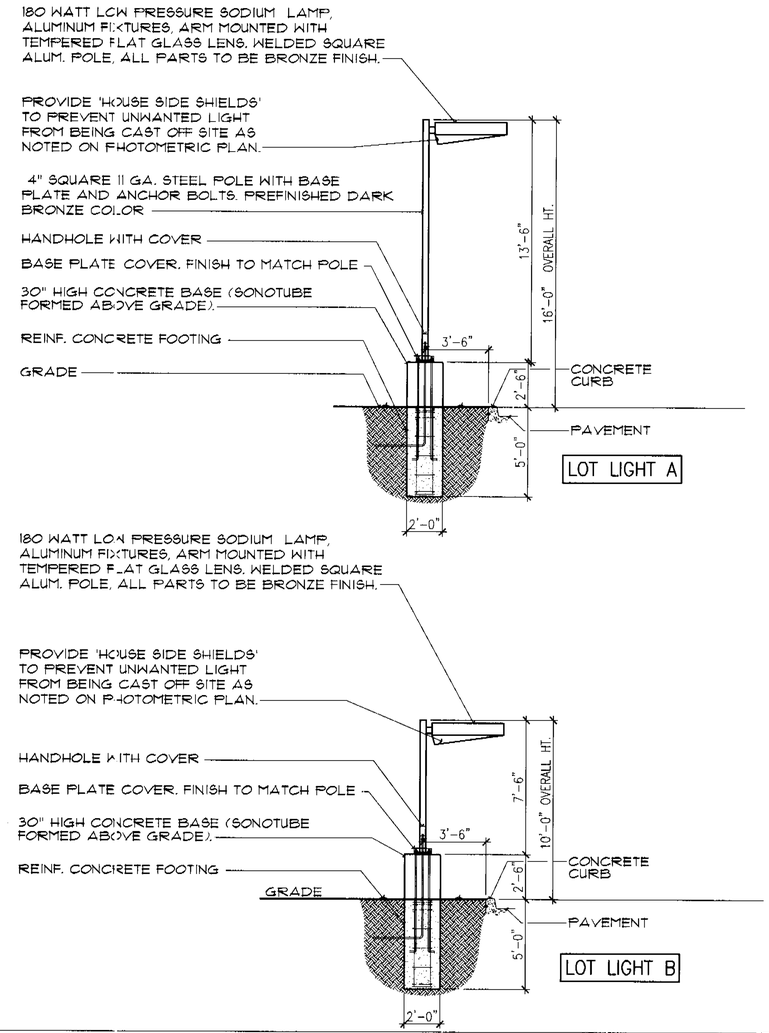

YARD LIGHT DETAIL 1/4" = 1'-0" 3

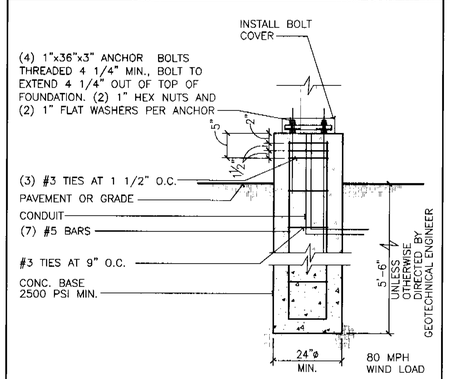

LIGHT POLE FOUNDATION N.T.S. 12

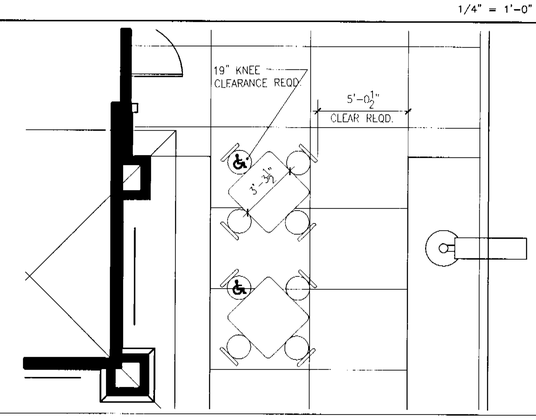

OUTDOOR SEATING DETAILS 3/8" = 1'-0" 4

Vincent+Murphy Incorporated

637 Fifth Avenue
San Rafael, Ca. 94901
(415) 451-2500
FAX 451-2595

LICENSED ARCHITECT
HUGH EDWARD MURPHY
No. C17928
REN. 10/31/07
STATE OF CALIFORNIA

JOB NUMBER
H0510

SUBMITTALS

03/24/06	BLD'G PC#1 SUBMITTAL

REVISIONS

CONTRACT DATE:
BUILDING TYPE: KA60-Y04
PLAN VERSION: JAN 05 D
SITE NUMBER:
STORE NUMBER:

KFC / A&W

3144 S. BASCOM AVENUE
SAN JOSE, CA 95124-2022

KA60-Y04

SITE DETAILS

C2.3

W:\Data\kvarnich\2005\H0510_san jose_bascom\03_cd_current\009_KA_Y04-C2.3.dwg modified by Dhamnigan at Jun 26, 2006 - 3:26pm

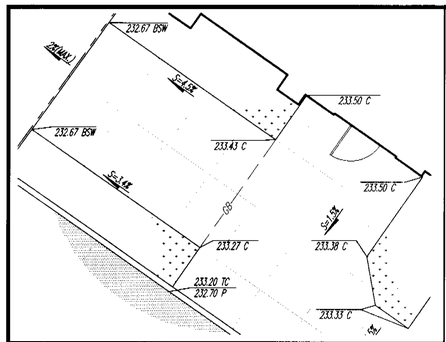

17 ENLARGED GRADING PLAN

SCALE: 1" = 6'

1. ALL GRADING IS SUBJECT TO OBSERVATION BY THE CITY. PERMITTEE OR REPRESENTATIVE SHALL NOTIFYTHE CITY OF SAN JOSE AT (408) 535-3555 AT LEAST 48 HOURS BEFORE START OF ANY GRADING.
   THE PROJECT INSPECTOR IS _____ VOICEMAIL NO. (408)998-_____
2. APPROVAL OF THIS PLAN APPLIES ONLY TO THE EXCAVATION, PLACEMENT, AND COMPACTION OF NATURAL EARTH MATERIALS. THIS APPROVAL DOES NOT CONFER ANY RIGHTS OF ENTRY TO EITHER PUBLIC PROPERTY OR THE PRIVATE PROPERTY OF OTHERS. APPROVAL OF THIS PLAN ALSO DOES NOT CONSTITUTE APPROVAL OF ANY IMPROVEMENTS. PROPOSED IMPROVEMENTS ARE SUBJECT TO REVIEW AND APPROVAL BY THE RESPONSIBLE AUTHORITIES AND ALL OTHER REQUIRED PERMITS SHALL BE OBTAINED.
3. IT SHALL BE THE RESPONSIBILITY OF THE PERMITTEE OR AGENT TO IDENTIFY, LOCATE AND PROTECT ALL UNDERGROUND FACILITIES.
4. THE PERMITTEE OR AGENT SHALL MAINTAIN THE STREETS, SIDEWALKS AND ALL OTHER PUBLIC RIGHTS-OF-WAY IN A CLEAN, SAFE AND USABLE CONDITION. ALL SPILLS OF SOIL, ROCK OR CONSTRUCTION DEBRIS SHALL BE REMOVED FROM THE PUBLICLY OWNED PROPERTY DURING CONSTRUCTION AND UPON COMPLETION OF THE PROJECT. ALL ADJACENT PROPERTY, PRIVATE OR PUBLIC SHALL BE MAINTAINED IN A CLEAN, SAFE AND USABLE CONDITION.
5. ALL GRADING SHALL BE PERFORMED IN SUCH A MANNER AS TO COMPLY WITH THE STANDARDS ESTABLISHED BY THE AIR QUALITY MANAGEMENT DISTRICT FOR AIRBORNE PARTICULATES.
6. THIS PROJECT HAS BEEN DESIGNED TO COMPLY WITH THE FLOOD HAZARD AREA REGULATIONS AS STATED IN CHAPTER 17.08 OF THE SAN JOSE MUNICIPAL CODE.
7. ALL KNOWN WELL LOCATIONS ON THE SITE HAVE BEEN INCLUDED AND SUCH WELLS SHALL BE MAINTAINED OR ABANDONED ACCORDING TO CURRENT REGULATIONS ADMINISTERED BY THE SANTA CLARA VALLEY WATER DISTRICT. CALL (408) 265-2600 EXTENSION 2660 TO ARRANGE FOR DISTRICT OBSERVATION OF ALL WELL ABANDONMENTS.
8. IN THE EVENT THAT HUMAN REMAINS AND/OR CULTURAL MATERIALS ARE FOUND, ALL PROJECT-RELATED CONSTRUCTION SHOULD CEASE WITHIN A 100-FOOT RADIUS. THE CONTRACTOR SHALL, PURSUANT TO SECTION 7050.5 OF THE HEALTH AND SAFETY CODE, AND SECTION 5097.94 OF THE PUBLIC RESOURCES CODE OF THE STATE OF CALIFORNIA, NOTIFY THE SANTA CLARA COUNTY CORONER IMMEDIATELY.
9. THIS PLAN DOES NOT APPROVE THE REMOVAL OF TREES. APPROPRIATE TREE REMOVAL PERMITS AND METHODS OF TREE PRESERVATION SHOULD BE OBTAINED FROM THE CITY PLANNING DEPARTMENT AND THE CITY ARBORIST.
10. A. THE CIVIL ENGINEER FOR THIS PROJECT IS:
    SKW & ASSOCIATES 2237 SCENIC DRIVE MODESTO,CA 95355
    B. THIS ROUGH GRADING PLAN HAS BEEN PREPARED BASED ON THE RECOMMENDATIONS OF THE REFERENCED PROJECT GEOTECHNICAL REPORT.
11. A. THE SOIL ENGINEER FOR THIS PROJECT IS:
    NEIL O. ANDERSON & ASSOCATES 800 N. MARKET BLVD, SUIT 5 SACRAMENTO, 95834
    B. THE GEOTECHNICAL REPORT FOR THIS PROJECT IS: SFG-0004
    C. ALL GRADING WORK SHALL CONFORM TO THE RECOMMENDATIONS OF THE PROJECT GEOTECHNICAL REPORT AND/OR THE PROJECT SOIL ENGINEER.
    D. ALL GRADING WORK SHALL BE OBSERVED AND APPROVED BY THE SOIL ENGINEER. THE SOIL ENGINEER SHALL BE NOTIFIED AT LEAST 48 HOURS BEFORE BEGINNING ANY GRADING. UNOBSERVED AND/OR UNAPPROVED GRADING WORK SHALL BE REMOVED AND REPLACED UNDER OBSERVATION.
12. A POST CONSTRUCTION "FINAL" REPORT IS REQUIRED BY THE DIRECTOR OF PUBLIC WORKS FROM A CIVIL ENGINEER RETAINED BY THE OWNER TO OBSERVE THE CONSTRUCTION STATING:
    A. "THAT THE CONSTRUCTION CONFORMS TO THE LINES AND GRADES ON THE APPROVED PLANS;" OR
    B. "THAT ALL SIGNIFICANT CHANGES WERE REVIEWED AND APPROVED IN ADVANCE BY THE DEPARTMENT OF PUBLIC WORKS" AND THE CIVIL ENGINEER SHALL SUBMIT A "RECORD DRAWING" PLAN.
13. A POST CONSTRUCTION "FINAL" REPORT IS REQUIRED BY THE DIRECTOR OF PUBLIC WORKS FROM A SOIL ENGINEER, AND ALSO FROM AN ENGINEERING GEOLOGIST IF THE PROJECT IS IN A GEOLOGIC HAZARD ZONE, STATING:
    A. "THAT THE ANTICIPATED CONDITIONS AND MATERIALS AND ACTUAL SITE CONDITIONS AND MATERIALS WERE COMPATIBLE," AND SUPPLY SUPPORTING DATA; OR
    B. "THAT THE DESIGN WAS MODIFIED TO MEET THE NEW CONDITIONS AND WAS REVIEWED AND APPROVED IN ADVANCE BY THE DEPARTMENT OF PUBLIC WORKS," AND PROVIDE SUPPORTING DATA FOR THESE STATEMENTS.
14. ACCORDING TO THE CITY'S WASTE WATER ORDINANCE, THE USE OF POTABLE (PIPED OR HYDRANT) WATER FOR BUILDING OR CONSTRUCTION PURPOSES INCLUDING CONSOLIDATION OF BACKFILL OR DUST CONTROL IS PROHIBITED.
    RECLAIMED WATER IS AVAILABLE (ON A COST RECOVERY BASIS) FROM THE CITY'S ENVIRONMENTAL SERVICES DEPARTMENT, WATER POLLUTION CONTROL DIVISION LOCATED AT 700 LOS ESTEROS ROAD. FOR MORE INFORMATION, PLEASE CALL ERIC HANSEN AT (408) 363-4714.
    AN APPLICATION FOR AN EXCEPTION PERMIT TO APPROVE USE OF HYDRANT WATER CAN BE CONSIDERED IN THE PW DEVELOPMENT SERVICES OFFICE. FAX-BACK SERVICE IS PROVIDED FOR THIS PERMIT APPLICATION -- CONTACT (408) 535-7802.
15. A HAUL ROUTE PERMIT IS REQUIRED FOR ALL PROJECTS MOVING MORE THAN 10,000 C.Y. OF EARTH. THIS GRADING PERMIT IS INVALID WITHOUT THE HAUL ROUTE PERMIT.
16. GRADING WILL NOT BE ALLOWED BETWEEN OCTOBER 15TH AND APRIL 15TH OF ANY YEAR WITHOUT EROSION CONTROL PLANS AND MEASURES APPROVED BY THE DIRECTOR OF PUBLIC WORKS.
17. A POST CONSTRUCTION "AS-BUILT" SUBDRAIN PLAN IS REQUIRED BY THE DIRECTOR OF PUBLIC WORKS FROM A CIVIL OR SOILS ENGINEER RETAINED BY THE OWNER TO PROVIDE THE FINAL HORIZONTAL AND VERTICAL LOCATIONS OF SUBDRAINS INSTALLED FOR THIS PROJECT SITE.

20 NOT USED

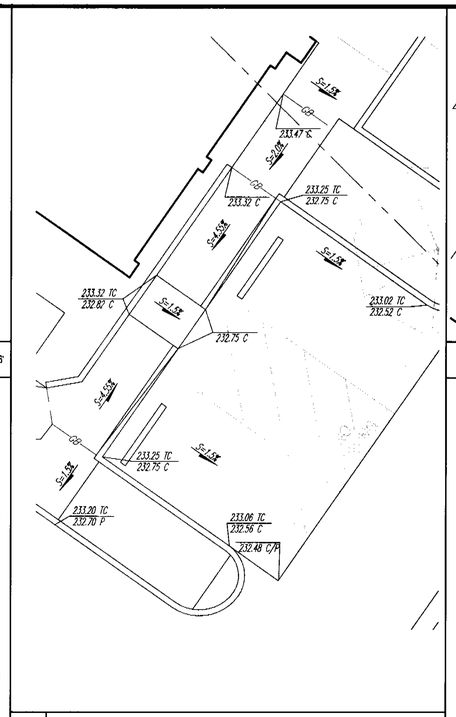

14 ENLARGED GRADING PLAN

SCALE: 1" = 6'

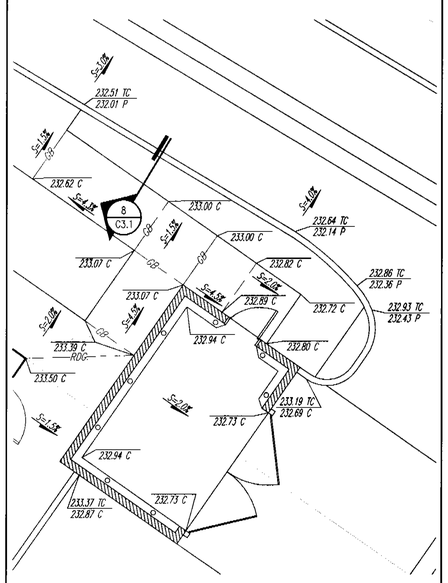

16 ENLARGED GRADING PLAN

SCALE: 1" = 6'

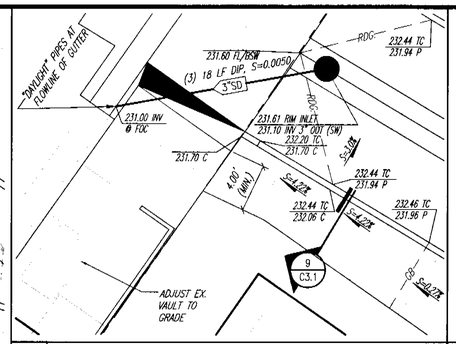

9 ENLARGED GRADING PLAN

SCALE: 1" = 6'

SITE VOLUME TABLE - ADJUSTED

(CF = 1.10, FF =1.30)

SITE	STRATUM	SURF1	SURF2	CUT YARDS	FILL YARDS	NET YARDS	METHOD
05M01'-KFC BASCOM_SAN JOSE							
	EARTHWORK	TOPO	SUBGRADE				
				727	46	681 (C)	GRID

NOTES:

1) THE EARTH WORK QUANTITIES, LISTED ABOVE, ARE TO FINISH SUBGRADE. QUANTITIES DO NOT INCLUDE VOID SPACE CREATED BY UNDERGROUND PIPES OR CONDUITS, TOP SOIL USED FOR LANDSCAPING OR EXCESSIVE HAULOFF GENERATED BY SITE DEMOLITION OPERATIONS. THESE QUANTITIES ARE APPROXIMATE ONLY. THE CONTRACTOR SHALL VERIFY QUANTITIES PRIOR TO CONSTRUCTION.

5 EARTHWORK QUANTITIES

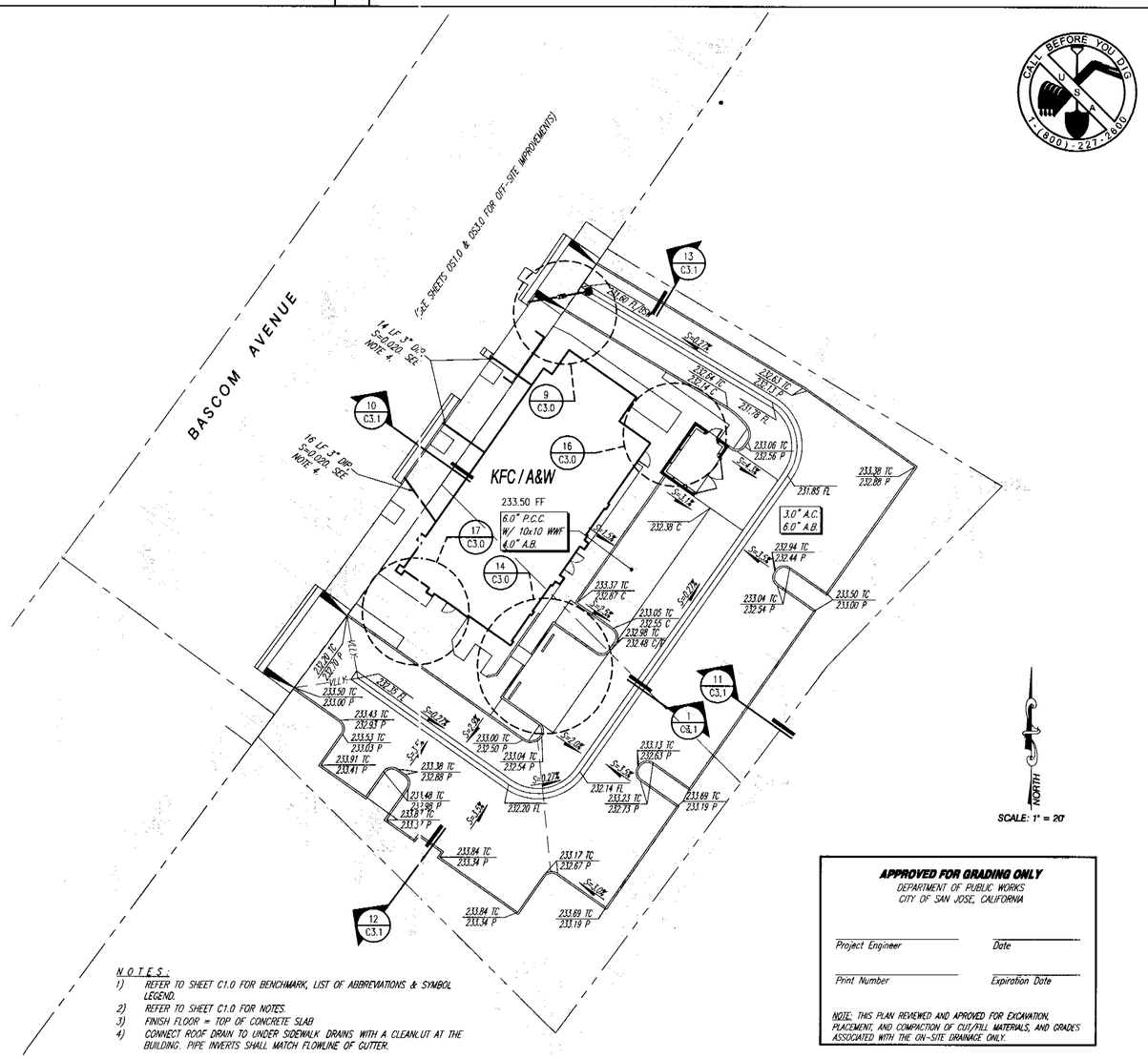

NOTES:

1) REFER TO SHEET C1.0 FOR BENCHMARK, LIST OF ABBREVIATIONS & SYMBOL LEGEND.
2) REFER TO SHEET C1.0 FOR NOTES.
3) FINISH FLOOR = TOP OF CONCRETE SLAB
4) CONNECT ROOF DRAIN TO UNDER SIDEWALK DRAINS WITH A CLEANOUT AT THE BUILDING. PIPE INVERTS SHALL MATCH FLOWLINE OF GUTTER.

APPROVED FOR GRADING ONLY
DEPARTMENT OF PUBLIC WORKS
CITY OF SAN JOSE, CALIFORNIA

Project Engineer _____ Date _____

Print Number _____ Expiration Date _____

NOTE: THIS PLAN REVIEWED AND APPROVED FOR EXCAVATION, PLACEMENT, AND COMPACTION OF CUT/FILL MATERIALS, AND GRADES ASSOCIATED WITH THE ON-SITE DRAINAGE ONLY.

Harman Management, Inc
199 First Street, Suite 212
Los Altos, CA 94022
650-941-9881

S K W & A S S O C I A T E S
ENGINEERING ARCHITECTURE SURVEYING
DEVELOPMENT CONSULTANTS
2237 SCENIC DRIVE MODESTO, CA 95355 | 1400 EXPRESSWAY, SUITE 101 A SACRAMENTO, CA. 95822
TEL : (209) 523-8323 | TEL: (916) 429-2600
FAX : (209) 523-7834 | FAX: (916) 429-2533

JOB NUMBER 05M011

REGISTERED PROFESSIONAL ENGINEER
ALLAN V. STEVENSON
No. C61758
exp. 6/30/07
CIVIL
STATE OF CALIFORNIA

GRADING AND DRAINAGE PLAN

ADDRESS:
3144 S. BASCOM AVE.
SAN JOSE, CA 95124-2022
APN# 414-14-075 & 076

RECORD DATES	
DATE	DESCRIPTION

REVISIONS		
NO.	DATE	DESCRIPTION
1	4/28/06	PC RESPONSE #1

DATE 06/22/06

BUILDING TYPE KA60Y04

PROTOTYPE ISSUE DATE JAN 05 D

STORE NAME JIM & JASMINE # 238

SHEET NUMBER C3.0

GRADING 2 OF 5

W:\Data\Harman\2005\H2510_san jose_bascom\03_cd_current\010_C3-0_GRADING.dwg modified by thornigan at Jun 26, 2006 - 4:00pm

17 NOT USED

13 NOT USED

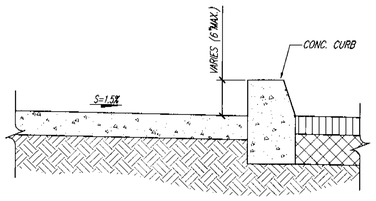

9 SECTION AT DRIVEWAY SCALE: 1" = 1'

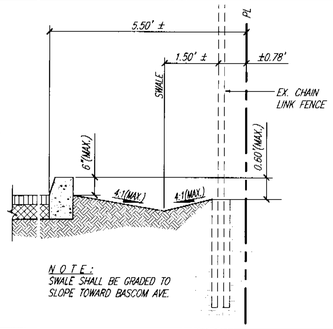

13 SECTION AT PROPERTY LINE SCALE: 1" = 2'

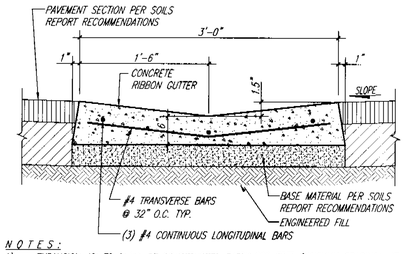

N O T E S:
1) EXPANSION JOINTS SHALL BE CONSTRUCTED EVERY 200 FEET (MAXIMUM SPACING), AT CURB RETURNS, AT CATCH BASINS AND ON BOTH SIDES OF DRIVEWAYS.
2) INSTALL (3) 24" LONG #5 DOWELS GREASED AND WRAPPED, ONE SIDE, THRU EACH EXPANSION JOINT.
3) GUTTER SHALL HAVE A FINE HAIR BROOM FINISH.

1 VALLEY GUTTER DETAIL N.T.S.

18 NOT USED

14 NOT USED

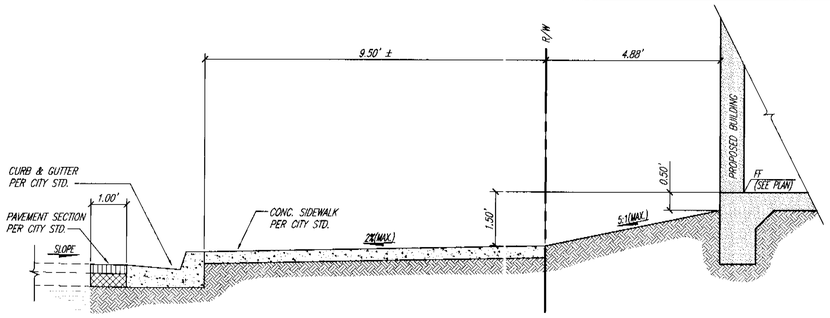

10 SECTION AT PROPERTY LINE SCALE: 1" = 2'

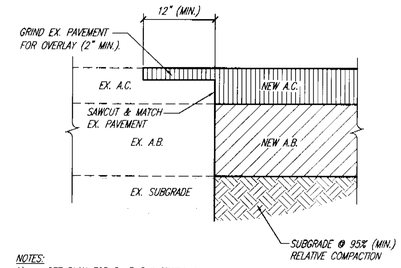

NOTES:
1) SEE PLAN FOR PAVEMENT SECTIONS.
2) SOIL COMPACTION SHALL CONFORM TO THE RECOMMENDATIONS SET FORTH IN THE GEOTECHNICAL REPORT.

2 PAVEMENT LAP JOINT N.T.S.

19 NOT USED

15 NOT USED

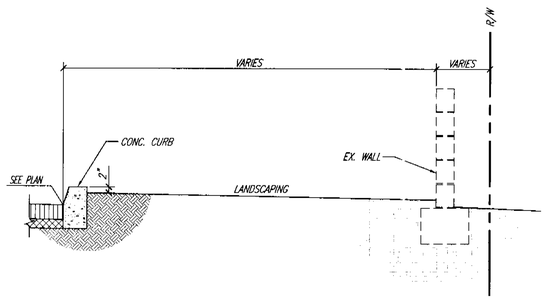

11 SECTION AT PROPERTY LINE SCALE: 1" = 2'

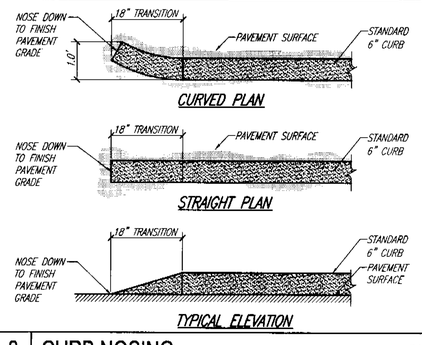

3 CURB NOSING N.T.S.

20 VALLEY GUTTER DETAIL SCALE: N.T.S.

16 NOT USED

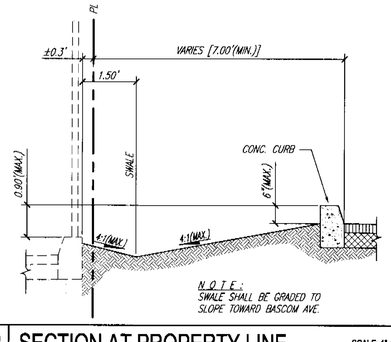

12 SECTION AT PROPERTY LINE SCALE: 1" = 2'

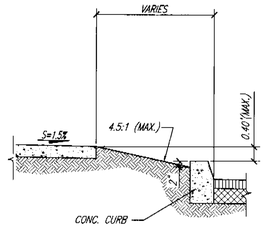

8 SECTION AT DRIVEWAY SCALE: 1" = 2'

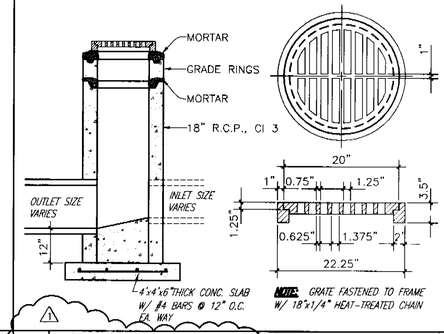

NOTE: GRATE FASTENED TO FRAME W/ 18"x1/4" HEAT-TREATED CHAIN

4 STORM DRAIN INLET N.T.S.

Harman Management, Inc.
199 First Street, Suite 212
Los Altos, CA 94022
650-941-5681

S K W ENGINEERING & ASSOCIATES ARCHITECTURE SURVEYING
6330 FREEPORT BLVD. SUITE 101
SACRAMENTO, CA. 95822
TEL: (916) 429-2500
FAX: (916) 429-2553

JOB NUMBER
06M011

REGISTERED PROFESSIONAL ENGINEER
ALLAN Y. STEVENSON
No. C61758
exp. 6/30/07
CIVIL
STATE OF CALIFORNIA

DETAILS AND SECTIONS

ADDRESS:
3144 S. BASCOM AVE.
SAN JOSE, CA 95124-2022
APN# 414-14-075 & 076

RECORD DATES

DATE	DESCRIPTION
—	—

REVISIONS

NO.	DATE	DESCRIPTION
1	4/28/06	PC RESPONSE #1

DATE
06/22/06

BUILDING TYPE
KA60Y04

PROTOTYPE ISSUE DATE
JAN 05 D

STORE NAME
JIM & JASMINE # 238

SHEET NUMBER
C3.1

GRADING 3 OF 5

W:\Data\harman\2005\H0510_san jose_bascom\03_cd_current\010A_C3-1_DET.dwg modified by Dhonnigan at Jun 26, 2006 - 3:26pm

17	NOT USED	13	NOT USED
18	NOT USED	14	NOT USED
19	NOT USED	15	NOT USED
20	NOT USED	16	NOT USED

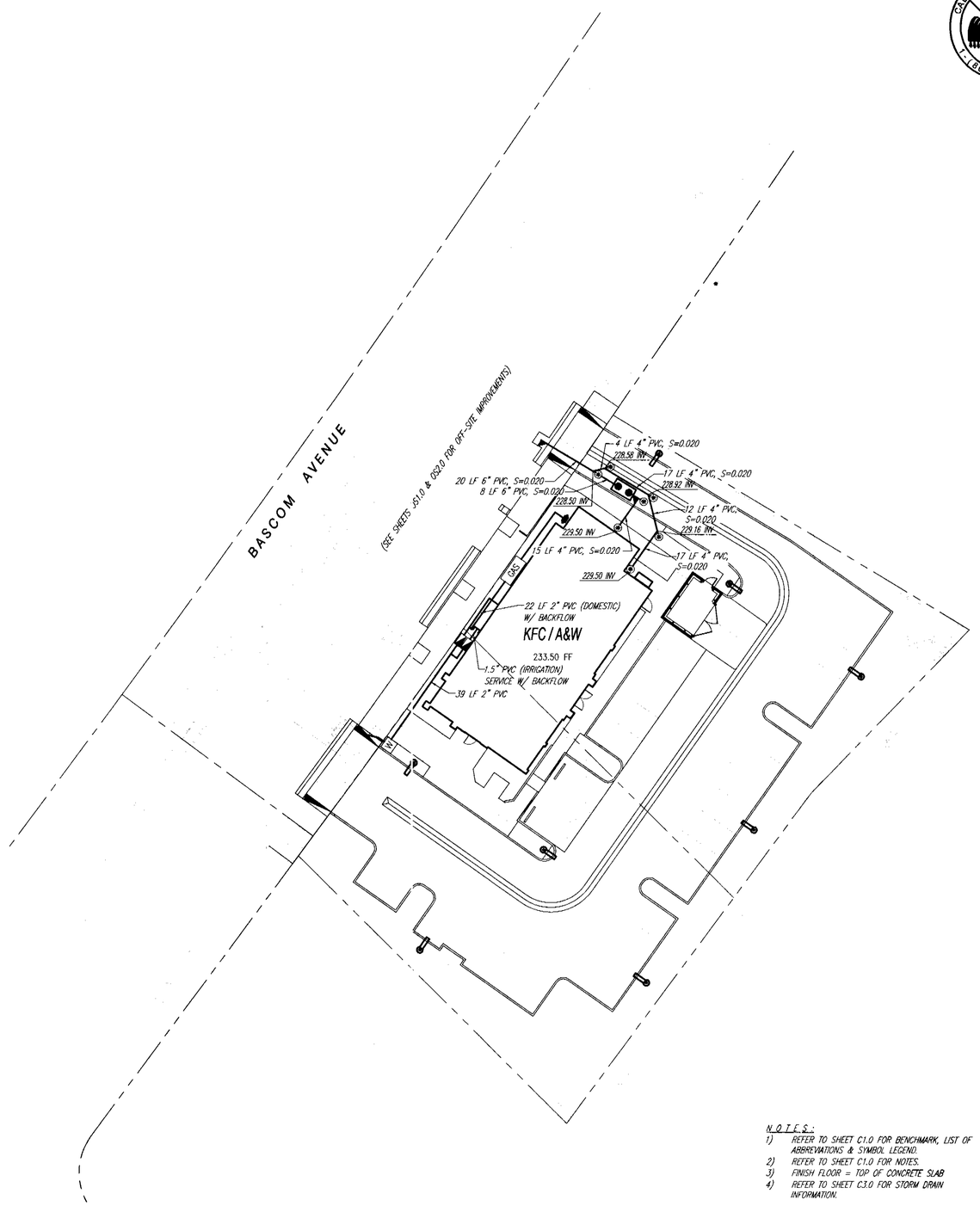

NOTES:
1) REFER TO SHEET C1.0 FOR BENCHMARK, LIST OF ABBREVIATIONS & SYMBOL LEGEND.
2) REFER TO SHEET C1.0 FOR NOTES.
3) FINISH FLOOR = TOP OF CONCRETE SLAB
4) REFER TO SHEET C3.0 FOR STORM DRAIN INFORMATION.

SCALE: 1" = 20'

CALL BEFORE YOU DIG 1-(800)-227-2600

ALL AMERICAN FOODS

Harman Management, Inc.
199 First Street, Suite 212
Los Altos, CA 94022
650-941-5681

K W ENGINEERING
2237 SCENIC DRIVE
MODESTO, CA. 95355
TEL: (209) 523-5523
FAX: (209) 529-7804

ASSOCIATES
ARCHITECTURE & SURVEYING
6130 FREEPORT BLVD. SUITE 101 A
SACRAMENTO, CA. 95822
TEL: (916) 429-2800
FAX: (916) 429-2553

JOB NUMBER
05M011

REGISTERED PROFESSIONAL ENGINEER
ALLAN V. STEVENSON
No. C61758
exp. 6/30/07
CIVIL
STATE OF CALIFORNIA

UTILITIES PLAN

ADDRESS:
3144 S. BASCOM AVE.
SAN JOSE, CA 95124-2022
APN# 414-14-075 & 076

RECORD DATES

DATE	DESCRIPTION

REVISIONS

NO.	DATE	DESCRIPTION
1	4/28/06	PC RESPONSE #1

DATE
06/22/06

BUILDING TYPE
KA60Y04

PROTOTYPE ISSUE DATE
JAN 05 D

STORE NAME
JM & JASMINE # 238

SHEET NUMBER
C4.0

W:\Data\harman\2005\H0510_san jose_bascom\03_cd_current\011_C4-0_UTILITY.dwg modified by Dhennigan at Jun 26, 2006 - 3:27pm

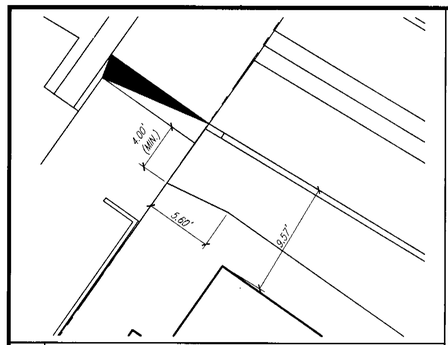

17 ENLARGED PLAN SCALE: 1" = 6'

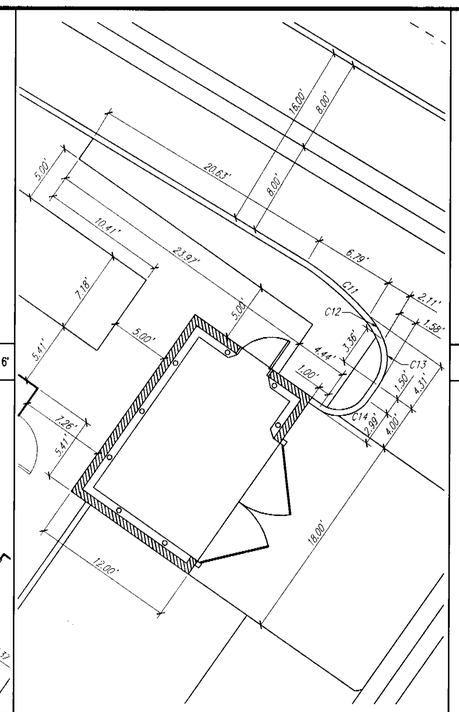

14 ENLARGED PLAN SCALE: 1" = 6'

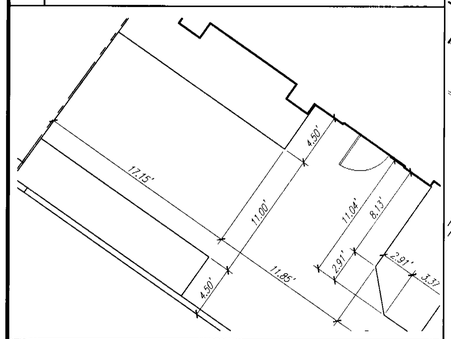

18 ENLARGED PLAN SCALE: 1" = 6'

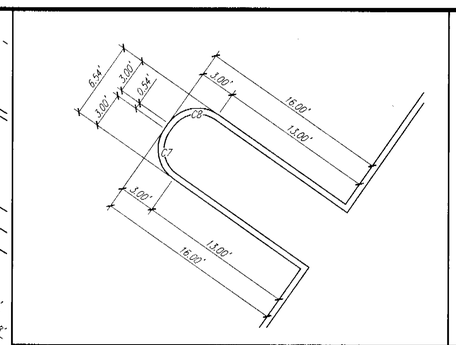

9 ENLARGED PLAN SCALE: 1" = 6'

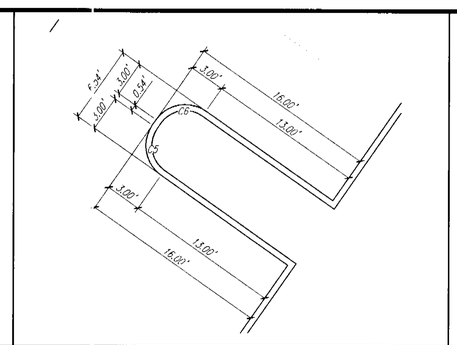

5 ENLARGED PLAN SCALE: 1" = 6'

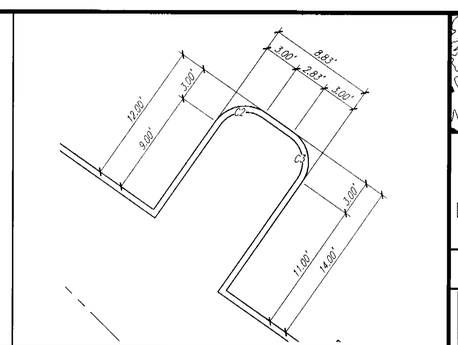

1 ENLARGED PLAN SCALE: 1" = 6'

CURVE TABLE

CURVE	RADIUS	LENGTH	DELTA ANGLE
C1	3.00'	4.71'	90°00'00"
C2	3.00'	4.71'	90°00'00"
C3	3.00'	4.71'	90°00'00"
C4	3.00'	4.71'	90°00'00"
C5	3.00'	4.71'	90°00'00"
C6	3.00'	4.71'	90°00'00"
C7	3.00'	4.71'	90°00'00"
C8	3.00'	4.71'	90°00'00"
C9	20.00'	1.41'	4°02'09"
C10	15.00'	24.62'	94°02'09"
C11	25.00'	6.91'	15°50'52"
C12	7.17'	2.39'	19°05'16"
C13	4.00'	3.98'	57°02'07"
C14	3.00'	4.71'	90°00'00"
C15	3.00'	4.71'	90°00'00"
C16	3.00'	4.71'	90°00'00"
C17	3.00'	4.68'	89°18'06"
C18	4.00'	6.24'	89°23'43"
C19	15.00'	23.56'	90°00'00"

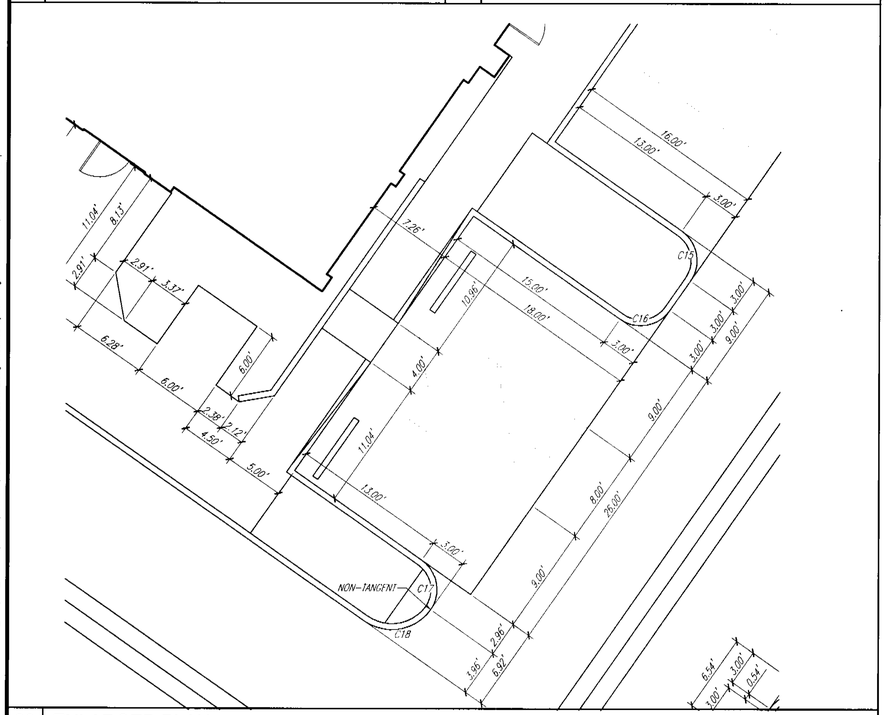

20 ENLARGED PLAN SCALE: 1" = 6'

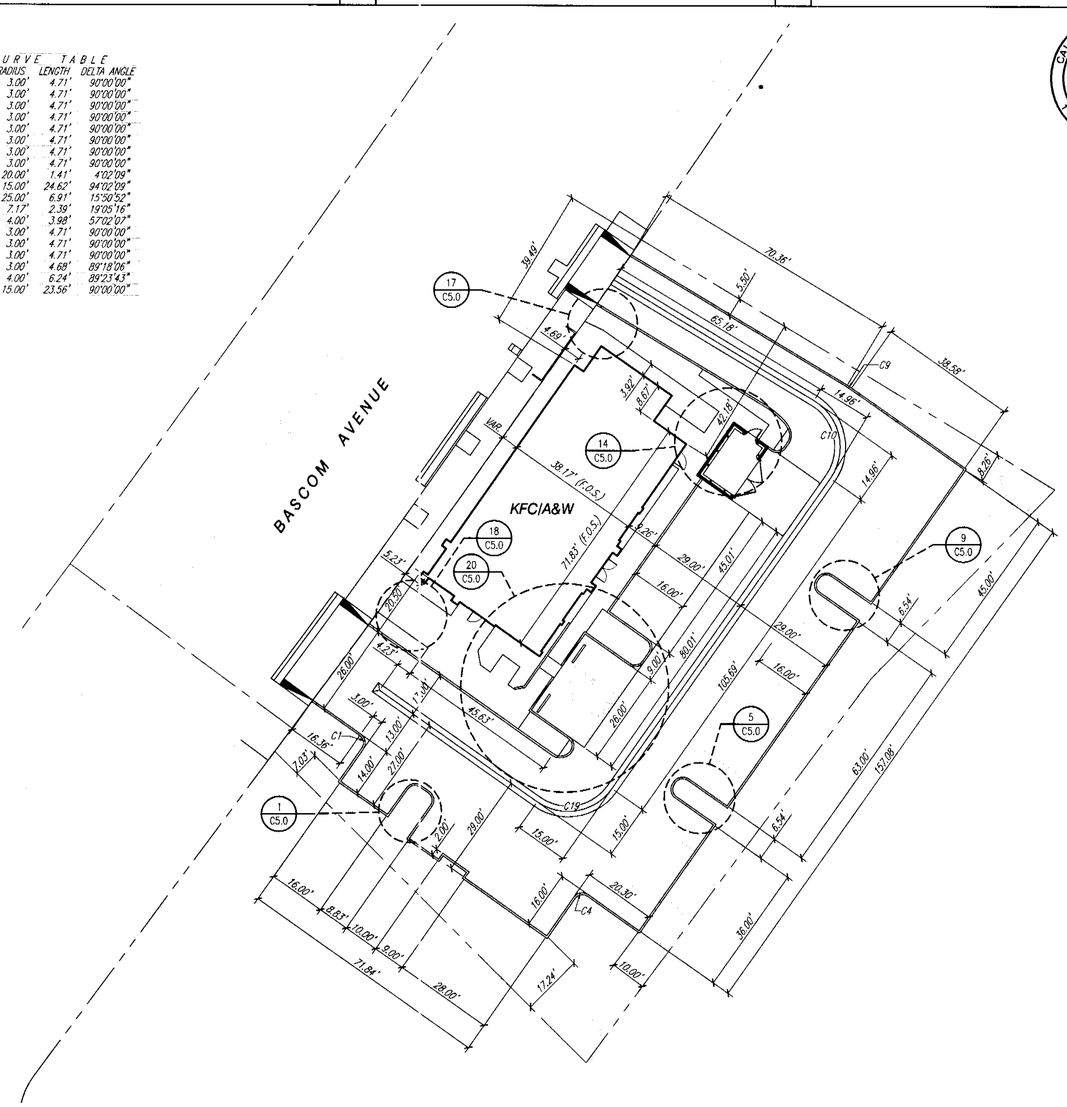

SCALE: 1" = 20'

CALL BEFORE YOU DIG 1-(800)-227-2600

ALL AMERICAN FOOD

Harman Management, Inc
199 First Street, Suite 212
Los Altos, CA 94022
650-941-5681

K W & ASSOCIATES
ENGINEERING ARCHITECTURE SURVEYING
8237 SCENIC DRIVE
MODESTO, CA 95355
TEL: (209) 523-3333
FAX: (209) 529-7804
6130 FREEPORT BLVD, SUITE 101
SACRAMENTO, CA 95822
TEL: (916) 429-2000
FAX: (916) 429-2353

JOB NUMBER
05M011

REGISTERED PROFESSIONAL ENGINEER
ALLAN V. STEVENSON
No. C61758
exp. 6/30/07
CIVIL
STATE OF CALIFORNIA

HORIZONTAL CONTROL PLAN

ADDRESS:
3144 S. BASCOM AVE.
SAN JOSE, CA 95124-2022
APN# 414-14-075 & 076

RECORD DATES

DATE	DESCRIPTION

REVISIONS

NO.	DATE	DESCRIPTION
1	4/28/06	PC RESPONSE #1

DATE 06/22/06

BUILDING TYPE KA60Y04

PROTOTYPE ISSUE DATE JAN 05 D

STORE NAME JIM & JASMINE # 238

SHEET NUMBER C5.0

W:\Data\harman\2005\H0510_san jose_bascom\03_cd_current\0118_C5-0_HORIZONTAL.dwg modified by jhannigan at Jun 26, 2006 - 3:27pm

STANDARD EROSION AND SEDIMENT CONTROL NOTES :

1. THE CONTRACTOR SHALL FOLLOW THE GUIDELINES FOR THE CITY OF SAN JOSE 'S "ADMINISTRATIVE AND TECHNICAL PROCEDURES MANUAL FOR GRADING AND EROSION AND SEDIMENT CONTROL" FOR THE MEASURES SHOWN OR STATED ON THESE PLANS. PROVIDE PERIMETER SILT FENCING OR STRAW BALES.
2. CONTRACTOR MUST ENSURE THAT THE CONSTRUCTION SITE IS PREPARED PRIOR TO THE ONSET OF ANY STORM. CONTRACTOR SHALL HAVE ALL EROSION AND SEDIMENT CONTROL MEASURES IN PLACE FOR THE WINTER MONTHS PRIOR TO OCTOBER 1.
3. ALL EROSION AND SEDIMENT CONTROL MEASURES SHALL BE MAINTAINED UNTIL DISTURBED AREAS ARE STABILIZED. CHANGES TO THIS EROSION AND SEDIMENT CONTROL PLAN SHALL BE MADE TO MEET FIELD CONDITIONS ONLY WITH THE APPROVAL OF OR AT THE DIRECTION OF A REPRESENTATIVE OF THE DEPARTMENT OF UTILITIES.
4. THIS PLAN MAY NOT COVER ALL THE SITUATIONS THAT ARISE DURING CONSTRUCTION DUE TO UNANTICIPATED FIELD CONDITIONS. VARIATIONS MAY BE MADE TO THE PLAN IN THE FIELD SUBJECT TO THE APPROVAL OF OR AT THE DIRECTION OF A REPRESENTATIVE OF THE DEPARTMENT OF UTILITIES.
5. ALL EROSION AND SEDIMENT CONTROL MEASURES SHALL BE CHECKED BEFORE AND AFTER ALL STORMS TO ENSURE MEASURES ARE FUNCTIONING PROPERLY.
6. CONTRACTOR SHALL MAINTAIN A LOG AT THE SITE OF ALL INSPECTIONS OR MAINTENANCE OF BMPS, AS WELL AS, ANY CORRECTIVE CHANGES TO THE BMPS OR EROSION AND SEDIMENT CONTROL PLAN.
7. IN AREAS WHERE SOIL IS EXPOSED, PROMPT REPLANTING WITH NATIVE COMPATIBLE, DROUGHT -RESISTANT VEGETATION SHALL BE PERFORMED. NO AREAS WILL BE LEFT EXPOSED OVER THE WINTER SEASON.
8. THE CONTRACTOR SHALL INSTALL THE STABILIZED CONSTRUCTION ENTRANCE PRIOR TO COMMENCEMENT OF GRADING. LOCATION OF THE ENTRANCE MAY BE ADJUSTED BY THE CONTRACTOR TO FACILITATE GRADING OPERATIONS. ALL CONSTRUCTION TRAFFIC ENTERING THE PAVED ROAD MUST CROSS THE STABILIZED CONSTRUCTION ENTRANCE. THE STABILIZED CONSTRUCTION ENTRANCE SHALL REMAIN IN PLACE UNTIL THE ROAD BASE ROCK COURSE IS COMPLETED.
9. ALL SEDIMENT DEPOSITED ON PAVED ROADWAYS SHALL BE SWEPT AT THE END OF EACH WORKING DAY OR AS NECESSARY.
10. CONTRACTOR SHALL PLACE INLET FILTER BAGS AROUND ALL NEW DRAINAGE STRUCTURE OPENINGS IMMEDIATELY AFTER THE STRUCTURE OPENING IS CONSTRUCTED. THESE INLET FILTER BAGS SHALL BE MAINTAINED AND REMAIN IN PLACE UNTIL CONSTRUCTION IS COMPLETED.
11. CONTRACTOR SHALL IMPLEMENT HOUSEKEEPING PRACTICES AS FOLLOWS:

1. SOLID WASTE MANAGEMENT :
PROVIDE DESIGNATED WASTE COLLECTION AREAS AND CONTAINERS. ARRANGE FOR REGULAR REMOVAL AND DISPOSAL. CLEAR SITE OF TRASH INCLUDING ORGANIC DEBRIS, PACKAGING MATERIALS, SCRAP OR SURPLUS BUILDING MATERIALS AND DOMESTIC WASTE DAILY.

2. MATERIAL DELIVERY AND STORAGE :
PROVIDE A DESIGNATED MATERIAL STORAGE AREA WITH SECONDARY CONTAINMENT SUCH AS BERMING. STORE MATERIAL ON PALLETS AND PROVIDE COVERING FOR SOLUBLE MATERIALS. RELOCATE STORAGE AREA INTO BUILDING SHELL WHEN POSSIBLE. INSPECT AREA WEEKLY.

3. CONCRETE WASTE :
PROVIDE A DESIGNATED AREA FOR A TEMPORARY PIT TO BE USED FOR CONCRETE TRUCK WASH-OUT. DISPOSE OF HARDENED CONCRETE OFFSITE. AT NO TIME SHALL A CONCRETE TRUCK DUMP ITS WASTE AND CLEAN ITS TRUCK INTO THE CITY STORM DRAINS VIA CURB AND GUTTER. INSPECT DAILY TO CONTROL RUNOFF, AND WEEKLY FOR REMOVAL OF HARDENED CONCRETE.

4. PAINT AND PAINTING SUPPLIES :
PROVIDE INSTRUCTION TO EMPLOYEES AND SUBCONTRACTORS REGARDING REDUCTION OF POLLUTANTS INCLUDING MATERIAL STORAGE, USE, AND CLEAN UP. INSPECT SITE WEEKLY FOR EVIDENCE OF IMPROPER DISPOSAL.

5. VEHICLE FUELING, MAINTENANCE AND CLEANING :
PROVIDE A DESIGNATED FUELING AREA WITH SECONDARY CONTAINMENT SUCH AS BERMING. DO NOT ALLOW MOBILE FUELING OF EQUIPMENT. PROVIDE EQUIPMENT WITH DRIP PANS. RESTRICT ONSITE MAINTENANCE AND CLEANING OF EQUIPMENT TO A MINIMUM. INSPECT AREA WEEKLY.

6. HAZARDOUS WASTE MANAGEMENT :
PREVENT THE DISCHARGE OF POLLUTANTS FROM HAZARDOUS WASTES TO THE DRAINAGE SYSTEM THROUGH PROPER MATERIAL USE, WASTE DISPOSAL AND TRAINING OF EMPLOYEES. HAZARDOUS WASTE PRODUCTS COMMONLY FOUND ON-SITE INCLUDE BUT ARE NOT LIMITED TO PAINTS & SOLVENTS, PETROLEUM PRODUCTS, FERTILIZERS, HERBICIDES & PESTICIDES, SOIL STABILIZATION PRODUCTS, ASPHALT PRODUCTS AND CONCRETE CURING PRODUCTS.

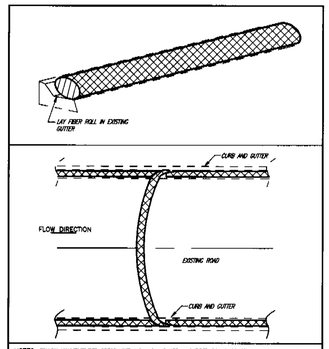

NOTES: FOLLOW MANUFACTURES SPECS WHEN JOINING AND APPLYING FIBER ROLLS, OTHERWISE USE THE ABOVE GUIDELINES. IN EXISTING CURB AND GUTTER LAY FIBER ROLL MATERIAL ALONG ITS LENGTH IN THE GUTTER.

FIBER ROLL BARRIER

17 FIBER ROLL BARRIER N.T.S.

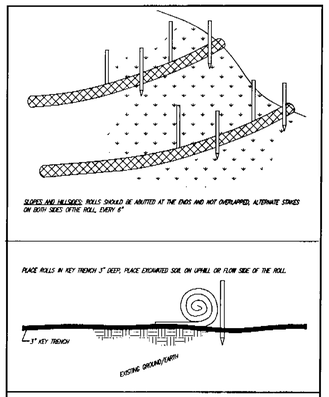

NOTES: FOLLOW MANUFACTURES SPECS WHEN JOINING AND APPLYING FIBER ROLLS.

FIBER ROLL NOTES AND USAGE

14 FIBER ROLL BARRIER N.T.S.

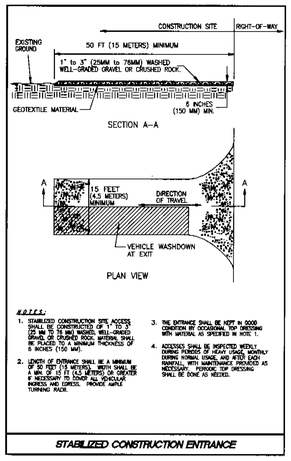

STABILIZED CONSTRUCTION ENTRANCE

18 STABILIZED CONSTRUCTION ENTRANCE

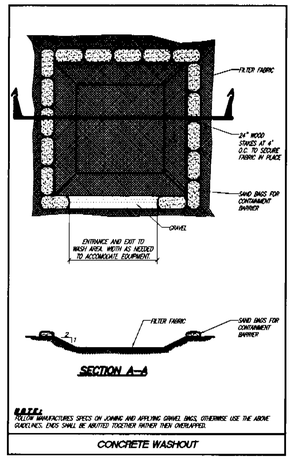

NOTE:
FOLLOW MANUFACTURES SPECS ON JOINING AND APPLYING GRAVEL BAGS, OTHERWISE USE THE ABOVE GUIDELINES. ENDS SHALL BE ABUTTED TOGETHER RATHER THEN OVERLAPPED.

CONCRETE WASHOUT

15 CONCRETE WASHOUT N.T.S.

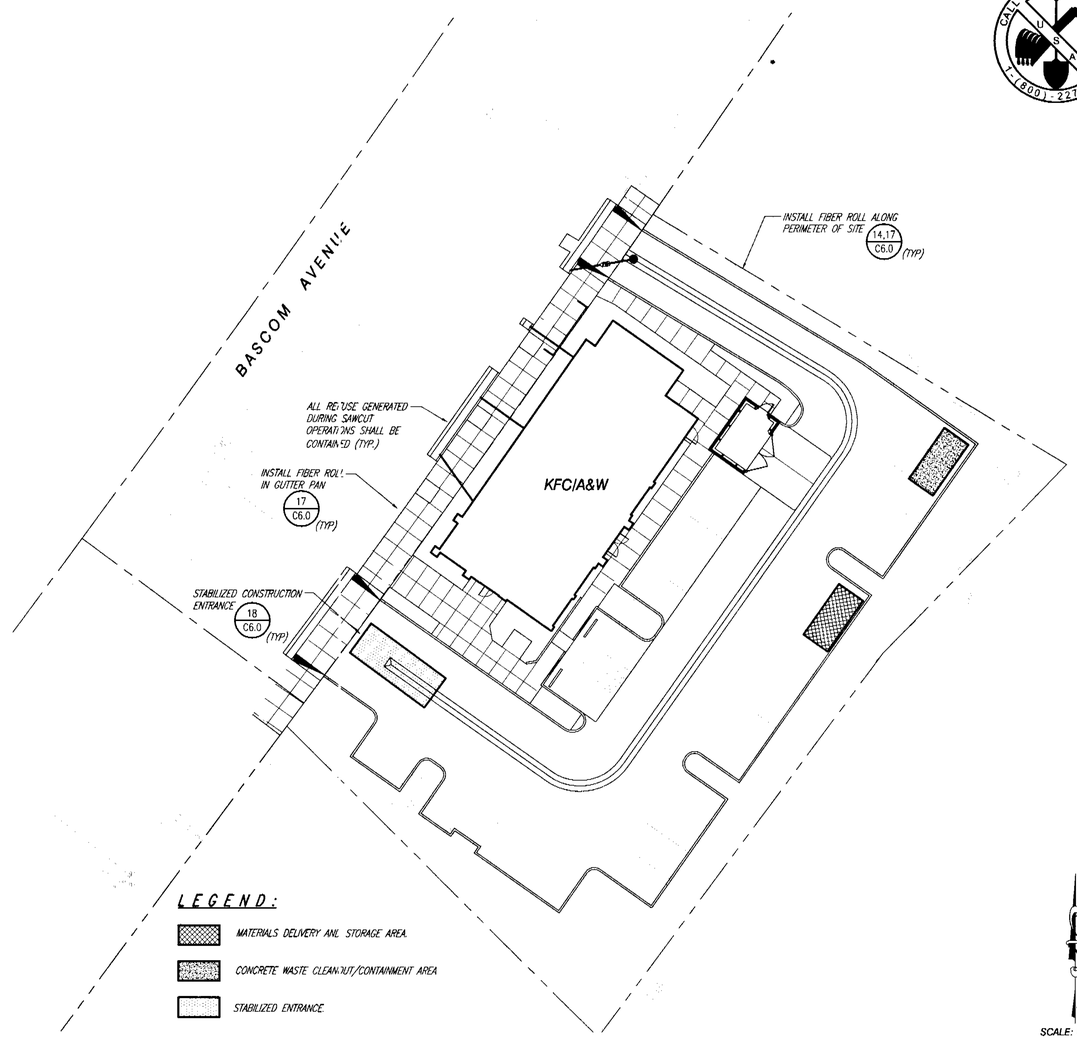

CALL BEFORE YOU DIG 1-(800)-227-2600

Harman Management, Inc.
199 First Street, Suite 212
Los Altos, CA 94022
650-941-5681

SINK WEST & ASSOCIATES
CIVIL ENGINEERING & SURVEYING
ARCHITECTURE
12161 DUNLEY BLVD. SUITE 101 A
SACRAMENTO, CA. 95822
TEL: (916) 429-2553
FAX: (916) 429-2553
8222 27 SCENIC DRIVE
MODESTO, CA. 95355
TEL: (209) 545-3213
FAX: (209) 529-7604

JOB NUMBER
05M011

REGISTERED PROFESSIONAL ENGINEER
ALLAN V. STEVENSON
No. C61758
exp. 6/30/07
CIVIL
STATE OF CALIFORNIA

EROSION CONTROL PLAN

ADDRESS:
3144 S. BASCOM AVE.
SAN JOSE, CA 95124-2022
APN# 414-14-075 & 076

RECORD DATES

DATE	DESCRIPTION

REVISIONS

NO.	DATE	DESCRIPTION
1	4/28/06	PC RESPONSE #1
2		
3		
4		
5		
6		

DATE
06/22/06

BUILDING TYPE
KA60Y04

PROTOTYPE ISSUE DATE
JAN 05 D

STORE NAME
JIM & JASMINE # 238

SHEET NUMBER
C6.0

GRADING 4 OF 5

W:\Data\harman\2005\H0510_san jose_bascom\03_cd_current\011C_06-0_EROSION.dwg modified by Dhanragan at Jun 26, 2006 - 3:27pm

17	NOT USED	13	NOT USED
18	NOT USED	14	NOT USED
19	NOT USED	15	NOT USED
20	NOT USED	16	NOT USED

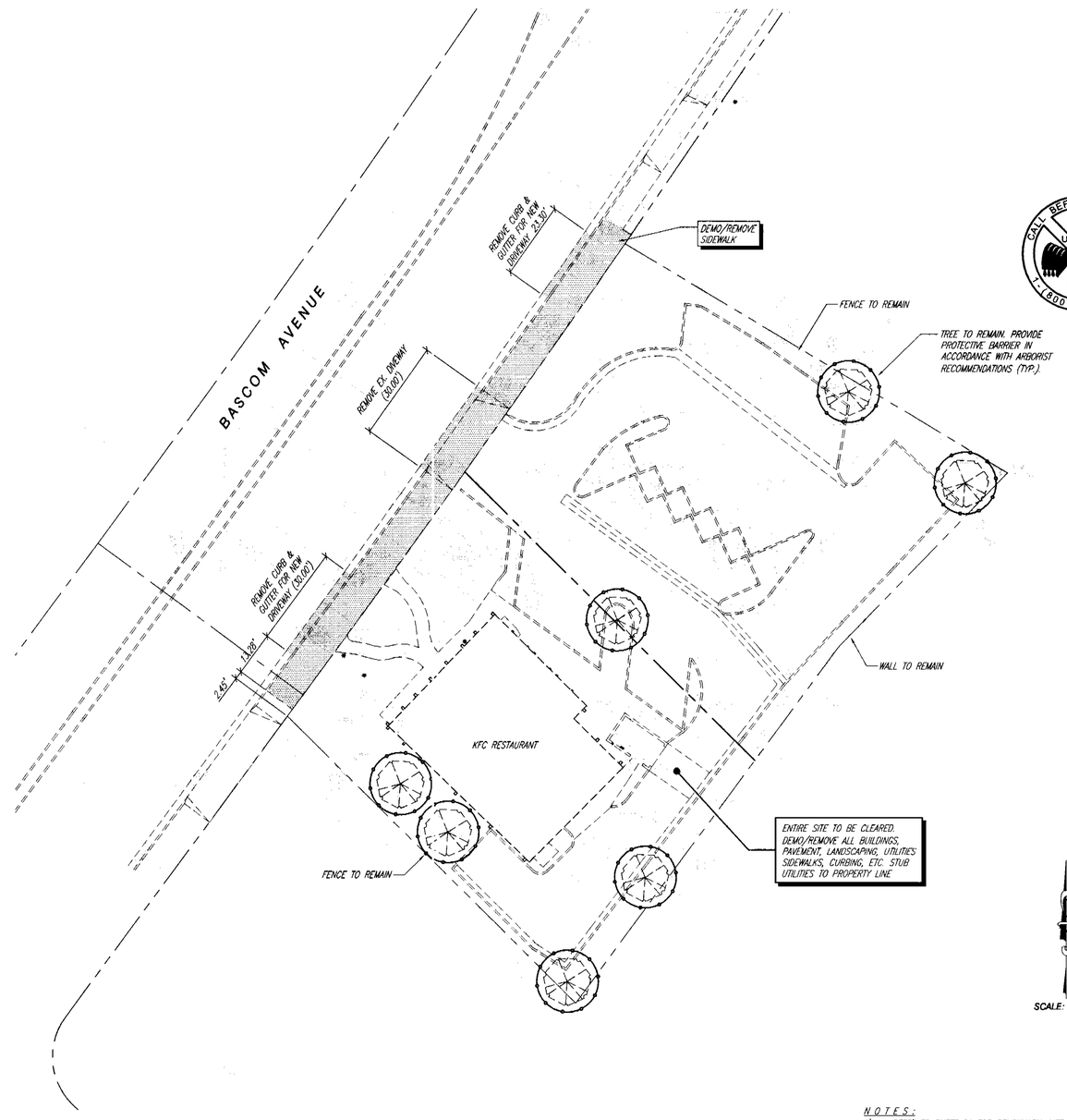

N O T E S :
1) REFER TO SHEET C1 FOR BENCHMARK, LIST OF ABBREVIATIONS & SYMBOL LEGEND.
2) REFER TO SHEET C1 FOR NOTES.

ALL AMERICAN POOL

Harman Management, Inc.
199 First Street, Suite 212
Los Altos, CA 94022
650-941-5681

S K W & A S S O C I A T E S
ENGINEERING • ARCHITECTURE • SURVEYING
MODESTO, CA 95355 CLOVIS/FRESNO PL SD, SUITE 101-A
TEL: (209) 523-3523 SACRAMENTO, CA. 95822
FAX: (209) 526-7804 TEL: (916) 429-2600
FAX: (916) 429-2633

JO NUMBER
05M011

REGISTERED PROFESSIONAL ENGINEER
ALLAN V. STEVENSON
No. C61758
exp. 6/30/07
CIVIL
STATE OF CALIFORNIA

DEMOLITION PLAN

ADDRESS:
3144 S. BASCOM AVE.
SAN JOSE, CA 95124-2022
APN# 414-14-075 & 076

RECORD DATES

DATE	DESCRIPTION
	-

REVISIONS

NO.	DATE	DESCRIPTION
1	4/28/06	PC RESPONSE #1

DATE
06/22/06

BUILDING TYPE
KA60Y04

PROTOTYPE ISSUE DATE
JAN 05 D

STORE NAME
JIM & JASMINE # 238

SHEET NUMBER
C7.0

GRADING 5 OF 5

W:\Data\harman\2005\H2510_san jose_bascom\03_cd_current\0110_C7-0_DEMO.dwg modified by Dhaningan at Jun 26, 2006 - 3:27pm

OFFSITE IMPROVEMENT PLANS FOR:

KFC / A&W

3144 S. BASCOM
SAN JOSE, CALIFORNIA
JUNE, 2006

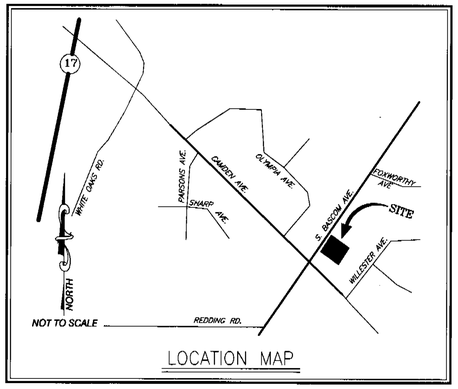

LOCATION MAP

LEGEND

DESCRIPTION	PROPOSED	EXISTING
SANITARY SEWER	6"SS	6"SS
STORM SEWER	12"SD	12"SD
GAS LINE	2"G	2"G
WATER LINE	8"W	8"W
TELEPHONE	TEL	TEL
GAS VALVE	GV	GV
WATER VALVE	WV	WV
GRADES/ELEVATIONS	147.00 FG	×147.00
PAD ELEVATION	148.4	
SLOPE/FLOW DIRECTION	SLOPE	SLOPE
CONTOUR LINE		148
CENTERLINE		
MANHOLE		
CATCH BASIN		
GAS METER	G	G
WATER METER	W	W
CURB AND GUTTER		
SIDEWALK		
DRIVEWAY		
FIRE HYDRANT		
SIGN		
SANITARY SEWER CLEAN OUT		
UTILITY POLE		
FENCE		
ELECTROLIER		
MONUMENT WELL		

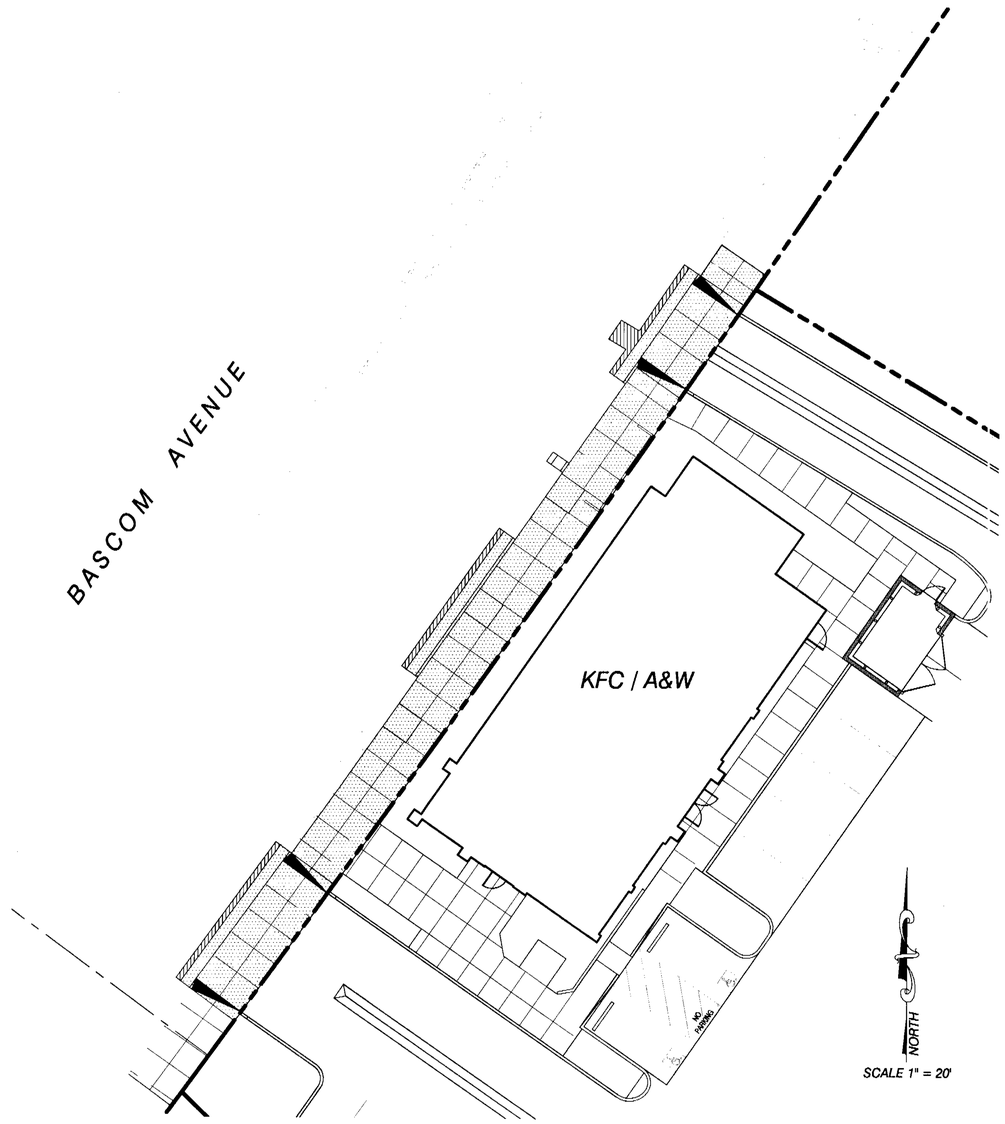

CITY STANDARD NOTES

1. APPROVAL OF THESE PLANS DOES NOT RELEASE THE OWNER OF THE RESPONSIBILITY FOR THE CORRECTION OF MISTAKES, ERRORS OR OMISSIONS CONTAINED THEREIN. IF DURING THE COURSE OF CONSTRUCTION OF THE IMPROVEMENTS, PUBLIC INTEREST REQUIRES A MODIFICATION OF OR A DEPARTURE FROM THE CITY SPECIFICATIONS OR THESE IMPROVEMENT PLANS, THE CITY ENGINEER SHALL HAVE THE AUTHORITY TO REQUIRE SUCH MODIFICATION OR DEPARTURE AND TO SPECIFY THE MANNER IN WHICH THE SAME IS TO BE MADE.
2. ALL WORK SHALL BE DONE IN ACCORDANCE WITH THE 1992 STANDARD SPECIFICATIONS FOR PUBLIC WORKS CONSTRUCTION AND THE 1992 STANDARD DETAILS AND SUB-SEQUENT ADDENDA FOR PUBLIC WORKS CONSTRUCTION AS ADOPTED BY THE CITY COUNCIL.
3. CONTRACTOR SHALL NOTIFY THE PROJECT INSPECTOR AT LEAST 48 HOURS PRIOR TO STARTING WORK.
4. ALL CONTRACTORS WILL BE RESPONSIBLE FOR THE VERIFICATION OF LOCATIONS OF ALL EXISTING UTILITIES IN THE FIELD. ALL CONTRACTORS SHALL CALL U.S.A (CA. 1-800-227-2600) 48 HOURS BEFORE DIGGING, AND OBTAIN AN IDENTIFICATION NUMBER (SECTION 4210.1 OF THE GOVERNMENT CODE).
5. COMPACT SUBGRADE FOR SIDEWALK, DRIVEWAYS, AND SIMILAR STRUCTURES TO 90% MINIMUM RELATIVE DENSITY IN LIEU OF THE 95% REQUIRED IN SECTION 21-1.05 OF THE STANDARD SPECIFICATIONS. COMPACT CURB & GUTTER SUBGRADE TO 95%. RELATIVE COMPACTION AND MOISTURE CONTENT OF ALL NATIVE MATERIALS SHALL BE DETERMINED BY ASTM D2922/D3017 AND D1557.
6. ALL ASPHALT CONCRETE MIX SHALL BE TYPE 'A' - 3/4 " COARSE FOR BASE, 3/4 " MEDIUM FOR SURFACE AND 1/2 " MEDIUM FOR CONFORMS. AC COMPACTION SHALL BE DETERMINED BY ASTM D2950 OR BY TESTING CORES SELECTED PER ASTM D979 // D3665 AND TESTED PER CAL 308. AC MAXIMUM DENSITY AND AIR VOID CONTENT SHALL BE DETERMINED ON CAL 304 SPECIMENS TESTED PER ASTM D1188. AIR VOID CONTENT OF ALL AC SHALL BE 3-6% PER ASTM D3203. PRIOR TO CONSTRUCTING AC OVERLAY, FILL ALL CRACKS GREATER THAN 1/4 " WIDE WITH CRACKFILLER AND REMOVE AND REPLACE FAILED AREAS. ALL AC SURFACES TO BE 98% RELATIVE COMPACTION (U.O.N.).
7. ASPHALT COATING:
   A. APPLY TACK COAT (AKA PAINT BINDER) TO SURFACES DESIGNATED IN, AND IN ACCORDANCE WITH, SECTION 39-4.02 OF THE 1988 CALTRANS STANDARD SPECIFICATIONS. THE ASPHALTIC EMULSION USED SHALL BE SS-1H.
   B. PRIME COAT ALL AGGREGATE BASE SURFACES PRIOR TO PLACING A.C. PAVING UNLESS THE TOTAL THICKNESS OF A.C. PAVING IS 0.5 FOOT OR GREATER. PRIME COAT ALL AGGREGATE BASE SURFACES THAT WILL BE SUBJECTED TO TRAFFIC PRIOR TO PAVING.
   C. CONSTRUCT PRIME COAT IN ACCORDANCE WITH SECTION 39-4.02 OF THE 1992 CALTRANS STANDARD SPECIFICATION, WITH THE EXCEPTION THAT SS-1H ASPHALTIC EMULSION SHALL BE USED IN LIEU OF LIQUID ASPHALT. PRIME COAT NOT REQUIRED FOR FULL DEPTH AC ALTERNATE.
8. ALL IRRIGATION LINES OR OTHER PRIVATELY OWNED UNDERGROUND LINES THAT REQUIRE RELOCATION AS DETERMINED BY THE CITY ENGINEER SHALL BE AT THE SOLE EXPENSE OF THE DEVELOPER.
9. TEMPORARY STREET SIGNS TO BE INSTALLED AT ALL INTERSECTIONS BEFORE UNITS ARE OCCUPIED.
10. AS A WATER CONSERVATION MEASURE, USE OF FIRE HYDRANT WATER OR ANY OTHER SOURCE OF POTABLE WATER FOR CONSTRUCTION PURPOSES IS PROHIBITED. RECLAIMED WATER IS AVAILABLE, ON A COST RECOVERY BASIS, AT THE CITY WATER POLLUTION CONTROL PLANT LOCATED AT 700 LOS ESTEROS ROAD. FOR MORE INFORMATION, PLEASE CALL TOM HOGAN OR PAT KWOK AT (408) 945-5300.
11. HAZARDOUS MATERIAL:
    UPON DISCOVERY OF HAZARDOUS MATERIAL THE CONTRACTOR SHALL PROMPTLY NOTIFY THE CITY IN WRITING OF ANY:
    A. MATERIAL THAT THE CONTRACTOR BELIEVES MAY BE MATERIAL THAT IS HAZARDOUS WASTE, AS DEFINED IN SECTION 25117 OF THE HEALTH AND SAFETY CODE, THAT IS REQUIRED TO BE REMOVED TO A CLASS I, CLASS II, OR CLASS III DISPOSAL SITE IN ACCORDANCE WITH PROVISIONS OF EXISTING LAW.
    B. SUBSURFACE OR LATENT PHYSICAL CONDITIONS AT THE SITE DIFFERING FROM THOSE INDICATED.
    C. UNKNOWN PHYSICAL CONDITIONS AT THE SITE OF ANY UNUSUAL NATURE, DIFFERENT MATERIALLY FROM THOSE ORDINARILY ENCOUNTERED AND GENERALLY RECOGNIZED AS INHERENT IN WORK OF THE CHARACTER PROVIDED FOR IN THE CONTRACT. THE DEVELOPER'S AGENT SHALL PROMPTLY INVESTIGATE THE SUSPECTED CONDITION AND, AS NECESSARY, INITIATE FURTHER ANALYSIS OF THE PROBLEM. IF REMEDIATION IS REQUIRED, A REMEDIATION PLAN WILL BE SUBMITTED TO THE DIRECTOR OF PUBLIC WORKS FOR REVIEW BY ENVIRONMENTAL MANAGEMENT AND, UPON APPROVAL BY THE DIRECTOR, BE IMPLEMENTED AT THE DEVELOPER'S SOLE EXPENSE.
12. IN THE EVENT THAT HUMAN REMAINS AND/OR CULTURAL MATERIALS ARE FOUND, ALL PROJECT-RELATED CONSTRUCTION SHALL CEASE WITHIN A 100-FOOT RADIUS. THE CONTRACTOR SHALL, PURSUANT TO SECTION 7050.5 OF THE HEALTH AND SAFETY CODE, AND SECTION 5097.94 OF THE PUBLIC RESOURCES CODE OF THE STATE OF CALIFORNIA, NOTIFY THE SANTA CLARA CORONER IMMEDIATELY.
13. CONTRACTOR SHALL PROVIDE VIDEO INSPECTION OF ALL STORM AND SANITARY SEWER MAINS. VIDEO INSPECTION OF ALL MAINS SHALL BE PERFORMED AFTER ALL TESTING HAS BEEN COMPLETED.
14. CONTRACTOR SHALL REMOVE ALL U.S.A. MARKINGS AS SOON AS THEY ARE NO LONGER NEEDED. ONLY CHALK PAINT SHALL BE USED IN THE REDEVELOPMENT AREA (BOUNDED BY JULIAN STREET AND HIGHWAY 280, AND BETWEEN HIGHWAY 87 AND FOURTH STREET). REMOVAL OF PAINT SHALL BE BY HIGH WATER PRESSURE METHOD ONLY.
15. CONTRACTOR SHALL STENCIL ALL STORM DRAIN INLETS AND CATCH BASINS WITH "NO DUMPING – FLOWS TO BAY" STENCIL. THE CONTRACTOR SHALL LOCATE THE STENCIL ON THE FACE OF THE CURB, ADJACENT TO THE CATCH BASIN HOOD. THE LEFT SIDE IS PREFERRED. THE STENCILS MAY BE OBTAINED, AT NO CHARGE, THROUGH THE ENVIRONMENTAL SERVICES DEPARTMENT (BILL SMITH) BY CALLING (408) 945-3054. COLORS TO BE USED ARE: BACKGROUND-BAUER WHITE, LETTERING-BAUER BLUE (HANDICAP). PAINT WILL BE A SEMI-GLOSS CURB PAINT FORMULATION.
16. INSTALLATION OF STREET TREES REQUIRES A PERMIT FROM THE DEPARTMENT OF TRANSPORTATION. THE CITY ARBORIST WILL SPECIFY SPECIES. CONTACT THE CITY ARBORIST AT (408) 277-4373 FOR A TREE PERMIT.
17. ALL VCP PIPE APPLICATIONS 10" IN DIAMETER AND GREATER SHALL REQUIRE RESILIENT COMPRESSION JOINTS (BELL & SPIGOT) AS PER SECTION 1302-4.2.2 OF THE CITY STANDARD SPECIFICATIONS. COMPRESSION COUPLINGS (BAND SEALS) ARE ALLOWED FOR VCP PIPE APPLICATIONS OF UP TO 8" IN DIAMETER AS APPROVED BY THE DIRECTOR OF PUBLIC WORKS.
18. IF CONTRACTOR DAMAGES EXISTING ASPHALT SECTION DURING THE REMOVAL OF EXISTING CURB & GUTTER OR AT THE DISCRETION OF THE PROJECT INSPECTOR, THE ASPHALT CONCRETE SHALL BE REPAIRED BY SAWCUTTING 12" MINIMUM FROM THE LIP OF GUTTER AND INSTALLING A 9" MINIMUM "DEEP-LIFT" AC SECTION.
19. CITY SURVEY MONUMENTS SHALL BE PRESERVED. IN THE EVENT THAT A CITY MONUMENT IS LOST TO CONSTRUCTION ACTIVITIES, THE CONTRACTOR SHALL, AT THE CONTRACTOR'S SOLE EXPENSE, BE RESPONSIBLE FOR ITS RE-ESTABLISHMENT AND THE FILING OF A CORNER RECORD WITH THE COUNTY SURVEYOR'S OFFICE. A RECORD OF SURVEY SHALL BE FILED FOR ALL NEW CITY MONUMENTS SET IN CONJUNCTION WITH THIS IMPROVEMENT PLAN, UNLESS A FINAL OR PARCEL MAP REQUIRING SAID MONUMENTS IS RECORDED AS PART OF THIS PROJECT.
20. PAVEMENT MARKING LAYOUT AND TRAFFIC SIGNAL LOOP LAYOUT SERVICES SHALL BE PROVIDED BY THE DEVELOPER'S ENGINEER, SURVEYOR, OR OTHER QUALIFIED PERSONNEL.
21. BENCHMARK: THE LETTER "X" IN THE WORK "PHOENIX ON TOP OF THE CATCH BASIN, LOCATED AT THE NORTHEAST RETURN OF CAMDEN AVENUE AT WILLSTER AVENUE. CTY OF SAN JOSE BENCHMARK NUMBER 467-S, HAVING AN ELEVATIND OF 232.87 FEET, MEAN SEA LEVEL
22. PLAN REFERENCES:

SHEET INDEX

SHEET NO.	SHEET TITLE
OS 1.0	COVER SHEET
OS 2.0	GRADING AND UTILITY PLAN

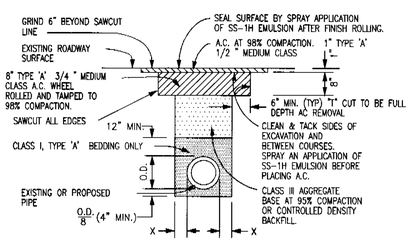

EXISTING STREET TRENCH RESTORATION

STREET NAME	ALT.	TOTAL ASPHALT PAVEMENT (IN FEET) (1)	STREET AGG. BASE (IN FEET) (2)	C. & G.	SDWK.	DRVWY.
				BASE MATERIAL (IN FEET) CLASS 3 AGGREGATE BASE UNLESS OTHERWISE SPECIFIED (2)		
	A					
	B					
	C					
	A					
	B					
	C					
	A					
	B					
	C					

PAVING AND ROCK CHART

"A" INDICATES FULL PAVEMENT
"B" INDICATES CLASS 2 AGGREGATE BASE
"C" INDICATES CLASS 3 AGGREGATE BASE

(1): TYPE "A" AC
(2): SECTION 26

REVISIONS	DESIGN BY	DESIGN DATE	CITY APPR.	APPR. DATE

REGISTERED PROFESSIONAL ENGINEER ALLAN V. STEVENSON No. C61758 exp. 6/30/07 CIVIL STATE OF CALIFORNIA

JOB NO.: 05M011

OFF-SITE IMPROVEMENT PLANS FOR:

KSF / A&W

3144 S. BASCOM AVENUE
SAN JOSE CALIFORNIA

S K W & A S S O C I A T E S
ENGINEERING ▫ ARCHITECTURE ▫ SURVEYING
2237 SCENIC DRIVE
MODESTO, CA. 95355
TEL : (209) 523-8323
FAX : (209) 529-7804
6130 FREEPORT BLVD. SUITE 101 A
SACRAMENTO, CA. 95822
TEL: (916) 429-2800
FAX: (916) 429-2553

DEPARTMENT OF PUBLIC WORKS

PERMIT # 02-999999
PROJECT # 3-99999

PROJECT INSPECTOR: FRANK MORENO
VM: (408) 998-6176

PROJECT ENGINEER
NAME DATE
DEPARTMENT OF TRANSPORTATION
NAME DATE
MUNICIPAL WATER
TIM TOWN DATE
STREETLIGHT LAYOUT APPROVED
N/A
GARY WOLTINGER – SR. CIVIL ENGINEER DATE
ELECTRICAL CIRCUITS APPROVED
N/A
GUXIANG CHEN – ELECTRICAL ENGINEER DATE
ADDITIONAL APPROVAL
N/A
NAME DATE

CITY OF SAN JOSE
CAPITOL OF SILICON VALLEY

APPROVED BY KATY ALLEN
DIRECTOR OF PUBLIC WORKS

SHEET OS1.0 OF 2

ON THIS PROJECT, EXCEPTING FOR LIABILITY ARISING FROM THE SOLE NEGLIGENCE OF THE OWNER OR THE ENGINEER.

REV. DATE JANUARY 2003

17 NOT USED

13 NOT USED

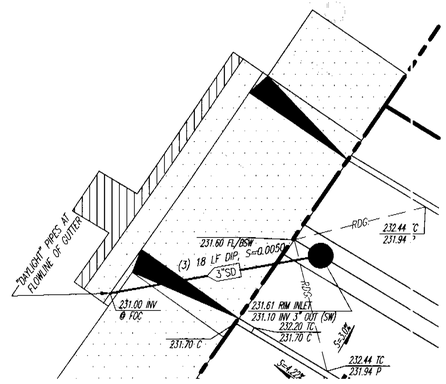

9 ENLARGED GRADING PLAN SCALE: 1" = 6'

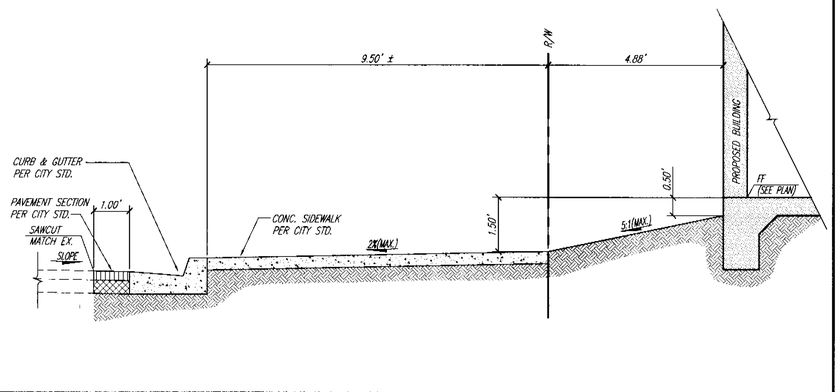

5 SECTION AT PROPERTY LINE

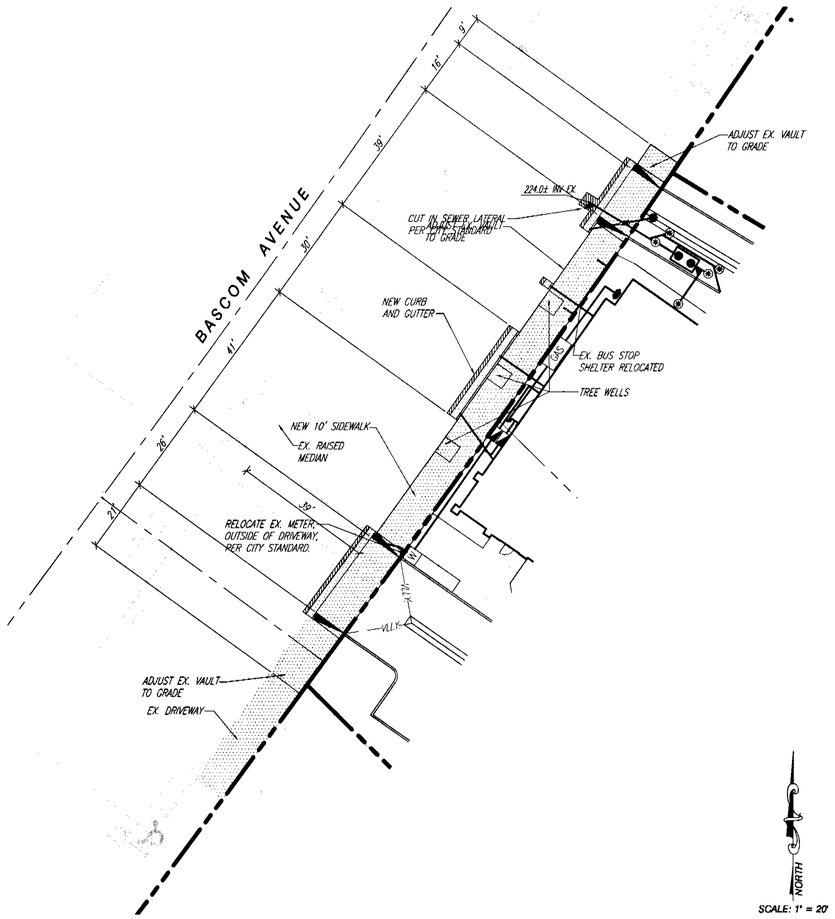

9 UTILITIES PLAN

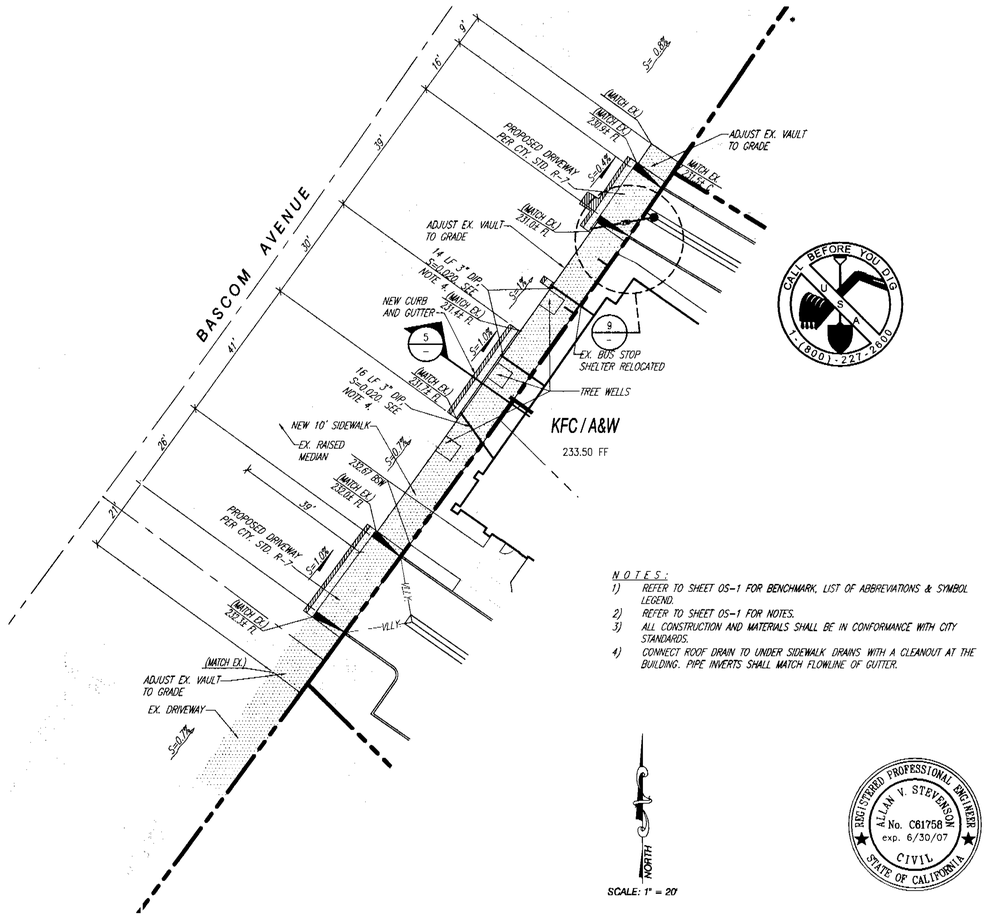

NOTES:

1) REFER TO SHEET OS-1 FOR BENCHMARK, LIST OF ABBREVIATIONS & SYMBOL LEGEND.
2) REFER TO SHEET OS-1 FOR NOTES.
3) ALL CONSTRUCTION AND MATERIALS SHALL BE IN CONFORMANCE WITH CITY STANDARDS.
4) CONNECT ROOF DRAIN TO UNDER SIDEWALK DRAINS WITH A CLEANOUT AT THE BUILDING. PIPE INVERTS SHALL MATCH FLOWLINE OF GUTTER.

JOB NO.: 05M011

9 GRADING PLAN

GRADING AND UTILITY PLAN

	REVISIONS	DESIGN BY	DESIGN DATE	CITY APPR.	APPR. DATE

S K W & A S S O C I A T E S
ENGINEERING ▫ ARCHITECTURE ▫ SURVEYING
08 2237 SCENIC DRIVE
MODESTO, CA. 95355
TEL : (209) 523-8323
FAX : (209) 529-7804
☐ 6130 FREEPORT BLVD. SUITE 101 A
SACRAMENTO, CA. 95822
TEL: (916) 429-2800
FAX: (916) 429-2553

PERMIT # H05-046
PROJECT # 3-00216

PROJECT INSPECTOR: FRANK MORENO
VM: (408) 998-6176

PROJECT ENGINEER		ADDITIONAL APPROVAL	
N/A			
NAME	DATE	NAME	DATE
DEPTARTMENT OF TRANSPORTATION		STREETLIGHT LAYOUT APPROVED	
N/A			
NAME	DATE	GARY WOLFINGER – SEN. CIVIL ENGINEER	DATE
MUNICIPAL WATER		ELECTRICAL CIRCUITS APPROVED	
N/A			
TIMM TOWN	DATE	GUXIANG CHEN – ELECTRICAL ENGINEER	DATE

DEPARTMENT OF PUBLIC WORKS
SAN JOSE, CALIFORNIA

CITY OF SAN JOSE
CAPITOL OF SILICON VALLEY

APPROVED BY KATY ALLEN
DIRECTOR OF PUBLIC WORKS

SHEET OS2.0 OF 2

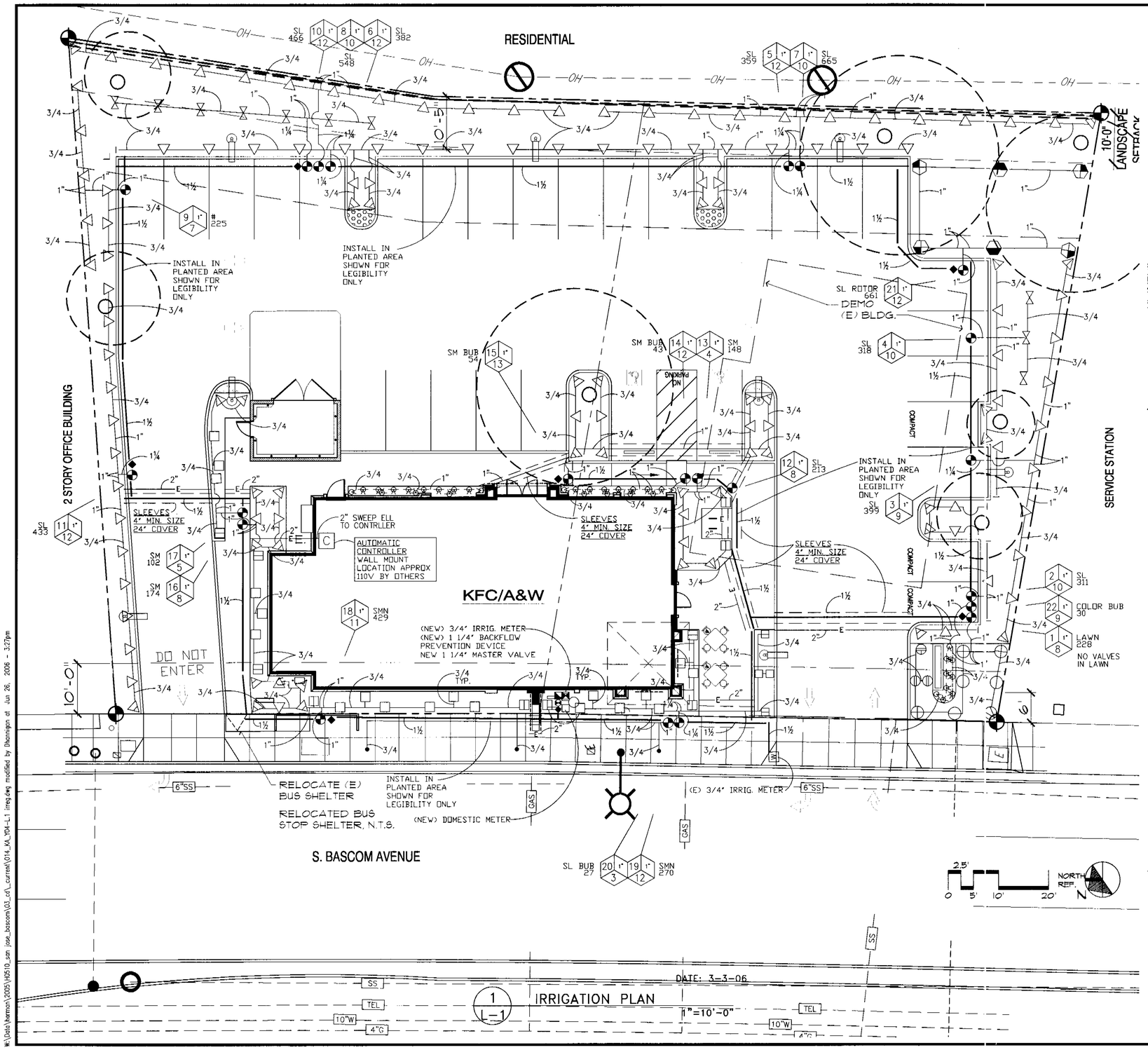

DATE: 3-13-06

IRRIGATION PLAN

IRRIGATION LEGEND

3/4 1" 1¼ 1½ 2"

SYMBOL	DESCRIPTION	MODEL NUMBER
	WATER METER (E)	-(E) 3/4" (INCH) WATER METER 13 GALLONS PER MINUTE DEMAND
	BACKFLOW PREVENTION DEVICE	-(NEW) FEBCO 825Y 1 1/4 (INCH) REQUIRED FOR PROPER OPERATION WITH WEATHER GUARD BLANKET & LOCK
	REMOTE CONTROL VALVE	-HARDIE 700 ULTRAFLOW SERIES 1" MINIMUM SIZE
	MASTER VALVE	-GRISWOLD 1-1/4" BRASS 2000 SERIES
	QUICK COUPLING VALVE	-RAINBIRD 33DRC
C	AUTOMATIC CONTROLLER	-IRRI-TROL MC 24 PLUS SERIES (WALL MOUNT)
(NOT SHOWN)	IRRIGATION SUPPLY LINE	-COPPER TYPE K RUN COPPER PIPE FROM POINT OF CONNECTION TO BACKFLOW & CONNECT TO SCH. 40 PVC IRRIGATION SUPPLY LINE BELOW FINISH GRADE
	IRRIGATION SUPPLY LINE	-1120/SCHEDULE 40 PVC PIPE - 18" COVER
	IRRIGATION SPRINKLER LINE	-1120/SCHEDULE 40 PVC PIPE - 12" COVER
E	ELECTRICAL CONDUIT	-1120/SCHEDULE 40 PVC PIPE - 24" COVER
	SLEEVES (SUPPLY LINE)	-1120/SCHEDULE 40 PVC PIPE - 24" COVER (18" COVER UNDER PEDESTRIAN WALKS)
	SLEEVES (SPRINKLER LINES)	-1120/SCHEDULE 40 PVC PIPE - 24" COVER (12" COVER UNDER PEDESTRIAN WALKS)

NOTE: ALL SLEEVES SHALL BE 4" (INCH) MINIMUM DIAMETER OR TWO SIZES LARGER THAN PIPE, WHICHEVER IS GREATER.

CONTROLLER STATION NUMBER
SIZE CONTROL VALVE
GALLONS PER MINUTE THRU VALVE

NOTE: THIS SYSTEM IS DESIGNED FOR A MAXIMUM OF 13 GPM @ 60 PSI STATIC PRESSURE. CONTRACTOR SHOULD VERIFY PRESSURE & GPM PRIOR TO INSTALLATION. IF DISCREPANCY OCCURS CONTACT KIRK MORTON @ 510-792-9193 PRIOR TO INSTALLATION.

IRRIGATION HEADS

SYMBOL	DESCRIPTION	MODEL NUMBER
	6" SHRUB POP-UP SPRAY HEAD 10' RAD.	TORO 570Z-COM-MPR 6P-10'-Q,T,H,TT,TQ,F
	6" SHRUB POP-UP SPRAY HEAD 6' RAD.	TORO 570Z-COM-MPR 6P-6'-QFS,HFS STANDARD GALLONAGE
	6" SHRUB POP-UP STRIP SPRAY HEAD 4' RAD.	TORO 570Z-COM-MPR 6P-4'-EST,SST
	6" SHRUB POP-UP STREAM BUBBLER	TORO 570Z-COM-MPR 6P-SB-2-90 1.0 GPM NOZ.
	6" SHRUB POP-UP STREAM BUBBLER	TORO 570Z-COM-MPR 6P-SB-180 1.0 GPM NOZ.
	6" SHRUB POP-UP STREAM BUBBLER	TORO 570Z-COM-MPR 6P-SB-2-180 1.0 GPM NOZ.
	6" SHRUB POP-UP FLOOD BUBBLER	TORO 570Z-COM-MPR 6P-FB-1.0 GPM NOZ.
	6" LAWN POP-UP SPRAY HEAD 10' RAD.	TORO 570Z-COM-MPR 6P-10' Q,T,H
	6" LAWN POP-UP STRIP SPRAY HEAD 4' RAD.	TORO 570Z-COM-MPR 6P-4'-EST,SST
	6" SHRUB POP-UP ROTOR 22' RAD.	RAINBIRD 3500 SERIES 3504-PC-SAM-22' 1.5 , 3.0 GPM NOZZLE

MORTON LANDSCAPE DESIGN CONSULTANT 510-792-9193
KIRK 37257 NILES BLVD. FREMONT, CA. 94536

ALL AMERICAN FOOD

Harman Management, Inc.
199 First Street, Suite 212
Los Altos, CA 94022
650-941-5881

Vincent+Murphy Incorporated
637 Fifth Avenue
San Rafael, Ca. 94901
(415) 451-2500
FAX 451-2595

JOB NUMBER H0510

SHEET TITLE: IRRIGATION PLAN

ADDRESS: 3144 S. BASCOM AVENUE SAN JOSE, CA. 95124-2022 APN# 414-14-075 & 076

RECORD DATES

DATE	DESCRIPTION
07/26/05	DESIGN REVIEW SUBMITTAL
	-
	-
	-

REVISIONS

NO.	DATE	DESCRIPTION

DATE 07/26/05

BUILDING TYPE KAW_MAPS II

PROTOTYPE ISSUE DATE 2005

STORE NAME JIM & JASMINE #238

SHEET NUMBER L-1

W:\Data\harman\2005\H0510_san jose_bascom\03_cd_current\014_KA_104-L1 irreg.dwg modified by thanington at Jun 26, 2006 - 3:27pm

IRRIGATION NOTES

1) SPRINKLER SYSTEM DESIGNED FOR A MAXIMUM OF 13 G.P.M. @ 60 P.S.I. STATIC PRESSURE. IRRIGATION CONTRACTOR TO VERIFY PRESSURE PRIOR TO INSTALLATION.

2) ALL THE EQUIPMENT REQUIRED BUT NOT SPECIFIED ON THE PLANS SHALL BE PROVIDED BY THE IRRIGATION CONTRACTOR TO INSURE A COMPLETE AND FUNCTIONAL SYSTEM. INSTALL ALL EQUIPMENT IN ACCORDANCE WITH MANUFACTURER'S INSTRUCTIONS AND AS INDICATED

3) INSTALL BACKFLOW PREVENTION DEVICE APPROXIMATELY WHERE INDICATED AND ACCORDING TO ALL STATE LOCAL CODES. INSTALL USING BRASS OR COPPER (TYPE 'K') NIPPLES, FITTINGS AND UNION. WRAP ALL BRASS OR COPPER NIPPLES AND FITTINGS BELOW FINISH GRADE WITH 10MIL CORROSION PROTECTION TAPE

4) CONTROLLER LOCATION APPROXIMATE. EXACT LOCATION OF WALL MOUNT OR PEDESTAL MOUNT CONTROLLER TO BE DETERMINED AT JOBSITE. 110 VOLT ELECTRICAL SUPPLY IS PROVIDED FOR IN IMMEDIATE VICINITY IN ANOTHER SECTION OF THE CONTACT. IRRIGATION CONTRACTOR TO MAKE FINAL 110 VOLT ELECTRICAL CONNECTION. USE WATER PROOF CONNECTIONS FOR OUTDOOR INSTALLATIONS.

5) THIS PLAN IS DIAGRAMMATIC AND ALL MAINLINES AND VALVES SHOWN IN HARD SURFACE AREAS ARE FOR LEGIBILITY PURPOSE ONLY AND SHALL BE INSTALLED IN PLANTED AREAS.

6) USE PRIMER DURING IRRIGATION SUPPLY LINE INSTALLATION

7) HOUSE REMOTE CONTROL VALVES IN RECTANGULAR PLASTIC BOX WITH BOLT DOWN LID. PLACE VALVES 12" INCHES FROM ADJACENT SIDEWALKS, BUILDINGS, ETC. ALL VALVES SHALL BE LOCATED IN SHRUB AREAS ONLY. SET TOP OF VALVE BOX FLUSH WITH FINISH GRADE. PLACE DRAIN ROCK UNDER VALVES TO A 6" INCH DEPTH WITH A 3" CLEARANCE UNDER VALVE STENCIL. VALVE BOX NUMBER ON LID. COIL 3' FEET OF EXCESS WIRE IN VALVE BOX. RUN 1 EXTRA WIRE THROUGHOUT SYSTEM. TAG VALVE WIRES IN VALVE BOXES. CHRISTY VALVE TAGS OR/EQUAL.

8) HOUSE QUICK COUPLING VALVES IN ROUND PLASTIC BOX WITH BOLT LID. SET TOP OF VALVE BOX FLUSH WITH FINISH GRADE. PLACE QUICK COUPLING VALVES 12" INCHES FROM ADJACENT WALKS, BUILDINGS, ETC. ALL VALVES SHALL BE LOCATED IN SHRUB AREAS ONLY. QUICK COUPLING VALVES TO HAVE TRIPLE SWING RISER ASSEMBLIES CONSISTING OF PVC SCHEDULE 80 NIPPLES AND FITTINGS. (LENGTH AS REQUIRED) BELOW Q.C.V.

9) INSTALL 6" INCH AND 12" INCH POP-UPS USING TRIPLE SWING RISER ASSEMBLIES CONSISTING OF SCHEDULE 80 NIPPLES AND SCHEDULE 40 FITTINGS. PLACE HEADS 2" INCHES FROM ADJACENT CURBS, SIDEWALKS ETC., AND SET 1/2" INCH ABOVE FINISH GRADE SET FLUSH WITH FINISH GRADE IN LAWN AREAS.

10) INSTALL SPRINKLER HEADS ALONG PARKING LOT CURBS ADJACENT TO PAINTED PARKING STRIPES (SEE CIVIL DRAWING IF STRIPES ARE NOT PAINTED).

11) ALL PIPE UNDER A.C. PAVEMENT SHALL BE 1120/SCHEDULE 40 PVC PIPE, 24" INCH COVER, WITH A SAND BLANKET AROUND PIPE AND A MINIMUM OF 6" INCH SAND COVER ON TOP SIDE OF PIPE.

12) ALL VALVE CONTROL WIRE SHALL BE A WG 14 TYPE UF, 600 VOLT TEST DIRECT BURIAL. CONNECT WIRE USING PEN-TITE WIRE CONNECTORS WITH EPOXY RESIN OR EQUAL. RUN ONE EXTRA WIRE TO ALL VALVE LOCATIONS. VALVE STATION NUMBER AND AREA BEING WATERED SHOULD BE IDENTICAL TO PLANS. STRAP VALVE CONTROL WIRES TO SUPPLY LINE AT 10' (FT)CENTERS W/TAPE OR PLASTIC TIES.

13) ADJUST ALL SPRINKLER HEADS FOR COMPLETE COVERAGE WITH MINIMUM SPRAY ON SIDEWALKS, ETC AND THROTTLE FLOW CONTROL AT VALVE FOR OPTIMUM OPERATION.

14) AT JOB COMPLETION, SUPPLY OWNER WITH TWO(2) SETS OF MATCHING Q.C.V. KEYS AND HOSE SWIVELS (33DK-S-H-O).AND TWO (2) CONTROLLER BOX KEYS.

15) IRRIGATION CONTRACTOR SHALL SUBMIT "AS BUILT" DRAWINGS TO THE OWNER PRIOR TO FINAL ACCEPTANCE AND FINAL PAYMENT.

16) THE IRRIGATION CONTRACTOR SHALL GUARANTEE THE IRRIGATION SYSTEM AGAINST DEFECTIVE MATERIALS AND WORKMANSHIP FOR A PERIOD OF ONE (1) YEAR FROM THE DATE OF FINAL ACCEPTANCE.

17) ALL ANNUAL COLOR AREAS SHALL BE IRRIGATED WITH SEPERATE IRRIGATION VALVE. REFER TO PLANTING AND IRRIGATION PLAN FOR LOCATIONS.

18) WRITE VALVE STATION NUMBER AND AREA BEING WATERED ON CHART INSIDE CONTROLLER VALVE STATION NUMBER AND AREA BEIGN WATERED SHOULD BE IDENTICAL TO PLANS.

19) LANDSCAPE CONTRACTOR SHALL VERIFY STATIC PRESSURE AND GPM DEMAND NOTED IN NOTE #1 PRIOR TO INSTALLATION OF IRRIGATION SYSTEM. IN DISCREPANCY OCCURS NOTIFY KIRK MORTON @ (510) 792-9193 IMMEDIATELY BEFORE COMMENCING INSTALLATION.

20) ALL WORK SHALL BE COMPLETED IN ACCORDANCE WITH THE LATEST ADITIONS OF THE UNIFORM BUILDING CODE, NATIONAL ELECTRICAL CODE, UNIFORM PLUMBING CODE AND ALL STATE AND LOCAL CODES AND ORDINANCES WHICH APPLY. THE CONTRACTOR SHALL CHECK ALL PLANS SUPPLIED FROM THE PROJECT. VERIFY JOBSITE CONDITIONS AND IMMEDIATELY NOTIFY KIRK MORTON OF ANY DISCREPANCIES FOUND. SHOULD IT APPEAR THAT THE WORK TO BE DONE, OR ANY OTHER MATTER RELATIVE THERETO, IS NOT SUFFICIENTLY DETAILED OR EXPLAINED ON THESE PLANS, THE CONTRACTOR SHALL CONTACT KIRK MORTON @ (510) 792-9193 FOR FURTHER CLARIFICAITON AS MAY BE NECESSARY

21) WATER APPLICATION RATES:
A. SHALL BE LESS THAN .25" INCHES PER CYCLE
B. A MINIMUM OF A ONE (1) HOUR PERIOD SHALL BE ALLOWED PRIOR TO THE APPLICATION OF ADDITIONAL WATER

12) NO SPRAY OR RUNOFF ONTO PAVED OR STREET AREAS.

23) CHECK VALVES INSTALLED TO PREVENT LOW HEAD DRAINAGE

24) NO WATERING OF BARE GROUND

25) CONTROLLER TO SET BETWEEN SUNSET AND SUNRISE

IRRIGATION MAINTENANCE

A MONTHLY INSPECTION SHALL BE DONE TO INSURE IRRIGATION EFFICIENCY. THE FOLLOWING ITEMS SHALL BE INSPECTED AND REPAIRED AS NECESSARY.

1) CHANGE THE AUTOMATIC CONTROLLER PROGRAM IN ACCORDANCE TO WATERING SCHEDULE AND SEASON. SLIGHT ADJUSTMENTS WILL BE NECESSARY DUE TO WEATHER CONDITIONS. ADJUST ACCORDINGLY.

2) AUTOMATIC CONTROLLER SHALL BE PROGRAMMED TO OPERATE BETWEEN THE HOURS OF 2:00 AM AND 7:00 AM.

3) ALL REMOTE CONTROL VALVES SHALL BE TESTED FOR PROPER OPERATION. FLOW CONTROL VALVE SHALL BE THROTTLED DOWN TO INSURE AN APPROXIMATE 5 SECOND SHUTDOWN TIME AFTER CONTROL VALVE IS TURNED OFF.

4) ALL SPRINKLER NOZZLES AND BODIES SHALL BE ADJUSTED AND REPAIRED AS NECESSARY TO INSURE PROPER OPERATION.

5) ALL IRRIGATION REPAIRS SHALL BE DONE WITH ORIGINALLY SPECIFIED MATERIALS. SEE SHEET L-1 FOR MANUFACTURER AND SPECIFICATIONS.

6) SLIGHT PRUNING/THINNING OF SHRUBS AND TREES MAY BE NECESSARY TO INSURE PROPER THROW OF SPRINKLER NOZZLES.

7) BACKFLOW PREVENTION DEVICE SHALL BE TESTED ONCE PER YEAR BY CERTIFIED TESTER LICENSED BY THE STATE OF CALIFORNIA. REPAIR IF NECESSARY. COPY OF REPORT SHALL BE SENT TO APPROPRIATE REPRESENTATIVE.

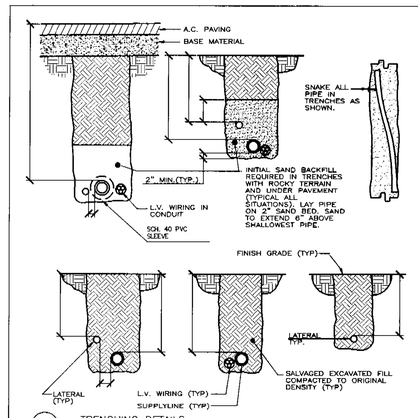

TRENCHING DETAILS
NTS

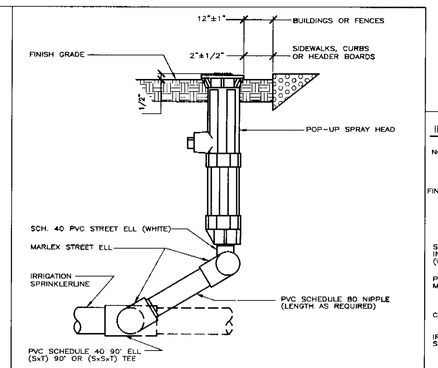

4",6" & 12" POP-UP SPRAY HEAD RISER ASSEMBLY DETAIL
NTS

INSTALL IN SHRUB AREA ONLY

NOTE: SET TOP OF BOX 2" ABOVE FINISH GRADE IN SHRUB AREAS.

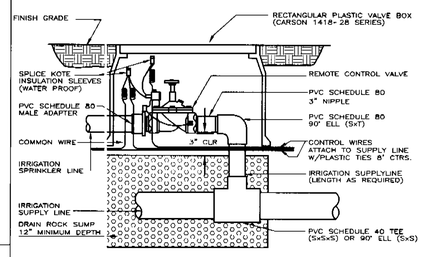

REMOTE CONTROL VALVE INSTALLATION DETAIL
NTS

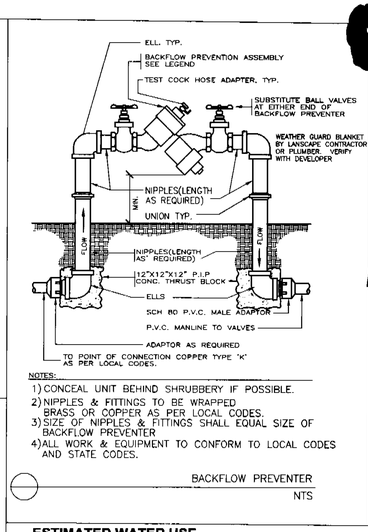

NOTES:
1) CONCEAL UNIT BEHIND SHRUBBERY IF POSSIBLE.
2) NIPPLES & FITTINGS TO BE WRAPPED BRASS OR COPPER AS PER LOCAL CODES.
3) SIZE OF NIPPLES & FITTINGS SHALL EQUAL SIZE OF BACKFLOW PREVENTER
4) ALL WORK & EQUIPMENT TO CONFORM TO LOCAL CODES AND STATE CODES.

BACKFLOW PREVENTER
NTS

NOTE: CONTROLLER SHALL BE PROPERLY GROUNDED PER ARTICLE 280 OF THE NATIONAL ELECTRIC CODE AND CONFORM TO LOCAL REGULATIONS.

NOTE: TOP OF WALL CLOCK NOT TO EXCEED 5' BOTTOM OF WALL CLOCK SHALL BE MIN. 3' ABOVE FINISH GRADE INSTALL PER MANUFACTURER SPECIFICATIONS.

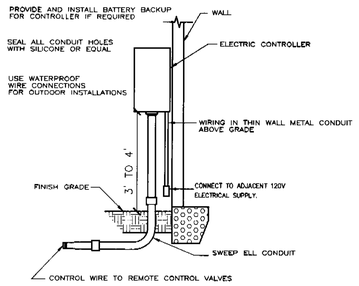

WALL MOUNT CONTROLLER INSTALLATION DETAIL
NTS

INSTALL IN SHRUB AREA ONLY

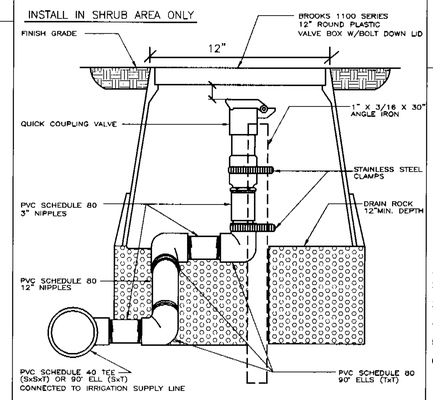

QUICK COUPLING VALVE RISER ASSEMBLY DETAIL
NTS

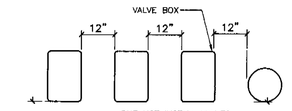

1. CENTER VALVE BOX OVER REMOTE CONTROL VALVE TO FACILITATE SERVICING VALVE.
2. SET BOXES 1"-2" ABOVE FINISH GRADE IN GROUND COVER/SHRUB AREA AND FLUSH WITH FINISH GRADE IN TURF AREA.
3. SET RCV AND VALVE BOX ASSEMBLY IN GROUND COVER/SHRUB AREA WHERE POSSIBLE. INSTALL IN LAWN ONLY IF GROUND COVER DOES NOT EXIST ADJACENT TO LAWN.
4. SET BOXES PARALLEL TO EACH OTHER AND PERPENDICULAR TO EDGE OF LAWN, WALK, CURB, FENCE, BUILDING, ETC.
5. AVOID HEAVILY COMPACTING SOIL AROUND VALVE BOXES TO PREVENT COLLAPSE AND DEFORMATION OF VALVE BOX SIDES.
6. INSTALL EXTENSION BY VALVE BOX MANUFACTURER AS REQUIRED TO COMPLETELY ENCLOSE ASSEMBLY FOR EASY ACCESS.

VALVE BOX INSTALLATION TOP VIEW
NTS

ESTIMATED WATER USE

VALVE #		ITO	PF	HA-SQ.FT.	0.62	100% TOTAL	R	TOTAL GPY
LAWN SPRAY	V#1	45.5	0.8	228	0.62	5146	0.64	8045
LAWN ROTOR		45.5	0.8	0	0.62	0	0.74	0
SL SPRAY	V#2-12	45.5	0.2	4,319	0.62	24368	0.64	38075
SL NARROW		45.5	0.2	0	0.62	0	0.51	0
SL ROTOR	V#21	45.5	0.2	661	0.62	3729	0.74	5040
SM SPRAY	V#13,16-17	45.5	0.4	424	0.62	4784	0.64	7476
SM NARROW	V#18-19	45.5	0.4	699	0.62	7888	0.51	15466
SM BUBBLER	V#14-15	45.5	0.4	97	0.62	1095	0.9	1216
SH BUBBLER	V#22	45.5	0.8	30	0.62	677	0.64	1058
SH NARROW		45.5	0.8	0	0.62	0	0.51	0
SH ROTOR		45.5	0.8	0	0.62	0	0.74	0
TOTAL GPY								76370
TOTAL SQ.FT				6458				

WATERING SCHEDULE

VALVE (STATION #)						1	2	3	4	5	6
PLANT TYPE						LAWN	SL	SL	SL	SL	SL
IRRIGATION TYPE						SPRAY	SPRAY	SPRAY	SPRAY	SPRAY	SPRAY
FLOW RATE (GMP)						8	10	9	10	12	12
VALVE AREA COVERED (SQ. FT.)						228	311	399	318	359	382
PRECIPITATION RATE, IN/HR						3.38	3.10	2.17	3.03	3.22	3.03
PRECIPITATION RATE, IN/MIN						0.06	0.05	0.04	0.05	0.05	0.05
MONTH	EST. MO. ET	ANN IW	IRR DAYS PER WK	CYCLES PER DAY	CYCLES PER WK	MINUTES OF RUN TIME, PER CYCLE					
JAN	1.6	0.34	2	1	2	3.0	1.1	1.6	1.1	1.0	1.1
FEB	1.8	0.46	2	1	2	4.0	1.4	2.1	1.5	1.4	1.5
MAR	3.1	0.70	3	1	3	4.2	1.5	2.1	1.5	1.4	1.5
APR	4.1	0.96	3	2	6	2.8	1.0	1.4	1.0	1.0	1.0
MAY	5.5	1.25	3	2	6	3.7	1.3	1.9	1.4	1.3	1.4
JUN	6.8	1.36	3	3	9	2.7	1.0	1.4	1.0	0.9	1.0
JUL	6.5	1.48	3	3	9	2.9	1.0	1.5	1.1	1.0	1.1
AUG	5.9	1.34	3	3	9	2.6	1.0	1.4	1.0	0.9	1.0
SEP	5.2	1.21	3	2	6	3.6	1.3	1.8	1.3	1.2	1.3
OCT	3.3	0.75	3	1	3	4.4	1.6	2.3	1.6	1.5	1.6
NOV	1.8	0.42	2	1	2	3.7	1.3	1.9	1.4	1.3	1.4
DEC	1	0.23	2	1	2	2.0	0.7	1.0	0.7	0.7	0.7
TOTALS	46.6					MINUTES OF RUN TIME, PER YEAR					
					TOTALS	807.94	290.94	414.74	297.49	279.87	297.81
					GALLONS PER YEAR	6,463.55	2,909.45	3,732.70	2,974.93	3,358.50	3,573.66
					TOTAL GALLONS PER YEAR	71448.04					

VALVE (STATION #)	7	8	9	10	11	12	13	14	15	16	17	18
PLANT TYPE	SL	SL	SL	SL	SL	SL	SM	SM	SM	SM	SM	SM
IRRIGATION TYPE	SPRAY	SPRAY	SPRAY	SPRAY	SPRAY	SPRAY	SPRAY	BUBBLER	BUBBLER	SPRAY	SPRAY	SPRAY N
FLOW RATE (GMP)	10	10	7	12	12	8	4	12	13	8	5	11
VALVE AREA COVERED (SQ. FT.)	665	548	225	466	433	213	148	43	54	174	102	429
PRECIPITATION RATE, IN/HR	1.45	1.76	3.00	2.48	2.67	3.62	2.60	26.87	23.18	4.43	4.72	2.47
PRECIPITATION RATE, IN/MIN	0.02	0.03	0.05	0.04	0.04	0.06	0.04	0.45	0.39	0.07	0.08	0.04
MONTH	MINUTES OF RUN TIME, PER CYCLE											
JAN	2.3	1.9	1.1	1.4	1.3	0.9	2.0	0.2	0.2	1.2	1.1	2.1
FEB	3.1	2.5	1.5	1.8	1.7	1.2	2.6	0.3	0.3	1.5	1.4	2.7
MAR	3.2	2.6	1.6	1.9	1.7	1.3	2.7	0.3	0.3	1.6	1.5	2.9
APR	2.2	1.8	1.1	1.3	1.2	0.9	1.8	0.2	0.2	1.1	1.0	1.9
MAY	2.8	2.3	1.4	1.7	1.5	1.1	2.4	0.2	0.3	1.4	1.3	2.5
JUN	2.0	1.7	1.0	1.2	1.1	0.8	1.7	0.2	0.2	1.0	1.0	1.8
JUL	2.2	1.8	1.1	1.3	1.2	0.9	1.9	0.2	0.2	1.1	1.0	2.0
AUG	2.0	1.7	1.0	1.2	1.1	0.8	1.7	0.2	0.2	1.0	0.9	1.8
SEP	2.8	2.3	1.3	1.6	1.5	1.1	2.3	0.2	0.3	1.4	1.3	2.4
OCT	3.4	2.8	1.7	2.0	1.9	1.4	2.9	0.3	0.3	1.7	1.6	3.0
NOV	2.9	2.4	1.4	1.7	1.6	1.1	2.4	0.2	0.3	1.4	1.3	2.5
DEC	1.6	1.3	0.8	0.9	0.8	0.6	1.3	0.1	0.1	0.8	0.7	1.4
TOTALS	MINUTES OF RUN TIME, PER YEAR											
TOTALS	622.12	512.66	300.70	363.29	337.56	249.08	524.45	50.79	58.88	308.29	289.16	552.80
GALLONS PER YEAR	6,221.17	5,126.62	2,104.91	4,359.50	4,050.78	1,992.64	2,097.82	609.50	765.42	2,466.36	1,445.79	6,080.84

VALVE (STATION #)	19	20	21	22
PLANT TYPE	SM	SL	SL	COLOR
IRRIGATION TYPE	SPRAY N	BUBBLER	ROTOR	BUBBLER
FLOW RATE (GMP)	12	27	12	9
VALVE AREA COVERED (SQ. FT.)	270	27	661	30
PRECIPITATION RATE, IN/HR	4.28	10.70	1.75	28.89
PRECIPITATION RATE, IN/MIN	0.07	0.18	0.03	0.48
MONTH	MINUTES OF RUN TIME, PER CYCLE			
JAN	1.2	0.3	1.9	0.4
FEB	1.6	0.4	2.5	0.5
MAR	1.6	0.4	2.7	0.5
APR	1.1	0.3	1.8	0.3
MAY	1.5	0.4	2.4	0.4
JUN	1.1	0.3	1.7	0.3
JUL	1.2	0.3	1.9	0.3
AUG	1.0	0.3	1.7	0.3
SEP	1.4	0.4	2.3	0.4
OCT	1.8	0.5	2.8	0.5
NOV	1.5	0.4	2.4	0.4
DEC	0.8	0.2	1.3	0.2
TOTALS	MINUTES OF RUN TIME, PER YEAR			
TOTALS	318.93	84.20	515.31	94.50
GALLONS PER YEAR	3,827.10	252.59	6,183.75	850.47

PLANT ESTABLISHMENT PERIOD WATERING SCHEDULE

FOR PLANT ESTABLISHMENT PERIOD, PROGRAM CONTROLLER AS SPECIFIED ABOVE & SET PERCENTAGE CONTROLL SWITCH TO 200% FOR APPROXIMATELY 6 MONTHS OR AS NECESSARY.

DATE: 3-13-1-06

IRRIGATION_DETAILS

NOT_TO_SCALE

MORTON
LANDSCAPE DESIGN CONSULTANT
792-9193
510
KIRK
37350 N-ES BLVD.
FREMONT, CA 94536

ALL AMERICAN FOOD

Harman Management, Inc.
199 First Street, Suite 212
Los Altos, CA 94022
650-941-5681

Vincent+Murphy Incorporated
837 Fifth Avenue
San Rafael, Ca. 94901
(415) 451-2500
FAX 451-2595

JOB NUMBER
H0510

SHEET TITLE
IRRIGATION DETAILS

ADDRESS:
3144 S. BASCOM AVENUE
SAN JOSE, CA. 95124-2022
APN#414-14-075 & 076

RECORD DATES

DATE	DESCRIPTION
07/26/05	DESIGN REVIEW SUBMITTAL

REVISIONS

NO.	DATE	DESCRIPTION
△		
△		
△		
△		
△		
△		

DATE
07/26/05

BUILDING TYPE
KAW_MAPS II

PROTOTYPE ISSUE DATE
2005

STORE NAME
JIM & JASMINE #Z38

SHEET NUMBER
L-1.1

W:\Data\harman\2005\H0510_sch jose_bascom\03_cd_current\015_KA_H04-L.1.1.dwg modified by Dhanagan at Jun 26, 2006 - 3:27pm

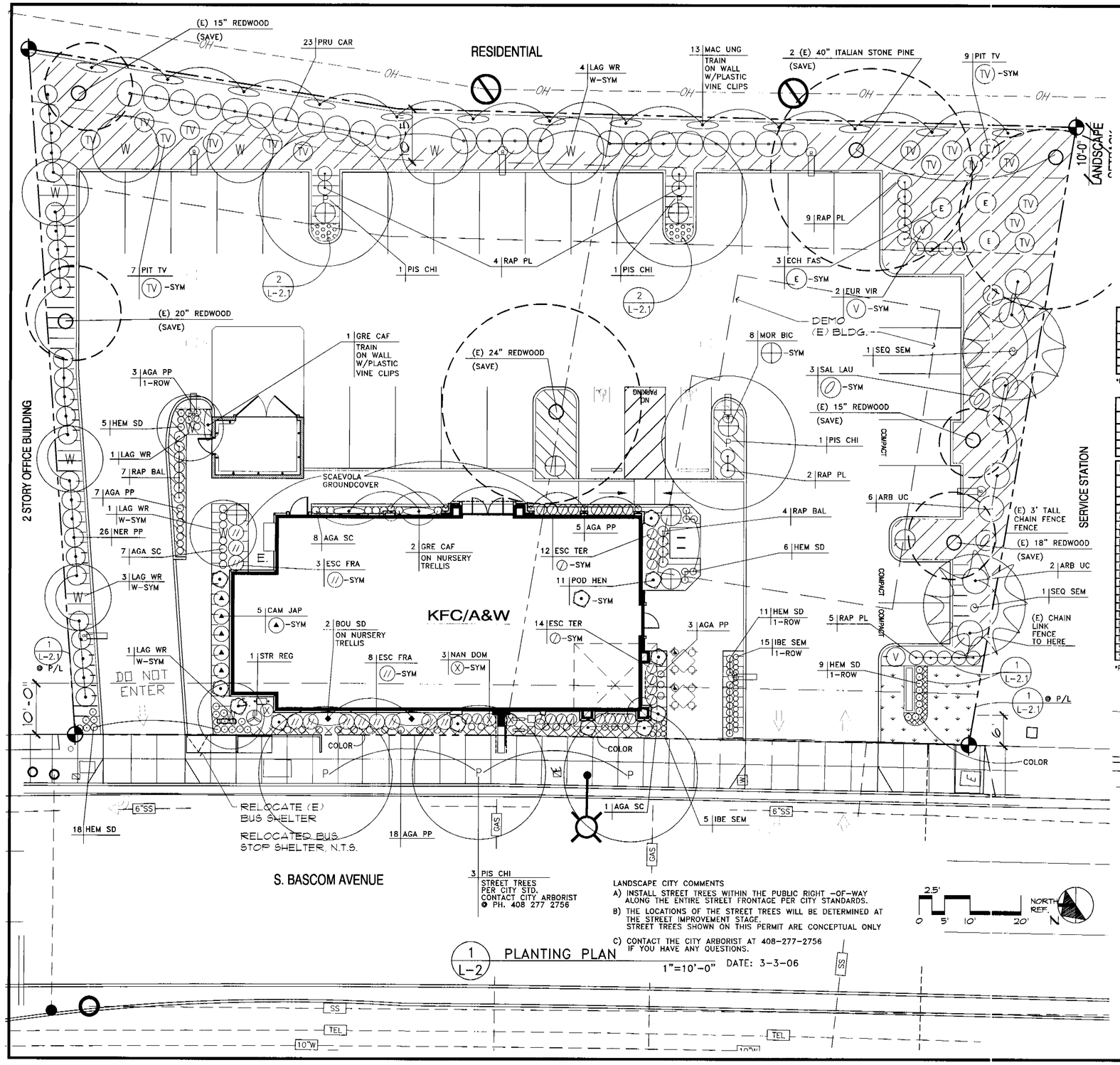

LANDSCAPE CITY COMMENTS

A) INSTALL STREET TREES WITHIN THE PUBLIC RIGHT -OF-WAY ALONG THE ENTIRE STREET FRONTAGE PER CITY STANDARDS.

B) THE LOCATIONS OF THE STREET TREES WILL BE DETERMINED AT THE STREET IMPROVEMENT STAGE. STREET TREES SHOWN ON THIS PERMIT ARE CONCEPTUAL ONLY

C) CONTACT THE CITY ARBORIST AT 408-277-2756 IF YOU HAVE ANY QUESTIONS.

1 / L-2 PLANTING PLAN 1"=10'-0" DATE: 3-3-06

SCAEVOLA 'MAUVE CLUSTER'
1 GALLON CANS @ 18" CENTERS

MYOPORUM PARVIFOLIUM -- 'PINK'
1 GALLON CANS @ 3' CENTERS

PACIFIC SOD-MEDALLION

ANNUAL COLOR – PER SEASON/PER EXPOSURE
4" POTS @ 6" CTRS.

GAZANIA – MITSUWA YELLOW
ROOTED CUTTINGS FROM FLATS @ 9" CTRS.

TREE LEGEND

ABBR.	BOTANICAL NAME	COMMON NAME	QUANT.*	SIZE
LAG WR	LAEGERSTROEMIA INDICA 'WATERMELLON RED'	RED CRAPEMYRTLE	10	24"box
PIS CHI	PISTACIO CHINENSIS	CHINESE PISTACHE	3	24"box
SEQ SEM	SEQUOIA SEMPERVIRENS	COAST REDWOOD	2	24"box
PIS CHI	PISTACIO CHINENSIS	CHINESE PISTACHE	3	24"box
	(STREET TREES) PER CITY STD.			

*PLANT QUANTITIES ARE APPROXIMATE, SEE PLAN FOR ACTUAL COUNTS

VINE LEGEND

ABBR.	BOTANICAL NAME	COMMON NAME	QUANT.	SIZE
MAC UNG	MACFADYENA UNGUIS-CATI	YELOW CAT'S CLAW	13	5gal
	(ON NURSERY TRELLIS)			
BOU SD	BOUGAINVILLEA 'SAN DIEGO RED'	RED BOUGAINVILLEA	2	5gal
	(TRAIN ON NURSERY TRELLIS)			

PLANT LIST

ABBR.	BOTANICAL NAME	COMMON NAME	QUANT.*	SIZE
AGA PP	AGAPANTHUS 'PETER PAN'	DWARF LILY OF THE NILE	36	1gal
AGA SC	AGAPANTHUS 'STORM CLOUD'	'STORM CLOUD' LILY OF THE NILE	16	1gal
ARB UC	ARBUTUS UNEDO COMPACTA	DWARF STRAWBERRY SHRUB	8	5gal
CAM JAP	CAMILLIA JAPONICA	CAMILLIA	5	5gal
GRE CAF	GREWIA CAEFRA	LAVENDER STAR FLOWER	3	5gal
ECH FAS	ECHIUM FASTIOCUM	PRIDE OF MADEREA	3	5gal
ESC FRA	ESCALLONIA 'FRADESII'	FRADESII ESCALLONIA	11	5gal
ESC TER	ESCALLONIA 'TERRI'	TERRI ESCALLONIA	26	5gal
EUR VIR	EURYOPS 'VIRIDIS'	GREEN LEAF EURYOPS	2	5gal
HEM SD	HEMEROCALLIS 'STELLA D 'ORO'	EVERGREEN DAY LILY	49	1gal
IBE SEM	IBERIS SEMPERVIRONS 'SNOWFLAKE'	CANDY TUFT	20	1gal
MOR BIC	MORRAEA BICOLOR	YELLOW FORTNIGHT LILY	8	5gal
NAN DOM	NANDINA DOMESTICA	HEAVENLY BAMBOO	3	5gal
NER PP	NERIUM OLEANDER 'PETITE PINK'	PETITE PINK OLEANDER	26	5gal
PIT TV	PITTOSPORUM TOBIRA 'VARIEGATA'	VARAGATED MOCK ORANGE	16	5gal
POD HEN	PODOCARPUS 'HENKELII'	LONG-LEAFED YELLOW-WOOD	11	5gal
PRU CAR	PRUNUS CAROLINIANA	CAROLINA LAUREL CHERRY	23	5gal
RAP BAL	RAPHIOLEPIS 'BALLERINA'	BALLERINA HAWTHORN	11	5gal
RAP PL	RAPHIOLEPIS 'PINK LADY'	PINK LADY HAWTHORN	20	5gal
SAL LEU	SALVIA LEUCANTHA	MEXICAN SAGE	3	5gal
STR REG	STRELITZIA REGINAE	BIRD OF PARADISE	1	5gal

*PLANT QUANTITIES ARE APPROXIMATE, SEE PLAN FOR ACTUAL COUNTS

DATE: 3-13-06

PLANTING PLAN

SCALE: 1"=10'-0"

MORTON
LANDSCAPE DESIGN
IRRIGATION CONSULTANT
510 792-9193

KIRK
1000 MISSILES BLVD.
FREMONT, CA 94536

ALL AMERICAN POOL

Herman Management, Inc.
199 First Street, Suite 212
Los Altos, CA 94022
650-941-5681

Vincent+Murphy
Incorporated

637 Fifth Avenue
San Rafael, Ca. 94901
(415) 451-2500
FAX 451-2595

JOB NUMBER
H0510

SHEET TITLE
PLANTING PLAN

ADDRESS:
3144 S. BASCOM AVENUE
SAN JOSE, CA. 95124-2022
APN# 414-14-075 & 076

RECORD DATES

DATE	DESCRIPTION
07/26/05	DESIGN REVIEW SUBMITTAL
	-
	-
	-

REVISIONS

NO.	DATE	DESCRIPTION
△		
△		
△		
△		
△		
△		

DATE
07/26/05

BUILDING TYPE
KAW_MAPS II

PROTOTYPE ISSUE DATE
2005

STORE NAME
JIM & JASMINE #738

SHEET NUMBER
L-2

GENERAL NOTES – 90 DAY MAINTENANCE

1) TOPSOIL TO BE SCARIFIED TO A DEPTH OF 8"(INCHES).
2) INCORPORATE SOIL AMENDMENTS THROUGHLY INTO TOPSOIL (MIN.8" DEEP) NITROGEN TREATED REDWOOD SAWDUST:6 CU. YDS. PER 1,000 SQ.FT (2" INCH THICK LAYER MINIMUM)
3) RAKE, BREAK-UP CLODS AND FINE GRADE TO PROVIDE UNIFORM SMOOTHNESS AND POSITIVE SURFACE DRAINAGE. FINISHED GRADE 1"BELOW TOP-OF-CURB, PAVE, ETC.
4) TREE AND SHRUB PITS: 12"WIDER AND 6" DEEPER THAN ROOT BALL BACKFILL:70% NATIVE SOIL MIXED WITH 30% SOIL AMENDMENT MIX. SOIL AMENDMENT MIX PER SPECIFICATION SEE NOTE #2 ABOVE
5) DOUBLE STAKE TREES: 2"I x 10' LONG TREATED LODGEPOLE PINE TREE AT AKES (2-PER-TREE). SECURE WITH RUBBER TREE TIES (4PER TREE) SECURE TO STAKE WITH GALVANIZED ROOFING NAIL TO PREVENT SLIPPAGE USE STRAIGHT GROWTH TREE TIES 20" LENGHT OR APPROVED EQUAL (SEE DETAIL SH.L-2.1)
6) FORM WATER BASINS AROUND TREES AND SHRUBS (SEE DETAIL SH.L-2.1
7) FIRBARK MULCH ALL PLANTED AREAS W/A MINIMUM 3" (INCHES) THICK LAYER FIRBARK MULCH. USE MEDIUM SIZE DECO BARK MULCH.
8) MAINTENANCE 90 DAYS AFTER FINAL ACEPTANCE BY OWNER/REPRESENTATIVE.
9) PLANT AND PLANTING GUARANTEE: GROUNDCOVER. ONE (1) YEAR, SHRUBS-ONE (1) YEAR, TREES-ON (1) YEAR.
10) ALL PLANTED AREAS SHALL BE KEPT WEED FREE DURING 90 DAY MAINTENANCE PERIOD.
11) ALL ANNUAL COLOR FLOWER BEDS SHALL HAVE THE TOP 8" (INCHES) OF SOIL REMOVED AND REPLACED WITH 50% SANDY LOAM MIX & 50% NATIVE SOIL. ROTOTILLED TOGETHER.
12) ALL ANNUAL COLOR AREAS SHALL BE REPLACED EVERY 90-100 DAYS.
13) HDR-DENOTES HEADER BOARD (SEE DETAIL SH.L-2.1)
14) VISQUEEN, SHEET PLASTIC AND OTHER NON-POROUS MATERIAL SHALL NOT BE PLACED UNDER THE MULCH.
15) NO PLANT SUBSTITUTIONS ALLOWED UNLESS AUTHORIZED BY LANDSCAPE DESIGNER.
16) ALIGN TREES WITH PAINTED PARKING STRIPES WHERE APPLICABLE.
17) LANDSCAPE CONTRACTOR TO NOTIFY LANDSCAPE DESIGNER ONE(1) WEEK PRIOR TO COMPLETION IN ORDER TO SCHEDULE LANDSCAPE AND IRRIGATION INSPECTION
18) APPLY PRE-EMERGENT WEED KILLER PRIOR TO INSTALLATION OF FIRBARK MULCH IN ALL SHRUB AREAS. INSTALL IN ACCORDANCE WITH ALL STATE AND LOCAL CODES AND MANUFACTURES INSTRUCTIONS.
19) ALL LAWN AREAS SHALL HAVE ROCKS 2" INCHES OR GREATER IN DIAMETER REMOVED.
20) ALL LAWN AREAS SHALL BE MOWED ONCE A WEEK DURING 90 DAY MAINTENANCE PERIOD.
21) ALL TREES PLANTED IN LAWN AREAS SHALL HAVE AN 18"DIAMETER AREA, FREE OF LAWN, AROUND TREE TRUNK.
22) ALL PODOCARPUS MACROPHYLLUS, DODONEAB, PRUNUS SHRUBS SHALL BE SINGLE STAKED WITH 1-2" LODGEPOLE PINE STAKE & 2-RUBBER TREE TIES(SEE TREE STAKING DETAIL).
23) (E)-DENOTES EXISTING.
24) (N)-DENOTES NEW.
25) (TYP)-DENOTES TYPICAL
26) (D.S.)-DENOTES DIRECTION SIGN

GENERAL LANDSCAPE MAINTENANCE

1) ALL LANDSCAPE AREAS SHALL BE KEPT WEED FREE BY EITHER HAND PULLING OR A COMBINATION OF POST EMERGENT & PRE EMERGENT HERBICIDES POST EMERGENT- ROUND UP, PREEMERGENT-CHIPCO RONSTAR/SURFLAN, OR APPROVED EQUAL
2) ALL LAWN AREAS SHALL BE MOWED ONCE A WEEK DURING GROWING SEASON.
3) FERTILIZING SHALL BE DONE AS FOLLOWS: ALL PLANTING AREAS ONCE A YEAR. ALL LAWN AREAS TWICE A YEAR
4) AERATING AND DETHATCHING AS NECESSARY TO PROVIDE OPTIMUM GROWING ENVIRONMENT. MOW ALL LAWNS AT A MINIMUM 2" INCH HEIGHT.
5) REPLACE ALL ANNUAL COLOR AREAS EVERY 90-120 DAYS AS NECESSARY. 4" INCH POTS @ 6"INCHES ON CENTER
6) PRUNE ALL DECIDUOUS TREES AND SHRUBS DURING DORMANT SEASON. PRUNE AND THIN ALL EVERGREEN TREES AND SHRUBS DURING GROWING SEASON.
7) PRUNING AND THINNING OF TREES SHALL BE DONE BY CUTTING SELECTIVE BRANCHES AND NOT TOPPING OR SHEARING THE TREE
8) KEEP GROUNDCOVER 6" INCHES AWAY FROM ALL SHRUBS AND TREE TRUNKS BY HAND PULLING OR APPLICATION OF ROUND UP.
9) ALL HERBICIDES SHALL BE MIXED AND APPLIED IN ACCORDANCE TO MANUFACTURERS INSTRUCTIONS AND GUIDELINES.
10) ALL HERBICIDES SHALL BE APPLIED IN ACCORDANCE TO ALL STATE AND LOCAL CODES.
11) FERTILIZE IN FALL AND SPRING WITH A BALANCED FERTILIZER SUCH AS 16-16-IN ACCORDANCE WITH MANUFACTURERS INSTRUCTIONS.
12) ALL TREES IN LAWN AREA SHALL HAVE AN 18" INCH DIAMETER AREA TREE OF LAWN AROUND TREE TRUNKS. SPRAY POST EMERGENT HERBICIDE OR HAND PULL

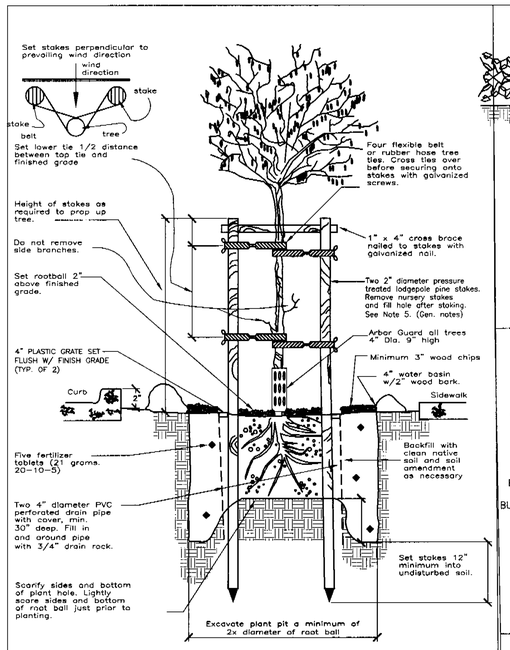

TREE PIT/STAKING DETAIL
NTS

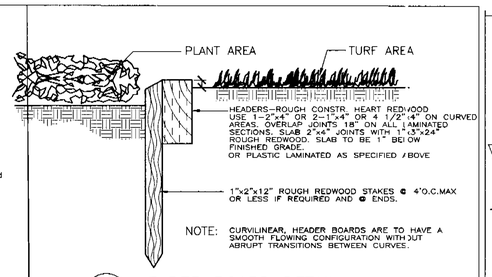

1 L-2.1 HEADER BOARD DETAIL
NTS

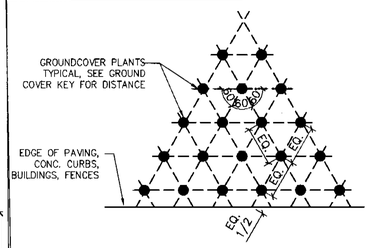

GROUNDCOVER SPACING
NTS

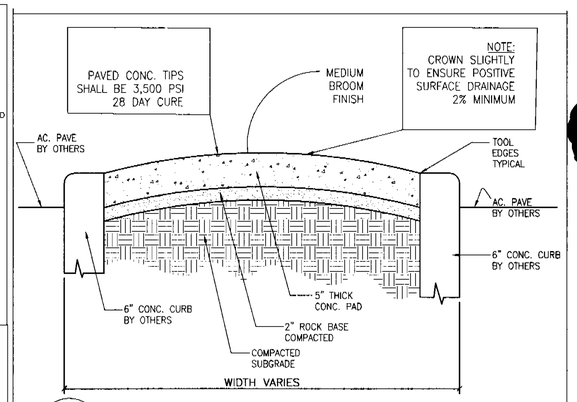

2 L-2.1 CONC. PAVED TIPS
NTS

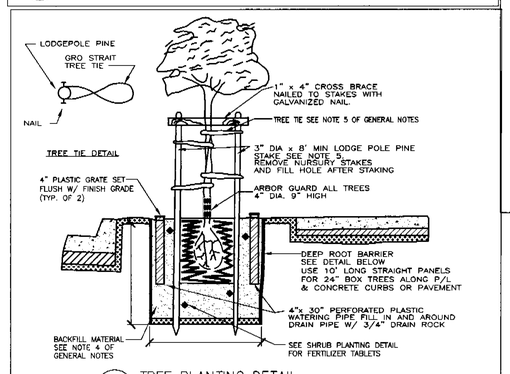

TREE PLANTING DETAIL
NTS

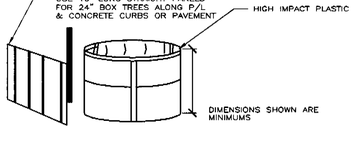

TREE PLANTING W/DEEP ROOT BARRIER
FOR ALL TREES WITHIN 8' OF PAVING, CONC. CURBS & BUILDING FOUNDATIONS
NTS

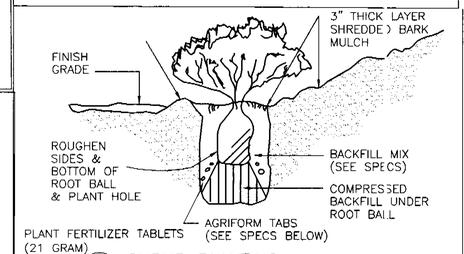

SHRUB PLANTING
FOR SLOPES GREATER THAN 2:1
NTS

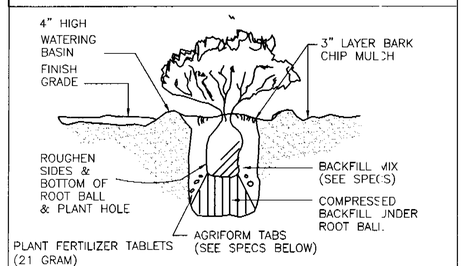

SHRUB PLANTING
FOR SLOPES LESS THAN 2:1
NTS

DATE: 3-13-06

PLANTING_DETAILS

NOT_TO_SCALE

KIRK MORTON
LANDSCAPE DESIGN IRRIGATION CONSULTANT
510 792-9183
43255 MISSIONES BLVD.
FREMONT, CA 94536

Harman Management, Inc.
199 First Street, Suite 212
Los Altos, CA 94022
650-941-5881

Vincent+Murphy Incorporated
637 Fifth Avenue
San Rafael, Ca. 94901
(415) 451-2500
FAX 451-2595

JO NUMBER
H0510

SHEET TITLE: PLANTING DETAILS

ADDRESS:
3144 S. BASCOM AVENUE
SAN JOSE, CA. 95124-2022
APN#414-14-075 & 076

RECORD DATES

DATE	DESCRIPTION
07/26/05	DESIGN REVIEW SUBMITTAL

REVISIONS

NO.	DATE	DESCRIPTION

DATE 07/26/05
BUILDING TYPE KAW_MAPS II
PROTOTYPE ISSUE DATE 2005
STORE NAME JIM & JASMINE #238
SHEET NUMBER L-2.1

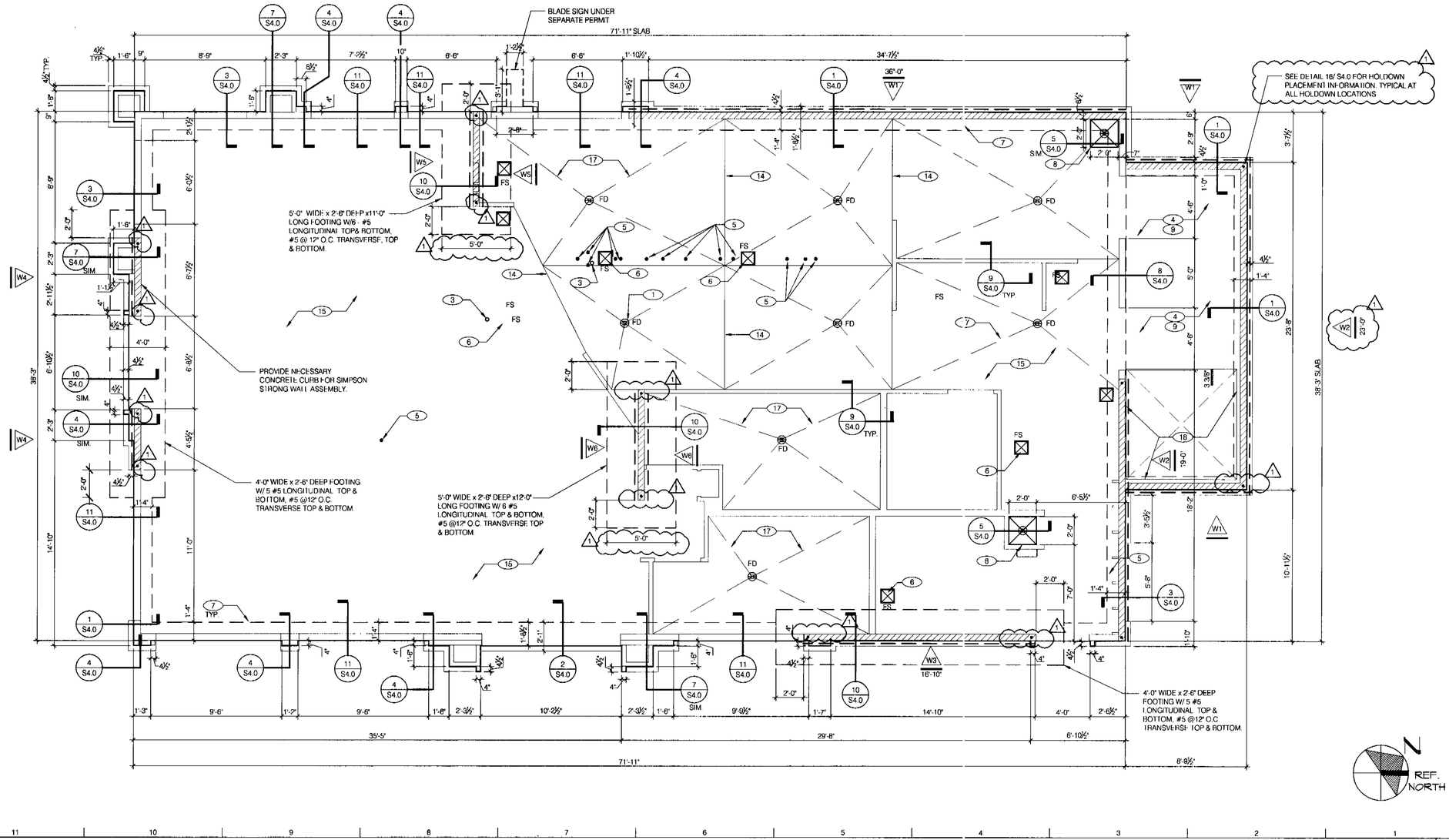

FOUNDATION PLAN 1/4"=1'-0" **A**

WIND SPEED: 80 MPH / EXPOSURE 'C'

EARTHQUAKE ZONE: 4

ROOF LIVE LOAD: 30 P.S.F.

DESIGN CRITERIA **F**

MISCELLANEOUS:

A. DIMENSIONS NOTED ARE TO FACE OF CONCRETE. REFER TO DWG. A1.0 FOR DIMENSIONS TO FACE OF STUD AND OTHER DIMENSIONS NOT OTHERWISE NOTED.
B. DRAWINGS SHALL NOT BE SCALED. ALL DIMENSIONS AND FIT SHALL BE DETERMINED AND VERIFIED BY THE CONTRACTOR PRIOR TO COMMENCEMENT OF WORK.
C. DETAILS NOT FULLY OR SPECIFICALLY SHOWN SHALL BE OF SAME NATURE AS OTHER SIMILAR CONDITIONS.
D. SEE PLUMB. DWGS. FOR PLUMB. LAYOUT DIMENSIONS, U.N.O.
F. SEE ELECT. DWGS. FOR ELECT. LAYOUT DIMENSIONS, U.N.O.
F. COORD. FOUNDATION AND SLAB LAYOUT WITH OTHER TRADES PRIOR TO POURING SLAB.
G. SEE DRAWING S2.0 FOR SHEAR WALL INFORMATION.

SOILS:

A. ALL SOILS WORK SHALL BE DONE IN ACCORDANCE WITH THE SPECS. AND THE GEOTECHNICAL REPORT NOTED BELOW. ALL FOUNDATIONS SHALL BEAR ON FIRM, UNDISTURBED, NATIVE SOILS OR ENGINEERED FILL AT OR EXCEEDING DEPTHS SHOWN ON THE DRAWINGS. INCREASE DEPTH AS REQ'D BY GEOTECHNICAL ENGINEER. ALL FOOTING EXCAVATIONS SHALL BE AS NEAT AS PRACTICAL. OVER EXCAVATIONS IN DEPTH SHALL BE FILLED WITH CONC., AND IN WIDTH MAY BE FILLED WITH LEAN CONC. OR COMPACTED, APPROVED BACKFILL. ALL LOOSE SOILS SHALL BE REMOVED FROM EXCAVATIONS PRIOR TO PLACEMENT OF REINF. OR CONC. GEOTECHNICAL REPORT BY NEIL O. ANDERSON & ASSOCIATES, REPORT NUMBER SFG-0004, DATED MARCH 3,2006.

FOUNDATION PLAN NOTES **D**

CONCRETE:

A. CONCRETE SHALL BE HARD ROCK CONC. (5 SACK CEMENT PER CU.YD. MIN.) AND MEET THE FOLLOWING MIN. ULTIMATE COMPRESSIVE STRENGTHS AT 28 DAYS:

LOCATION	MIN. STRENGTH 28 DAYS P.S.I.	AGGREGATE SIZE - INCHES	SLUMP INCHES	TOLERANCE
SLAB ON GRADE	(2500 DESIGN)	1" x #4	3-1/2"	±1/2"
FOUNDATIONS	(2500 DESIGN)	1" x #4	3-1/2"	±1/2"

B. CONCRETE MIX DESIGN AND TESTING SHALL MEET WITH THESE SPECS. CEMENT SHALL BE IN ACCORDANCE WITH A.S.T.M. C 150 TYPE II. VERIFY MIN. CONC. STRENGTH AND CEMENT TYPE.
C. REINFORCING STEEL SHALL CONFORM TO A.S.T.M. A-615, GRADE 60. STEEL SHALL BE KEPT CLEAN AND FREE OF RUST.
D. CONCRETE CURING SHALL BE IN ACCORDANCE WITH REQUIREMENTS OF ACI-318-95 SECTION 5.11 AND STANDARD PRACTICE FOR CURING CONCRETE BY A.C.I. COMMITTEE 308.
E. ANCHOR BOLTS - A36 OR A307, USE 5/8" DIAMETER x 12" (18" AT CURBS) ANCHOR BOLTS (A.B.) AT 16" O.C. U.N.O. ANCHOR BOLTS SHALL BE TIED IN PLACE PRIOR TO PLACEMENT OF CONC. USE 2"x 2"x 3/16" STEEL WASHER UNDER STEEL BOLT NUTS AT ALL ANCHOR BOLTS TYP.

SLAB:

A. 4" THICK CONC. SLAB REINF. W/ WWF; OVER 2" SAND; OVER 10 MIL VISQUEEN MEMBRANE; OVER 6" AGGREGATE BASE; OVER ENGINEERED SUBGRADE, PER SOILS REPORT (TYP.).

1. NOT USED
2. SHEARWALL HOLDOWN ANCHOR PER SCHEDULE D/ S2.0. SEE DETAIL 20/ S4.1.
3. 1/2" WATER LINE THRU FLOOR. SEE PLUMBING DRAWINGS FOR LOCATION. PROVIDE PVC SLEEVE THRU SLAB.
4. CONCRETE FLOOR SLAB UNDER W.I.C./W.I.F. BOXES. SLAB SHALL BE LEVEL.
5. ELECTRICAL STUBS THRU SLAB. SEE ELECT. DRAWINGS FOR LOCATIONS.
6. PROVIDE FLOOR SINK (FS).
7. INDICATES INSIDE SURFACE OF FOOTING. SEE SHEET S4.0
8. 6" RECESSED MOP SINK.
9. CONFIRM SLAB EXTENSION WITH W.I.C./W.I.F. BOX MFR. (4" MIN.)
10. NOT USED.
11. ANCHOR BOLTS INDICATED ON THIS DRAWING REPRESENT SPECIFIC LOCATIONS DICTATED BY WALL OPENING LOCATIONS. ANCHOR BOLTS LOCATED THROUGHOUT PERIMETER OF BUILDING BUT NOT SHOWN ON THIS DRAWING SHALL BE PROVIDED AS REQUIRED BY THE "WALL SHEATHING AND SHEARWALL SCHEDULE" D/S2.0.
12. NOT USED
14. KEYED CONSTRUCTION OR SAWED CONTROL JOINTS IN CONCRETE SLAB.
15. 4" THICK CONCRETE FLOOR SLAB REINFORCED W/ 6"X6" W1.4 X W1.4 WWF; OVER 2" SAND OVER 10 MIL VAPOR BARRIER OVER 6" CRUSHED ROCK OR AGGREGATE BASE OVER COMPACTED/ ENGINEERED SUBGRADE (PER SOIL REPORT)
16. 4" HIGH CONCRETE CURB ON ALL INTERIOR WALLS (WIDTH VARIES PER A1 DWG.) SEE CURB DETAILS ON S4.0
17. U.N.O. ALL CONCRETE FLOOR SLABS TO SLOPE TO FLOOR DRAIN @ ELEVATIONS NOTED ON PLAN IN KITCHEN & TOILET ROOM AREAS.
18. 3" DEPRESSION UNDER FREEZER. VERIFY FINAL FREEZER/ BLOCK OUT DIMENSIONS WITH FREEZER MFR. PRIOR TO FORMING SLAB. IT IS CRITICAL THAT DEPRESSION FLOOR SLAB AND SIDES BE TRUE AND LEVEL. REFER TO DETAIL 4.
19. SERVICE COUNTER WALL. REFER TO DETAIL.
20. HOLD DOWN ANCHOR PER SHEARWALL SCHEDULE DWG. S2 TO 4X6 POST. HOLD DOWN BOLTS/ NUTS SHALL NOT BE COUNTERSUNK INTO POSTS.
21. 6" RECESSED MOP SINK. SEE DETAIL 5/S4.0

CITY OF SAN JOSE
BUILDING DIVISION
B.P. #
DATE

KEY NOTES **B**

Vincent+Murphy Incorporated

637 Fifth Avenue
San Rafael, Ca. 94901
(415) 451-2500
FAX 451-2595

LICENSED ARCHITECT HUGH EDWARD MURPHY No. C17928 REN. 10/31/07 STATE OF CALIFORNIA

JOB NUMBER
H0510

SUBMITTALS

03/24/06	BLDG PC#1 SUBMITTAL

REVISIONS

1 04/28/06	P.C. RESPONSE #1

CONTRACT DATE:
BUILDING TYPE: KA60-Y04
PLAN VERSION: JAN 05 D
SITE NUMBER:
STORE NUMBER:

KFC / A&W

3144 S. BASCOM AVENUE
SAN JOSE, CA. 95124-2022

All American Food

KA60-Y04

FOUNDATION PLAN

S1.0

W:\Data\harmon\2005\H0510_san jose_bascom\03_cd_current\U18_KA_Y04-S1_0.dwg modified by lhannigan at Jun 26, 2006 - 3:26pm

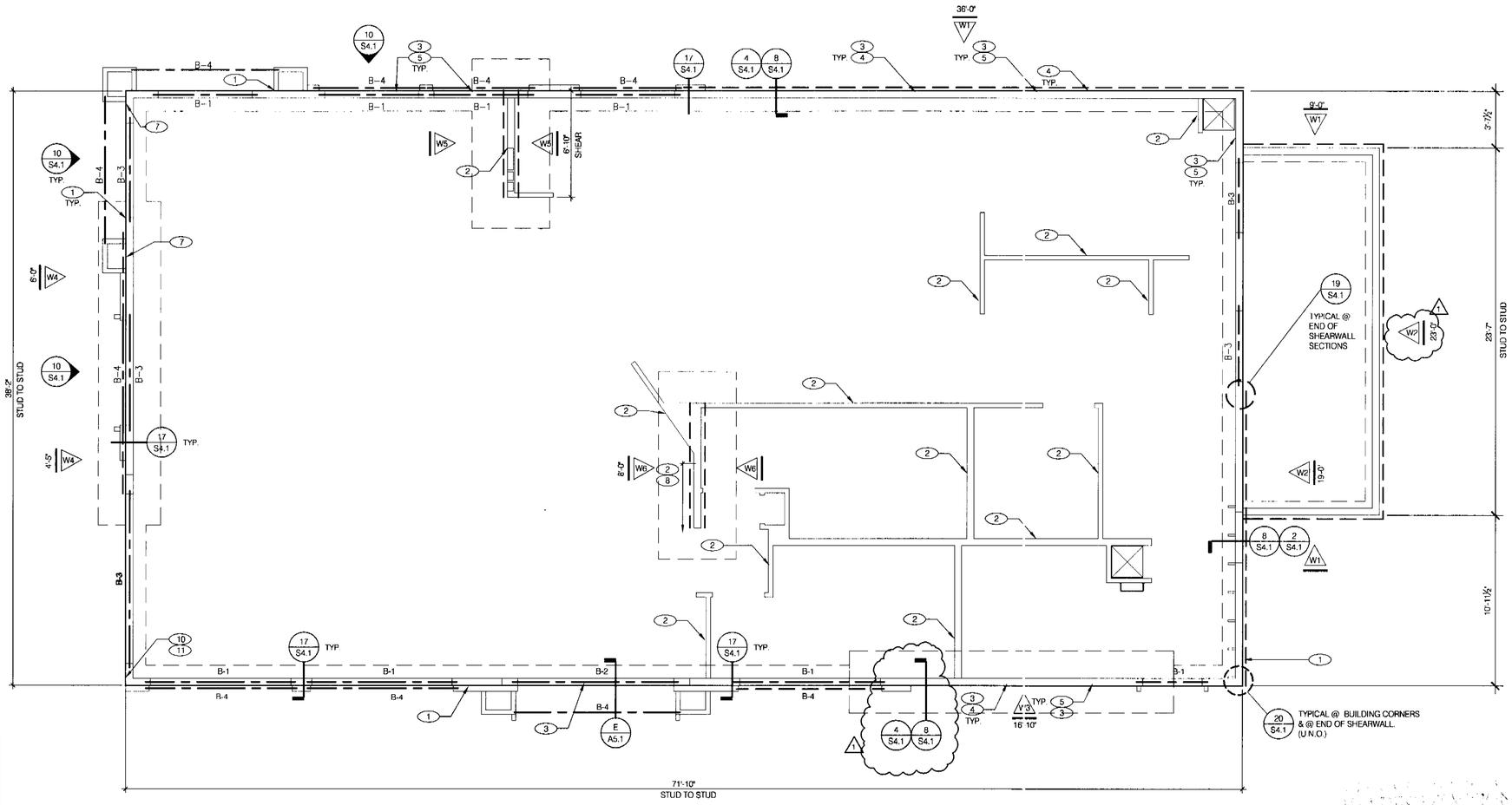

BEAM SCHEDULE	
B - 1	6 x 12 D.F. #1
B - 2	6 x 14 D.F. #1
B - 3	6 x 12 D.F. #1
B - 4	4 x 12 D.F. #1

WALL FRAMING PLAN 1/4"=1'-0" A

EN = PLYWOOD EDGE NAILING. BLOCK ALL UNSUPPORTED EDGES WITH 2x MATERIAL U.O.N.
FIELD NAILING SHALL BE 12" O.C. U.O.N. WALLS DESIGNATED AS SHALL BE 1/2" 5 PLY PLYWD MIN.
ALL PLYWD NAILS SHALL BE COMMON WIRE. SEE SPECS FOR OTHER NAIL REQS.
ALL EXTERIOR WALLS NOT DESIGNATED AS SHALL BE SHEATHED AS 1/2" PLY (32/16) STRUCT AND NAILED WITH 10d AT 6" O.C. EDGES AND 12" O.C. FIELD. PROVIDE 5/8" DIA A307 AB (I) AT SILL PLATE AT 48" O.C. U.O.N., USE 2"x2"x3/16" WASHERS FOR ALL ANCHOR BOLTS.
SHEARWALL LENGTHS WHERE NOTED ARE MINIMUM. DO NOT LOCATE HOLDDOWNS FROM THESE DIMENSIONS. SEE ARCH DWGS FOR ACTUAL WALL LENGTHS.
HOLDERS TO SIMPSON STRONGTIE CO. HOLDDOWNS. POST FOR HOLDOWN SHALL BE 4x MIN. POST WIDTH SHALL MATCH STUD WALL WIDTH. SEE FOUNDATION PLAN FOR OTHER REQS.
EDGE NAIL WALL PLY TO STUDS OR POSTS WITH HOLD-DOWNS.
WHERE PANELS ARE APPLIED TO BOTH FACES OF A WALL AND NAIL SPACING IS LESS THAN 6" O.C. ON EITHER SIDE, PANEL JOINTS SHALL BE OFFSET TO WALL OR DIFFERENT FRAMING MEMBERS OR FRAMING SHALL BE 3x OR THICKER AND NAILS ON EACH SIDE SHALL BE STAGGERED.
WOOD PLATES OR SILLS SHALL BE BOLTED TO THE FOUNDATION OR FOUNDATION WALL. STEEL BOLTS WITH A MINIMUM NOMINAL DIAMETER OF ⅝ INCH (16 MM) NOMINAL DIAMETER SHALL BE USED IN SEISMIC ZONE 4. BOLTS SHALL BE EMBEDDED AT LEAST 7 INCHES INTO THE CONCRETE. THERE SHALL BE A MINIMUM OF TWO BOLTS PER PIECE WITH ONE BOLT LOCATED WITHIN 12 INCHES OR LESS THAN SEVEN BOLT DIAMETERS FROM EACH END OF THE PIECE. A PROPERLY SIZED NUT AND WASHER SHALL BE TIGHTENED ON EACH BOLT TO THE PLATE. FOUNDATION PLATES AND SILLS SHALL BE THE KIND OF WOOD SPECIFIED IN SECTION2306A.4.

SHEAR WALL NOTES E

	SHEATHING & NAILING	ALLOW
1	1/2" PLY. STRUCT I. 10d AT 6" C. EDGES.	340 #/1
2	1/2" PLY. STRUCT I. 10d AT 2" C. EDGES. 3 X MEMBER AT PLYWOOD EDGES AND SILL PLATE.	730
3	1/2" PLY. STRUCT I. 10d AT 4" C. EDGES, 3 X MEMBER AT PLYWOOD & SILL.	510
4	USE TYPE 3 W/ PLYWOOD SHEETING ON BOTH SIDES	1020

NOTE: 1. ALL PLYWOOD EDGES SHALL BE SOLID BLOCKED
2. 12" C. FIELD NAILING

	BASE ANCHOR	ALLOW
1	5/8" Ø A. BOLTS @ 48" C.	274 #/1
2	5/8" Ø A. BOLTS @ 16" C.	822
3	5/8" Ø A. BOLTS @ 32" C.	410
4	5/8" Ø A. BOLTS @ 24" C.	548
5	5/8" Ø A. BOLTS @ 12" C.	1096

NOTE: 1. USE 2"X2"X3/16" STEEL WASHER FOR ALL ANCHOR BOLTS

	HOLDDOWN	ALLOW
1	SIMPSON HTT22 W/ 4 X POST & SSTR28, ANCHOR, EMBED = 24 1/8" MIN.	4.4[k]
2	SIMPSON HD14A W/ 6 X POST & 1" Ø AB W/ NUT & WASHER, EMBED = 10" MIN.	10.5[k]

WALL	LOAD "V"	WALL LENGTH	SHEATHING & NAILING	BASE ANCHOR	M_{OT}	0.67X M_R	F_{UP}	HOLD-DOWN	NOTES
W1	8398	36' 233 #1	1	1	109.2[1,k]	231	--	—	-
W2	5180 1332 6512	19 343	1	3	91.2	37.6	9.8	1	--
W3	8398	16.9 497	3	4	109.2	76	1.97	1	--
W4	3700	2 - SIMPSON STRONG WALL SW 48 X12 X 6 ALLOW 2695 X 2 = 7396			--	--	--	—	
W5	3700 1776 5476	6.8 805	4	2	71.2	2.2	10.1[k]	2	--
W6	1776 5180 6956	8 870	4	5	90.4	10.6	9.97[k]	2	1 --

WALL SHEATHING AND SHEARWALL SCHEDULE D

WALL FRAMING:
A. SEE STRUCTURAL CALCS FOR ACCEPTABLE GRADES AND SPECIES OF LUMBER U.O.N.
B. ALL BEAMS AND JOISTS SHALL BE SEAT CUT FOR FULL UNIFORM BEARING AT SUPPORTS. BEAM SEATS AND COLUMN CAPS.
C. SEE SHEET A1.0 FOR DIMENSIONS.
D. EXTERIOR STUD WALLS ARE 2x6 AT 16" O.C. U.O.N.
E. ALL WOOD IN CONTACT WITH CONC., STEEL OR GRADE SHALL BE PRESSURE TREATED.
F. ALL BOLTED OR NAILED STRAP CONNECTIONS SHALL HAVE AN EQUAL NUMBER OF BOLTS OR NAILS EACH SIDE OF THE SPLICE JOINT. THE FIRST BOLT OR NAIL FROM EACH SIDE OF THE SPLICED OR TREATED MEMBER SHALL BE EQUAL DISTANCE FROM THE SPLICE. STRAPS USING 16d NAILS ON 2x MATERIAL SHALL BE INSTALLED ON THE 1-1/2" EDGE OF THE MEMBER.
G. THE CONTRACTOR SHALL VERIFY THAT THE MOISTURE CONTENT OF ALL FRAMING LUMBER AND PLYWOOD MEET THE REQUIREMENTS OF THE SPECS. AT THE TIME OF INSTALLATION AND AT CLOSE-IN.
H. SEE SHEARWALL SCHEDULE AND SHEARWALL SCHEDULE NOTES FOR PLATE SIZES.

STUD LAYOUT:
A. LAYOUT STUDS ON SIDEWALLS (LONG WALLS) STARTING AT REAR OF BUILDING TOWARDS FRONT.
B. LAYOUT STUDS ON ENDWALLS (SHORT WALLS) STARTING AT EACH END AND WORKING TOWARDS CENTER.

FRAMING PLAN NOTES C

1. STUD SETBACK 1/2" FROM EDGE OF CONC. SLAB, TYPICAL.
2. INTERIOR NONBEARING STUD WALL FRAMING REFER TO SHEET A1.0 FOR DIMENSIONS AND STUD SIZES. SEE DETAIL 13 & 14/S4.1 AND WALL FRAMING NOTES.
3. (2) 2X6 TOP PLATES - SPLICE PER 1½/S4.1. U.O.N.
4. TOP OF PLATE ELEVATION 11'-1 1/2" = TRUSS BEARING.
5. TOP OF PLATE ELEVATION 18'-8 1/2" @ HIGHER PARAPET.
6. TOP OF PLATE ELEVATION 16'-3 1/2" @ LOWER PARAPET.
7. SHEARWALL SHEATHING SHALL NOT BE INTERRUPTED WITH TOWER FRAMING - TYPICAL.
8. LOW PARAPET FRAMING. SEE 11/S4.1.
9. TOP OF PLATE ELEVATION 19'-8 1/2" @ HIGH TOWER FRAMING.
10. SLAB FOR PREFAB WALK-IN. SEE A1 FOR INFORMATION.

KEY NOTES B

Vincent+Murphy Incorporated
637 Fifth Avenue
San Rafael, Ca. 94901
(415) 451-2500
FAX 451-2595

LICENSED ARCHITECT HUGH EDWARD MURPHY No. C17928 EXP. 10/31/06 STATE OF CALIFORNIA

JOB NUMBER
H0510

SUBMITTALS

03/24/06	BLDG PC#1 SUBMITTAL

REVISIONS

1 04 / 28/ 06	P.C. RESPONSE #1

CONTRACT DATE:
BUILDING TYPE: KA60-Y04
PLAN VERSION: JAN 05 D
SITE NUMBER:
STORE NUMBER:

KFC / A&W
3144 S. BASCOM AVENUE
SAN JOSE, CA. 95124-2022

KA60-Y04

WALL FRAMING PLAN

S2.0

w:\Data\harmer\2005\H0510_san jose_bascom\03_cd_current\019_KA_Y04-S2_0.dwg modified by Dhenrigon at Jan 26, 2006 - 3:28pm

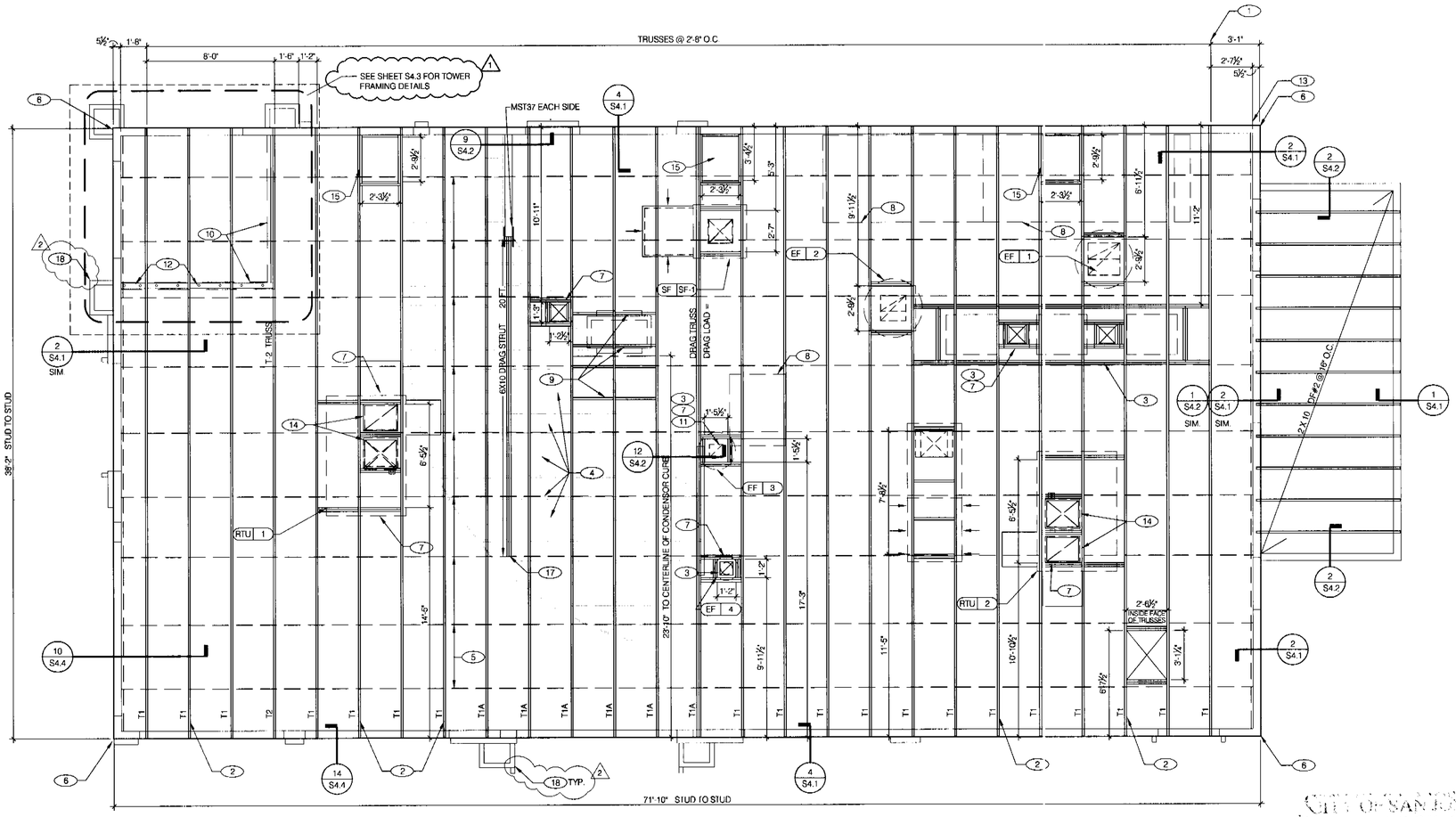

EXTREME CARE SHALL BE USED IN ERECTING ROOF TRUSSES - COMPLY WITH TPI BRACING REQUIREMENTS.

ROOF NOT DESIGNED FOR PONDING. SEE ARCHITECTURAL DRAWINGS FOR DRAIN REQUIREMENTS.

CITY OF SAN JOSE BUILDING DIVISION
APP. #
DATE

N REF. NORTH

ROOF FRAMING PLAN 1/4"=1'-0" A

TYPE	NAILING / SHEATHING	REMARKS
BN	10d @ 6" O.C.	-
EN	10d @ 6" O.C.	-
HN	10d @ 12" O.C.	-
ROOF SHEATHING	5/8" CDX PLYWOOD (40/20), PS1 RATING	-

NOTE:

SEE 13/S4.2 FOR DEFINITIONS.

NAILING SCHEDULE - ROOF D

ROOF FRAMING NOTES:
A. ALL MECHANICAL SUPPLY AND RETURN OPENINGS SHALL BE BETWEEN FRAMING U.O.N.

MANUFACTURED ROOF TRUSS NOTES:
A. MFR'D ROOF TRUSSES ARE AT 2'-8" O.C. U.O.N.

B. "T-#" DENOTES ROOF TRUSS TYPE. REFER TO SCHEDULE 11/S4.2.

C. TRUSS DWGS ARE PROVIDED FOR CONCEPTUAL DESIGN ONLY. MFR SHALL SUBMIT SHOP DWGS AND CALCS. BOTH SIGNED BY A LICENSED STRUCTURAL ENGINEER (STATE OF CALIFORNIA). SUBMIT SHOP DWGS AND CALCS TO THE ARCHITECT AND ENGINEER FOR REVIEW AND SUBMITTAL AND, IF REQUIRED, TO BLDG OFFICIAL FOR APPROVAL PRIOR TO FABRICATION. SHOP DWGS SHALL INCLUDE LAYOUT PLAN AND CONNECTORS. CALCS SHALL BE BASED ON THE SPECIFIED LOADING CONDITIONS SHOWN HEREIN. MFR SHALL PROVIDE HANGERS AND CONNECTIONS BETWEEN TRUSSES. REVIEW AND APPROVE DIMENSIONS, SHAPES AND DETAILS SHOWN ON SHOP DWGS PRIOR TO SUBMITTAL TO THE ARCHITECT / ENGINEER FOR REVIEW AND COMMENT.

D. TRUSS MFR SHALL PROVIDE HANGERS AND CONNECTORS ADEQUATE FOR LOADS. ROOF CONNECTORS ARE BASED UPON SIMPSON "STRONG TIE" OR APPROVED EQUAL.

E. TRUSS CHORDS AND PARAPET VERTICALS SHALL BE 2x6 MIN AND CONSISTENTLY SIZED THROUGHOUT PROJECT.

F. REFER TO TRUSS ELEVATIONS FOR SHAPE, OVERHANG, SLOPES, SPAN, ETC. LOCATION OF BEARING POINTS ARE AS INDICATED ON THE DRAWINGS. SEE 3/S4.2.

G. MFR'D ROOF TRUSS DESIGN LOADS: SEE TRUSS DESIGN CRITERIA 4/S4.2.

H. THE POSITIONS, WEIGHTS, AND METHODS OF ATTACHMENT OF ALL MECHANICAL UNITS, ELECT FIXTURES, PLUMBING, ETC. SHALL BE INCLUDED IN THE DESIGN OF THE TRUSSES BY THE TRUSS MFR. SEE CHART 8/S4.2.

I. DESIGN ROOF TRUSSES TO SUPPORT ALL IMPOSED LOADS, INCLUDING WIND & LATERAL LOADS. COORDINATE SIZE, LOCATION AND WEIGHT OF EQUIPMENT WITH MECHANICAL WORK. PROVIDE MULTIPLE TRUSSES WHERE ONE TRUSS CANNOT SUPPORT THE LOAD. PROVIDE BRIDGING BETWEEN TRUSSES AS SPECIFIED AS MINIMUM STANDARD.

J. INSTALLATION OF ALL TRUSSES SHALL BE DONE USING A SPREADER BAR WITH A THREE POINT VERTICAL PICK. CARE SHALL BE USED IN LIFTING TO PREVENT HORIZONTAL BENDING.

K. IMPROPER HANDLING OF THE TRUSSES AS NOTED ABOVE AND IN THE SPECS SHALL MEAN REMOVAL OF THE TRUSSES FROM THE JOBSITE AND REPLACEMENT AT CONTRACTOR'S EXPENSE.

L. SEE DIV. 6 OF THE SPECS FOR DETAILS ON TRUSS MANUFACTURING AND NAILING.

M. LOCATE WALK-IN CONDENSERS ON ROOF ONLY IF REQUIRED BY CODE.

N. PROVIDE 2X6 STUDS UNDER EACH ROOF TRUSS, USE DOUBLE 2X6 STUDS UNDER DOUBLE TRUSS.

ROOF FRAMING NOTES C

1. STARTING POINT OF TRUSS LAYOUT - REAR EDGE OF TRUSS.
2. VERIFY NECESSITY OF DOUBLE TRUSSES WITH TRUSS MFR. DUE TO POINT LOADING. TYPICAL. SECOND TRUSS (IF REQ'D.) SHALL BE LOCATED ON THE FRONT SIDE OF ILLUSTRATED TRUSS.
3. COORDINATE BLOCKING WITH EXHAUST AND SUPPLY DUCT.
4. 2x6 CEILING JOISTS @ 16" O.C. @ 10'-4" A.F.F. SEE 1/A6.4.
5. CONT. 2x4 WD BRIDGING ON TOP OF BOTTOM CHORD. ADJUST AS REQUIRED FOR DUCT PLENUMS, MAX. SPACING AT 48" O.C. OR TIGHTER SPACING AS REQUIRED BY TRUSS DESIGN. SEE 12/S4.1 FOR LAP CONFIGURATION @ OPEN CLG. AREAS AND 16/S4.1 @ ALL OTHER AREAS.
6. SIMPSON M.S.T.A. 24 AT CORNER DBL. TOP PLATE. CENTER STRAP ON CORNER.
7. (2) 2x6 BLOCKING W/ U26-2 HANGERS. TYP. ALL ROOF OPENINGS - SFF DETAIL 15/S4.2.
8. LOCATION OF HOODS. SEE HOOD DRAWINGS FOR HOOD ATTACHMENT DETAILS.
9. 2x8 JOIST W/ U28 EACH END FOR LENGTH OF CONDENSER PLATFORM. SEE SHEET A3.0 FOR LOCATION.
10. WALL OF TOWER ABOVE.
11. EXHAUST DUCT OPENINGS SIZED FOR "DUCT WRAP". ADJUST ROUGH OPENINGS AS REQUIRED WHERE 1-HR DUCT SHAFT CONSTRUCTION IS REQUIRED BY LOCAL CODE. REFER TO MECH. DWGS.
12. 4X6 BLK'G W/ U46 HANGER EACH END BELOW TOWER (WHERE PERPENDICULAR TO TRUSSES) W/ ½" DIA. ALL THREAD ROD @ 16" O.C.
13. DIMENSION IS FROM INSIDE FACE OF WALL FRAMING.
14. H.V.A.C. ROOF OPENING FOR DUCT. VERIFY SIZE WITH H.V.A.C. MFR. & MECHANICAL DWGS.
15. 2x4 BLOCKING FOR ROOF DRAIN AREA. SEE DETAIL 13/A6.0.
16. NOT USED. 2
17. EDGE NAIL ROOF PLY TO 6X10 STRUT. 2
18. PROVIDE HORIZONTAL FIRE BLOCKING IN ALL FURRED AREAS AND COLUMNS AT 10'-0" O.C. MAX. SEE DETAIL 1 // A6.0. 2

KEY NOTES B

Vincent+Murphy Incorporated
637 Fifth Avenue
San Rafael, Ca. 94901
(415) 451-2500
FAX 451-2595

LICENSED ARCHITECT HUGH HOWARD MURPHY No. C17928 REN. 10/31/07 STATE OF CALIFORNIA

JOB NUMBER H0510

SUBMITTALS

03/24/06	RI D'G PC#1 SUBMITTAL

REVISIONS

1 04/28/06	P.C. RESPONSE #1
2 06/26/06	P.C. RESPONSE #2

CONTRACT DATE:
BUILDING TYPE: KA60-Y04
PLAN VERSION: JAN 05 D
SITE NUMBER:
STORE NUMBER:

KFC / A&W
3144 S. BASCOM AVENUE
SAN JOSE, CA. 95124-2022

KA60-Y04

ROOF FRAMING PLAN

S3.0

W:\Data\normsn\2005\H0510_san jose_bascom\03_cd_current\020_KA_Y04-S3_0.dwg modified by Dhamnigan at Jun 26, 2006 - 3:28pm

NOT USED N.T.S. | 17

NOT USED N.T.S. | 18

NOT USED N.T.S. | 19

NOT USED N.T.S. | 20

NOT USED N.T.S. | 13

NOT USED N.T.S. | 14

NOT USED N.T.S. | 15

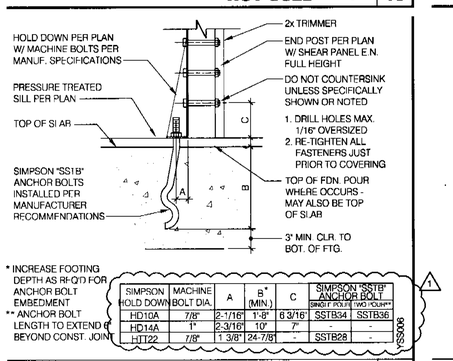

* INCREASE FOOTING DEPTH AS REQ'D FOR ANCHOR BOLT EMBEDMENT

** ANCHOR BOLT LENGTH TO EXTEND 6" BEYOND CONST. JOINT

SIMPSON HOLD DOWN	MACHINE BOLT DIA.	A	B* (MIN.)	C	SIMPSON "SSTB" ANCHOR BOLT SINGLE POUR	SIMPSON "SSTB" ANCHOR BOLT TWO POUR**
HD10A	7/8"	2-1/16"	1'-8"	6 3/16"	SSTB34	SSTB36
HD14A	1"	2-3/16"	10"	7"	-	-
HTT22	7/8"	1 3/8"	24-7/8"	-	SSTB28	-

YSS006

ANCHOR BOLT SCHEDULE N.T.S. | 16

NOT USED N.T.S. | 12

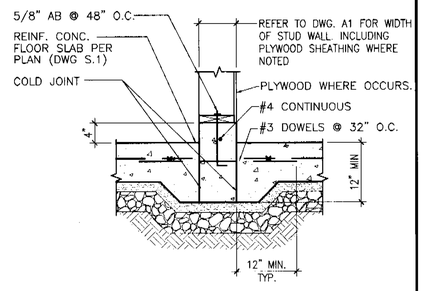

INT. WALL FOOTING N.T.S. | 9

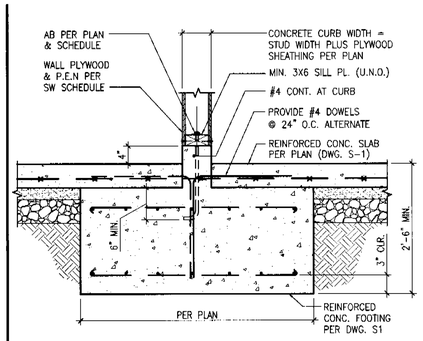

INT. SHEAR WALL FOOTING N.T.S. | 10

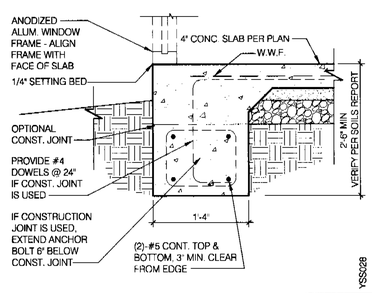

YSS028

FOOTING @ A & W WALL 1"=1'-0" | 11

NOT USED N.T.S. | 6

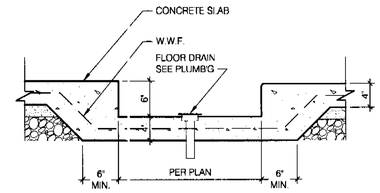

YSS026

SLAB @ MOP SINK 1"=1'-0" | 5

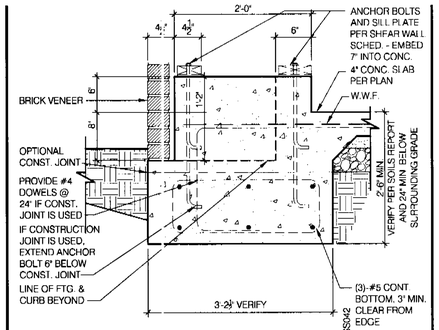

YSS042

FOOTING @ K.F.C. TOWER 1"=1'-0" | 7

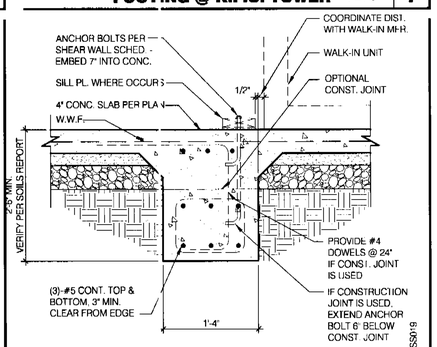

YSS019

FOOTING @ REAR WALL @ WALK-IN 1" = 1'-0" | 8

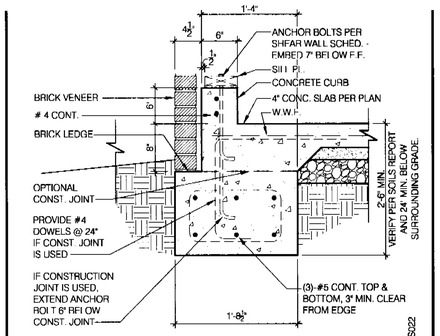

YSS022

TYPICAL FOOTING 1" = 1'-0" | 1

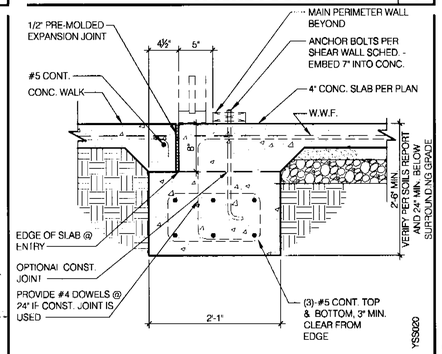

YSS020

FOOTING @ ENTRY 1"=1'-0" | 2

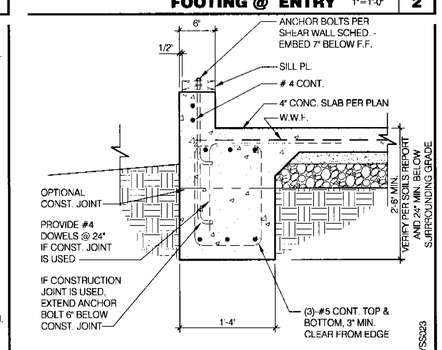

YSS023

FOOTING @ FRONT & REAR WALL 1" = 1'-0" | 3

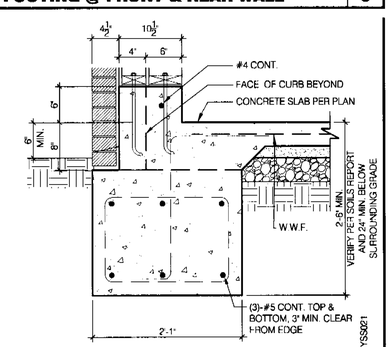

YSS021

FOOTING @ BUMP OUT 1"=1'-0" | 4

Vincent+Murphy Incorporated

637 Fifth Avenue
San Rafael, Ca. 94901
(415) 451-2500
FAX 451-2595

LICENSED ARCHITECT HUGH EDWARD MURPHY No. C17928 REN. 10/31/07 STATE OF CALIFORNIA

JOB NUMBER
H0510

SUBMITTALS

03/24/06	BLD'G PC#1 SUBMITTAL

REVISIONS

1	04/28/06	P.C. RESPONSE #1

CONTRACT DATE:
BUILDING TYPE: KA60-Y04
PLAN VERSION: JAN 05 D
SITE NUMBER:
STORE NUMBER:

KFC / A&W

3144 S. BASCOM AVENUE
SAN JOSE, CA. 95124-2022

All American Food

KA60-Y04

STRUCTURAL DETAILS (FOUNDATION)

S4.0

CITY OF SAN JOSE BUILDING DEPARTMENT

w:\Data\horman\2005\H0510_san jose_bascom\03_cd_current\021_KA_Y04-S4_0.dwg modified by Dhanagan at Jun 26, 2006 - 3:28pm

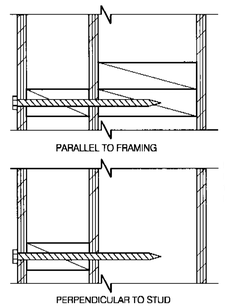

BUILD-OUT ATTACHMENT N.T.S **17**

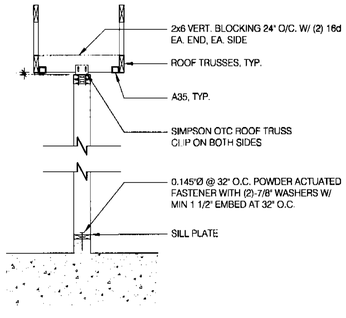

SUPPORT- PARALLEL TO TRUSS 1/2" = 1'-0" **13**

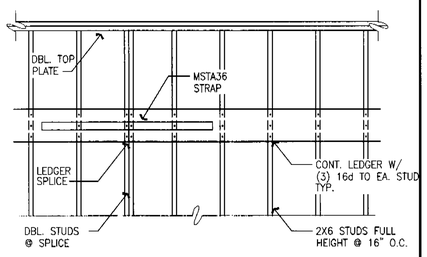

SPLICE DETAIL FOR LEDGER 1/2" = 1'-0" **18**

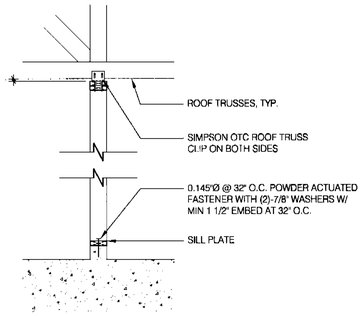

SUPPORT PERP. TO TRUSS 1/2" = 1'-0" **14**

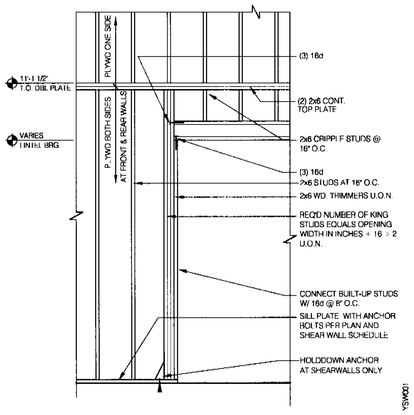

FRAMING ELEVATION @ OPENING 3/8" = 1'-0" **10**

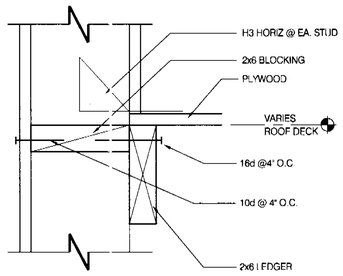

LEDGER DETAIL 3" = 1'-0" **5**

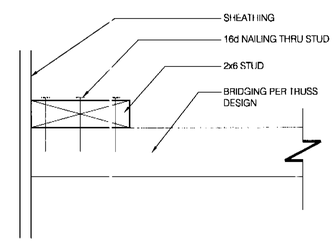

BRIDGING DETAIL 3" = 1'-0" **6**

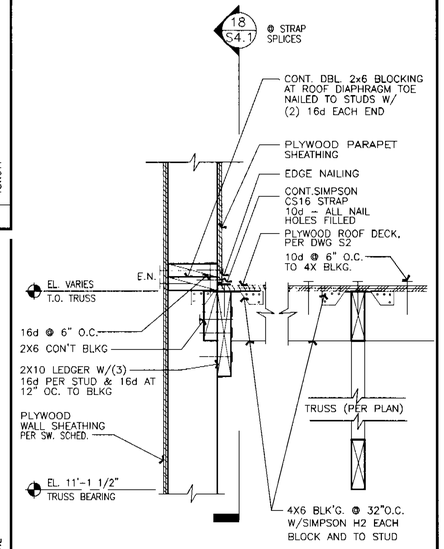

REAR AND FRONT WALL @ TRUSS 3/4" = 1'-0" **2**

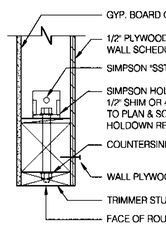

HOLD DOWN END 1-1/2" = 1'-0" **19**

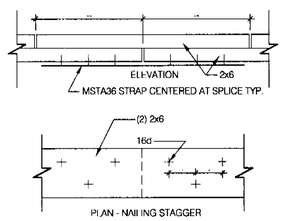

PLATE LAP DETAIL N.T.S. **15**

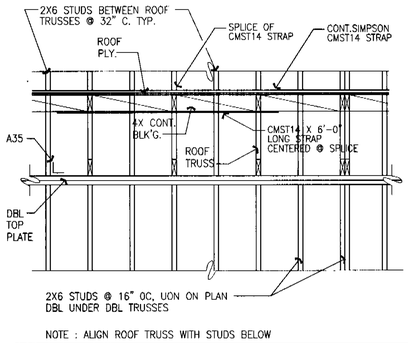

SPLICE DETAIL FOR STRAP 1/2" = 1'-0" **11**

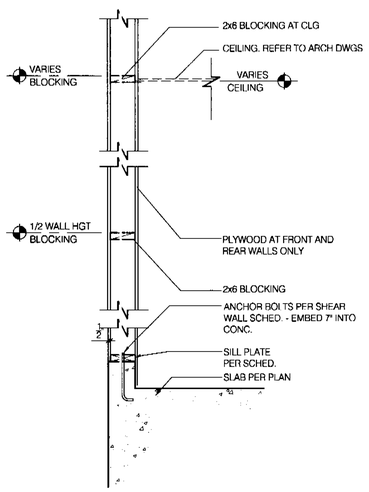

TYPICAL WALL BELOW TRUSS 3/4" = 1'-0" **8**

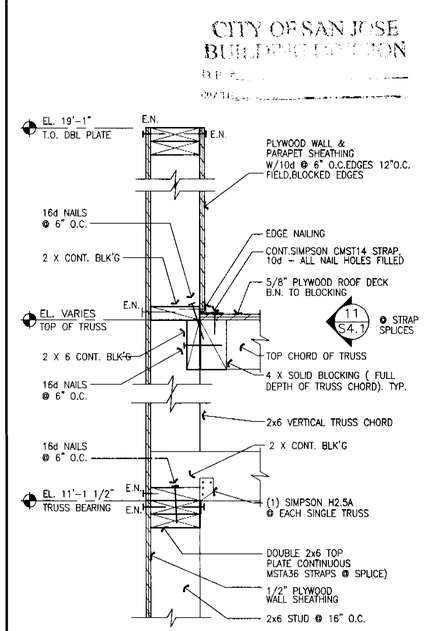

SIDE WALL @ TRUSS SECTION 3/4" = 1'-0" **4**

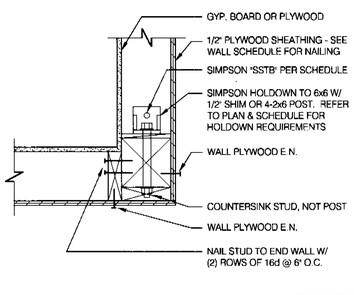

HOLD DOWN CORNER 1-1/2" = 1'-0" **20**

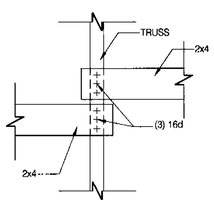

BRIDGING LAP DETAIL N.T.S. **16**

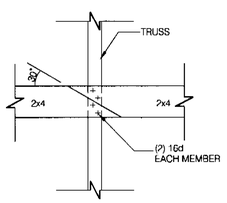

BRIDGING LAP DETAIL @ OPEN CLG. N.T.S. **12**

Vincent+Murphy Incorporated

637 Fifth Avenue
San Rafael, Ca. 94901
(415) 451-2500
FAX 451-2595

LICENSED ARCHITECT HUGH EDWARD MURPHY No. C17928 EXP. 10/31/07 STATE OF CALIFORNIA

JOB NUMBER
H0510

SUBMITTALS

03/24/06	BLD'G PC#1 SUBMITTAL

REVISIONS

CONTRACT DATE:
BUILDING TYPE: KA60-Y04
PLAN VERSION: JAN 05 D
SITE NUMBER:
STORE NUMBER:

KFC / A&W

3144 S. BASCOM AVENUE
SAN JOSE, CA 95124-2022

KA60-Y04

STRUCTURAL DETAILS (FRAMING)

S4.1

W:\Data\harman\2005\H0510_san jose_bascom\03_cd_current\022_KA_Y04-S4_1.dwg modified by Dhanrajan at Jun 26, 2006 - 3:26pm

CONNECTION TYPE:	NAILING:
1. JOIST TO SILL OR GIRDER, TOENAIL	(3-8d)
2. BRIDGING TO JOIST, TOENAIL EACH END	(2-8d)
3. 1"x6" (25MMx152MM) SUBFLOOR OR LESS TO JOIST, FACE NAIL	(2-8d)
4. WIDER THAN 1" X 6"(25MMx152MM) SUBFLOOR TO JOIST, FACE NAIL	(3-8d)
5. 2" (52MM) SUBFLOOR TO GIRDER, BLIND AND FACE NAIL	(2-16d)
6. SOLE PLATE TO JOIST OR BLOCKING, TYPICAL FACE NAIL	(16d @16" O.C.)
7. SOLE PLATE TO JOIST OR BLOCKING, AT BRACED W. PANELS	(3-16d PER 16')
8. TOP PLATE TO STUD, END NAIL	(2-16d)
9. STUD TO SOLE PLATE	(2-16d END NAIL)
10. DOUBLE STUDS, FACE NAIL	(16d @ 24", O.C.)
11. DOUBLE TOP PLATES, TYPICAL FACE NAIL	(16d @ 16" O.C.)
12. DOUBLE TOP PLATES, LAP SPLICE	(8-16d)
13. BLOCKING BETWEEN JOISTS OR RAFTERS TO TOP PLATE, TOENAIL	(3-8d)
14. RIM JOIST TO TOP PLATE, TOENAIL	(8d @ 6" O.C.)
15. TOP PLATES, LAPS AND INTERSECTIONS, FACE NAIL	(2-16d)
16. CONTINUOUS HEADER, TWO PIECES	(16d @ 16" O.C. ALONG EDGE)
17. CEILING JOISTS TO PLATE, TOENAIL	(3-8d)
18. CONTINUOUS HEADER TO STUD, TOENAIL	(4-8d)
19. CEILING JOISTS, LAP OVER PARTITIONS, FACE NAIL	(3-16d)
20. CEILING JOISTS TO PARALLEL RAFTERS, FACE NAIL	(3-16d)
21. RAFTER TO PLATE, TOENAIL	(3-8d)
22. 1" (25MM) BRACE TO EACH STUD AND PLATE, FACE NAIL	(2-8d)
23. 1"x8" SHEATHING OR LESS TO EACH BEARING, FACE NAIL	(2-8d)
24. WIDER THAN 1"x8" SHEATHING TO EACH BEARING, FACE NAIL	(3-8d)
25. BUILT-UP CORNER STUDS	(16d @ 24" O.C.)
26. 2" PLANKS	(2-16d AT EACH SPLICE)
27. 2x6 BOX BEAM / HEADER	(12d @ 12" O.C.)
28. BUILT-UP GIRDER AND BEAMS	(20d @ 32" O.C. AT TOP & BOTTOM AND STAGGERED 2-20d AT ENDS AND AT EACH SPLICE)

YSR005

NAILING SCHEDULE N.T.S. **18**

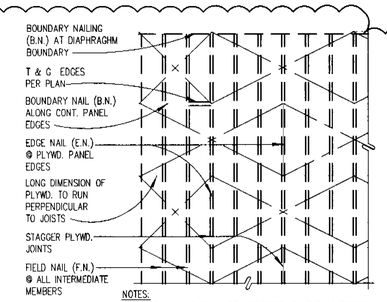

NOTES:
1. PLYWD. NAILING SHALL BE INSPECTED, BY THE GOVERNING BULIDING AUTHORITY, PRIOR TO COVERING.
2. MIN. PLYWD. SHT. SIZE SHALL BE 2'-0" X 4'-0".
3. MIN. 3/8" NAILING EDGE DISTANCE
4. EDGE NAIL (E.N.) O/ BEAMS AND AROUND ALL OPENINGS.

ROOF NAILING PLAN N.T.S. **13**

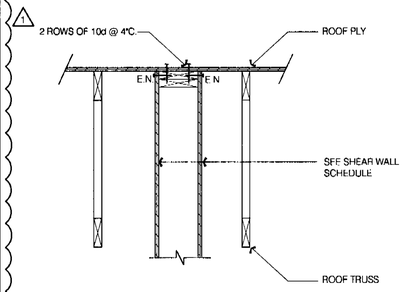

SECTION @ INTERIOR SHEAR WALL N.T.S. **9**

NOT USED N.T.S. **5**

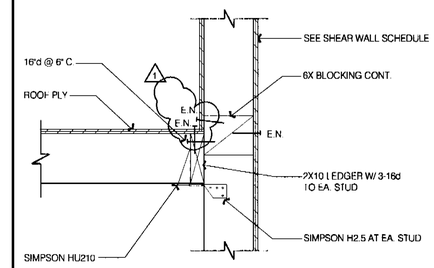

ROOF SECTION N.T.S. **1**

NOT USED N.T.S. **14**

NOT USED N.T.S. **10**

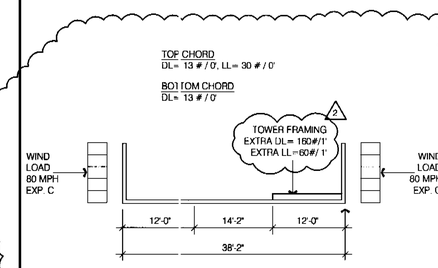

T-2 TRUSS SUPPORTING TOWER N.T.S. **6**

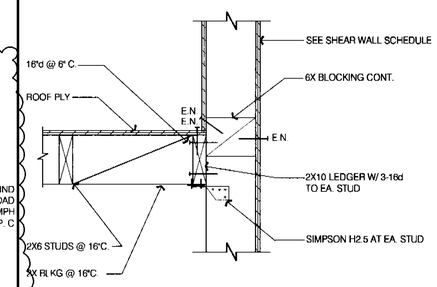

ROOF SECTION N.T.S. **2**

NOT USED N.T.S. **19**

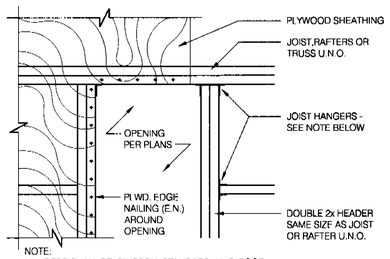

NOTE:
HANGERS SHALL BE "SIMPSON" STANDARD "U" @ ROOF, DBL. JOIST OR RAFTERS SHALL BE JOINED TOGETHER AS FOLLOWS:
1. 10" OR LESS NOM. DEPTH - 16d @ 12" O.C. STAGGERED
2. MORE THAN 10" - (2)16d @ 12" O.C.

YSR004

TYPICAL ROOF OPENING 1"=1'-0" **15**

TRUSS TYPE	SINGLE TRUSS	DOUBLE TRUSS	BEARING POINT	COMMENTS
T1	X		△	
T1A	X		△	LOW PARAPET
T2		X	△	SEE NOTE #1 BELOW

NOTES:
1. T-2 SHALL BE DOUBLE THICKNESS TRUSS AS REQUIRED BY TRUSS DESIGN.
2. HOLDDOWN CONNECTORS SHALL BE SPECIFIED BY SITE SPECIFIC ARCHITECT/ ENGINEER BASED UPON LOADING DATA PROVIDED BY TRUSS DESIGNER.
3. PROVIDE SHOP DRAWINGS PRIOR TO FABRICATION.
4. TRUSS MEMBER SIZES ARE FOR REFERENCE ONLY. ACTUAL SIZE SHALL BE DETERMINED BY TRUSS MANUFACTURER BASED ON ACTUAL LOAD CONDITIONS AND CODES.

YSR022

TRUSS SCHEDULE N.T.S. **11**

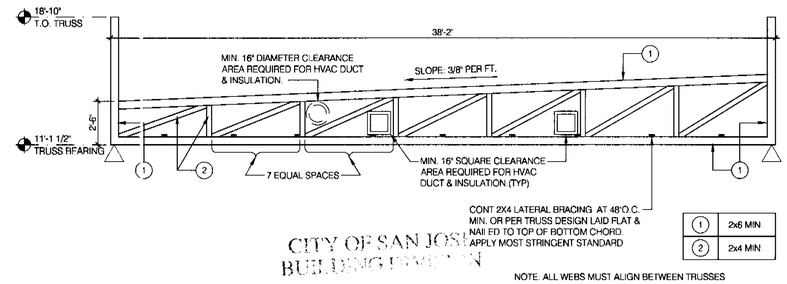

NOTE: ALL WEBS MUST ALIGN BETWEEN TRUSSES

YSR013

T1 TRUSS ELEVATION 1/4" = 1'-0" **3**

NOT USED N.T.S. **20**

NOT USED N.T.S. **16**

NOTE: NAIL DOUBLE TRUSS TOGETHER WITH 16d AT 6"C AT TOP & BOTTOM CHORD, TYP.

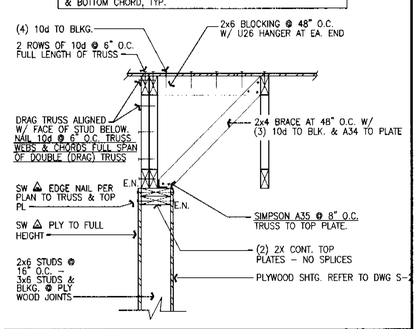

DRAG TRUSS DETAIL N.T.S. **12**

HVAC UNIT - RTU-1	*	1,000 lbs.
HVAC UNIT - RTU-2	*	1,000 lbs.
EXHAUST FAN - EF-1	*	190 lbs.
EXHAUST FAN - EF-2	*	260 lbs.
EXHAUST FAN - EF-3	*	140 lbs.
EXHAUST FAN - EF-4	*	70 lbs.
HOOD #: - KFC		850 lbs.
HOOD #: - A&W		600 lbs.
HOOD #: - CONVECTION		192 lbs.
ICE CONDENSER #1		200 lbs.
ICE CONDENSER #2		200 lbs.

* ALL WEIGHTS INCLUDE CURB.

ROOF TOP EQUIPMENT WEIGHTS N.T.S. **8**

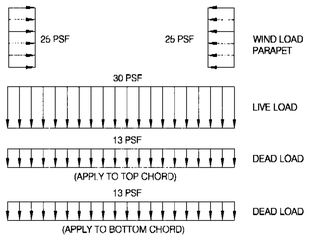

NOTE:
ALSO, APPLY ROOF TOP AND SUSPENDED POINT LOADS. WEIGHT AND LOCATION OF UNITS AS NOTED ARE SHOWN ON THIS SHEET AND ARE NOT INCLUDED IN THE ABOVE LOADING DIAGRAM. VERIFY THESE LOADS WITH MECHANICAL SUPPLIER BEFORE DESIGNING TRUSS.

YSR017

TRUSS DESIGN CRITERIA N.T.S. **4**

Vincent+Murphy Incorporated

637 Fifth Avenue
San Rafael, Ca. 94901
(415) 451-2500
FAX 451-2595

LICENSED ARCHITECT HUGH EDWARD MURPHY No. C17928 Exp. 10/31/07 STATE OF CALIFORNIA

JOB NUMBER
H0510

SUBMITTALS

03/24/06	BLD'G PC#1 SUBMITTAL

REVISIONS

1	04 / 28/ 06	P.C. RESPONSE #1
2	06 / 23/ 06	P.C. RESPONSE #2

CONTRACT DATE:
BUILDING TYPE: KA60-Y04
PLAN VERSION: JAN 05 D
SITE NUMBER:
STORE NUMBER:

KFC / A&W

3144 S. BASCOM AVENUE
SAN JOSE, CA 95124-2022

All American Foods

KA60-Y04

STRUCTURAL DETAILS (ROOF)

S4.2

W:\Data\harman\2005\H0510_san jose_bascom\03_cd_current\023_KA_Y04-S4_2.dwg modified by Dhennigan at Jun 26, 2006 - 3:28pm

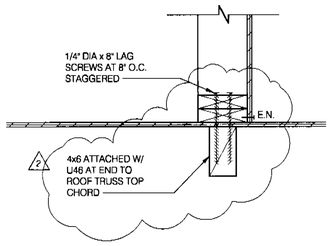

CUPOLA FRAMING DETAIL 1-1/2" = 1'-0" | 17

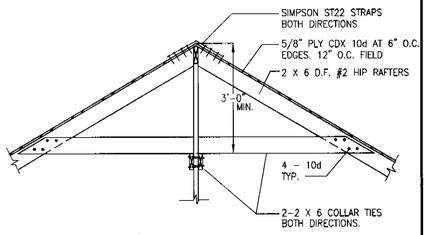

HIP DETAIL N.T.S. | 13

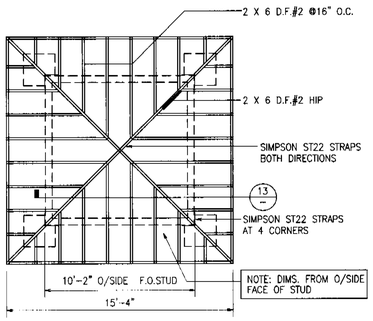

HIP ROOF @ CUPOLA N.T.S. | 14

NOT USED NTS | 18

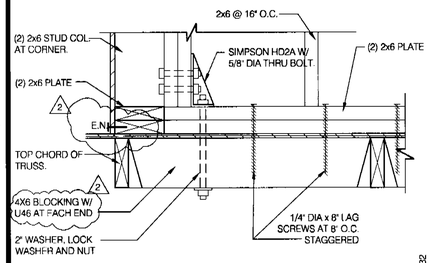

CUPOLA CORNER DETAIL 1-1/2" = 1'-0" | 19

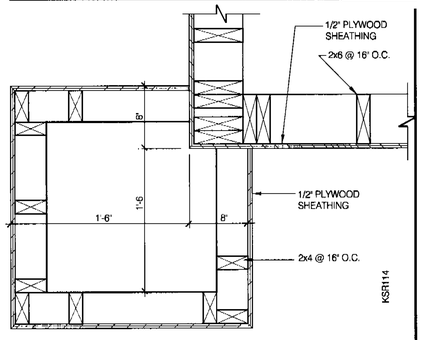

CUPOLA CORNER COLUMN DETAIL 3/4" = 1'-0" | 15

NOT USED NTS | 11

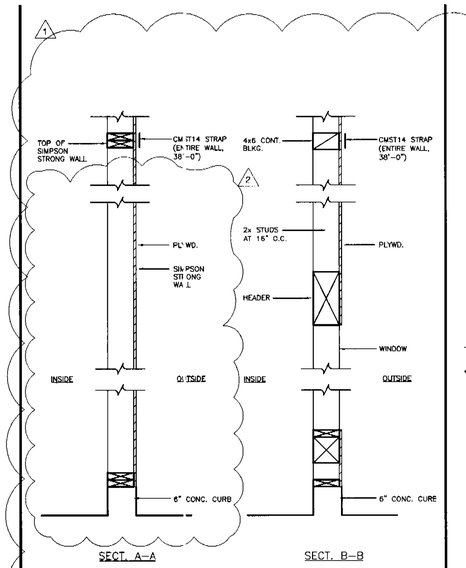

SIMPSON STRONG WALL SECTION NTS | 6

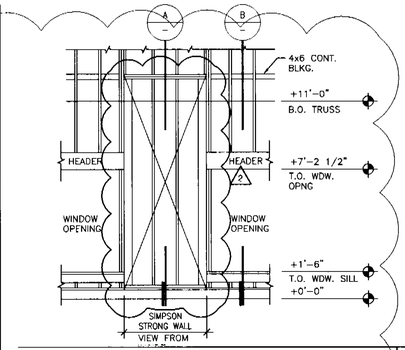

STRONG WALL 1/4" = 1'-0" | 1

NOT USED N.T.S. | 2

NOT USED NTS | 3

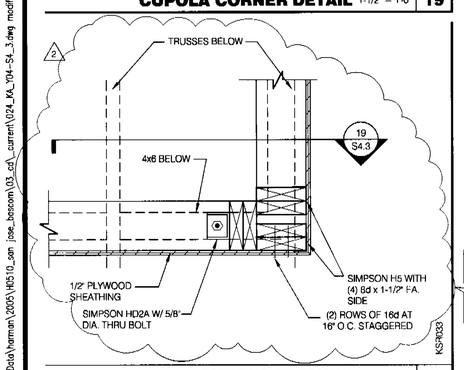

CUPOLA FRAMING 1-1/2" = 1'-0" | 20

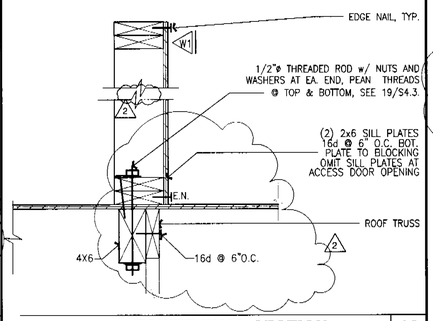

TOWER WALL SECTION 1/4" = 1'-0" | 16

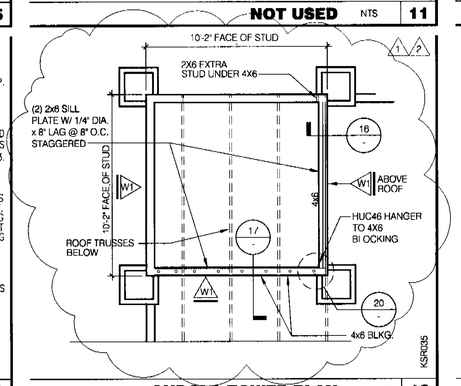

CUPOLA TOWER PLAN 1/4" = 1'-0" | 12

NOT USED N.T.S. | 8

NOT USED N.T.S. | 4

Vincent+Murphy Incorporated

637 Fifth Avenue
San Rafael, Ca. 94901
(415) 451-2500
FAX 451-2595

LICENSED ARCHITECT EDWARD MURPHY No. C17928 EXP. 10/31/07 STATE OF CALIFORNIA

JOB NUMBER
IT0510

SUBMITTALS

03/24/06	BLD'G PC#1 SUBMITTAL

REVISIONS

1	04 / 28 / 06	P.C. RESPONSE #1
2	06 / 23 / 06	P.C. RESPONSE #2

CONTRACT DATE:
BUILDING TYPE: KA60-Y04
PLAN VERSION: JAN 05 D
SITE NUMBER:
STORE NUMBER:

KFC / A&W

3144 S. BASCOM AVENUE
SAN JOSE, CA. 95124-2022

KA60-Y04

STRUCTURAL DETAILS (KFC TOWER)

S4.3

W:\Data\hanman\2003\IT0510_san jose_bascom\03_cd_current\024_KA_T04-S4_3.dwg modified by dhanrigan at Jun 26, 2006 - 3:29pm

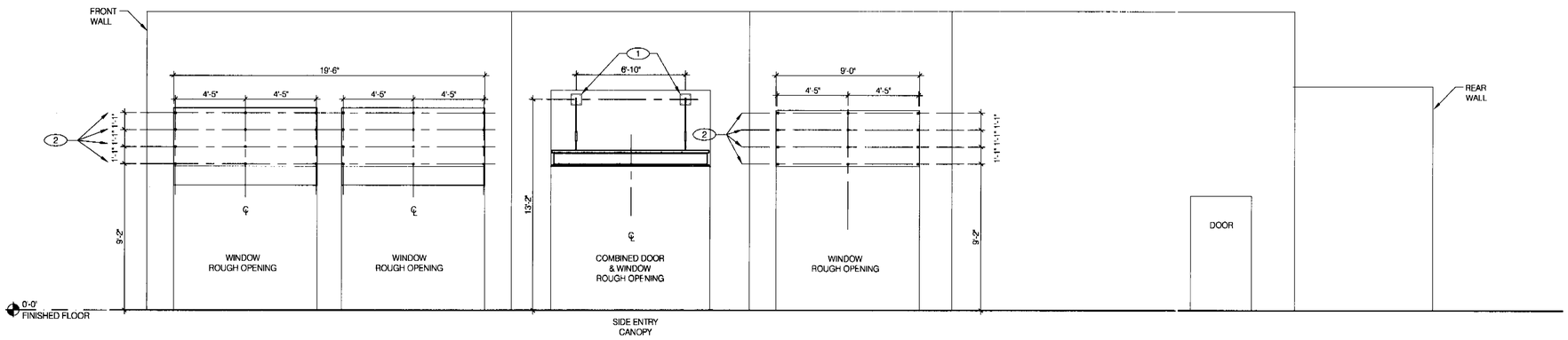

RIGHT SIDE ELEVATION 1/4" = 1'-0" | **A**

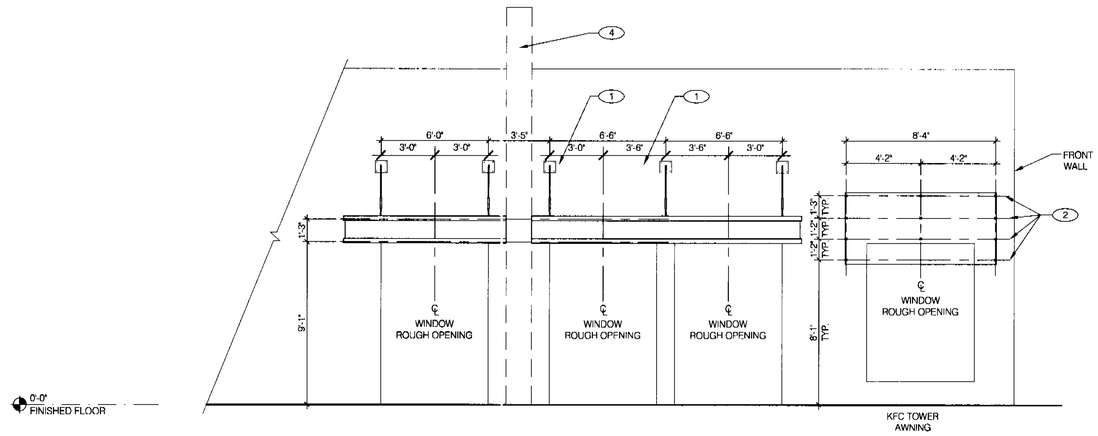

LEFT SIDE ELEVATION 1/4" = 1'-0" | **B**

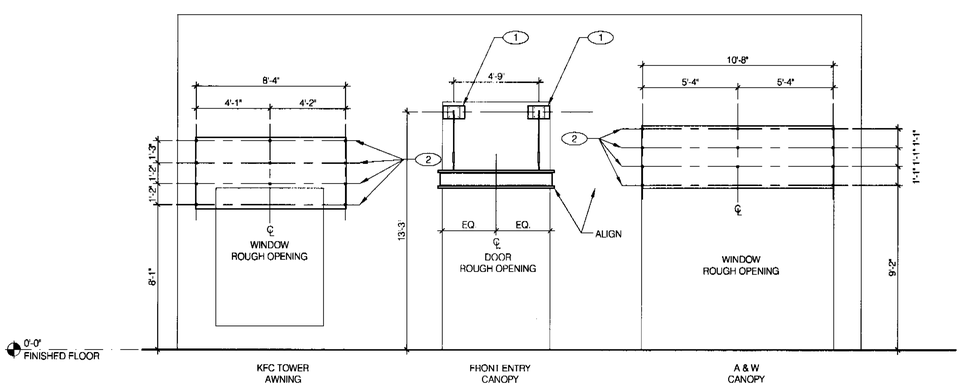

FRONT ELEVATION 1/4" = 1'-0" | **E**

1. EXTEND BLOCKING AS REQUIRED TO FIT BETWEEN STUDS.
2. FINISH BOTTOM ELEVATION OF CANOPIES SHALL BE 9'-0" U.N.O.
3. COORDINATE WITH AWNING VENDOR.
4. THIS SHEET IS TO INDICATE BLOCKING REQUIREMENTS FOR AWNINGS & CANOPIES. ADDITIONAL BLOCKING IS REQUIRED FOR OTHER ITEMS AS SHOWN ON OTHER DRAWINGS.

GENERAL NOTES | **D**

1. SOLID BLOCKING FOR FASTENERS.
2. CENTERLINE OF BLOCKING FOR AWNING SUPPORT BRACKET ATTACHMENT.
3. CENTERLINE OF BLOCKING FOR CANOPY SUPPORT BRACKET ATTACHMENT.
4. A&W SIGN PYLON. COORDINATE WITH SIGN CONTRACTOR.

CITY OF SAN JOSE
BUILDING DIVISION
B.P. #
DATE

KEY NOTES | **C**

Vincent+Murphy Incorporated

637 Fifth Avenue
San Rafael, Ca. 94901
(415) 451-2500
FAX 451-2595

LICENSED ARCHITECT
HEDGE EDWARD MURPHY
No. C17926
REN. 10/31/07
STATE OF CALIFORNIA

JOB NUMBER
H0510

SUBMITTALS

03/24/06	BLD'G PC#1 SUBMITTAL

REVISIONS

CONTRACT DATE:
BUILDING TYPE: KA60-Y04
PLAN VERSION: JAN 05 D
SITE NUMBER:
STORE NUMBER:

KFC / A&W

3144 S. BASCOM AVENUE
SAN JOSE, CA. 95124-2022

All American Food

KA60-Y04

CANOPY & AWNING BLOCKING ELEVATIONS

S5.0

W:\Data\herman\2005\H0510_san jose_bascom\03_cd_current\025_KA_Y04-S5.0.dwg modified by Dhanrigan at Jun 28, 2006 - 3:29pm

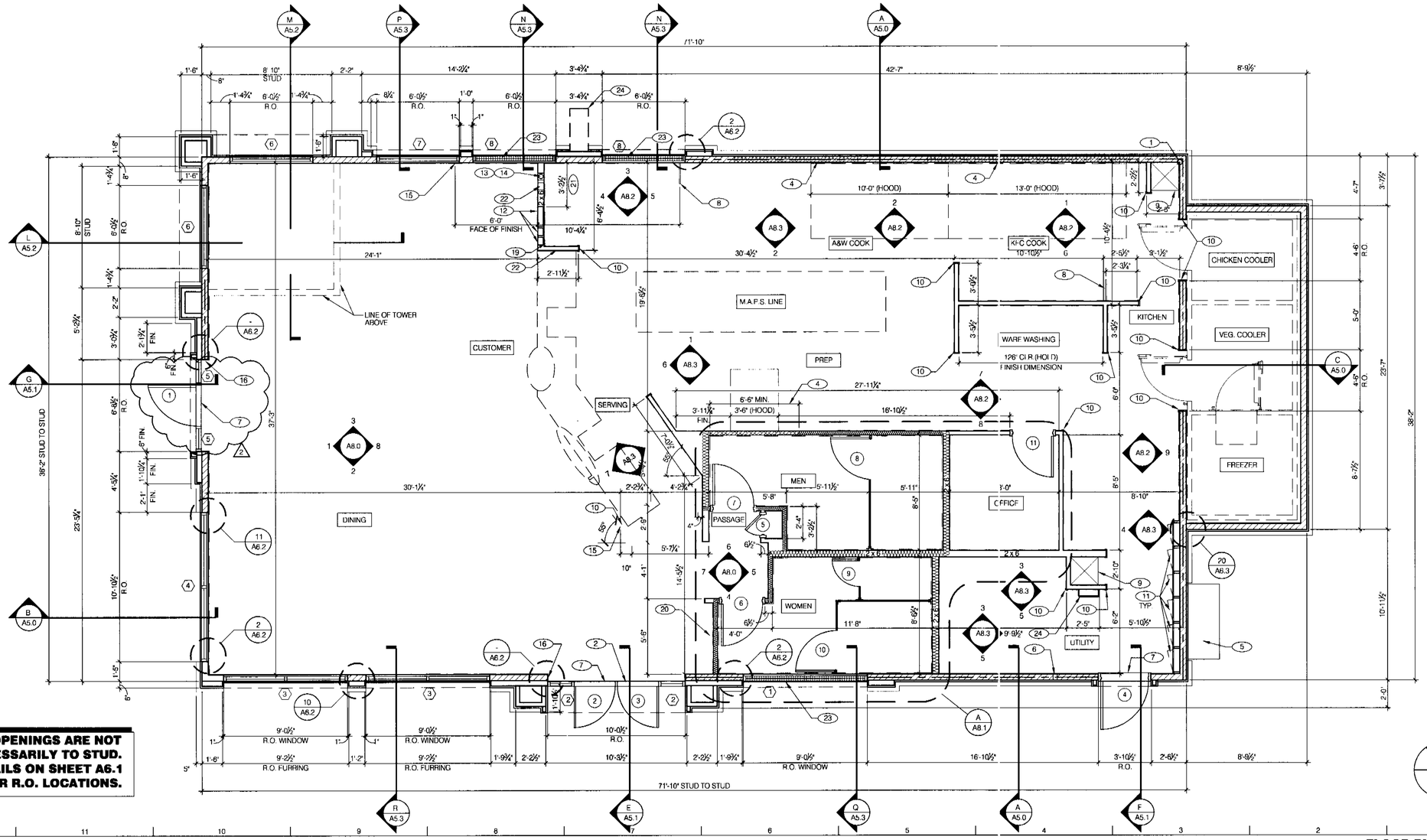

ROUGH OPENINGS ARE NOT NECESSARILY TO STUD. SEE DETAILS ON SHEET A6.1 FOR R.O. LOCATIONS.

FLOOR PLAN 1/4"=1'-0" **A**

EXTERIOR SHEAR WALL:
2x6 WD STUDS AT 16" O.C. W/ 1/2" EXTERIOR GRADE PLYWD (CDX) SHEATHING (SEE STRUCT. DWGS. FOR ADDITIONAL INFORMATION.) AND R-19 KRAFT-FACED FIBERGLASS BATT INSULATION U.O.N.
AT FRONT AND REAR WALL SURFACES: PROVIDE 1/2" CDX PLYWOOD ON INTERIOR FACE OVER ENTIRE LENGTH OF WALL SURFACE. NAIL PER SHEAR WALL REQUIREMENTS AT SECTIONS INDICATED AS SHEAR WALLS. GYP. BD. AND OTHER FINISHES SHALL BE APPLIED OVER STRUCTURAL PLYWD. WHERE OCCURS.

TYPICAL EXTERIOR WALL:
2x6 WD STUDS AT 16" O.C. W/ 1/2" EXTERIOR GRADE PLYWD (CDX) SHEATHING AND R-19 KRAFT FACED FIBERGLASS BATT INSULATION U.O.N.

TYPICAL INTERIOR WALL:
2x4 WD STUDS AT 16" O.C. (2x6 OR 2x8 WHERE NOTED). W/ 1/2" GYP. BD. SUBSTRATE U.O.N. USE MOISTURE RESISTANT GYP. BD. BEHIND ALL CERAMIC WALL TILE. U.O.N.

INTERIOR SOUND-RATED WALL:
CONSTRUCT TYPICAL INTERIOR WALL W/ 3-1/2" UNFACED FIBERGLASS BATT INSULATION.

HOODWALL:
WOOD STUDS W/ STAINLESS STL. PANEL OVER 1/2" CEMENT BOARD - SEE SCOPE OF WORK. PANEL TO COVER ENTIRE WALL FROM 18" ABOVE TOP OF HOOD DOWN TO TOP OF BASE TILE, AND EXTEND PAST ENDS OF HOOD AS REQ'D BY LOCAL JURISDICTION, MIN. 18". NO EXPOSED SCREWS/ATTACHMENTS.

DASHED LINE INDICATES SUBSTRATE LOCATION. ALL WALLS SHALL BE AS INDICATED EXCEPT FROM TOP OF SLAB TO 12" ABOVE SLAB SHALL BE 1/2" CEMENT BOARD, U.O.N. THIS NOTE DOES NOT APPLY TO EXTERIOR FACE OF EXTERIOR WALLS, AND PLYWOOD SHEAR CONDITIONS.

SPANDREL GLASS LOCATIONS. REFER TO SHEETS A4.0 AND A4.1 FOR VERTICAL LOCATIONS AND ADDITIONAL INFORMATION.

WALL LEGEND **E**

DIMENSIONS:
A. ALL DIMENSIONS ARE TO FACE OF STUD U.O.N. REFER TO FOUNDATION PLAN FOR FACE OF CONC. DIMENSIONS.
B. DIMENSIONS NOTED AS "CLEAR" OR "HOLD" ARE MIN. REQ'D. NET CLEARANCE FROM FACE OF WALL / WAINSCOT FINISH. VERIFY FINAL EQUIPMENT SIZES W/ VENDOR PRIOR TO INT. WALL FRAMING.

WINDOWS / DOORS:
A. SEE SHT. A11 FOR WINDOW TYPES AND DOOR SCHEDULE.
B. ALL DOOR AND WINDOW OPENING DIMENSIONS ARE TO ROUGH OPENING.

FINISH SUBSTRATES:
A. PROVIDE 1/2" THICK CEMENTITIOUS BD. FROM FLOOR SLAB TO 12" A.F.F. MIN. IN LIEU OF GYP. BD. AT ALL WALLS EXCEPT SHEARWALL SURFACES, U.O.N.
B. ALL JOINTS, GAPS OR SPACES LEADING TO ALL HOLLOW OR INACCESSIBLE SPACES SHALL BE SEALED WITH "NSF INTERNATIONAL" APPROVED SEALANTS.
C. ALL BACK OF HOUSE AND OFFICE WALLS SHALL HAVE 1/2" CDX PLYWOOD SUBSTRATE, U.O.N.

DECOR:
A. SEE A2.0 FOR SEATING PLAN AND DETAILS.
B. SEE A7.0 FOR FLOOR FINISHES.
C. SEE A8.0 - A8.3 FOR WALL FINISHES.
D. SEE A7.1 FOR CEILING FINISHES.

GENERAL:
A. PROVIDE THREE FIRE EXTINGUISHERS - (2) 10 lb. BC and (1) 10 lb. ABC - TO COMPLY WITH LOCAL FIRE CODE. LOCATE PER DIRECTION OF FIRE MARSHALL OR LOCAL AUTHORIZING AGENT.
B. DRAWINGS ARE BASED UPON WOOD FRAMING. UTILIZATION OF METAL STUDS ON NON-BEARING INTERIOR PARTITIONS, BULKHEADS AND SOFFITS IS ACCEPTABLE.
C. ALL ATTACHMENTS MADE THROUGH ELIFS SHALL BE BUSHED TO PREVENT DAMAGE TO THE FINISH, PER 17/A6.3.
D. ALL PENETRATIONS THROUGH ELIFS SHALL BE SEALED USING MFRS. APPROVED METHOD.

FLOOR PLAN NOTES **D**

1. STARTING POINT. ALL SUB-TRADES SHALL USE THIS POINT AS A BEGINNING LAY-OUT (INSIDE FACE OF EXT. WALL STUDS.
2. REMOVABLE MULLION AT ENTRY DOOR.
3. PIPE BOLLARD. REFER TO SITE DWGS.
4. HOOD WALL, SEE WALL LEGEND.
5. ELECTRICAL MAIN SWITCH BOARD. REFER TO ELECT. DWGS.
6. CO2 FILL BOX LOCATION.
7. METAL THRESHOLD.
8. SPLASH GUARD. SEE DETAIL 9/A6.5. INSTALLATION SHALL BE COORDINATED WITH HAND SINK INSTALLATION. PROVIDE BLOCKING @ WALL.
9. MOP SINK. REFER TO DETAIL 20/A6.5. EXTEND FLOOR TILE (OVER CEMENT BD.) UP WALLS +48".
10. S.S. CORNER GUARD / WALL CAP, TYP. ALL CORNERS IN BACK-OF-HOUSE FROM REAR WALL TO THE KITCHEN SIDE OF THE SERVICE COUNTER. SEE DETAIL 19/A6.5.
11. ELECT. PANELS IN 2x6 FURRED-OUT WALL. REFER TO ELECT. DWGS. & DETAIL 16/A6.4
12. LOCATIONS OF EQUIPMENT RECESSED IN WALL. SEE SHEET A2.0 AND DETAIL 14/A6.4
13. 4" Ø PVC CHASE IN WALL. SEE DETAIL 19/A6.4.
14. 6"x6" HORIZONTAL OPENING FOR SYRUP TUBES. COORDINATE WALL PENETRATION WITH COUNTER INSTALLER. SEAL CHASE TO COUNTER. SEE 19/A6.4.
15. START OF CHAIR RAIL.
16. CONTINUE CHAIR RAIL INTO JAMB - TYPICAL.
17. DIMENSIONS IN THIS STRING ARE TO FINISH SURFACE.
18. LIGHTING CONTROL PANEL. REFER TO ELECT. DWGS.
19. 6" Ø PLASTIC A&W SYRUP TUBE BUNDLE. SEE SCOPE OF WORK.
20. BOOSTER CHAIR COUNTER. SEE DETAIL 2/A6.5.
21. KEEP CLEAR FOR UTILITIES & SYRUP LINES. SEE DETAIL 14/A6.4 FOR STUD LAYOUT REQUIREMENTS.
22. 6" Ø PVC HORIZONTAL SLEEVE, TOP @ +24" A.F.F. FOR SYRUP TUBES. COORDINATE WALL PENETRATION WITH COUNTER INSTALLER. SEAL CHASE TO COUNTER. SEE 20/A6.4
23. SPANDREL GLASS WINDOW/ WALL.
23. ROOF ACCESS LADDER. SEE DETAILS 8/A6.0 & 20/A6.0.
24. SIGN FIN (N.I.C.) BY SIGN COMPANY.
25. 2X4 FURRING W/ FIRE BLOCKING AT 10' MAX. SEE DETAIL 13/A7.0.

KEY NOTES **B**

Vincent+Murphy Incorporated
637 Fifth Avenue
San Rafael, Ca. 94901
(415) 451-2500
FAX 451-2595

LICENSED ARCHITECT HUGH EDWARD MURPHY No. C17928 10/31/07 STATE OF CALIFORNIA

JOB NUMBER
H0510

SUBMITTALS

03/24/06	BLD'G PC#1 SUBMITTAL

REVISIONS

2	05/26/06 P.C. RESPONSE #2

CONTRACT DATE:
BUILDING TYPE: KA60-Y04
PLAN VERSION: JAN 05 D
SITE NUMBER:
STORE NUMBER:

KFC / A&W

3144 S. BASCOM AVENUE
SAN JOSE, CA. 95124-2022

KA60-Y04

FLOOR PLAN

A1.0

W:\Data\bornan\2005\H0510_san jose_bascom\03_cd_current\026_KA_Y04-A1_0.dwg modified by bhamigan at Jun 26, 2006 - 3:28pm

1. DIMENSIONS ON THIS DWG. ARE TO FRAME EDGE. REFER TO SHEETS A1.0 AND A5 SHEETS FOR ROUGH OPENING DIMENSIONS.
2. ENTIRE STOREFRONT SYSTEM SHALL BE DARK BRONZE ANODIZED.
3. ALL SPANDREL GLASS SHALL BE DARK BRONZE TO MATCH FRAMES.
4. SEE SCHEDULE FOR GLASS TYPES.
5. REFER TO FLOOR PLAN, ELEVATIONS AND WALL SECTIONS FOR ROUGH OPENING DIMENSIONS.
6. ALL STOREFRONT MATERIAL AND GLAZING SHALL BE SUPPLIED AND INSTALLED BY G.C. U.O.N.

GLASS SCHEDULE

- (A) 1" INSULATED GLASS (LOW E TYPE)
- (B) 1" INSULATED TEMPERED GLASS (LOW E TYPE)
- (C) 1/4" SAFETY GLASS
- (D) 1" INSULATED SPANDREL GLASS
- (E) 1/4" SPANDREL GLASS
- (F) 1/4" TEMPERED, SPANDREL GLASS
- (G) QUILTED S.S. PANEL: 1" THICK PANEL ASSEMBLED WITH STAINLESS STEEL & RIGID INSULATION BOARD. STAINLESS PANEL SHALL BE 20GA. #8 MIRROR FINISH W/4 $\frac{3}{4}$x4 $\frac{3}{4}$" 45° QUILTING PATTERN. SEE 6A7/A6.2

STOREFRONT NOTES

1. LOW 'E' GLASS SHALL BE PPG "SOLARBAN 60 (CLEAR)" OR APPROVED EQUAL.
2. STOREFRONT SECTION SHALL BE 2"x 4 1/2". REFER TO DWG A4 FOR EXTERIOR FINISH.
3. STOREFRONT DIMENSIONS ARE TO FRAME EDGE. REFER TO FLOOR PLAN, ELEVATIONS AND SECTIONS FOR ROUGH FRAMING DIMENSIONS.

NOTES N.T.S. | 7

REFERENCE NOTES:

1. LAMINATE DOORS 5, 6, 7 & 11 AND PAINT FRAMES 4, 5, 6, 7 & 11.
2. ALL HARDWARE SHALL BE US32D U.O.N.
3. ALL HM FRAMES SHALL BE 16 GA STEEL U.O.N.
4. ALL LOCKS SHALL BE FALCON 6 PIN INTERCHANGEABLE CORE SUPPLIED AND INSTALLED BY THE G.C. ALL EXTERIOR LOCKS SHALL BE PROVIDED WITH CONSTRUCTION CORES. ALL PERMANENT CORES SHALL BE KEYED ALIKE.
5. PERMANENT CORES SHALL BE SHIPPED TO THE RESTAURANT GENERAL MANAGER.
6. MOUNT DOOR CLOSERS ON RESTROOM OR KITCHEN SIDE ONLY.
7. COMPLETE DOOR, FRAME AND HARDWARE PACKAGE INCLUDING: VISION PANEL (WITH 18 GA. HOLLOW METAL FRAME), CONTINUOUS HINGE, HEAVY DUTY CLOSER, RAIN DRIP, DOOR BOTTOM/ SWEEP, WEATHERSTRIP, KICKPLATE AND PANIC HARDWARE. ORDERED THRU LOCKNET SECURITY DOORS, PART #DU3670L52VED (1-800-867-4307).
8. PROVIDE PUSH/ PULL PLATES.

   IF REQUIRED BY LOCAL CODE, STOREFRONT DOOR PANIC HARDWARE SHALL BE: DOR-O-MATIC 2092 RIM PANIC HARDWARE AND EXTERIOR PULLS WITH QUALITY #520 DOOR PULL.
9. MOUNT KICKPLATE ON PUSH SIDE ONLY.
10. MAXIMUM DOOR OPERATING PRESSURE : 5 LBS INTERIOR, 5 LBS EXTERIOR. (1)
11. ADA COMPLIANT ACCESSIBILITY SIGNAGE (OR AS REQUIRED BY LOCAL JURISDICTION) - (1) MEN; (1) WOMEN
12. RESTROOM SIGN REQUIRED.
13. REMOVABLE MULLION.
14. FRAMES SHALL BE PAINTED. SEE FINISH SCHEDULE SHT A7.2
15. BOBRICK 1080 SERIES, WITH STAINLESS STL. 1 1/2" WALL POST, LATCH, KEEPER, COAT HOOK & MOUNTING BRACKETS. INSTALL PER MANUFACTURER'S SPECIFICATIONS & DETAILS. DOOR HANDLE AND LATCH SHALL BE MOUNTED AT 36" A.F.F.
16. POST SIGN "MAXIMUM OCCUPANCY LOAD 60" ABOVE DOOR NO. 1 IN LEGIBLE LETTERS THAT CONTRAST TO BACK GROUND PER FIRE DEPARTMENT REQUIREMENTS. (2)
17. PROVIDE EXIT SIGN PER DETAIL 2/ T1.1.

DOOR SCHEDULE NOTES | 1

Vincent+Murphy Incorporated

637 Fifth Avenue
San Rafael, Ca. 94901
(415) 451-2500
FAX 451-2595

LICENSED ARCHITECT EDWARD MURPHY No. C17928 REN. 10/31/07 STATE OF CALIFORNIA

JOB NUMBER H0510

DOOR NO.	DOOR SIZE		TYPE	DOOR	FRAME	BUTTS 1	BUTTS 2	BUTTS 3	BUTTS 4	LOCKS 1	LOCKS 2	LOCKS 3	LOCKS 4	LOCKS 5	LOCKS 6	CLOSERS 1	CLOSERS 2	CLOSERS 3	KICKPLATE 1	KICKPLATE 2	KICKPLATE 3	KICKPLATE 4	THRESHOLD 1	THRESHOLD 2	THRESHOLD 3	THRESHOLD 4	DOOR STOP 1	DOOR STOP 2	DOOR STOP 3	PUSH	PULL	MISCELLANEOUS 1	MISCELLANEOUS 2	MISCELLANEOUS 3	MISCELLANEOUS 4	MISCELLANEOUS 5	MISCELLANEOUS 6	DETAIL LOCATIONS HEAD	JAMB	SILL	DOOR NOTES
			SEE DOOR TYPE ELEVATIONS			ONE PAIR OF SELF PIVOTS PER DOOR MANUFACTURER. TOP & BOTTOM	1 1/2 PR McKINNEY #TA2731, 4 1/2" x 4 1/2"	CONT. HINGE INCLUDED IN PACKAGE	H.D. TYPE 304 S.S. BOBRICK SPRING LOADED	FALCON #T561 CLOSET LOCK	FALCON #T561 DG WC	FULL LENGTH LATCH PROTECTOR INCL. IN PKG.	PANIC HARDWARE INCLUDED IN PACKAGE	FALCON CORE 7 PIN CORE REQUIRED		BOBRICK LATCH & KEEPER	I.D.C. 685-P	CLOSER INCLUDED IN PACKAGE	I.D.C. 632-P	STAINLESS STEEL 10" x .050 X 2" L I.D.W. *	KICKPLATE INCLUDED IN PACKAGE			ACCESSIBLE ALUM. THRESHOLD BY DOOR MFR	THRESHOLD INCLUDED IN PACKAGE			FLOOR STOP - ROCKWOOD 441 CU	HINGE STOP - ROCKWOOD 532 NP	WALL STOP - ROCKWOOD 409	PUSH PLATE ROCKWOOD 70S - 8" x 18"	PULL PLATE ROCKWOOD 70C x 10" - 4" x 18"	STD. ADJUSTABLE DOOR SWEEP PER DR. MFR.	SWEEP (VISTA 231 STD) NGP 101VA	UNDERCUT 3/4"	PROVIDE A SIGN STATING THIS DOOR TO REMAIN UNLOCKED DURING BUSINESS HOURS*	COAT HOOK - BOBRICK	DOOR SIGN				* LESS THAN DOOR WIDTH
1	3'-0" x 7'-0" x 1-3/4"		A	AL	AL	X											X						X									X		X						12/A6.2	8, 10, 16, 17
2	3'-0" x 7'-0" x 1-3/4"		B	AL	AL	X											X						X									X		X						12/A6.2	8, 10, 13, 17
3	3'-0" x 7'-0" x 1-3/4"		B	AL	AL	X											X						X									X		X						12/A6.2	8, 10, 13
4	3'-6" x 7'-0" x 1-3/4"		C	HM	HM			X				X	X					X			X				X			X				X						19/A6.2	19/A6.2	20/A6.2	6, 7, 10, 17
5	1'-6" x 6'-8" x 1-3/4"		D	WD	HM		X			X																			X					X					11/A6.4	11/A6.4		14
6	3'-0" x 6'-8" x 1-3/4"		D	WD	HM		X												X	X								X			X	X		X			X		11/A6.4	11/A6.4		6, 9, 10, 11, 12, 14
7	3'-0" x 6'-8" x 1-3/4"		D	WD	HM		X												X	X								X			X	X		X			X		11/A6.4	11/A6.4		6, 9, 10, 11, 12, 14
8	3'-0" x 4'-8" x 3/4"		F	-	-				X							X													X								X				15
9	2'-4" x 4'-8" x 3/4"		F	-	-				X							X													X								X				15
10	3'-0" x 4'-8" x 3/4"		F	-	-				X							X													X								X				15
11	3'-0" x 6'-8" x 1-3/4"		E	WD	HM		X				X								X									X						X					11/A6.4	11/A6.4		9

DOOR SCHEDULE | 2

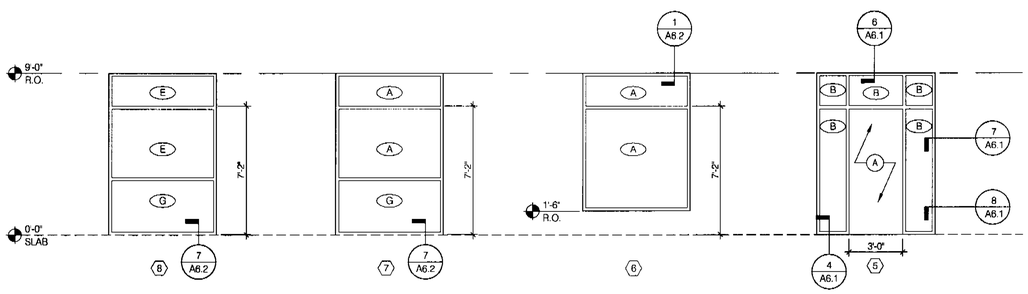

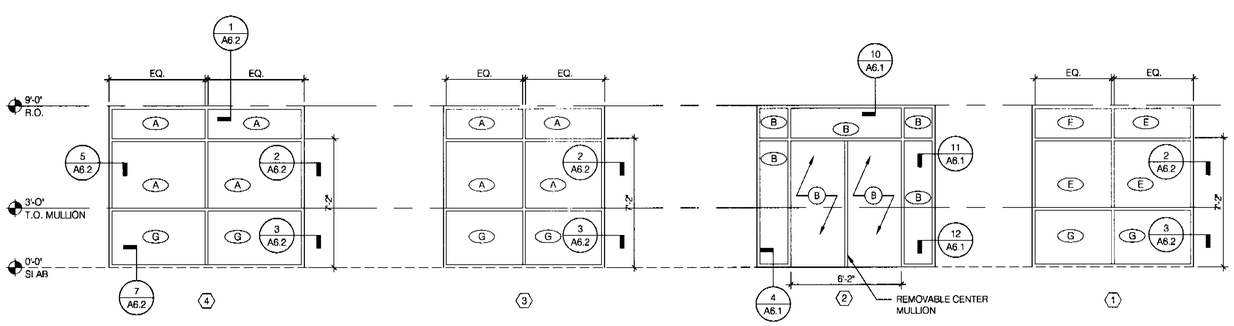

NOTE: ELEVATIONS DRAWN AS VIEWED FROM EXTERIOR OF BUILDING.

WINDOW TYPES 1/4" = 1'-0" | 9

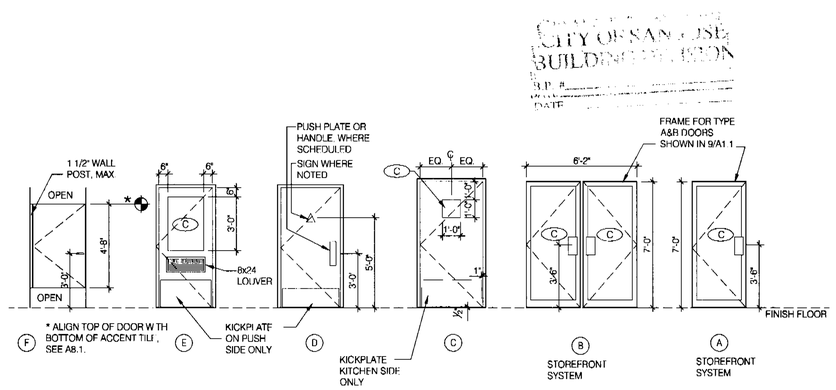

NOTE: ELEVATIONS DRAWN AS VIEWED FROM EXTERIOR OF BUILDING OR OUTSIDE ROOM

DOOR TYPES 1/4" = 1'-0" | 3

CITY OF SAN JOSE BUILDING DIVISION

SUBMITTALS

03/24/06	BLD'G PC#1 SUBMITTAL

REVISIONS

1	04 / 28/ 06	P.C. RESPONSE #1
2	05 / 26/ 06	P.C. RESPONSE #2

CONTRACT DATE:
BUILDING TYPE: KA60-Y04
PLAN VERSION: JAN 05 D
SITE NUMBER:
STORE NUMBER:

KFC / A&W

3144 S. BASCOM AVENUE
SAN JOSE, CA. 95124-2022

All American Food

KA60-Y04

DOOR & WINDOW ELEVATIONS AND SCHEDULES

A1.1

W:\Data\barnon\2005\H0510_san jose_bascom\03_cd_current\027_KA_Y04-A1_1.dwg modified by Dbarnigan at Jun 26, 2006 - 3:29pm

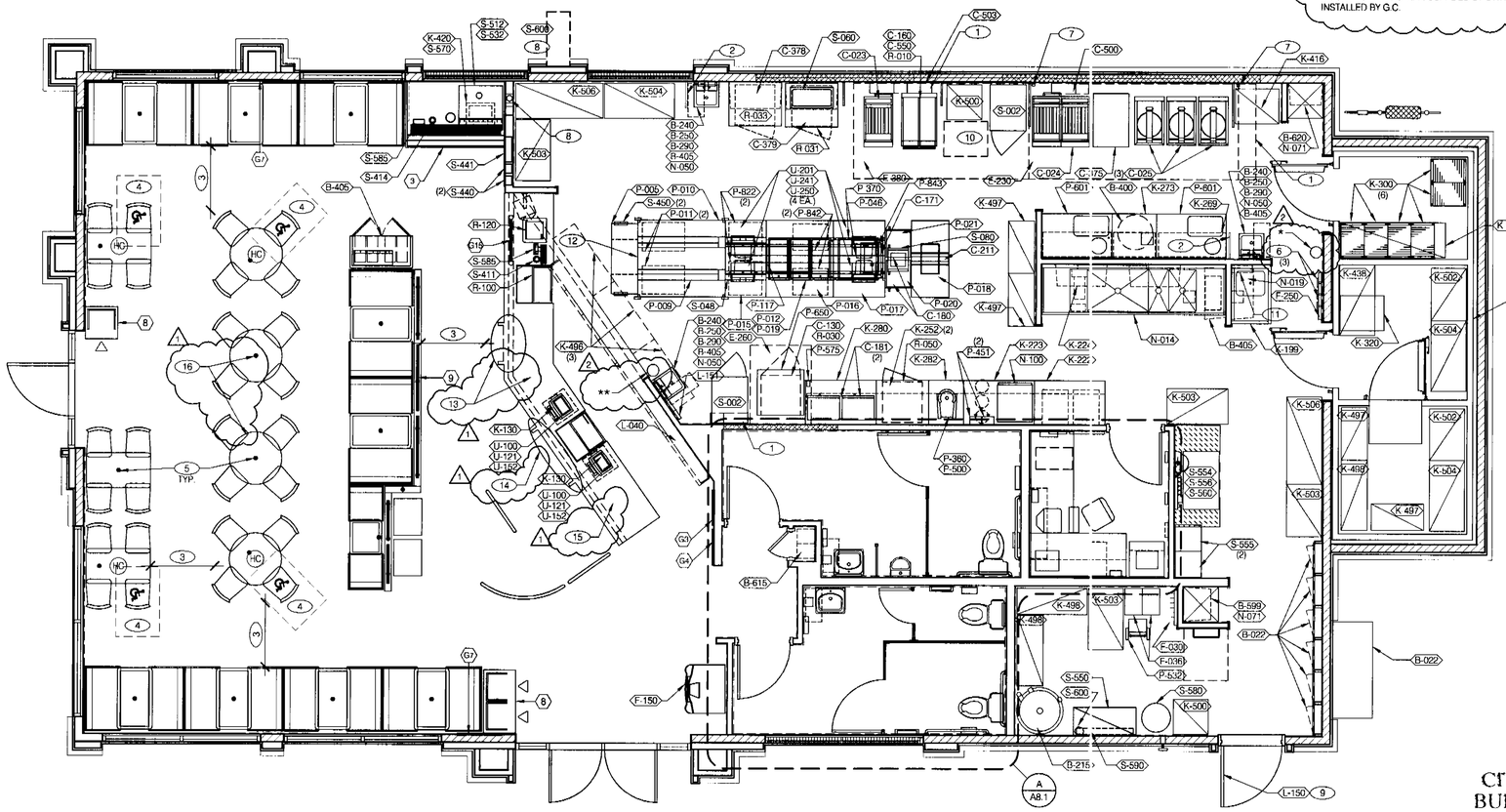

* FIRE EXTINGUISHER: K - CLASS ANSUL 3/2929 6 LITER K - CI ASS. MOUNT TOP AT 4'-0" AFF. SUPPLIED BY OWNER, INSTALLED BY G.C.

** FIRE EXTINGUISHER: ABC ANSUL 3/2817 7-½ DIA. X 23" H. MOUNT TOP AT 4'-0" AFF. SUPPLIED BY OWNER, INSTALLED BY G.C.

CITY OF SAN JOSE
BUILDING DIVISION
B.P. #_____
DATE_____

REF. NORTH

EQUIPMENT/SEATING PLAN 1/4"=1'-0" **A**

⟨X⟩	QTY.	ITEM	REMARKS
1	1	SERVING COUNTER	INCLUDES KNEE WALL
2	2	QUEUE RAILING	SEE DETAIL 7/A6.5, SIMILAR FOR CORE DRILL
3	1	SELF-SERVE DRINK COUNTER	--
4	1	CONDIMENT COUNTER	--
5	1 SET	TABLE PACKAGE	INCLUDES TABLES, FRAMES, BANQUETTE, BOOTH IS [5% (3 SEATS) SHALL BE ACCESSIBLE
6	1 SET	CHAIR PACKAGE	--
7	1	DIVIDER WALL	--
8	2	TRASH RECEPTACLE/TRAY RETURN-DOUBLE	--
9	1	SEATING WALL	--
	1 SET	ARTWORK PACKAGE	REFER TO PLAN AND SCHEDULE (THIS SHEET) AND INTERIOR ELEVATIONS SHEETS A8.0 & A8.1 FOR LOCATIONS

SEATING PACKAGE - BY SEATING VENDOR U.O.N. (TOTAL SEATS = 60) **E**

⟨X⟩	QTY.	ITEM	REMARKS
G1	1	A&W WALL MURAL	SEE A8.0 FOR LOCATION
G2	1	KFC WALL MURAL	SEE A8.0 FOR LOCATION
G3	1	KFC WELCOME ART	SEE A8.0 FOR LOCATION
G4	1	A&W WELCOME ART	SEE A8.0 FOR LOCATION
G5	1	A&W POUR SHOT LIGHT BOX	SEE A8.0 FOR LOCATION
G7	1	A&W NOSTALGIC SIGN	SEE A8.0 FOR LOCATION
G8	1	KFC NOSTALGIC SIGN	SEE A8.0 FOR LOCATION
G9	1	KFC RESTROOM FRAMED ART	SEE A8.1 FOR LOCATION
G10	1	KFC RESTROOM FRAMED ART	SEE A8.1 FOR LOCATION
G11	1	A&W RESTROOM FRAMED ART	SEE A8.1 FOR LOCATION
G12	1	A&W RESTROOM FRAMED ART	SEE A8.1 FOR LOCATION
G13	1	A&W NEON WALL CLOCK ***	SEE A8.0 FOR LOCATION
G15	1	FLOAT COUNTER MUG GRAPHICS **	SEE A8.0 FOR LOCATION
G16	1	FLOAT COUNTER WORD GRAPHICS **	SEE A8.0 FOR LOCATION
G17	1	NUTRITION POSTER *	SEE A8.0 FOR LOCATION

ARTWORK SCHEDULE **D**

⟨X⟩	QTY.	ITEM	REMARKS

* THE NUTRITION MATERIALS (ACRYLIC HOLDER, NUTRITION POSTER AND BRAND NUTRITION BROCHURES) ARE PART OF A NEW RESTAURANT'S GRAND OPENING KIT AND ARE PROVIDED BY YUM FORMS

** THESE ITEMS ARE PURCHASED BY THE SEATING PACKAGE VENDOR AND COME PRE-MOUNTED TO SEATING PACKAGE COMPONENTS

***THE A&W CLOCK IS BY IMAGE TIME AND NOT PART OF THE MMT PACKAGE

GENERAL NOTES **C**

1. HOOD FIRE SUPPRESSION SYSTEM (ANSUL R-102)
2. SPLASH GUARDS SEE A1.0.
3. MAINTAIN 44" MIN CLEAR AISLE EXIT PATHS TO EXIT DOORS
4. 30" x 48" CLEAR FLOOR SPACE FOR HANDICAP ACCESS. TABLE HEIGHT IS 30" A.F.F.
5. DOT INDICATES CORE DRILL LOCATION. CORE DRILL LAYOUT TO BE PROVIDED BY THE SEATING VENDOR. SEE DETAIL 7/A6.5 AND SCOPE OF WORK.
6. (3) PULL STATIONS @ 3'-8" A.F.F.
7. GAS LINE DOWN TO EQUIPMENT.
8. COORDINATE LOCATION OF HORIZ PVC SYRUP CHASE THROUGH WALL TO COUNTER.
9. SEE SHEET A1.1 FOR SECURITY DOOR PACKAGE.
10. BREAD RACK BY BRHAD VENDOR.
11. SAUCE DISPENSING BRACKET.
12. THIS EQUIPMENT IS IN TEST. APW & HENNY PENNY PROVIDE ELEVATORS THAT PERFORM EQUALLY AND ARE FUNCTIONALLY EQUIVALENT. NEITHER SUPPLIER IS PRE-BRED FOR THIS APPLICATION. REFERENCE EQUIPMENT SCHEDULE AND DISTRIBUTOR MODEL FOR ADDITIONAL INFORMATION.
13. COUNTER HEIGHT IS 34" A.F.F.
14. ORDER COUNTER IS 42" A.F.F.
15. ORDER COUNTER IS 34" A.F.F.
16. (2) TABLES AT 42" A.F.F. REMAINDER AT 30" A.F.F.

KEYNOTES **B**

Vincent+Murphy Incorporated

637 Fifth Avenue
San Rafael, Ca. 94901
(415) 451-2500
FAX 451-2595

LICENSED ARCHITECT EDWARD MURPHY No. C17928 EXP. 10/31/07 STATE OF CALIFORNIA

JOB NUMBER
110510

SUBMITTALS

03/24/06	BLD'G PC#1 SUBMITTAL

REVISIONS

1 04/28/06	P.C. RESPONSE #1
2 05/26/06	P.C. RESPONSE #2

CONTRACT DATE:
BUILDING TYPE: KA60-Y04
PLAN VERSION: JAN 05 D
SITE NUMBER:
STORE NUMBER:

KFC / A&W

3144 S. BASCOM AVENUE
SAN JOSE, CA. 95124-2022

KA60-Y04

EQUIPMENT AND SEATING PLAN

A2.0

W:\Data\barmon\2005\110510_san jose_bascom\03_cd_current\023_KA_Y04-A2_0.dwg modified by bhenrigan at Jun 26, 2006 - 4:18pm

EQUIPMENT SCHEDULE

NO.	QTY	G.C. INST.	ITEM DESCRIPTION	MFR. & MODEL NUMBER	PLUMB	ELECT	GAS	REMARKS	NO.
			B CONTRACTOR BUILDING ELEMENTS						
B-022	1	X	SWITCHGEAR PACKAGE	SQUARE-D		X		INCLUDES BRANCH PANELS	B-022
B-140	1	X	DRIVE-THRU WINDOW	QUICKSERV #SC-4030BR				BRONZE ANODIZED	B-140
B-215	1	X	WATER HEATER	BRADFORD WHITE #EF-100T-199E-3N(A)	X	X	X	WITH CONCENTRIC VENT KIT	B-215
B-221	3	X	TOILET SEAT COVER DISPENSER	BOBRICK B-221				SURFACE MOUNTED	B-215
B-240	5	X	SOAP DISPENSER (WALL MOUNT)	KAY3675				SURFACE MTD	B-240
B-250	3	X	SANITIZER DISPENSER	KAY3675				NOTE: KAY 3675 DISPENSER USED FOR SOAP & SANITIZER	B-250
B-265	2	X	MIRROR, 18" X 36"	BOBRICK #B-165-1836				SURFACE MTD	B-265
B-280	3	X	TOILET PAPER DISPENSER	BOBRICK#B-2890				SURFACE MTD	B-280
B-290	5	X	PAPER TOWEL DISPENSER	BOBRICK #B-262					B-290
B-300	2	X	GRAB BAR 1-1/2"DIA X 36" S.S. FIN.	BOBRICK #B6806X36				SURFACE MTD	B-300
B-305	2	X	GRAB BAR 1-1/2"DIA X 42" S.S. FIN.	BOBRICK #B6806X42				SURFACE MTD	B-305
B-400	3	X	WASTE BASKET - 32 GALLON	RUBBERMAID #2632 (GREY)					B-400
B-405	11	X	WASTE BASKET	RUBBERMAID SLIM JIM #3541 (GREY)					B-405
B-410	2	X	SANITARY NAPKIN RECEPTACLE	BOBRICK 353 RECESSED				INCLUDES ACCESSORY KIT & MOUNTING HARDWARE	B-410
B-599	1	X	MOP SINK STATION	ISS #WST806Y					B-599
B-615	1	X	CLOSET RACK	ISS #WST804Y					B-615
B-620	1	X	CHICKEN MOP SINK STATION	ISS #MOPCHICKMB					B-620
			C COOKING EQUIPMENT						
C-023	1	X	SINGLE OPEN FRYER W/ CONTROLLER	PITCO #SGF18WKS		X	X	USE GAS HOSE KIT #C-503	C-023
C-024	1	X	DUAL OPEN FRYER W/ CONTROLLER	PITCO #SGF18-2WKS W/ KIT		X	X	USE GAS HOSE C-500	C-024
C-025	3	X	6 HEAD FRYER	WINSTON # E40404103		X			C-025
C-130	1	X	CONVECTION OVEN W/ CONTROLLER	BLODGETT #CTBRAP		X			C-130
C-160	1	X	ELECTRIC CLAMSHELL GRILL W/ 2 PLATENS	TAYLOR #QS23, 208/60/3		X		W/ STAND	C-160
C-171	1	X	HOT DOG GRILL	AJ ANTUNES #HDC70		X		CURRENTLY UNDER A FIELD VALIDATION PROGRAM	C-171
C-180	2	X	MICROWAVE OVEN 1800W	AMANA #HDC18		X			C-180
C-181	2	X	MICROWAVE OVEN 2700W	AMANA #KFC2		X			C-181
C-211	1	X	BUN TOASTER, M.A.P.S.	PRINCE CASTLE #296 T14-YUM		X		W/ 1 TEFLON SHEET KIT (CURRENTLY UNDER A FIELD VALIDATION PROGRAM)	C-211
C-375	1	X	FRYER LANDING TABLE 24" X 30"	ISS #536FRYACCMBA					C-375
C-378	1	X	FRYER LANDING STATION 36" X 36"	ISS #WST791E					C-378
C-379	1	X	OPEN BASE WORKSTATION 30" x 36"	ISS #WST792F					C-379
C-500	1	X	GAS HOSE KIT 1"	DORMONT MFG. #16100KIT-BS48				FOR #C-024	C-500
C-503	1	X	GAS HOSE KIT 3/4"	DORMONT #1675BPQBS48				FOR #C-023	C-503
			E EXHAUST HOODS/FIRE SUPP.						
E-230	1	X	KFC HOOD	GEN. VENTILATION		X		SEE HOOD MFR. DRAWINGS (INCLUDES PRE-PIPING)	E-230
E-260	1	X	CONVECTION OVEN HOOD, TYPE 2	GEN VENTILATION		X		SEE HOOD MFR. DRAWINGS (INCLUDES PRE-PIPING)	E-260
E-380	1	X	A&W HOOD	GAYLORD		X		SEE HOOD MFR. DRAWINGS (INCLUDES PRE-PIPING) CURRENTLY UNDER A FIELD VALIDATION PROGRAM	E-380
			F OFFICE/EMPLOYEE/MUSIC/MISC.						
F-008	1	X	FILE CABINET (2 DRAWER HIGH)	LOUISVILLE MILL. HON #R532PL					F-008
F-019	1	X	CHAIR - OFFICE	HON #5831					F-019
F-030	1	X	COAT HOOKS	ISS #HOOK246R2Y					F-030
F-036	2	X	EMPLOYEE LOCKERS	STORAGE SOLUTIONS #P9902				WALL LOCKERS MOUNTED 6" (CLR.) A.F.F.	F-036
F-040	1		OFFICE COMPUTER	POS PROVIDED		X			F-040
F-050	1		ALTERNATE PAYMENT ROUTER BOX	YUM		X			F-050
F-060	1		MONITOR-OFFICE	YUM		X			F-060
F-080	1		OFFICE PRINTER/ COPIER/ FAX/ SCANNER	POS PROVIDED		X			F-080
F-090	1		UPS (UN-INTERUPTABLE POWER SUPPLY)	POS PROVIDED		X		LOCAL LEASE (DIFFERENT REQ. IF USED WITH JUKE BOX).	F-090
F-131	1		MUSIC SYSTEM	MUZAK #6848, LOCAL LEASE		X		W/ (4) INT. SPEAKERS & (2) EXT. SPEAKERS	F-131
F-150	1	X	JUKE BOX	ROCK-OLA BUBBLER #BJUKEBOX		X		W/100 CD PACKAGE	F-150
F-170	1	X	SAFE WITH AUDIT LOCK	FIREKING #BSD2920AAXRKF		X			F-170
F-211	1	X	CLOCK	EQUITY TIME #87720					F-211
F-231	1	X	VIDEO TRAINING UNIT	FUNAI #SC313D		X		REQ. SECURITY KIT, DUST COVER & VIDEO HEAD CLEANER	F-231
F-250	1	X	TACTICS (BIG 7) BOARD WITH BSC, 32"W x 24" H	FOODSERVICE SUPPLY #90432					F-250
F-270	1	X	FIRST AID KIT	SWIFT #68-UFPC					F-270
F-341	1	X	VIDEO TRAINING UNIT WORKSTATION 24"x24"	ISS #2424MOT1EA					F-341
F-452	2	X	BABY CHANGING STATION	SAFE-STRAP COMPANY #4399					F-452
F-505	2	X	STACKABLE HIGH CHAIR	MARSTON #C-30-N (NATURAL OAK)					F-505
F-915	2	X	FLOOR MAT 3' x 5'	ENTRANCE, INC. #41150012					F-915
F-916	1	X	FLOOR MAT 4' x 6'	ENTRANCE, INC. #4 x 6ENT					F-916
			K WORKSTATIONS/SHELVING/CARTS						
K-130	2	X	MOBILE FRONT COUNTER CART 18"X24"	ISS #FC1824ZMYA					K-130
K-199	1	X	PREP SINK WORKSTATION 36"L	ISS #WST756Y					K-199
K-222	1	X	MUGCART WORKSTATION, 48.5"W x 30.5"D x 36"T	ISS #WST786E					K-222
K-223	1	X	MUGWASH WORKSTATION, 48.5"W x 30.5"D x 36"T	ISS #WST763E					K-223
K-224	1	X	3 COMP. SINK WORKSTATION, 96"L	ISS #WST806Y					K-224
K-252	1	X	36" UCR WORKSTATION	ISS #WST782F					K-252
K-269	1	X	BREADER WORKSTATION	ISS #WST759Y					K-269
K-273	1	X	BREADING WORK TABLE	ISS #WST759YA					K-273
K-280	1	X	MICROWAVE WORKSTATION, 48"	ISS #WST760E					K-280
K-282	1	X	MIXER WORKSTATION	ISS #WST757E					K-282
K-300	6	X	CHICKEN DOLLY	YESS #PE8406S					K-300
K-320	1	X	SALAD DOLLY	APW/AMERICAN WYOTT #21639000					K-320
K-416	1	X	FRYER ACCESSORY WORKSTATION 24" x 30"	ISS #WST761YA					K-416
K-420	1	X	CARBONATOR PLATFORM SHELF 18" X 24"	ISS #WST34Y					K-420
K-438	1	X	VEGGIE MODULE, 24" X 48"	ISS #WST805Y					K-438
K-439	1	X	CHICKEN THAWING MODULE	ISS #WST798Y					K-439
K-496	3	X	BULKHEAD SHELF 18" x 48" x 15" (1 TIER)	ISS #BHWS1848Y				MOUNTED AT +7'-0" A.F.F. (AT BOTTOM OF LOWER BRACKET)	K-496
K-497	4	X	SHELVING UNIT 18" x 36" x 74" (4 TIER)	ISS #SU183674Y					K-497
K-498	3	X	SHELVING UNIT 18" x 48" x 74" (4 TIER)	ISS #SU1848/4Y					K-498
K-500	2	X	SHELVING UNIT 24" X 24" X 74"H (4 TIER)	ISS #SU2424/4Y					K-500
K-502	2	X	SHELVING UNIT 24" X 36" X 74"H (4 TIER)	ISS #SU2436/4Y					K-502
K-503	2	X	SHELVING UNIT 24" X 42" X 74"H (4 TIER)	ISS #SU2442/4Y					K-503
K-504	2	X	SHELVING UNIT 24" X 48" X 74"H (4 TIER)	ISS #SU2448/4Y					K-504
K-506	2	X	SHELVING UNIT 24" x 60" x 74"H (4 TIER)	ISS #SU2460/4Y					K-506
			L LIGHTING/SIGNAGE/MENUBOARDS						
L-040	1	X	INTERIOR MENU BOARD PACKAGE	POSTERLOID				SEE SCOPE OF WORK	L-040
L-150	1	X	SECURITY DOOR DANGER SIGN	ADVFRCO #ADVCUSTOM				ORDERED DIRECT FROM YRFS	L-150
L-151	1	X	CHAMPS BOARD 31"W x 23"H						L-151
			N SINKS/DISHWASHERS						
N-014	1	X	3-COMP POWER SOAK 108"l x 34"D	METCRAFT #200PSB108L1P	X	X		W/ T & S B-2466 FAUCET & SPRAY RINSE	N-014
N-019	1	X	1 COMP PREP SINK 40"W X 27"D X 37"H	ADVANCE TABCO #9412418L	X			W/ T & S B-2463 FAUCET	N-019
N-050	3	X	HAND SINK (KITCHEN)	ADVANCE TABCO 7 YUM 20	X			W/ T& S FAUCET B-2456 & FOOT PEDAL B-0507	N-050
N-071	2	X	MOP SINK FAUCET	T&S #B665BS1H	X				N-071

EQUIPMENT SCHEDULE

NO.	QTY	G.C. INST.	ITEM DESCRIPTION	MFR & MODEL NUMBER	PLUMB	ELECT	GAS	REMARKS	NO.
N-100	1	X	MUG WASHER	HOBART #LX(H-4	X	X			N-100
			P FOOD PREPARATION						
P-005	1	X	18" x 48" POST PACK STATION	ISS #1503DIA					p-005
P-009	1	X	60" HEATED DISPLAY UNIT/DOUBLE	HENNY PENNY HCW-5 (#EO5191080)	X	X			P-009
P-010	1	X	MAPS2/BASE UNIT TABLE	APW WYOTT 60BU (#4871000)				60"W 52.5"D 36"H, W/ 4 STAIN LINER BOXES	P-010
P-011	2	X	MOBILE HEATED DRAWER/SINGLE	TOASTMASTER 3A81D		X		29 3/16"W 19 7/16"D 15"H	P-011
P-012	1	X	CONDIMENT HOLDER UNDERSHELF	APW #4817-20				CURRENTLY UNDER A FIELD VALIDATION PROGRAM	P-012
P-015	1	X	FRY DUMP KFC M.A.P.S.	APW #4871100		X		CURRENTLY UNDER A FIELD VALIDATION PROGRAM	P-015
P-016	1	X	HOTWELL TABLE KFC M.A.P.S.	APW #4871200	X	X		CURRENTLY UNDER A FIELD VALIDATION PROGRAM	P-016
P-017	1	X	COLDWELL TABLE	APW #4871300	X	X		CURRENTLY UNDER A FIELD VALIDATION PROGRAM	P-017
P-018	1	X	TOASTER TABLE	APW #4873300		X		CURRENTLY UNDER A FIELD VALIDATION PROGRAM	P-018
P-019	1	X	OVERSHELF 26.125"D x 80"W x 19.31"H	APW #4871600				SPANS OVER HOT TABLE & COLD TABLE - CURRENTLY UNDER A FIELD VALIDATION PROGRAM	P-019
P-020	1	X	DUKE TABLE	APW #4871400				CURRENTLY UNDER A FIELD VALIDATION PROGRAM	P-020
P-021	1	X	MICROWAVE OVER SHELF	APW #4871800				CURRENTLY UNDER A FIELD VALIDATION PROGRAM	P-021
P 046	1	X	MONITOR RAIL	APW/WYOTT #4874600		X		CURRENTLY UNDER A FIELD VALIDATION PROGRAM	P-046
P-117	1	X	PACKAGING BIN	APW #4872400					P-117
P-360	1	X	MIXER TIMER	FASTRON #KFCMT200		X		FOR MIXER	P-360
P-370	1	X	8 CHANNEL TIMER	FAST KTRACKER8		X		FOR HOT DOG GRILL	P-370
P-451	2	X	HOT WATER DISPENSER (5 GAL.)	BUNN #E0210008	X	X		(2) WALL MOUNT BRACKETS # 13125.0001, SIDE BY SIDE	P-451
P-500	1	X	MIXER	HOBART #A200		X			P-500
P-532	1	X	SHORTENING SHUTTLE	WORCESTER SS-709					P-532
P-575	1	X	CAN OPENER	EDLUND G-2					P-575
P-601	2	X	BREADER (SINGLE) 48"L x 30"W x 36"H	AYRKING #BBS-EC1-4830BP		X			P 601
P-650	1	X	CONVECTION OVEN TABLE 32"W x 31"D	APW/AMERICAN WYOTT #4857700					P-650
P 822	2	X	WARMING DRAWER	TOAST MASTER #3A20A		X			P-822
P-842	2	X	MOBILE WARMER HEATED DRAWER - SINGLE	TOAST MASTER #3A81D		X			P-842
P-843	1 SET	X	BOTTLE HOLDER	APW #4871605 (L/H) - APW #4871615 (R/H)				CURRENTLY UNDER A FIELD VALIDATION PROGRAM	P-843
			R REFRIGERATION						
R-010	0	X	CHEST FREEZER W/ SLIDING TOP	SILVER KING SKMF-34, 3.7 CU FT.		X			R-010
R-030	1	X	1/2 HT. FREEZER (RH) STD. CASTERS	DELFIELD 407CA, RH		X			R-030
R-031	1	X	1/2 HT. FREEZER (LH) STD. CASTERS	DELFIELD 407CA, LH		X			R-031
R-033	1	X	1/2 HT. FREEZER (LH)	DELFIELD 407CA, LH		X		1" CASTERS	R-033
R-050	2	X	HALF-HEIGHT REFRIGERATOR (LH)	DELFIELD #406CASPL, 1" CASTERS		X			R-050
R-051	1	X	HALF-HEIGHT REFRIGERATOR (RH)	DELFIELD #406CASPL, 1" CASTERS		X			R-051
R-100	1	X	MUG FROSTER W/ CASTERS (3'0")	PERLICK #FR36SS2		X		W/ 1 SHELF (FOR SINGLE SIZE MUG)	R-100
R-120	1	X	ICE CREAM FREEZER - 2 DOOR	DELFIELD #225, 27.87"W X 16.56"D X 26.81"H		X			R-120
			S SERVING/DRIVE-THRU						
S-002	2	X	HEATED CABINET -FULL SIZE R/H HINGE	HENNY PENNY #HHC-900 (R/H)		X		W/ GLASS DOORS ON FRONT AND BACK	S-002
S-048	1	X	27" PASS-THRU WARMER	HATCO #CRSDHI-27		X		LOCATED ON OVERSHELF	S-048
S-060	1	X	COUNTERTOP 4/3 WARMER	APW/AMERICAN WYOTT #CW3A		X		USED FOR SAUCING WINGS	S-060
S-080	1	X	DUKE CABINET - DUAL SIDED	DUKE FWM 3.51.120		X		MUST ORDER PAN KIT CONSISTING OF 15 PANS	S-080
S-200	1		DRIVE-THRU TIMER	ERC #D11-KFCNT		X			S-200
S-220	1	X	HEADSET HOOKS	HME #C10544					S-220
S-230	1	X	BATTERY CHARGERS	HME #C11124		X			S-230
S-250	1		DUAL OUTPUT VEHICLE DETECTOR	ERC #9172		X			S-250
S-251	1		DRIVE-THRU TIMER DISPLAY UNIT	ERC TM-05		X			S-251
S-260	1	X	DRIVE THRU CONDIMENT TOWER	ISS #CONDTOW24LA					S-260
S-283	1	X	DRIVE THRU DRINK STAGER	ISS #WST788F					S-283
S-344	1	X	PICK-UP DRIVE-THRU COUNTER (30" x 54")	ISS #PUDT6540FYA					S-344
S-366	1	X	BEVERAGE COUNTER - DRIVE THRU	DELFIELD AW00A220				STAINLESS STEEL	S-366
S-400	1	X	DIPPERWELL - FAUCET & WASTE CHUTE	CECILWARE #W510	X				S-400
S-411	2	X	DRAFT ARM WITH HANDLE	PERLICK #4010AWA					S-411
S 414	1	X	DRAFT ARM WITH HANDLE ADA	PERLICK #4010AWA				W/ HANDLE TAP KNOB BULLS EYE LOGO #300006B	S-414
S-440	2	X	FLUSH MOUNTED LID DISPENSER	TRAEX #I-ML-3V					S-440
S-441	1	X	FLUSH MOUNTED WRAPPED STRAW DISPENSER	TRAEX #MRBM-2					S-441
S-450	2	X	T-SHIRT BAG HOLDER	MOBILE #M683				ATTACH TO KFC POSTPACK	S-450
S-470	4	X	DISPENSER -STAIN LINER	FOOD SERVICE SUPPLIES #78123					S-470
S-482	1	X	CUP DISPENSER 30-1/8" X 15 1/16" X 23 3/4" D	A.J. ANTUNES #DACS60				BOX WITH 8 BOX SLIDE-VFS	S-482
S 512	2	X	ICE CUBER	MANITOWOC #SY0614C	X	X			S-512
S-532	2		BEVERAGE DISPENSER (SELF SERVE / DRIVE THRU)	CORNELIUS #ED 250	X	X			S-532
S-550	1		BAG-N-BOX SYRUP RACK	CORNELIUS/REMCOR BNB12B8P	X			FLO 3REG 2CRB	S-550
S 554	1	X	CONDUIT, REFRIGERATION	MANITOWOC - 100'	X	X			S-554
S-555	2	X	MULTIPLEX BAG-N-BOX RACK	ISS #BB318Y					S-555
S-556	1	X	BEVERAGE COMPONENT PANEL	WUNDERBAR #WBAI-1HOORBS	X	X			S-556
S-560	1	X	MULTIPLEX UNIT W/ LINE KIT	MANITOWOC #38M04B	X	X			S 560
S-570	2		CARBONATOR	CORN/REM	X	X		LOCATED ON SHELF BENEATH DRINK TABLE	S-570
S-580	1		CO2 (BULK) TANK	MVE #11805373				WITHOUT IMPURITY RING	S-580
S-585	2	X	DIET DISPENSER	CORNELIUS #6310000146203	X	X			S-585
S-590	1	X	WATER FILTER SYSTEM	SELECTO #MFS/620-5	X				S-590
S-600	2	X	BUNDLED SYRUP LINES	CORNELIUS/REMCOR TUBE BUNDLE					S-600
S-650	1	X	FLOATS COUNTER	DELFIELD #AW00A211					S-650
S-710	4	X	CUP DISPENSER	A.J. ANTUNES #DAC-05					S-710
S 711	2	X	CUP DISPENSER	A.J. ANTUNES #DAC-10					S-711
			U SECURITY/COMM./FIRE PROT./POS						
U-001	1	X	BASE STATION - D/T COMM SYSTEM	HME SYSTEM #C111192 400 +7'-0" A.F.F.		X		6 COMMUNICATORS	U-001
U-045	1	X	SECURITY SYSTEM	ADT #KFADV40		X		W/ WALL MOUNT BRACKETS	U-045
U-061	2		CREDIT CARD READER (VSAT)			X			U-061
U-070	3		RECEIPT PRINTER	POS PROVIDED		X		2 FOR F/C AND 1 D/T	U-070
U-100	4		POS/ORDER ENTRY TERMINAL	POS PROVIDED		X			U-100
U-121	2		CASH DRAWER HOLDER	POS PROVIDED				SEE SCOPE OF WORK	U-121
U-152	3		CASH DRAWER	POS PROVIDED				SEE SCOPE OF WORK	U-152
U-201	6		KITCHEN MONITOR	POS PROVIDED		X			U-201
U-241	4	X	MONITOR HANGING BRACKET	BR MFTAL TECHNOLOGY #7190WB					U-241
U-245	2	X	MONITOR WALL BRACKET	POS PROVIDED					U-245
U-250	6		BUMP BAR	POS PROVIDED					U-250
			W WALK-IN COOLERS/FREEZERS						
W-060	1	X	WALK IN COOLER/FREEZER 22'-2" x 8'-0" x 8'-6 1/4"	ICS	X	X		2 COOLERS AND 1 FREEZER	W-060

NOTE: ITEMS NOTED AS "CURRENTLY UNDER A FIELD VALIDATION PROGRAM" ARE PART OF A LARGE SCALE EVALUATION AND MAY NOT BE APPROVED FOR CONTINUING USE FOLLOWING COMPLETION OF THE EVALUATION. PLEASE CONTACT YOUR DISTRIBUTOR IF YOU HAVE ANY QUESTIONS.

B D/T CLEARANCE BAR, SECURITY DOOR, WATER HEATER, D/T WINDOW, RESTROOM ACCESSORIES, AIR DOOR/CURTAIN, MOP SINK, HAND SINK ACC., CORNER GUARDS, MATS
C FRYERS, OVENS, GRILLS, RETHERMALIZERS, TOASTERS, MICROWAVES
E KITCHEN EXHAUST HOODS, FIRE SUPPRESSION EQUIPMENT
F SAFE, OFFICE EQUIPMENT, EMPLOYEE STORAGE/BREAK
K SHELVING, WORKSTATIONS, CARTS, RACKS, DOLLIES
L SITE LIGHTING, SIGNAGE, MENUBOARDS
N POWERSOAK, KITCHEN HAND SINKS, PREP. SINKS, DISHWASHERS
P M.A.P.S. LINES, I-LINES, PACK LINES, BREADERS, MARINATORS, HOT WATER, WORK TABLES, CHEESE MELTERS
R REFRIGERATORS AND FREEZERS (NOT WALK-IN)
S DRINK SYSTEMS & EQUIP., HEAT CABINETS, STAGERS, WARMERS, SERVING EQUIP., D/T EQUIP.
U SECURITY SYSTEM, LOCKS, CCTV, D/T COMMUNICATIONS/POS SYSTEM, POS EQUIP.
W WALK-IN COOLERS/FREEZERS

CITY OF SAN JOSE
BUILDING DIVISION
B.P. #
DATE

Vincent+Murphy
Incorporated

637 Fifth Avenue
San Rafael, Ca. 94901
(415) 451-2500
FAX 451-2595

LICENSED ARCHITECT
MICHAEL EDWARD MURPHY
No. C17926
REN. 10/31/07
STATE OF CALIFORNIA

JOB NUMBER
E-10610

SUBMITTALS

03/24/06	BLDG PC#1 SUBMITTAL

REVISIONS

CONTRACT DATE:
BUILDING TYPE: KA60-Y04
PLAN VERSION: JAN 05 D
SITE NUMBER:
STORE NUMBER:

KFC / A&W

3144 S. BASCOM AVENUE
SAN JOSE, CA 95124-2022

KA60-Y04

EQUIPMENT SCHEDULE

A2.1

W:\Data\harmon\2005\H0510_san jose_bascom\03_cd_current\030_KA_Y04-42_1.dwg modified by Dhamingan at Jun 26, 2006 - 4:18pm

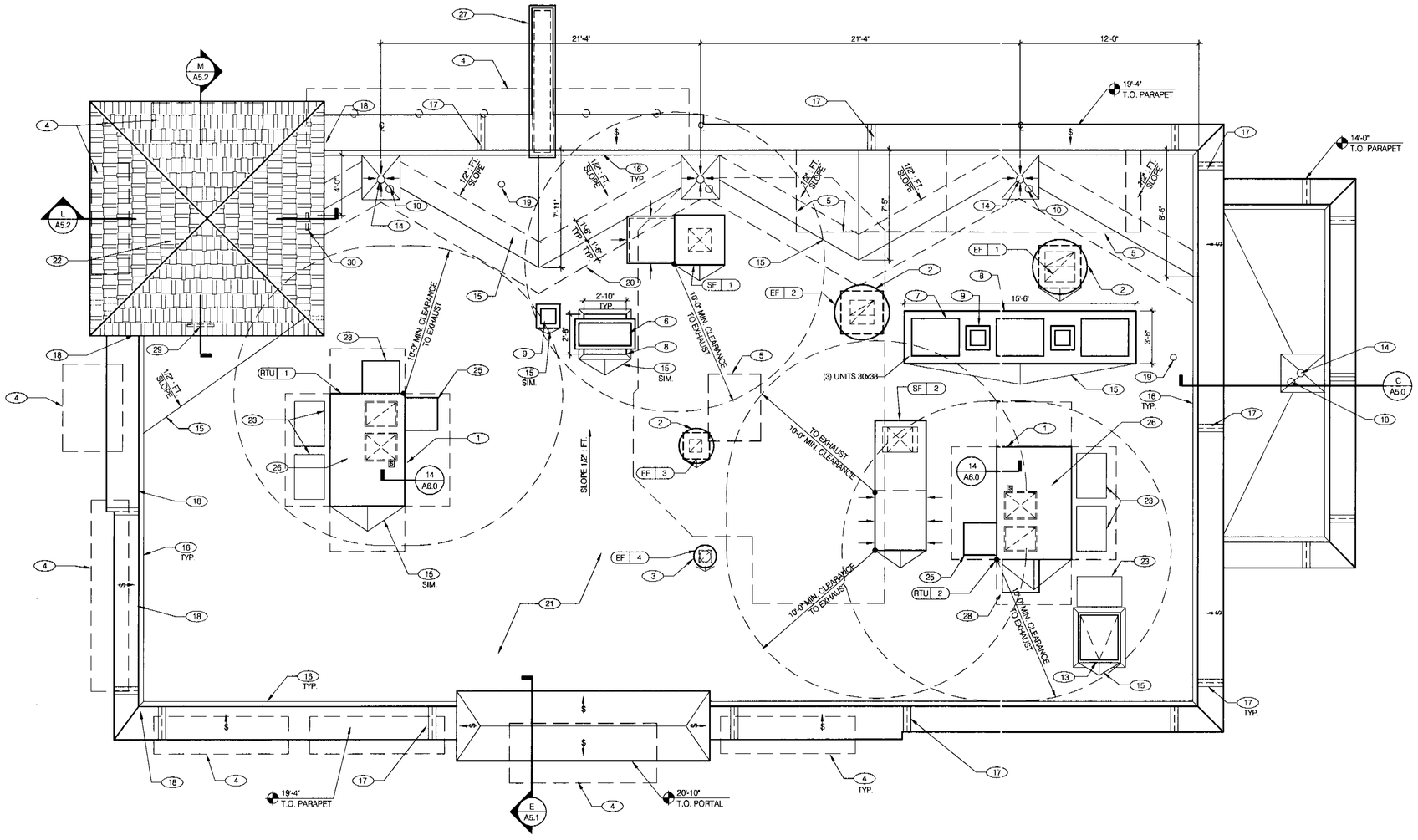

ROOF PLAN 1/4"=1'-0" **A**

NOT USED **F**

WATERPROOFING:
A. PAINT UNDERSIDE OF PARAPET CAP FLASHING WITH FACTORY BONDED PAINT GRIP OR PRIMER.
B. TOP NAILING AT PARAPET CAP FLASHING WILL NOT BE ACCEPTED.
C. PENETRATIONS IN ROOFING MEMBRANE AND FLASHING SHALL ONLY BE MADE AS INDICATED ON THE DRAWINGS OR SPECS.
D. SEE SPECIFICATIONS FOR SEALANT SPECS.
E. ALL SHEET MTL. FLASHING SHALL BE 22 GA MIN.

MISCELLANEOUS:
A. ROOF PENETRATIONS CLOSER THAN 12" FROM ANOTHER WILL NOT BE ALLOWED.
B. EXHAUST FANS MIN. 10'-0" AWAY FROM ALL AIR INTAKE / SUPPLY.
C. LOCATE WALK-IN CONDENSERS ON ROOF ONLY IF REQUIRED BY CODE.

ROOF PLAN NOTES **E**

1. ROOFTOP UNIT. INSTALL PLUMB AND LEVEL.
2. KITCHEN HOOD EXHAUST FAN. SEE SHEETS M3.0, M3.1, & DETAILS 16/A6.0 & 19/A6.0.
3. TOILET ROOM EXHAUST FAN. SEE 18/A6.0.
4. AWNINGS & CANOPIES. SEE SCOPE OF WORK.
5. LINE OF EXHAUST HOOD (BELOW).
6. ICE MACHINE CONDENSERS.
7. WALK-IN COOLER / FREEZER CONDENSERS. SEE SCOPE OF WORK SHEET.
8. EQUIPMENT PLATFORM. SEE DETAIL 15/A6.0.
9. PIPE HOOD FOR UTILITIES. SEE DETAIL 9/A6.0.
10. EMERGENCY OVERFLOW DRAIN. SEE 13/A6.0.
11. ROOFING PROTECTION LAYER. SEE 16/A6.0.
12. LINE OF K.F.C. TOWER CAP. SEE L & M/A5.2 AND SCOPE OF WORK.
13. ROOF ACCESS HATCH. SEE DETAILS 8/A6.0 & 20/A6.0.
14. ROOF DRAIN. SEE 13/A6.0.
15. ROOF CRICKET. SEE DETAIL 7/A6.0.
16. CANT STRIP. SEE DETAIL 4/A6.0 FOR TYP. WALL BASE FLASHING.
17. COPING JOINT W/ CAP FLASHING SEAM, TYP. REFER TO DETAIL 11/A6.0. EVERY 20'-0" RUN MAX. AND 24" MAX. FROM EACH CORNER.
18. TRANSITION COPING TYPICAL. SEE DETAIL 10/A6.0.
19. WASTE VENT THROUGH ROOF. SEE 12/A6.0 FOR FLASHING ASSEMBLY.
20. WATER PLY BELOW BASE PLY. NO PENETRATIONS BETWEEN DASHED LINES.
21. BUILT-UP ROOFING (PER SPECS.), OVER RIGID INSUL, OVER PLYWD., OVER TRUSSES.
22. CONCRETE ROOF TILES.
23. 24x36 WALK MATS. SEE ROOF SPECS.
24. MAINTAIN MFR'S ROOFTOP UNIT MAINT CLEARANCE.
25. OUTSIDE AIR INTAKE FOR ROOFTOP UNIT. MAINTAIN MIN. 10'-0" SEPARATION FROM PLUMBING VENTS, FLUES AND BUILDING EXHAUST.
26. POWER / GAS / CONDENSATE ENTRY UNDER H.V.A.C. UNIT (PER H.V.A.C. MFR. SPECS.) REFER TO MECH. AND PLUMB DWGS. UTILITY ACCESS FROM WITHIN CURB - NO ROOF PENETRATIONS. DO NOT RUN ON ROOF SURFACE. SEE 13/P6.0.
27. LINE OF A&W TOWER CAP. SEE AND SCOPE OF WORK. (N.I.C.) BY SIGN CO.
28. RELIEF HOOD.
29. 22"X30" (NET OPG.) GSM SOLID ACCESS PANEL. SEE SHEET A5.2.
30. 14"X12" TOWER VENT. SEE SHEET A5.2.

KEY NOTES **B**

CITY OF SAN JOSE
BUILDING DIVISION
B.P. #_____
DATE_____

Vincent+Murphy
Incorporated

637 Fifth Avenue
San Rafael, Ca. 94901
(415) 451-2500
FAX 451-2595

LICENSED ARCHITECT
HUGH SEWARD MURPHY
REG. C17926
10/31/07
STATE OF CALIFORNIA

JOB NUMBER
H0510

SUBMITTALS

03/24/06	BLD'G PC#1 SUBMITTAL

REVISIONS

CONTRACT DATE:
BUILDING TYPE: KA60-Y04
PLAN VERSION: JAN 05 D
SITE NUMBER:
STORE NUMBER:

KFC / A&W

3144 S. BASCOM AVENUE
SAN JOSE, CA. 95124-2022

KA60-Y04

ROOF PLAN

A3.0

W:\Data\karman\2005\H0510_san jose_bascom\03_cd_current\032_KA_Y04-A3_0.dwg modified by Dhanrajan at Jan 26, 2006 - 4:19pm

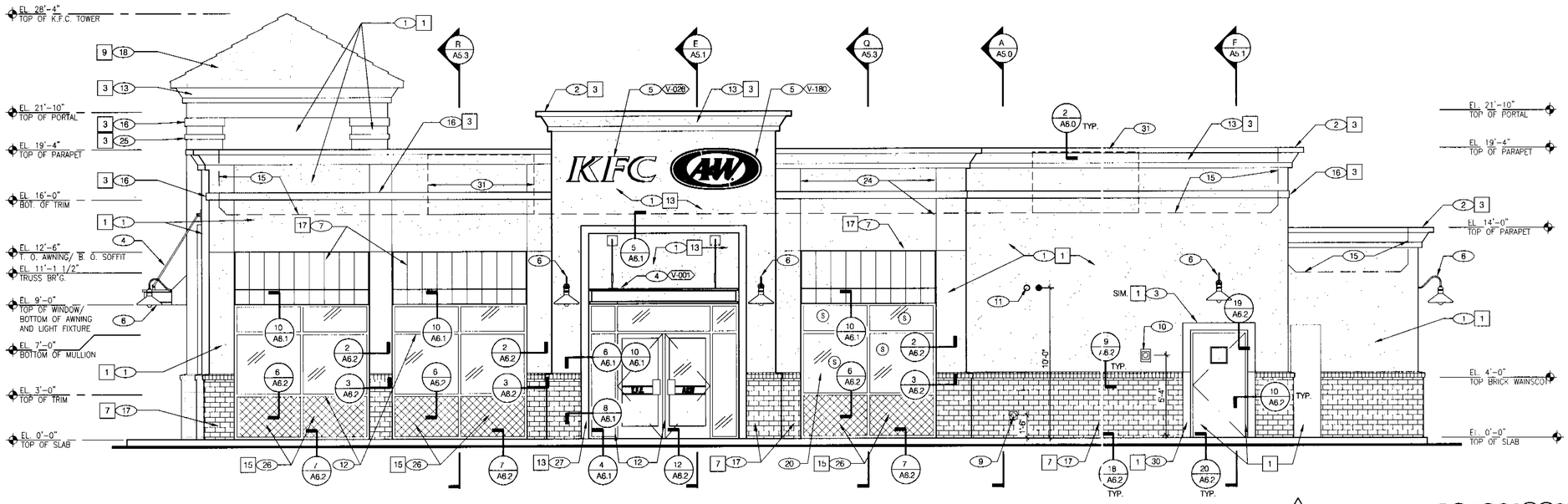

AWNINGS, CANOPIES & SIGNS SHALL BE ISSUED UNDER SEPERATE PERMIT

EAST (REAR) ELEVATION 1/4"=1'-0" A

1. STEEL U-CHANNEL @ SERVICE DOOR: FASTEN TO TRIM W/ CONTINUOUS CONSTRUCTION ADHESIVE.

MISCELLANEOUS

1. ◯ ◯ REF. SHT. A1.1, DOOR AND WINDOW SCHEDULE, FOR TYPES, DIMENSION AND ELEVATIONS.
2. AWNINGS, CANOPIES AND CUPOLA SUPPLIED AND INSTALLED BY OWNER'S VENDOR UNDER SEPARATE PERMIT. GENERAL CONTRACTOR TO PROVIDE BLOCKING, ROUGH ELECTRICAL AND MAKE FINAL CONNECTIONS.
3. ALL EXTERIOR PAINT TO BE SEMI-GLOSS.
4. PROVIDE ANTI-GRAFFITI COATING (PER SPEC'S SECTION 09964) AROUND ENTIRE BUILDING AND TRASH ENCLOSURE. COATING TO EXTEND FULL HEIGHT.

EXTERIOR PLASTER (REFER TO SPEC'S SECTION 09220)

1. 7/8" PLASTER OVER 3.4 LB./SQ. YD. SELF-FURRING GALVANIZED METAL LATH OVER 2-LAYERS, FACTORY APPLIED GRADE "D", 60 MINUTE PAPER. FINISH COAT TO BE 100% ACRYLIC BASE TYPE USING MFR. APPROVED BASE PRIMER.
2. LATH, OTHER THAN AS SPECIFIED OR AGREED TO IN WRITING BY THE OWNER, WILL BE REJECTED. ALL FASTENERS SHALL BE GALVANIZED.
3. COLD JOINTS WILL NOT BE ACCEPTABLE UNDER ANY CIRCUMSTANCES.
4. **PLASTER FINISH SHALL BE "SMOOTH SAND" AS SPECIFIED BY THE STUCCO MANUFACTURERS ASSOCIATION, MACHINE APPLIED W/ KNOCK DOWN FINISH.**
5. MESH AS SPECIFIED SHALL NOT OVERLAP OR BE CONTINUOUS AT CONTROL JOINTS NOR COINCIDE WITH PLYWOOD JOINTS.
6. SCARIFICATION AS SPECIFIED SHALL ALWAYS BE IN THE HORIZONTAL DIRECTION.
7. INTERIOR DRYWALL SHALL ALWAYS BE INSTALLED AFTER BUILDING HAS BEEN "DRIED-IN," BUT PRIOR TO APPLICATION OF STUCCO - UNLESS DRYWALL IS SCREWED, NOT NAILED.
8. PROVIDE 100% ACRYLIC EXTERIOR PENETRATING SEALER OVER ALL HORIZONTAL PLASTER SURFACES.

SEALERS (REFER TO SPECIFICATIONS)

1. SEALANT AT ALL WALL AND ROOF PENETRATIONS.
2. SEALANT AT ALL WINDOWS AND DOOR FRAMES AT HEAD, SILL AND JAMB.

EXTERIOR PAINT NOTE

1. **SHERWIN WILLIAM'S EXTERIOR PAINT COLORS MIXES. IF THERE IS A PROBLEM OBTAINING SPECIFIED COLORS CONTACT JERRY GROENIN @ 415-987-1935.**

ELEVATION GENERAL NOTES N.T.S. J

MATERIALS ADHESION/FASTENING N.T.S. G

SYMBOL	AREA / ITEM	MANUF. COLOR NUMBER / NAME
1	K.F.C. MAIN WALL	SHERMAN WILLIAM'S - SW 2207 "COLONY BUFF"
2	K.F.C. ACCENT BAND	SHERMAN WILLIAM'S - SW2208 "MESA TAN"
3	K.F.C. ACCENT COLOR	SHERMAN WILLIAM'S - SW 2123 "K.F.C. WHITE" ALT. BENJAMIN MOORE - #873
4	A&W MAIN WALL	SHERMAN WILLIAM'S - 2197 "YELLOWSTONE"
5	A&W ACCENT BAND	SHERMAN WILLIAM'S - 1363 "CELLINI GOLD"
6	A&W ACCENT COLOR	SHERMAN WILLIAM'S - 1368 "CREME"
7	BUILDING BRICK	BOWERSTONE SHALE - 940
7	POLY BLEND MORTAR	COSMORTAR OCHRE (CALL FOR MIX RATIO) 1-800 626-6117 OR (502) 933-0122
8	~~K.F.C. COLUMN TILE~~	~~DAL TILE - C550 "CGYPTIAN BEIGE"~~
9	ROOF TILE	BOWERTON SHALE - #940
9 10	~~TILE GROUT~~	~~GENESE CERAMIC TILE - 700 "WHITE (G) 810. 459-1009~~
10	K.F.C. TOWER TILE	MONIERLIFETILE - #LCS3943 "SADDLE"
11	A&W CHECK PATTERN	SHERWIN WILLIAM'S - 2335 "GOLDEN NEEDLE"
12	A&W CHECK PATTERN	SHERWIN WILLIAM'S - 2719 "RUSTIC RED"
13	BETWEEN THE BRANDS	SHERWIN WILLIAM'S - 2829 CLASSIC WHITE
14	~~WALK IN COOLER~~	~~FACTORY FINISH SAND~~
15	A&W PANELS	4 1/2" x 4 1/2" QUILTED STAINLESS STEEL 20G. #8 MIRROR FINISH
16	~~PIPE BOLLARDS~~	~~DOT YELLOW~~
17	METAL AWNINGS	FACTORY? - TERRA COTTA

MATERIALS ADHESION/FASTENING N.T.S. H

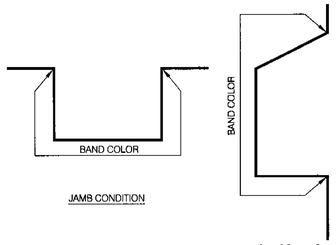

ACCENT BAND COLOR TRANSITION N.T.S. E

MISCELLANEOUS

A. REF. SHT A1.1 "WINDOW TYPES" FOR WINDOW ELEVATIONS.
B. REF. SCOPE OF WORK FOR RESPONSIBILITIES.
C. "HIGH IMPACT" MESH SHALL BE USED AT ALL RAISED TRIM BANDS @ ENTRIES, WINDOWS, EXPRESSION PANELS AND A & W HI ADH TO BOTTOM OF CANOPY ONLY. REF. DETAIL 2/A6.3

SEALERS (REFER TO SPECS):

A. SEALANT AT ALL WALL AND ROOF PENETRATIONS.
B. SEALANT AT ALL WINDOW AND DOOR FRAMES AT HEAD AND JAMB. DO NOT SEAL SILL @ WINDOWS.

LEGEND:

A. VENDOR SCOPE INCLUDES SUPPLY AND INSTALLATION OF AWNINGS, CANOPIES, AND SIGNAGE.

(S) B. SPANDREL LOCATIONS.

GENERAL NOTES F

V-XXX	QTY	ITEM DESCRIPTION	ELEC.
V-001	1	CANOPY 9'-10"W x 12"H x 4'-0"D	X
V-003	1	CANOPY 6'-6"W x 12"H x 4'-0"D	X
V-025	1	K.F.C. SIGN 5'-5" x 7'-0"	X
V-026	2	K.F.C. LETTERS SIGN	X
V-030	2	K.F.C. TOWER AWNING 8'-5"W x 4'-0"H x 1'-7"D	*
V-150	1	A&W TOWER CAP	
V-156	1	A&W TOWER CANOPY	X
V-160	2	A&W LOGO SIGN 6'-0 3/4"W x 3'-7 1/2"H x 10"D	X
V-165	2	A&W "ALL AMERICAN FOOD" SIGN 8'-0 3/4"W x 1'-6"H x 10"D	X
V-157	1	A&W CANOPY	X
V-160	1	A&W LOGO SIGN 6'-0" X 2'-10" ?	X
		* REQUIRES LIGHT FIXTURE(S). REF. ELECTRICAL	

SIGN/AWNING/CANOPY SCHEDULE N.T.S. D

CITY OF SAN JOSE
BUILDING DIVISION
"B.P." #_____
ISSUE: _____

NOT USED N.T.S. B

1. MAIN PLASTER WALL. REF. DETAILS 2, 4, & 8/A6.3.
2. GALV. METAL COPING. PRIME AND PAINT IN FIELD.
3. ACCENT BAND. REF. DETAILS 15, 16, 19/A6.2.
4. ALUMINUM CANOPY, DARK BRONZE FINISH. REF. SCOPE OF WORK.
5. BUILDING SIGN. REF. SCOPE OF WORK.
6. GOOSENECK LIGHT FIXTURE. FACTORY BLACK FINISH. REF. SHEET E4.0
7. METAL AWNINGS W/ STANDING SEAMS. REF. SCOPE OF WORK. SUPPLIED & INSTALLED BY SIGN CONTRACTOR UNDER SEPERATE PERMIT.
8. TERMINATE BRICK 1" FROM ELECTRICAL MAIN.
9. HOSE BIB - REFER TO DETAIL 19/A6.3. ALIGN W/ ADJACENT PERPENDICULAR INTERIOR WALL.
10. CO2 FILLER VALVE & COVER.
11. WATER HEATER VENT. REF. DETAIL 2/P6.0.
12. ALUMINUM STOREFRONT WITH DARK BRONZE FINISH. GLASS: CLEAR WITH PPG SOLARBAN 60.
13. CORNICE REF. DETAIL 2/ A6.3.
14. WALL SHALL BE FINISHED PRIOR TO INSTALLATION OF SWITCHGEAR.
15. INDICATES ROOF BEYOND.
16. PILASTER ACCENT BAND. REF. DETAILS 11/A6.3 & L/A4.0. BAND PAINT COLOR SHALL BE APPLIED TO TOP, BOTTOM & FACE OF BAND.
17. BRICK WAINSCOT W/ HOWLOCK SILL. REF. DETAIL 17 &18/A6.2
18. CONCRETE ROOF TILE
19. GAS METER. DO NOT PAINT METER.
20. ALUMINUM STOREFRONT WITH DARK BRONZE FINISH. GLASS: SPANDREL
21. A&W SIGN WITH PLASTER TEXTURE BY SIGN COMPANY.
22. ROOF DRAINS AND OVERFLOW PIPES SHALL EXTEND 2" BEYOND FINISHED SURFACE THRU HOLE 1" LARGER THAN THE PIPE. SEALED WITH BACKER ROD AND SEALANT.
23. 6" HIGH BLACK PHENOLIC STREET ADDRESS NUMBER SUPPLIED & INSTALLED BY GC.
24. EXPANSION JOINT. REF. DETAIL 9/A6.3.
25. TRIM BAND REF. DETAIL 10/A6.3
26. QUILTED S.S. PANELS SET IN STORE FRONT FRAME. REF. SHEET A1.1 & 6/A6.2
27. TRIM AT ENTRY, REF. 9, 11, 12 / A6.1
28. PREFAB A&W TOWER CAP.
29. PLASTER TRIM AT FRONT ENTRY. REF. 5, 7 & 8/A6.1.
30. 18 GA. PAINTED STEEL U-CHANNEL TO EXTEND TO TOP OF WAINSCOT. PAINT TO MATCH ACCENT BAND AROUND DOOR.
31. R.T.U. LOCATION

KEY NOTES C

Vincent+Murphy Incorporated
637 Fifth Avenue
San Rafael, Ca. 94901
(415) 451-2500
FAX 451-2595

LICENSED ARCHITECT HUGH EDWARD MURPHY No. C17988 EXP. 10/31/07 STATE OF CALIFORNIA

JOB NUMBER H0510

SUBMITTALS

03/24/06	BLDG PC#1 SUBMITTAL

REVISIONS

1	04/28/06	P.C. RESPONSE #1
2	06/23/06	P.C. RESPONSE #2

CONTRACT DATE:
BUILDING TYPE: KA60-Y04
PLAN VERSION: JAN 06 D
SITE NUMBER:
STORE NUMBER:

KFC / A&W

3144 S. BASCOM AVENUE
SAN JOSE, CA. 95124-2022

All American Food

KA60-Y04

EXTERIOR ELEVATIONS

A4.0

w:\data\harman\2005\H0510_san jose_bascom\03_cd_current\034_KA_Y04-A4_0.dwg modified by Dharnigan at Jun 26, 2006 - 3:42pm

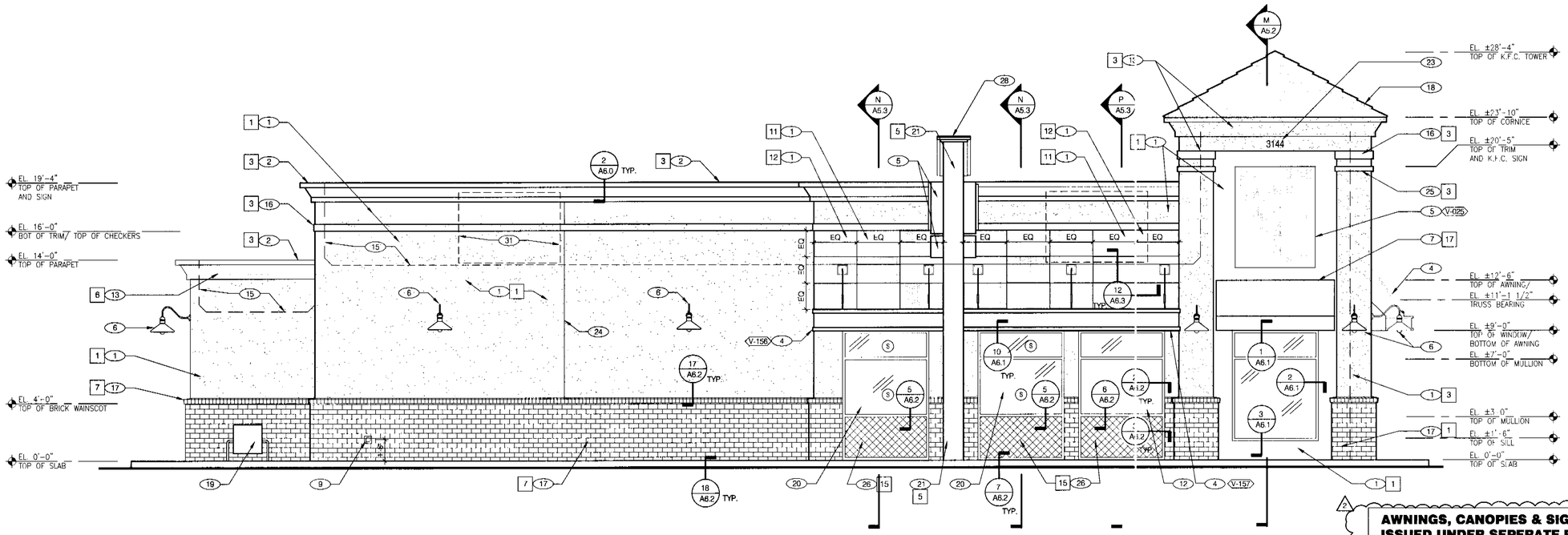

AWNINGS, CANOPIES & SIGNS SHALL BE ISSUED UNDER SEPERATE PERMIT

WEST (FRONT) ELEVATION 1/4" = 1'-0" | **A**

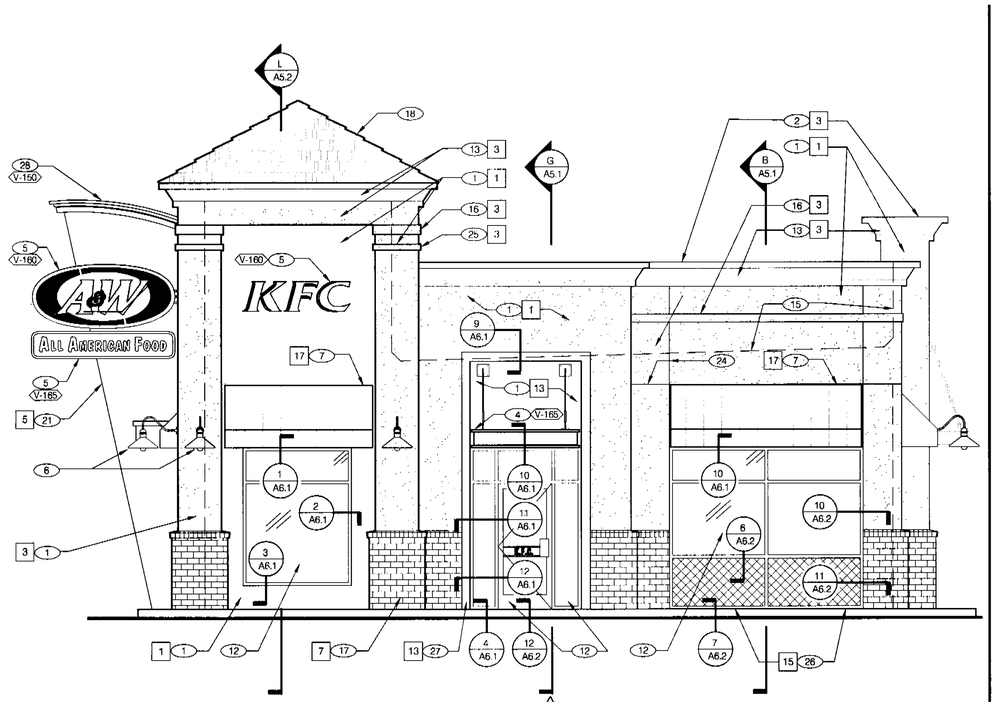

SOUTH (SIDE ENTRANCE) ELEVATION 1/4" = 1'-0" | **C**

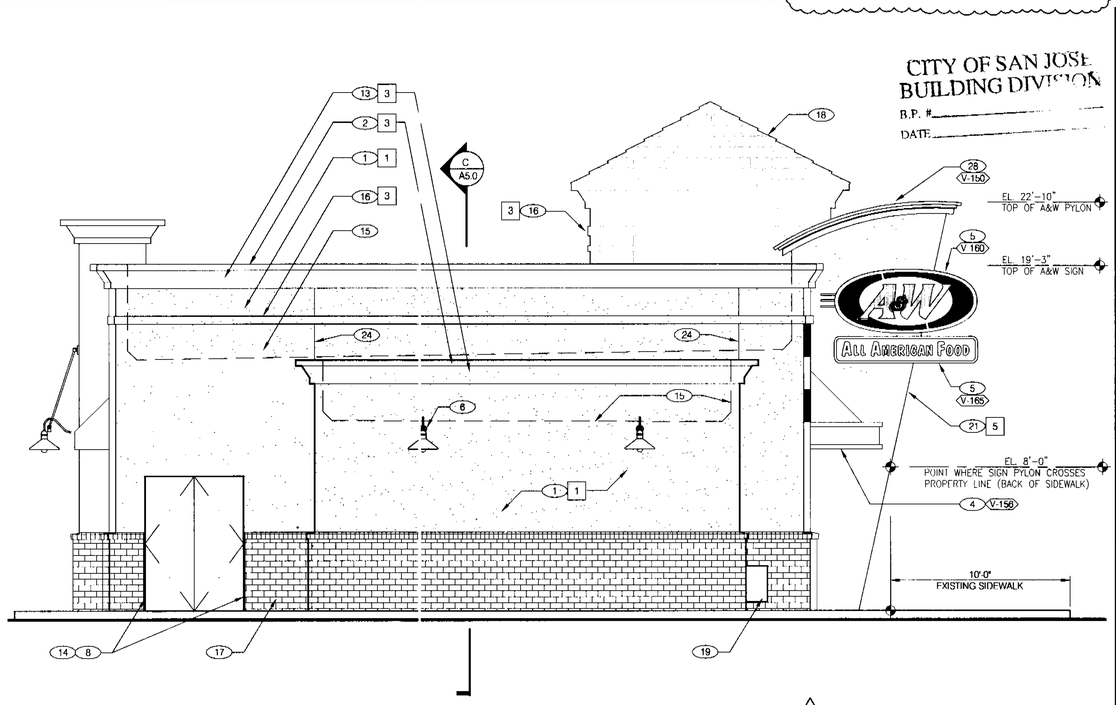

CITY OF SAN JOSE BUILDING DIVISION
B.P. #
DATE

NORTH ELEVATION 1/4" = 1'-0" | **B**

Vincent+Murphy Incorporated

637 Fifth Avenue
San Rafael, Ca. 94901
(415) 451-2500
FAX 451-2595

LICENSED ARCHITECT — WILLIAM EDWARD MURPHY — No. C17928 — EXP. 10/31/07 — STATE OF CALIFORNIA

JOB NUMBER
H0510

SUBMITTALS

03/24/06	BLDG PC#1 SUBMITTAL

REVISIONS

1	04/28/06	P.C. RESPONSE #1
2	06/23/06	P.C. RESPONSE #2

CONTRACT DATE:
BUILDING TYPE: KA60 Y04
PLAN VERSION: JAN 05 D
SITE NUMBER:
STORE NUMBER:

KFC / A&W

3144 S. BASCOM AVENUE
SAN JOSE, CA 95124-2022

KA60-Y04

EXTERIOR ELEVATIONS

A4.1

W:\Data\harmon\2005\H0510_san jose_bascom\03_cd_current\U35_KA_Y04-A4_1.dwg modified by Dhanington at Jun 26, 2006 - 3:43pm

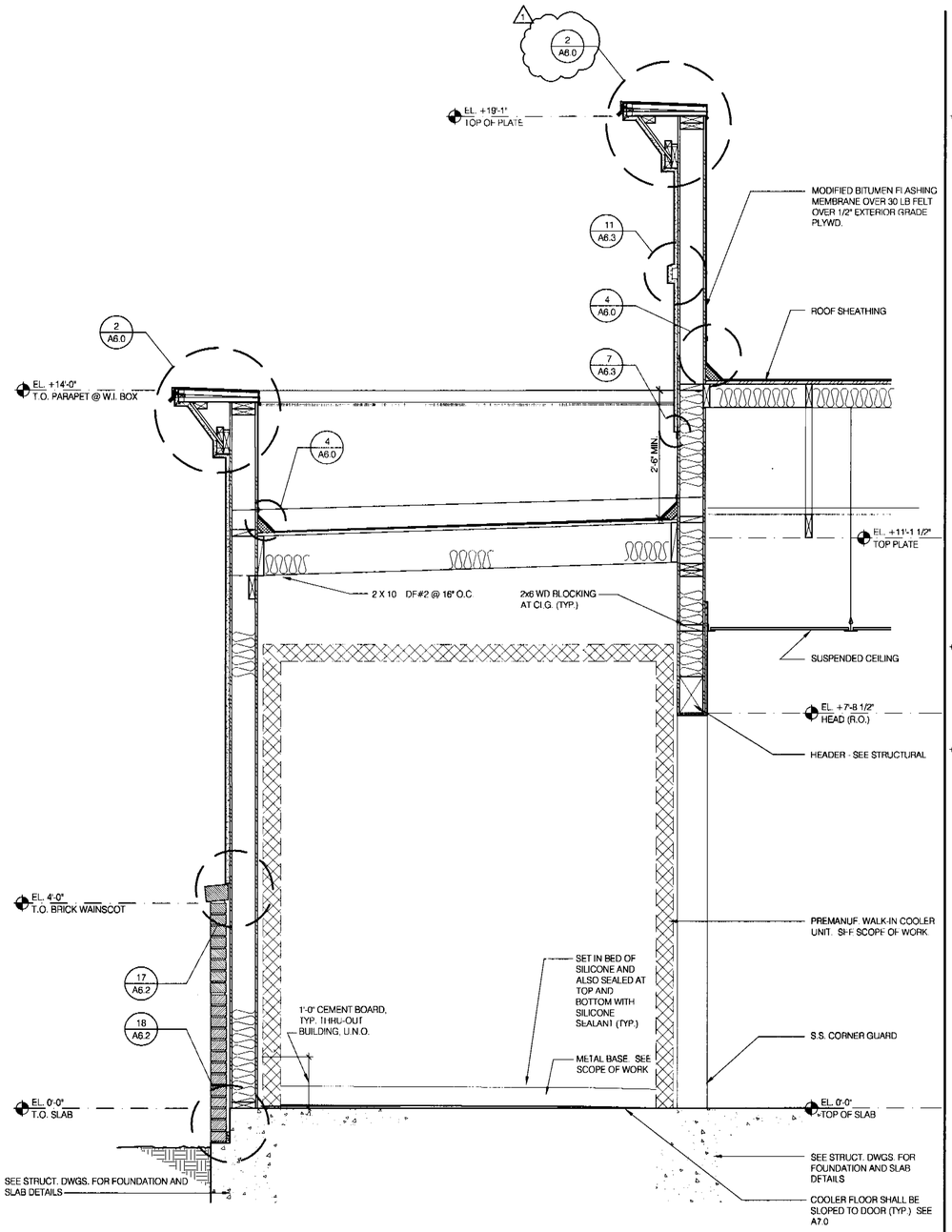

WALL SECTION / WALK-IN COOLER 3/4" = 1'-0" | C

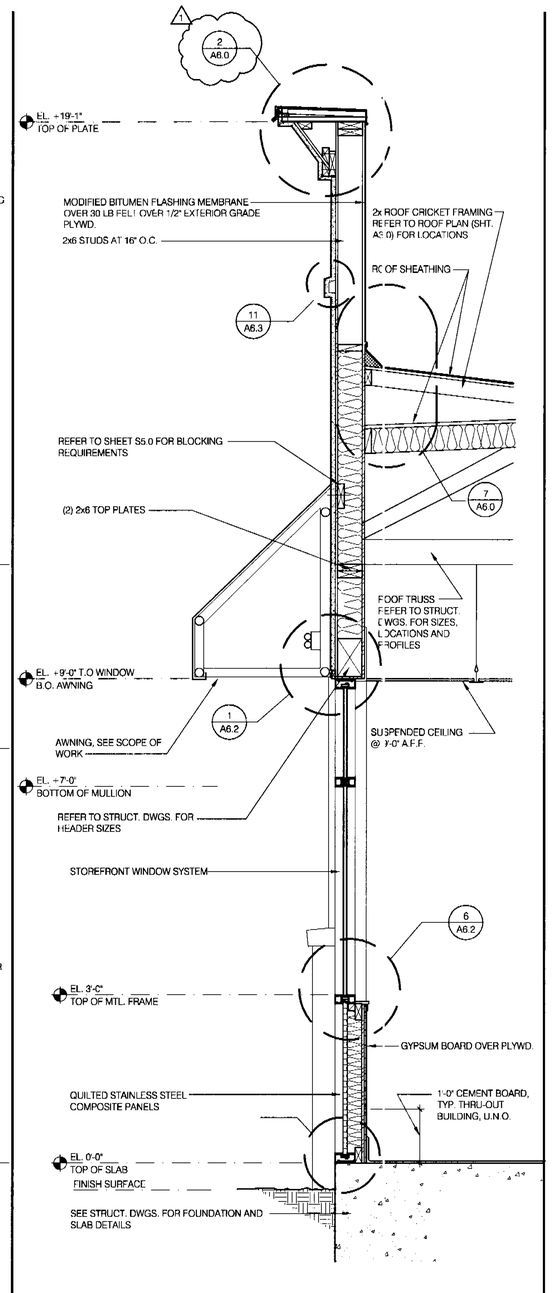

WALL SECTION / DINING 3/4" = 1'-0" | B

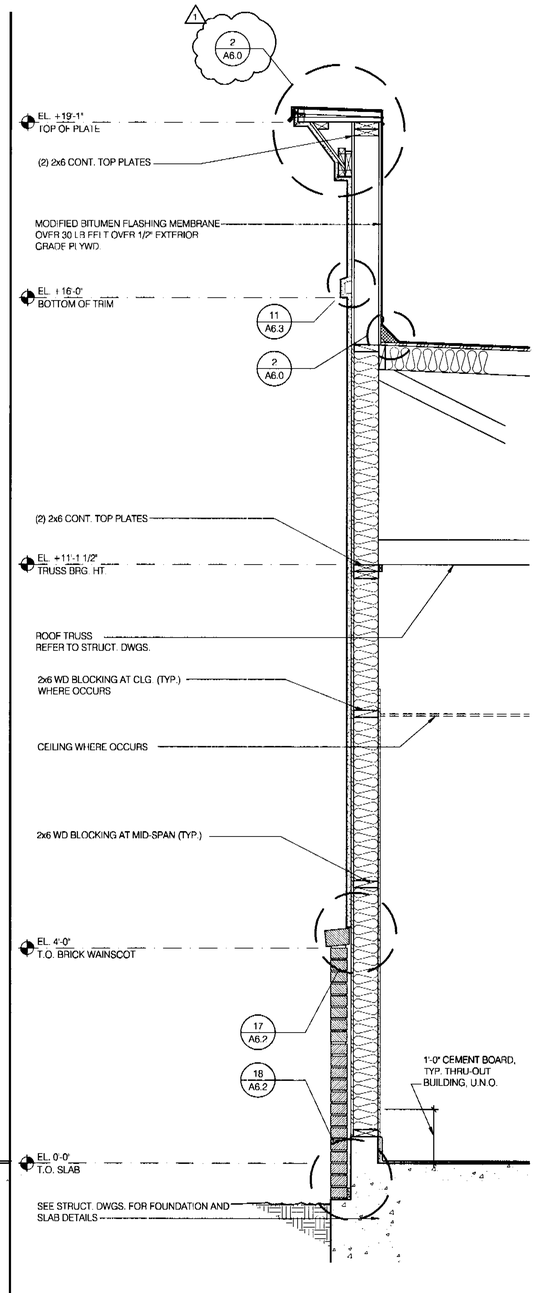

TYPICAL WALL SECTION 3/4" = 1'-0" | A

CITY OF SAN JOSE
BUILDING DIVISION

Vincent+Murphy
Incorporated

637 Fifth Avenue
San Rafael, Ca. 94901
(415) 451-2500
FAX 451-2595

LICENSED ARCHITECT
EDWARD MURPHY
No. C17928
EXP. 10/31/07
STATE OF CALIFORNIA

JOB NUMBER
H0510

SUBMITTALS

03/24/06	BLD'G PC#1 SUBMITTAL

REVISIONS

1 04/28/06	P.C. RESPONSE #1

CONTRACT DATE:
BUILDING TYPE: KA60-Y04
PLAN VERSION: JAN 05 D
SITE NUMBER
STORE NUMBER:

KFC / A&W

3144 S. BASCOM AVENUE
SAN JOSE, CA. 95124-2022

KA60-Y04

WALL SECTIONS

A5.0

w:\Data\herman\2005\H0510_san jose_bascom\03_cd_current\037_KA_Y04-A5_0.dwg modified by Dhernagen at Jun 26, 2006 - 3:43pm

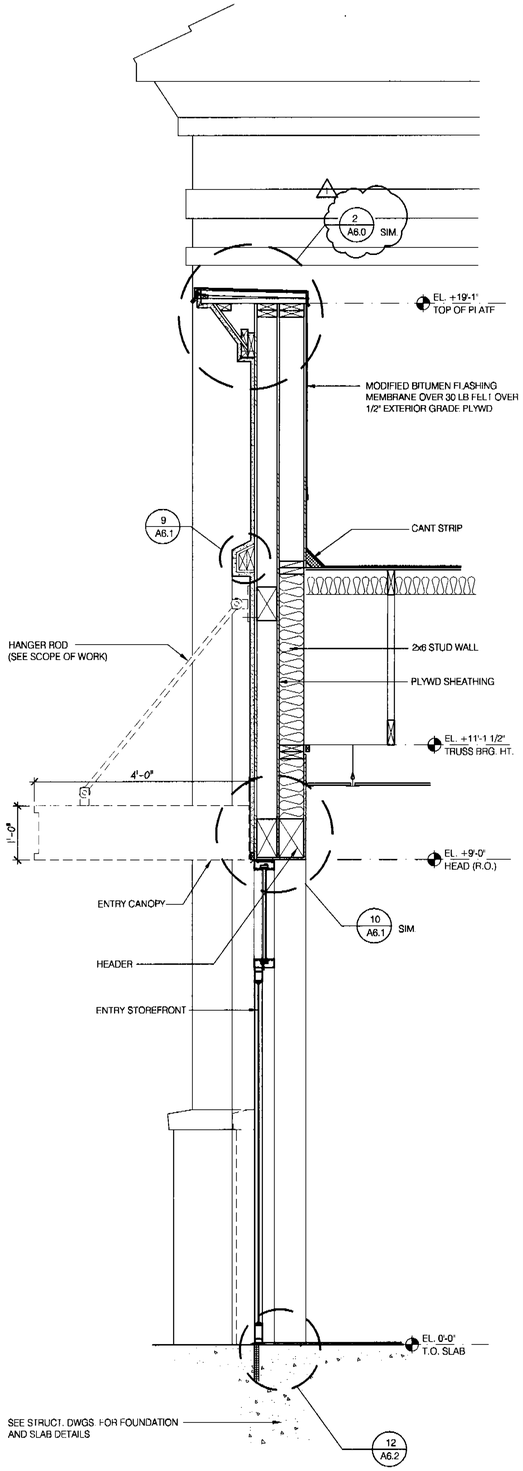

WALL SECTION AT SIDE ENTRY 3/4" = 1'-0" | G

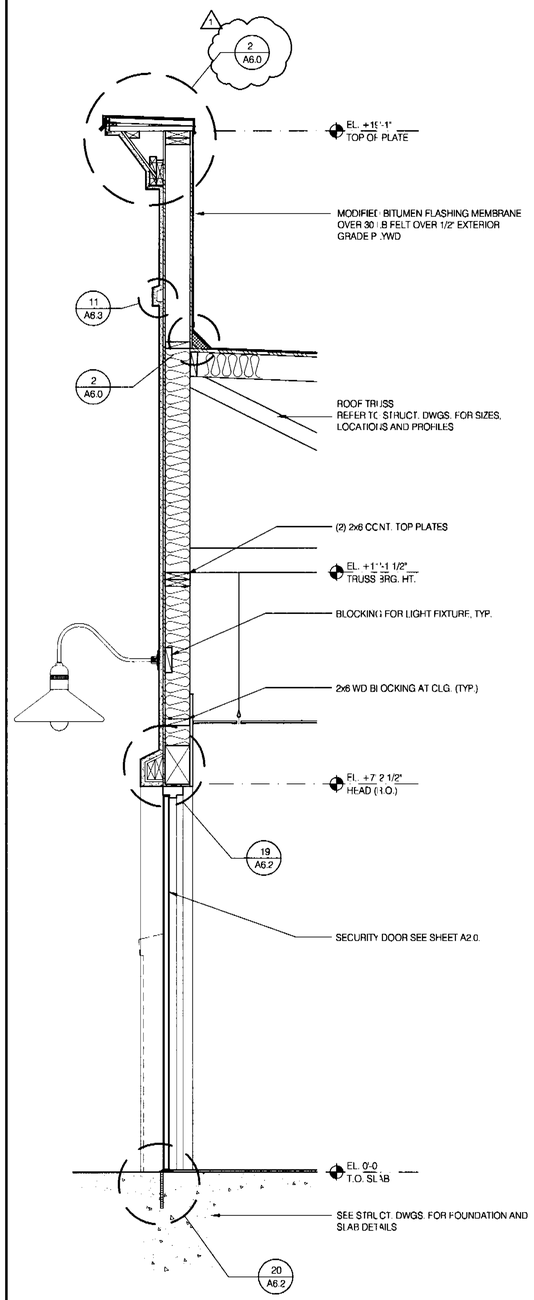

WALL SECTION AT SERVICE DOOR 3/4" = 1'-0" | F

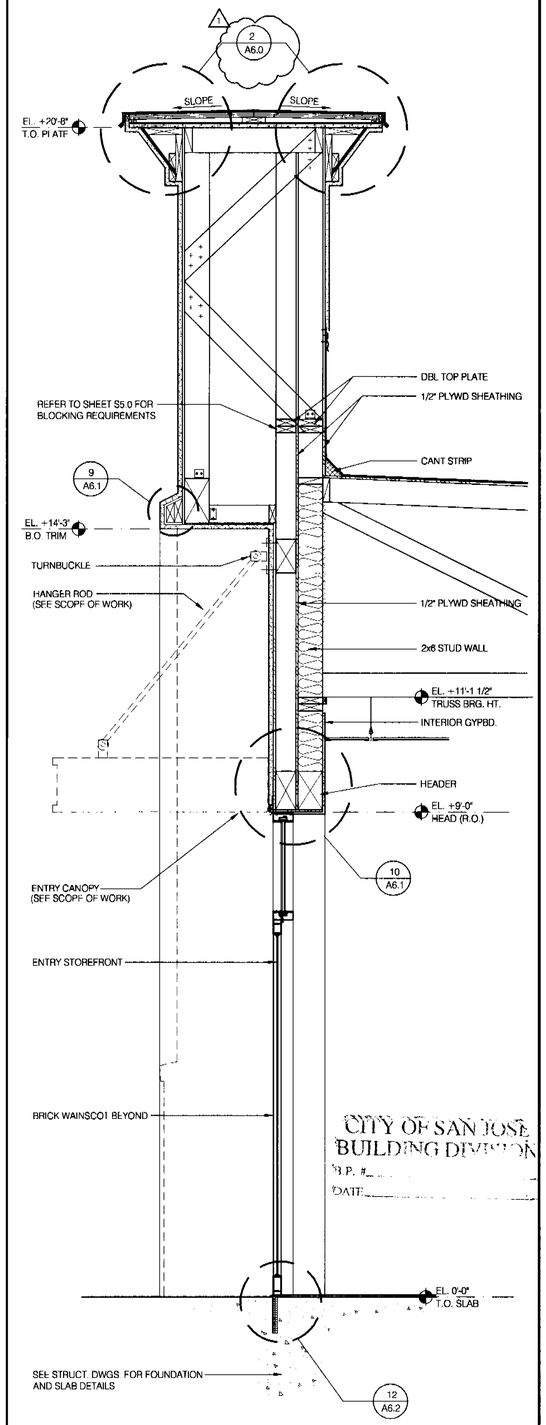

WALL SECTION AT REAR ENTRY 3/4" = 1'-0" | E

NOT USED N.T.S. | H

Vincent+Murphy
Incorporated

637 Fifth Avenue
San Rafael, Ca. 94901
(415) 451-2500
FAX 451-2595

LICENSED ARCHITECT
HUGH EDWARD MURPHY
No. C17928
REN. 10/31/07
STATE OF CALIFORNIA

JOB NUMBER
H0510

SUBMITTALS

03/24/06	BLDG PC#1 SUBMITTAL

REVISIONS

1	04/28/06 P.C. RESPONSE #1

CONTRACT DATE:
BUILDING TYPE: KA60-Y04
PLAN VERSION: JAN 05 D
SITE NUMBER:
STORE NUMBER:

KFC / A&W

3144 S. BASCOM AVENUE
SAN JOSE, CA. 95124-2022

KA60-Y04

WALL SECTIONS

A5.1

W:\Data\hermon\2005\H0510_san jose_bascom\03_cd_current\038_KA_Y04-A5_1.dwg modified by Dhanrajan at Jun 26, 2006 - 3:43pm

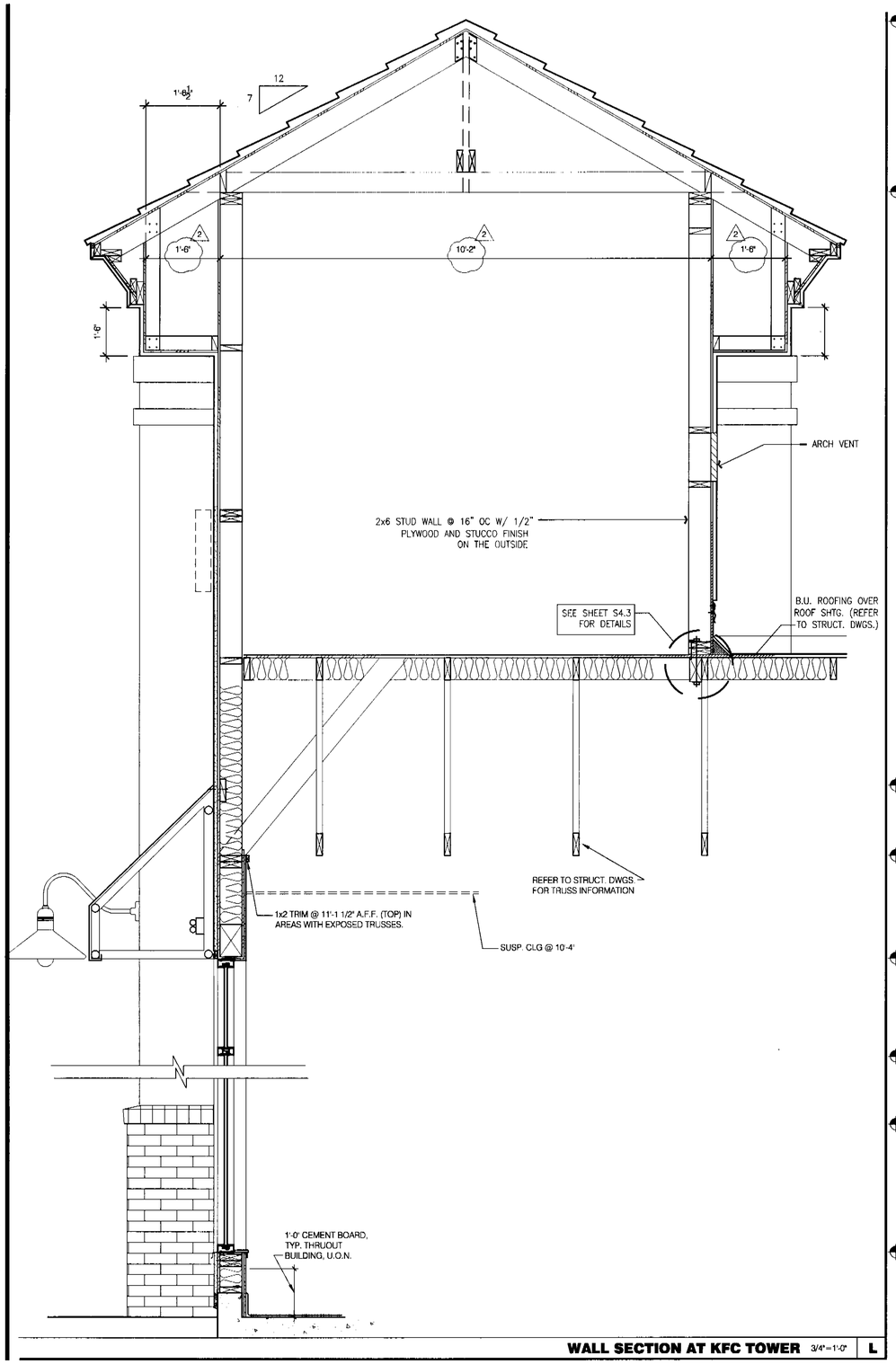

WALL SECTION AT KFC TOWER 3/4"=1'-0" **L**

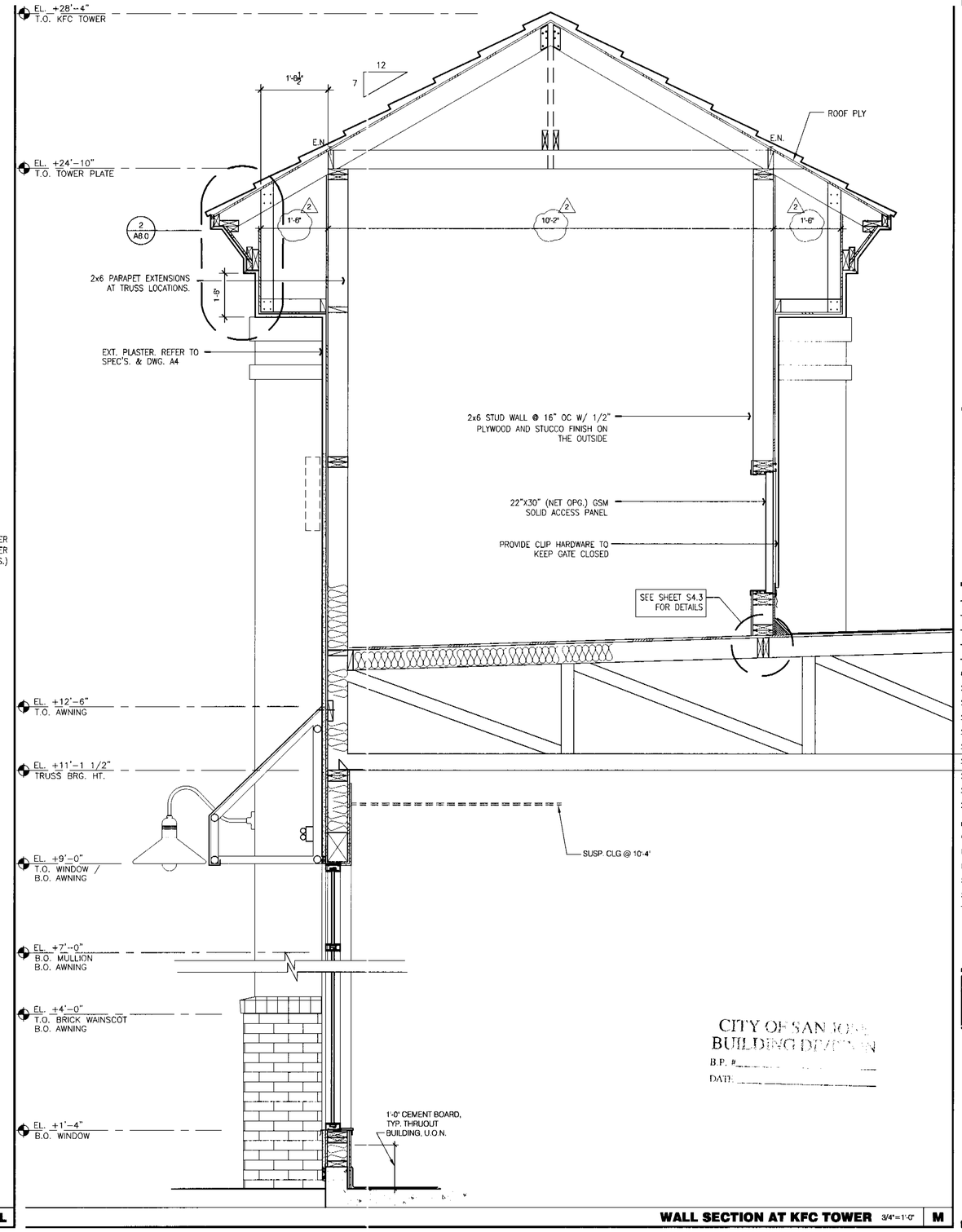

CITY OF SAN JOSE
BUILDING DIVISION
B.P. #
DATE:

WALL SECTION AT KFC TOWER 3/4"=1'-0" **M**

Vincent+Murphy Incorporated

637 Fifth Avenue
San Rafael, Ca. 94901
(415) 451-2500
FAX 451-2595

LICENSED ARCHITECT
JEFFREY EDWARD MURPHY
No. C17988
EXP. 10/31/07
STATE OF CALIFORNIA

JOB NUMBER
H0510

SUBMITTALS

03/24/06	BLD'G PC#1 SUBMITTAL

REVISIONS

1 06/23/06	P.C. RESPONSE #2
2	
3	
4	
5	
6	
7	
8	
9	

CONTRACT DATE:
BUILDING TYPE: KA60-Y04
PLAN VERSION: JAN 05 D
SITL NUMBER:
STORE NUMBER:

KFC / A&W

3144 S. BASCOM AVENUE
SAN JOSE, CA. 95124-2022

KA60-Y04

TOWER SECTIONS KFC

A5.2

W:\Data\Vernon\2005\H0510_san jose_bascom\03_cd_current\039_KA_Y04-A5_2.dwg modified by thanington at Jun 26, 2006 - 3:43pm

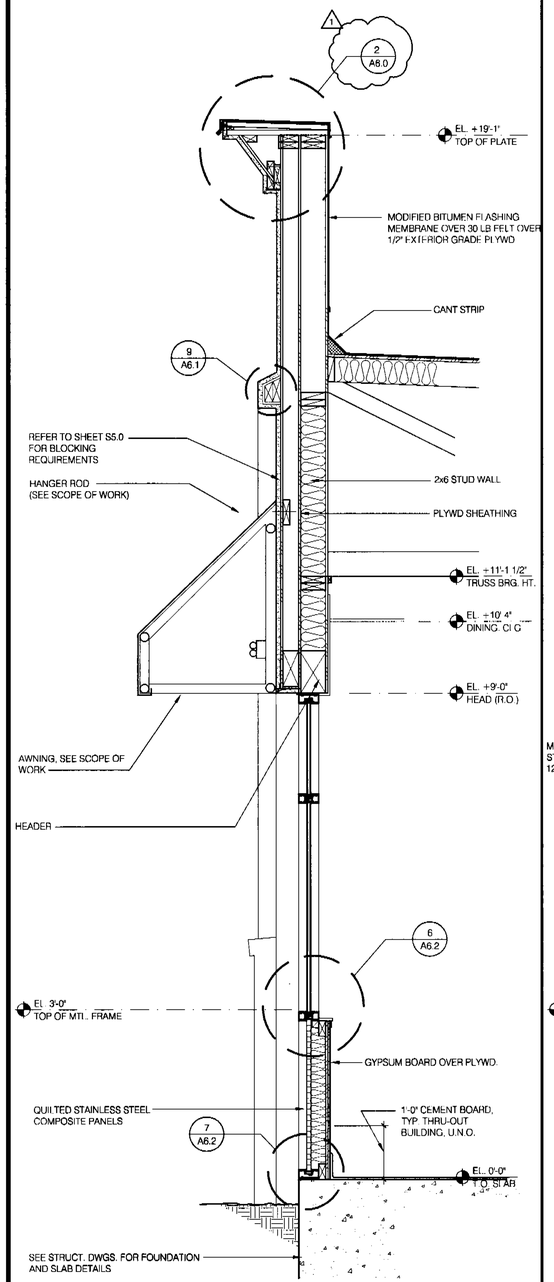

WALL SECTION AT DINING 3/4" = 1'-0" | R

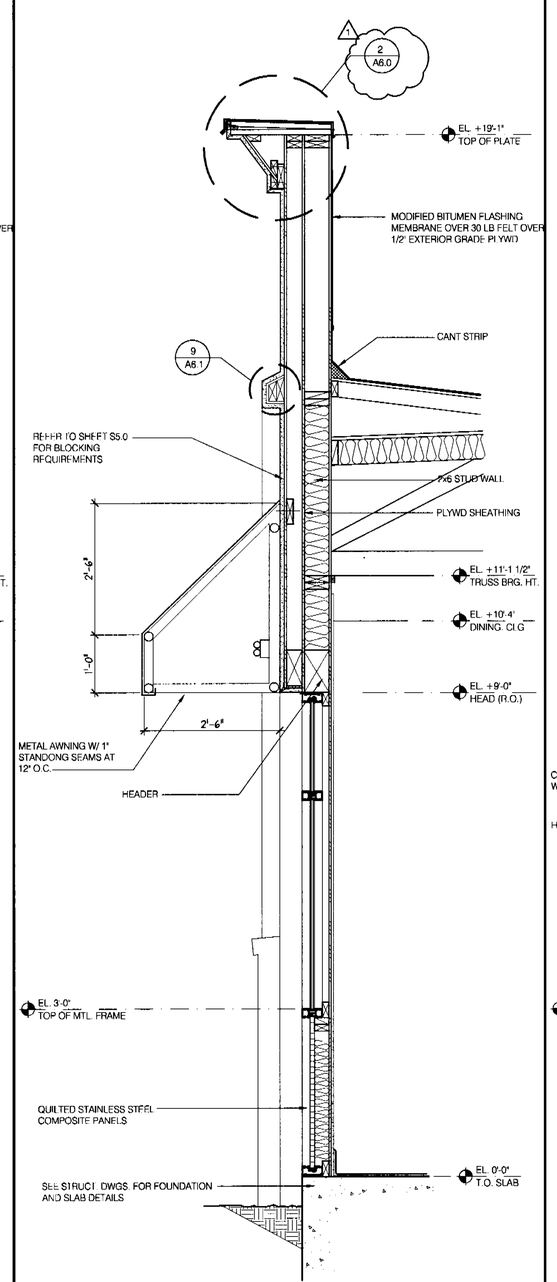

WALL SECTION AT SPANDREL / WOMEN 3/4" = 1'-0" | Q

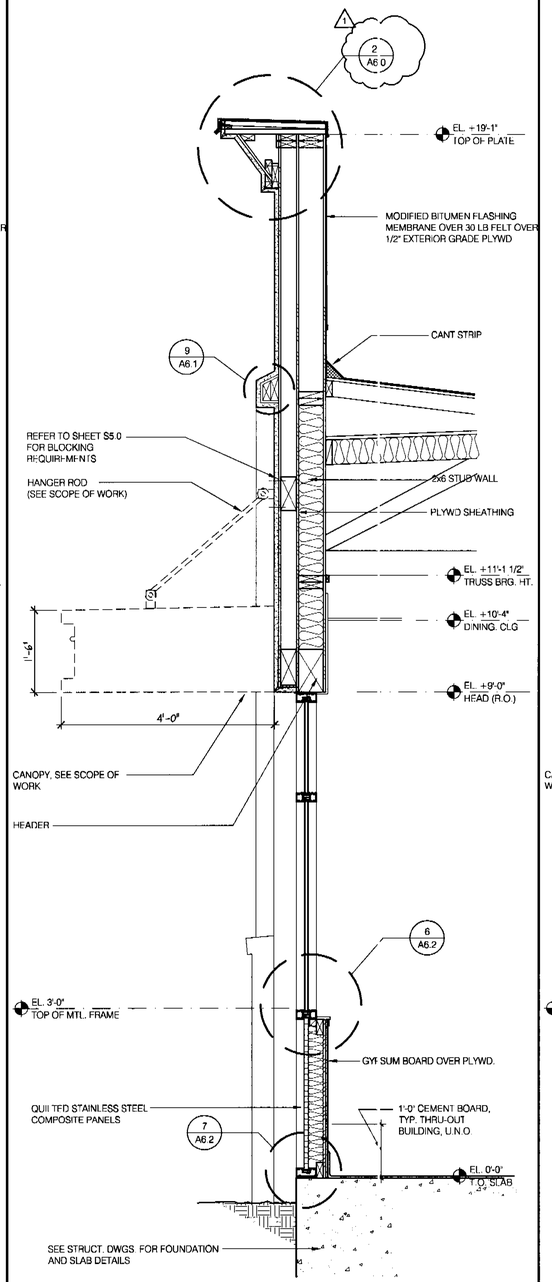

WALL SECTION AT SPANDREL 3/4" = 1'-0" | P

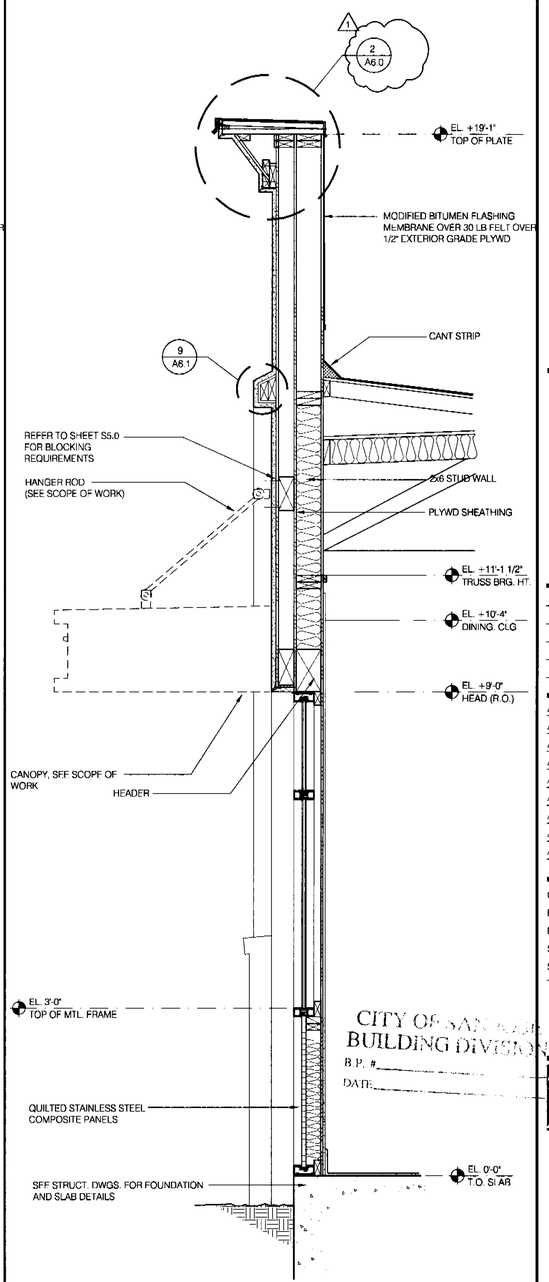

CITY OF SAN JOSE
BUILDING DIVISION
B.P. #
DATE:

WALL SECTION AT SPANDREL 3/4" = 1'-0" | N

Vincent+Murphy
Incorporated

637 Fifth Avenue
San Rafael, Ca. 94901
(415) 451-2500
FAX 451-2595

LICENSED ARCHITECT
HUGH EDWARD MURPHY
No. C17926
EXP. 10/31/07
STATE OF CALIFORNIA

JOB NUMBER
H0510

SUBMITTALS

03/24/06	BLDG PC#1 SUBMITTAL

REVISIONS

1	04/28/06	P.C. RESPONSE #1
2		
3		
4		
5		
6		
7		
8		
9		

CONTRACT DATE:
BUILDING TYPE: KA60-Y04
PLAN VERSION: JAN 05 D
SITE NUMBER:
STORE NUMBER:

KFC / A&W

3144 S. RASCOM AVENUE
SAN JOSE, CA 95124-2022

KA60-Y04

TOWER SECTIONS A & W

A5.3

J:\Data\harman\2005\H0510_san jose_bascom\03_cd_current\040_KA_Y04-A5_3.dwg modified by Dhonnigan at Jun 26, 2006 - 3:43pm

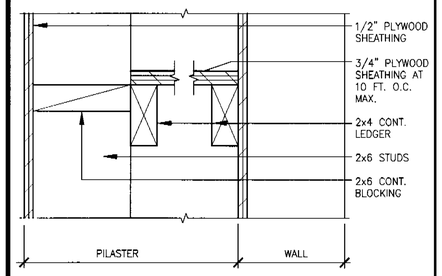

FIRE BLOCKING N.T.S. | 17

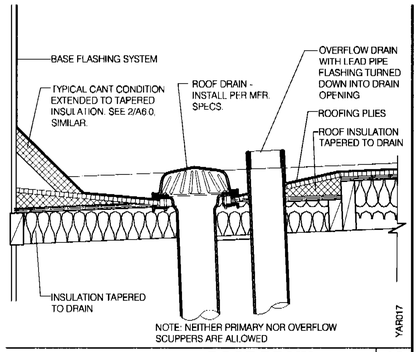

ROOF DRAIN 1-1/2"=1'-0" | 13

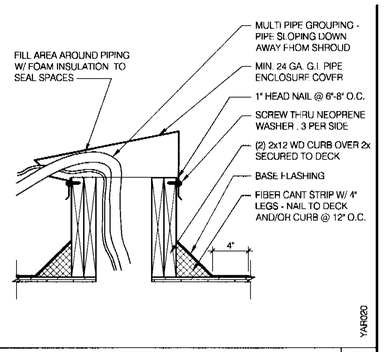

MULTIPLE PIPE FLASHING 1-1/2"=1'-0" | 9

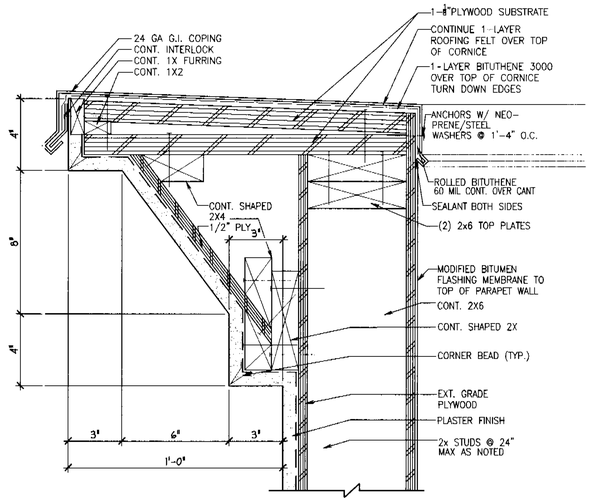

CORNICE DETAIL 3"=1'-0" | 2

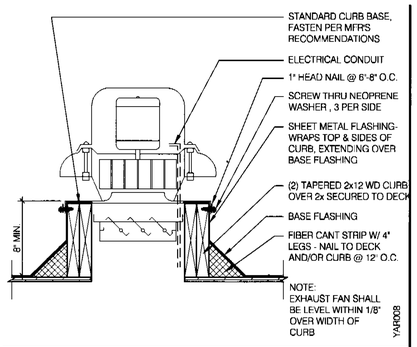

EXHAUST FAN CURB 1-1/2" = 1'-0" | 18

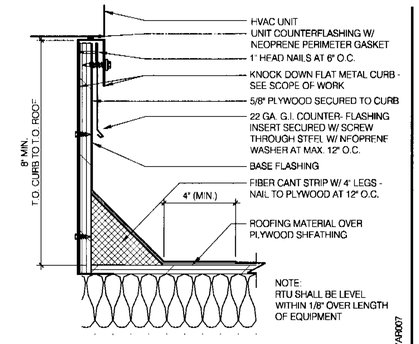

HVAC CURB 3"=1'-0" | 14

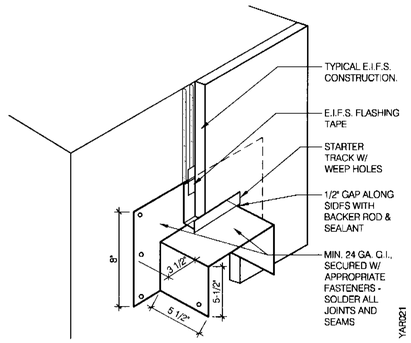

COPING TO TRANSITION N.T.S. | 10

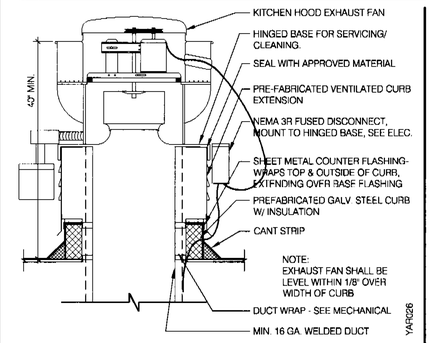

EXHAUST FAN CURB N.T.S. | 19

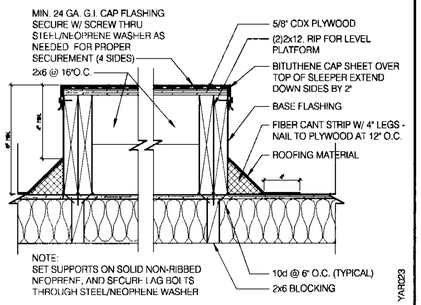

SLEEPER SUPPORT 1-1/2"=1'-0" | 15

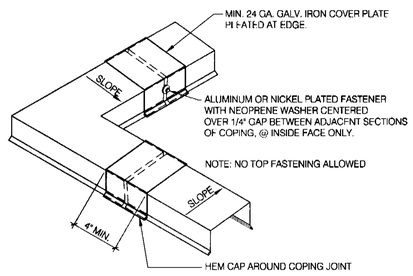

COPING JOINT DETAIL N.T.S. | 11

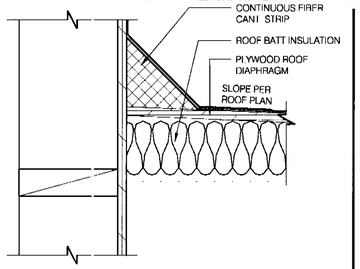

CRICKET 3"=1'-0" | 7

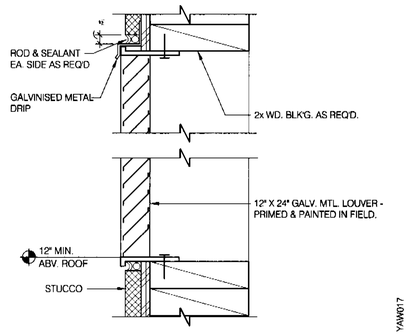

LOUVER DETAIL 3" = 1'-0" | 3

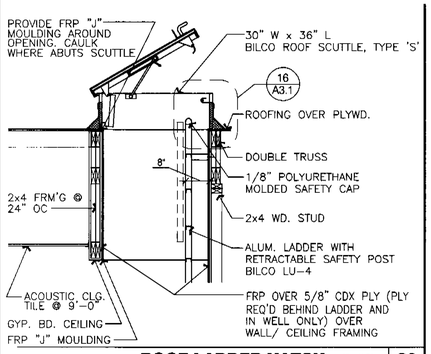

ROOF LADDER HATCH 1"=1'-0" | 20

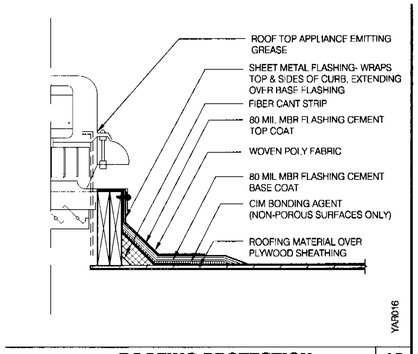

ROOFING PROTECTION NTS | 16

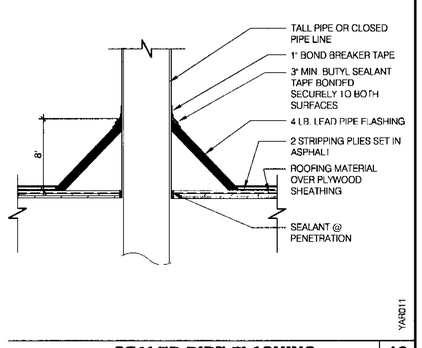

SEALED PIPE FLASHING 3"=1'-0" | 12

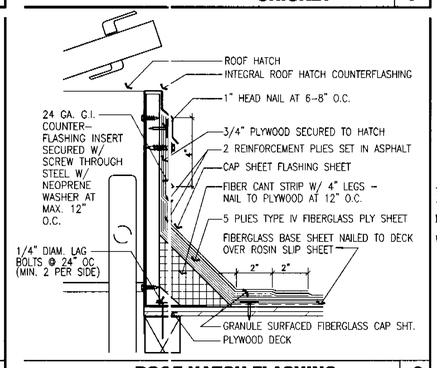

ROOF HATCH FLASHING 3"=1'-0" | 8

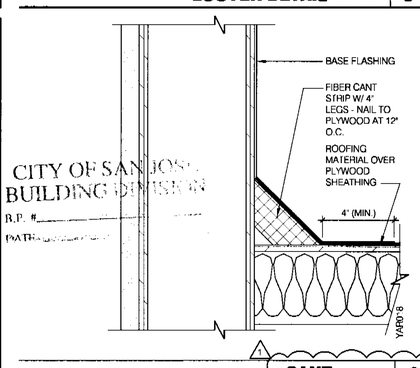

CANT 3"=1'-0" | 4

CITY OF SAN JOSE
BUILDING DIVISION
B.P. #
DATE

Vincent+Murphy Incorporated
637 Fifth Avenue
San Rafael, Ca. 94901
(415) 451-2500
FAX 451-2595

LICENSED ARCHITECT EDWARD MURPHY No. C17929 REN. 10/31/07 STATE OF CALIFORNIA

JOB NUMBER
H0510

SUBMITTALS

03/24/06	BLDG PC#1 SUBMITTAL

REVISIONS

1	04/28/06 P.C. RESPONSE #1

CONTRACT DATE:
BUILDING TYPE: KA60-Y04
PLAN VERSION: JAN 05 D
SITE NUMBER:
STORE NUMBER:

KFC / A&W
3144 S. BASCOM AVENUE
SAN JOSE, CA 95124 2022

All American Food

KA60-Y04

CONSTRUCTION DETAILS ROOF

A6.0

W:\Data\harman\2005\H0510_san jose_bascom\03_cd_current\042_KA_Y04-A6_0.dwg modified by dharmigan at Jun 26, 2006 - 3:43pm

NOT USED N.T.S. **17**

NOT USED N.T.S. **18**

NOT USED N.T.S. **19**

NOT USED N.T.S. **20**

NOT USED N.T.S. **13**

NOT USED N.T.S. **14**

NOT USED N.T.S. **15**

NOT USED N.T.S. **16**

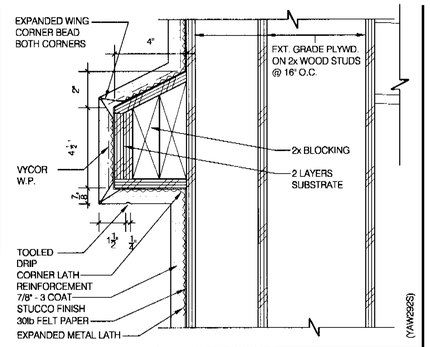

TRIM @ SIDE ENTRY 3"=1'-0" **9**

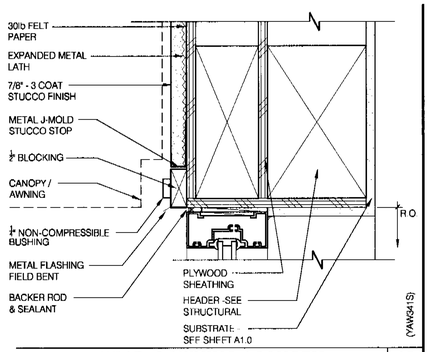

HEAD @AWNING / CANOPY 3" = 1'-0" **10**

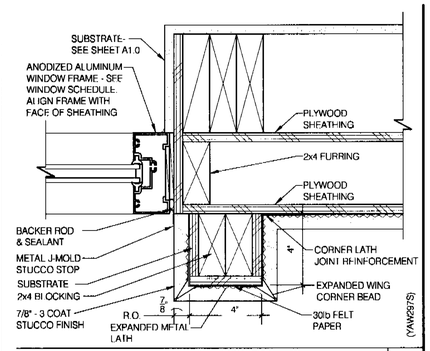

JAMB ABOVE BRICK @ SIDE ENTRY 3"=1'-0" **11**

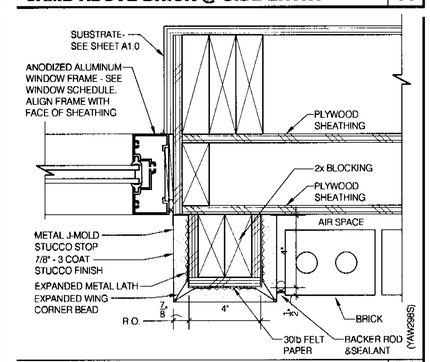

JAMB@ BRICK @ SIDE ENTRY 3"=1'-0" **12**

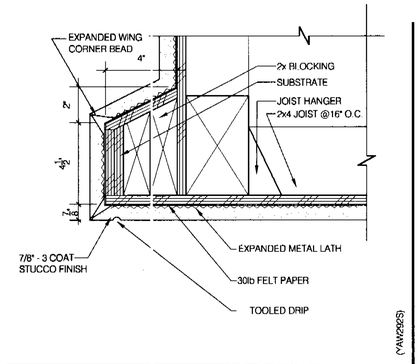

SOFFIT TRIM @ REAR ENTRY 3"=1'-0" **5**

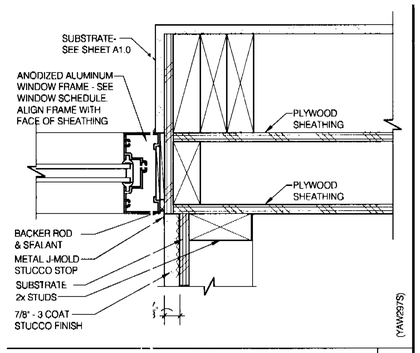

JAMB @ REAR ENTRY 3"=1'-0" **6**

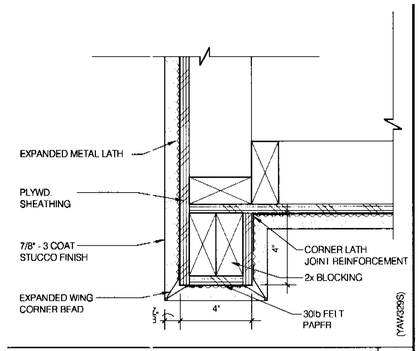

TRIM ABOVE BRICK @ REAR ENTRY 3"=1'-0" **7**

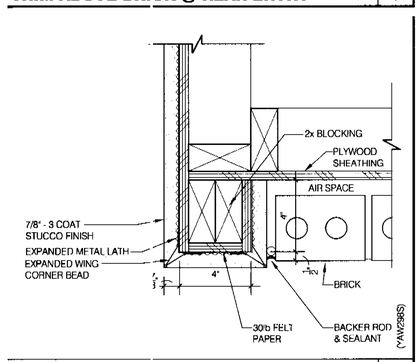

TRIM @ BRICK @ REAR ENTRY 3"=1'-0" **8**

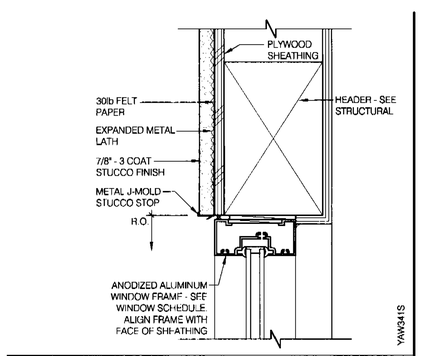

WINDOW HEAD @ TOWER 3"=1'-0" **1**

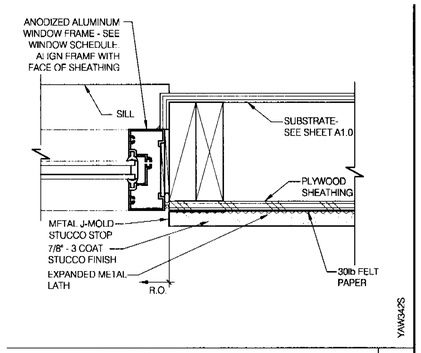

WINDOW JAMB @ TOWER 3"=1'-0" **2**

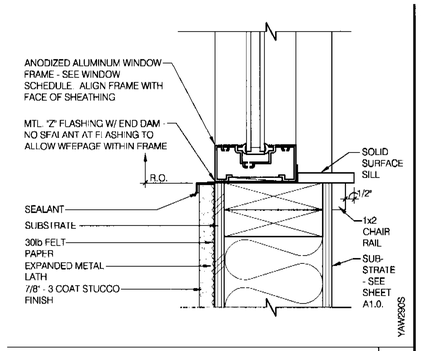

WINDOW SILL @ TOWER 3"=1'-0" **3**

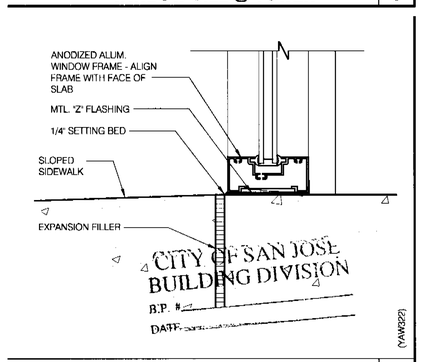

SILL @ ENTRY 3"=1'-0" **4**

Vincent+Murphy Incorporated

637 Fifth Avenue
San Rafael, Ca. 94901
(415) 451-2500
FAX 451-2595

LICENSED ARCHITECT
ROBERT EDWARD MURPHY
No. C17928
REN. 10/31/07
STATE OF CALIFORNIA

JOB NUMBER
H0510

SUBMITTALS

03/24/06	BLD'G PC#1 SUBMITTAL

REVISIONS

CONTRACT DATE:
BUILDING TYPE: KA60-Y04
PLAN VERSION: JAN 05 D
SITE NUMBER:
STORE NUMBER:

KFC / A&W

3144 S. BASCOM AVENUE
SAN JOSE, CA 95124-2022

All American Foods

KA60-Y04

CONSTRUCTION DETAILS DOOR/WINDOW

A6.1

W:\data\herman\2005\H0510_sch jose_bascom\03_cd_current\043_KA_Y04-A6_1.dwg modified by Dhanagan at Jun 26, 2006 - 3:43pm

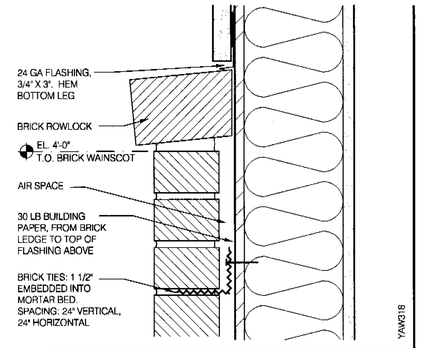

BRICK WAINSCOT 3"=1'-0" | 17

NOT USED N.T.S. | 13

NOT USED N.T.S. | 9

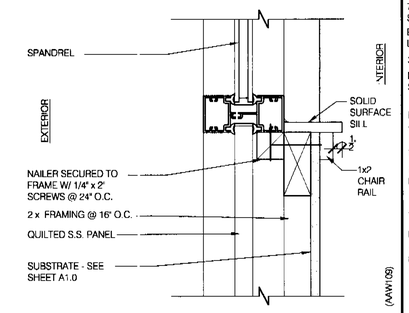

SILL @ A&W WINDOW 3" = 1'-0" | 5

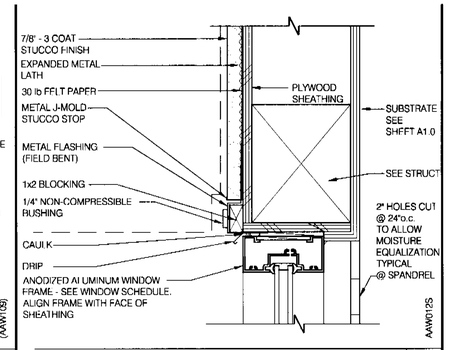

A&W WINDOW HEAD @ CANOPY 3"=1'-0" | 1

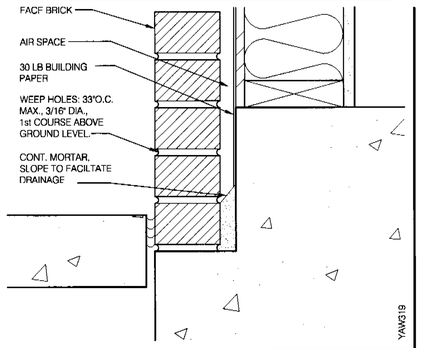

BRICK WAINSCOT 3"=1'-0" | 18

NOT USED N.T.S. | 14

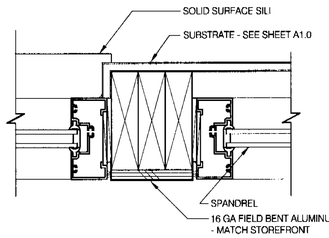

JAMB AT A&W WINDOW 3" = 1'-0" | 10

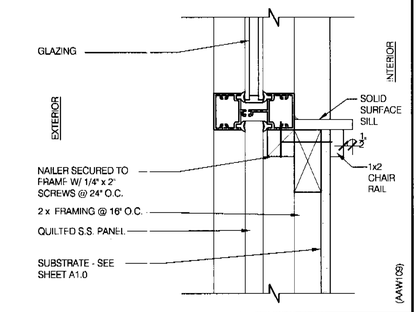

SILL @ A&W WINDOW 3"=1'-0" | 6

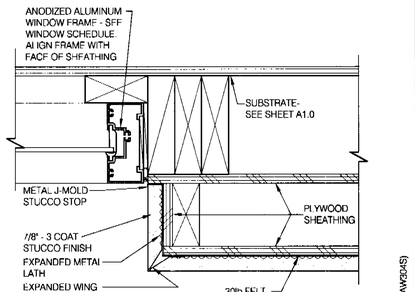

A&W WINDOW JAMB ABOVE BRICK 3"=1'-0" | 2

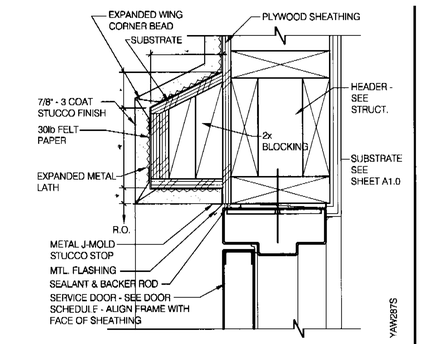

SERVICE DOOR HEAD/JAMB 3"=1'-0" | 19

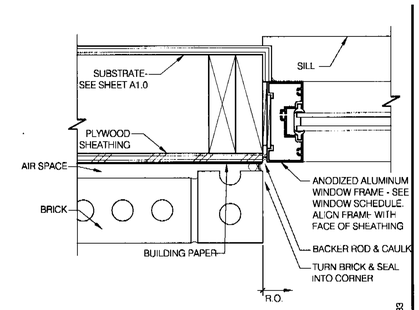

JAMB @ A & W WINDOW 3"=1'-0" | 11

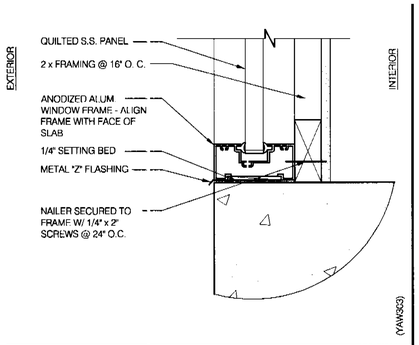

SILL @ PANEL 3"=1'-0" | 7

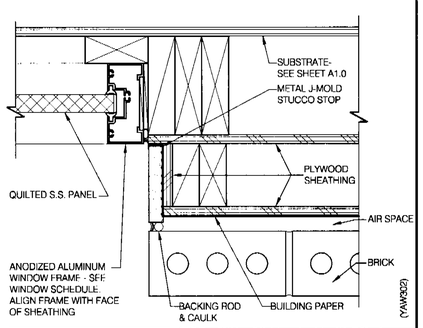

S.S. PANEL WINDOW JAMB @BRICK 3"=1'-0" | 3

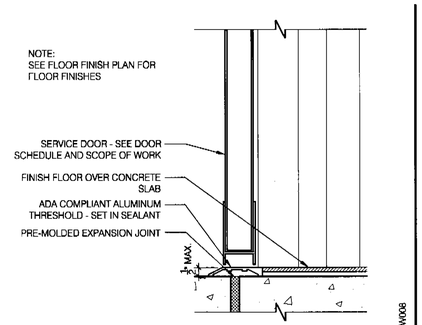

SERVICE DOOR THRESHOLD 3"=1'-0" | 20

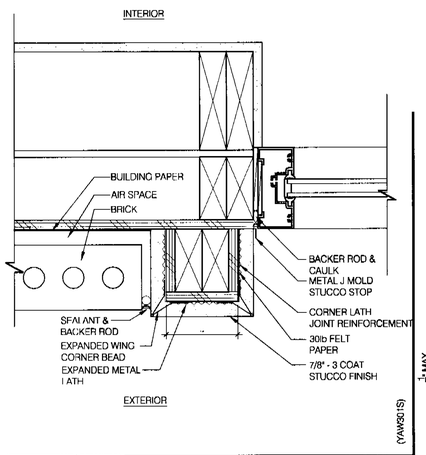

JAMB @ BRICK @ EXP. PANEL 3"=1'-0" | 16

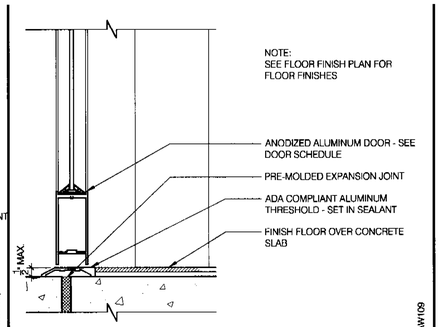

STOREFRONT DOOR SILL 3" = 1'-0" | 12

NOT USED N.T.S. | 8

CITY OF SAN JOSE
BUILDING DIVISION
B.P. #
DATE

NOT USED N.T.S. | 4

Vincent+Murphy Incorporated

637 Fifth Avenue
San Rafael, Ca. 94901
(415) 451-2500
FAX 451-2595

LICENSED ARCHITECT
HUGH EDWARD MURPHY
No. C17928
REN. 10/31/07
STATE OF CALIFORNIA

JOB NUMBER
H0510

SUBMITTALS

03/24/06	BLD'G PC#1 SUBMITTAL

REVISIONS

CONTRACT DATE:
BUILDING TYPE: KA60-Y04
PLAN VERSION: JAN 05 D
SITE NUMBER:
STORE NUMBER:

KFC / A&W

3144 S. BASCOM AVENUE
SAN JOSE, CA 95124-2022

All American Food

KA60-Y04

CONSTRUCTION DETAILS WALL, DOOR & WINDOW

A6.2

W:\data\harman\2005\H0510_san jose_bascom\03_cd_current\044_KA_Y04-A6_2.dwg modified by Dhamigan at Jun 26, 2006 - 3:44pm

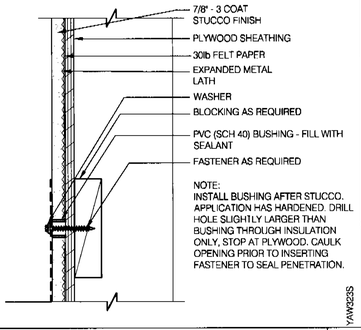

CONNECTION THRU STUCCO 3" = 1'-0" | 17

NOT USED NTS | 13

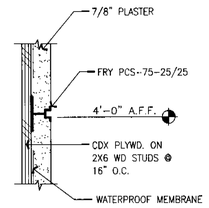

PLASTER CONTROL JOINT (UON) 3"=1'-0" | 9

SOFFIT DRIP DETAIL 3"=1'-0" | 5

NOT USED N.T.S. | 18

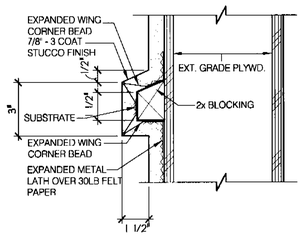

UPPER TRIM BAND DETAIL 3"=1'-0" | 10

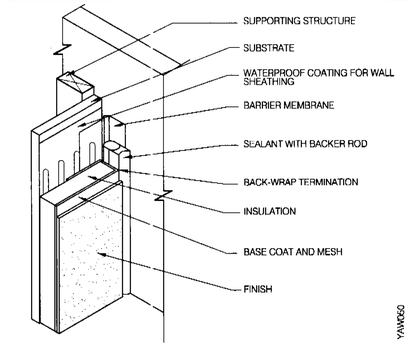

TYP. E.I.F.S. @ INSIDE CORNER N.T.S. | 6

NOT USED | 2

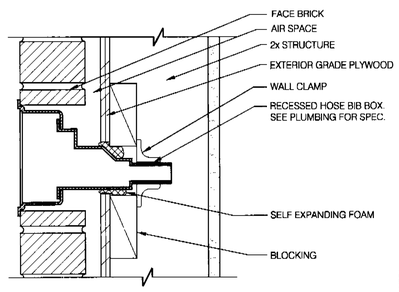

HOSE BIB 3" = 1'-0" | 19

NOT USED NTS | 15

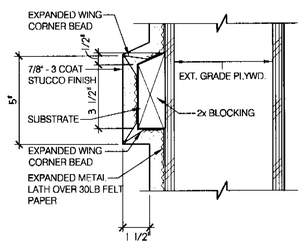

STUCCO BAND DETAIL 3" = 1'-0" | 11

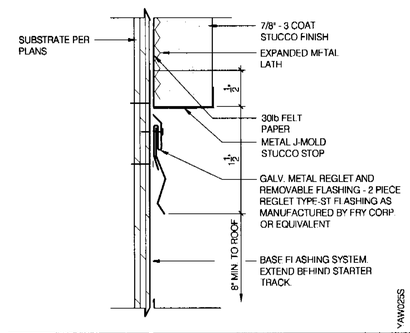

STUCCO TO BASE FLASHING N.T.S. | 7

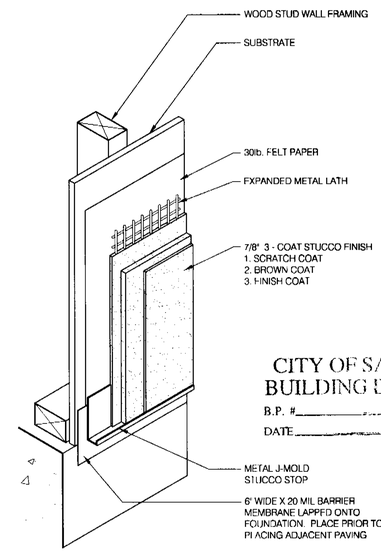

TYP. STUCCO BASE TERMINATION N.T.S. | 4

NOT USED NTS | 20

FLASHING @ TOP OF WALK-IN 1" = 1'-0" | 16

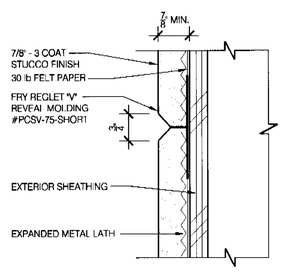

STUCCO V-GROOVE 6" = 1'-0" | 12

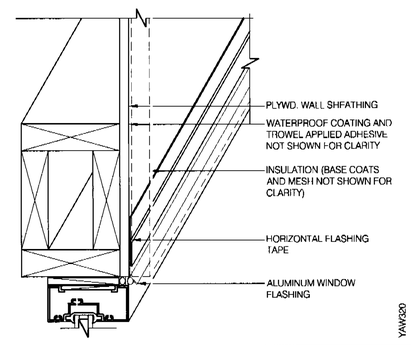

TYP. FLASHING TAPE N.T.S. | 8

Vincent+Murphy Incorporated

637 Fifth Avenue
San Rafael, Ca. 94901
(415) 451-2500
FAX 451-2595

LICENSED ARCHITECT HUGH EDWARD MURPHY No. C17928 Exp. 10/31/07 STATE OF CALIFORNIA

JOB NUMBER
H0510

SUBMITTALS

03/24/06	BLD'G PC#1 SUBMITTAL

REVISIONS

CONTRACT DATE:
BUILDING TYPE: KA60-Y04
PLAN VERSION: JAN 05 D
SITE NUMBER:
STORE NUMBER:

KFC / A&W

3144 S. BASCOM AVENUE
SAN JOSE, CA 95124-2022

CITY OF SAN
BUILDING DIV
B.P. #
DATE
KA60-Y04

CONSTRUCTION DETAILS WALL

A6.3

W:\Data\hermen\2005\M510_san jose_bascom\03_cd_current\044_KA_Y04-A6_3.dwg modified by dthornigan at Jun 26, 2006 - 3:44pm

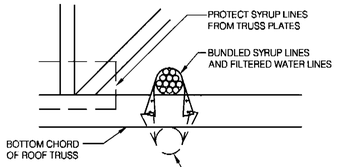

SYRUP LINE IN CEILING N.T.S. **17**

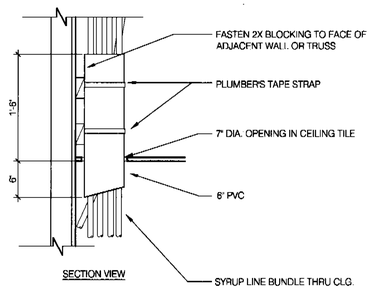

SYRUP BUNDLE CLG. PENETRATION N.T.S. **18**

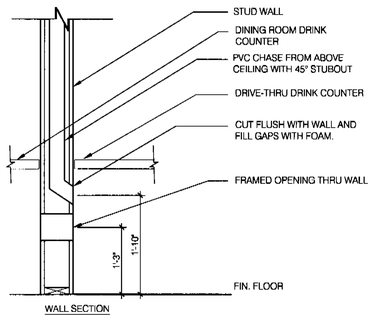

SYRUP CHASE IN WALL N.T.S. **19**

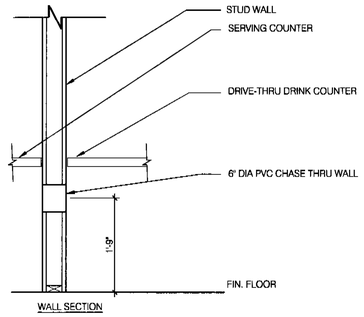

CHASE THRU WALL 3/4" = 1'-0" **20**

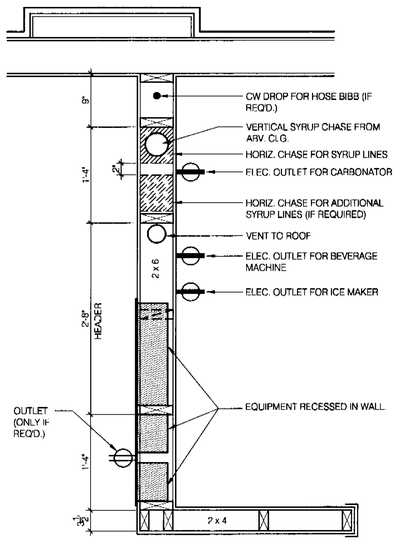

INTERIOR CHASE WALL 1" = 1'-0" **14**

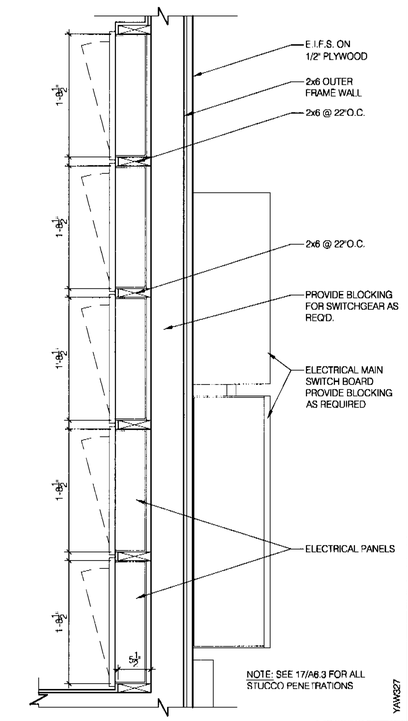

ELECTRICAL PANELS 1" = 1'-0" **16**

NOT USED N.T.S. **9**

NOT USED 6"=1'-0" **10**

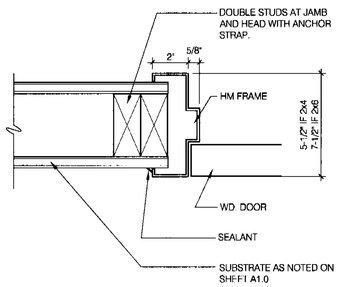

JAMB @ H.M. DOOR 3" = 1'-0" **11**

NOT USED N.T.S. **12**

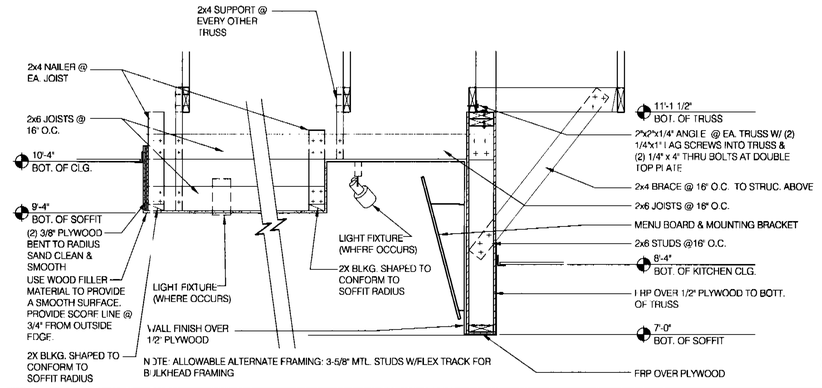

MENU BOARD SECTION 3/4" = 1'-0" **1**

NOT USED N.T.S. **6**

NOT USED N.T.S. **2**

NOT USED N.T.S. **4**

CITY OF SAN JOSE
BUILDING DIVISION
B.P. #
DATE

Vincent+Murphy
Incorporated

637 Fifth Avenue
San Rafael, Ca. 94901
(415) 451-2500
FAX 451-2595

LICENSED ARCHITECT
HUGH EDWARD MURPHY
No. C17928
EXP. 10/31/07
STATE OF CALIFORNIA

JOB NUMBER
H0510

SUBMITTALS

03/24/06	BLD'G PC#1 SUBMITTAL

REVISIONS

CONTRACT DATE:
BUILDING TYPE: KA60-Y04
PLAN VERSION: JAN 05 D
SITE NUMBER:
STORE NUMBER:

KFC / A&W

3144 S. BASCOM AVENUE
SAN JOSE, CA 95124-2022

ALL AMERICAN FOOD

KA60-Y04

CONSTRUCTION DETAILS INTERIOR

A6.4

W:\Data\hermon\2005\H0510_san jose_bascom\03_cd_current\045_KA_Y04-A6_4.dwg modified by Dhennigan at Jun 26, 2006 - 3:44pm

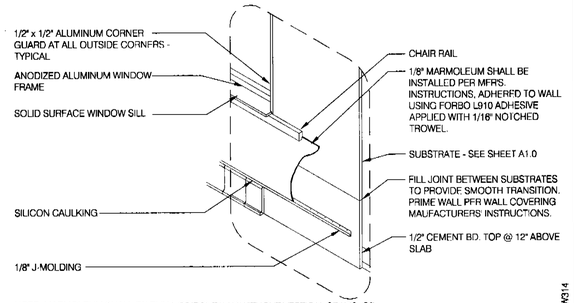

NOTE: MARMOLEUM SHALL BE RUN HORIZONTALLY WITHOUT VERTICAL SEAMS, OR ORIENTED VERTICALLY WITH THE SEAMS WELDED PER THE MANUFACTURER'S INSTRUCTIONS.

MARMOLEUM ATTACHMENT DETAIL N.T.S. | **13**

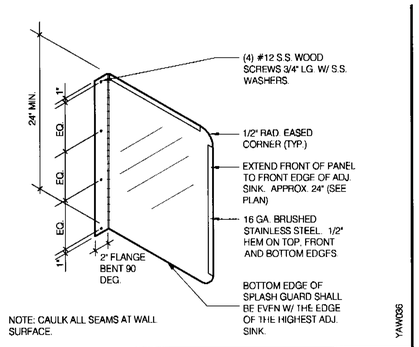

NOTE: CAULK ALL SEAMS AT WALL SURFACE.

SPLASH GUARD 1" = 1'-0" | **9**

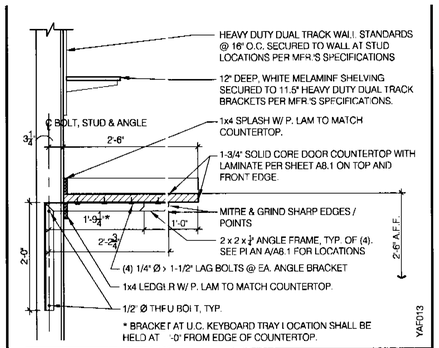

OFFICE COUNTER 3/4" = 1'-0" | **5**

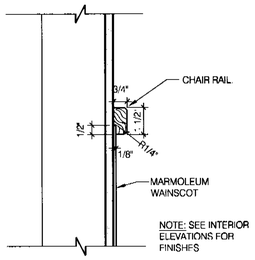

NOTE: SEE INTERIOR ELEVATIONS FOR FINISHES

SECTION AT CHAIR RAIL 3" = 1'-0" | **1**

NOT USED N.T.S. | **18**

NOT USED N.T.S. | **14**

NOT USED N.T.S. | **10**

NOT USED - | **6**

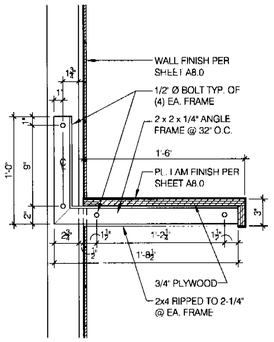

BOOSTER CHAIR COUNTER 1 1/2" = 1'-0" | **2**

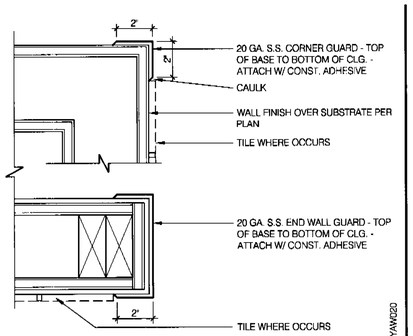

CORNER GUARD 3" = 1'-0" | **19**

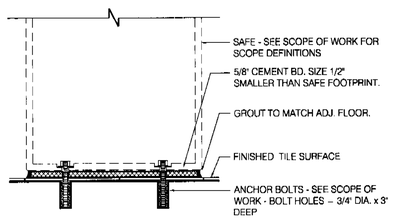

SAFE PEDESTAL 1" = 1'-0" | **15**

NOT USED N.T.S. | **11**

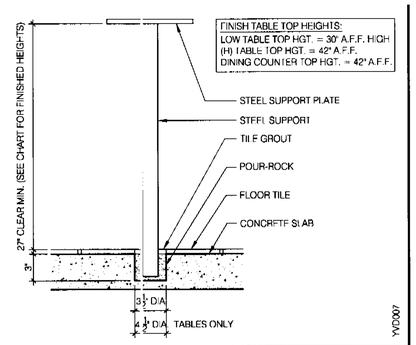

CORE DRILL 1 1/2" = 1'-0" | **7**

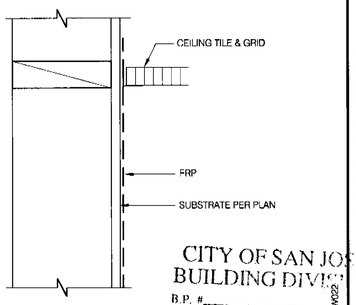

CITY OF SAN JOSE
BUILDING DIVISION
B.P. #
DATE:

KITCHEN FINISH @ CEILING 3" = 1'-0" | **3**

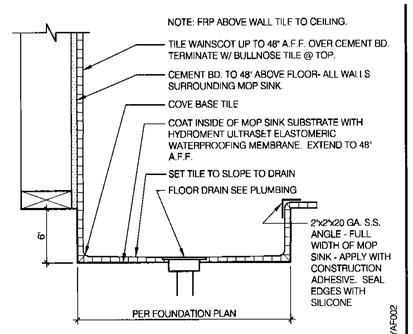

MOP SINK SECTION 1-1/2" = 1'-0" | **20**

NOT USED N.T.S. | **16**

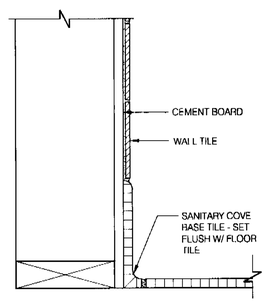

BASE IN RESTROOM 3" = 1'-0" | **12**

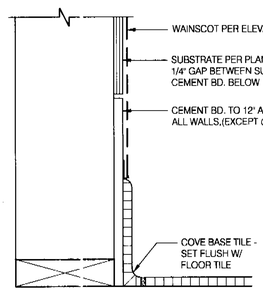

BASE IN DINING ROOM 3" = 1'-0" | **8**

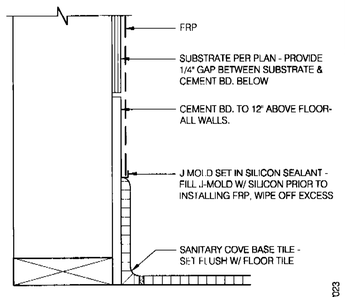

KITCHEN FINISH @ BASE 3" = 1'-0" | **4**

Vincent+Murphy Incorporated

637 Fifth Avenue
San Rafael, Ca. 94901
(415) 451-2500
FAX 451-2595

LICENSED ARCHITECT HUGH EDWARD MURPHY No. C17926 EXP. 10/31/07 STATE OF CALIFORNIA

JOB NUMBER
TT0510

SUBMITTALS

03/24/06	BLDG PC#1 SUBMITTAL

REVISIONS

CONTRACT DATE:
BUILDING TYPE: KA60-Y04
PLAN VERSION: JAN 05 D
SITE NUMBER:
STORE NUMBER:

KFC / A&W

3144 S. BASCOM AVENUE
SAN JOSE, CA 95124-2022

All American Food

KA60-Y04

FINISH DETAILS

A6.5

W:\Data\herman\2005\H0510_san jose_bascom\03_cd_current\046_KA_Y04-A6_5.dwg modified by Dharrington at Jun 26, 2006 - 3:44pm

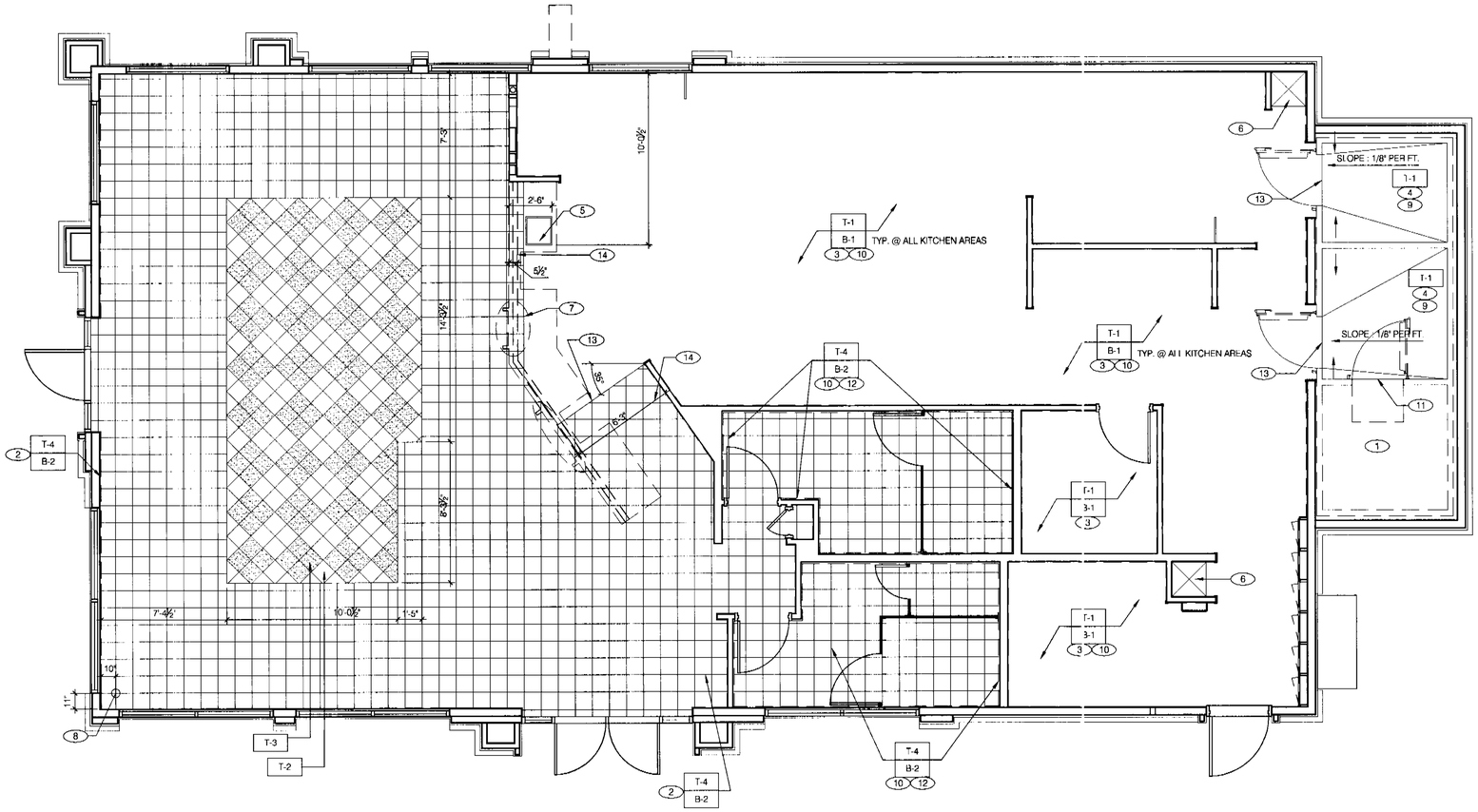

FLOOR FINISH PLAN 1/4" = 1'-0" **A**

NOT USED **F**

A. ▭ DENOTES FINISH MATERIAL. REFER TO SHT A7.2 FOR FINISHES.

B. TILE JOINTS (U.O.N.):
1. QUARRY FLOOR TILE : 1/4"
2. PORCELAIN FLOOR TILE : 3/16"
3. GLAZED WALL TILE : 1/8"
4. BASE, TRIM AND ACCESSORIES : MATCH ADJOINING TILE UNITS

C. TILE INSTALLATIONS REQUIRE MANUFACTURERS STANDARD MOLDED CORNERS AT BOTH INSIDE AND OUTSIDE CORNERS.

D. ALL BASE TILE SHALL BE SANITARY COVE STYLE WITH 3/8" MIN RADIUS.

E. SEE SCOPE OF WORK SHEETS FOR RESPONSIBILITIES.

F. PROVIDE CLEAR SILICONE CAULK WHERE FRP STOPS AT TOP OF COVE BASE.

G. PROVIDE CLEAR SILICONE CAULK WHERE ALL FIXED AND BUILT-IN COUNTERS / EQUIPMENT ABUTS WALL SURFACE. WHERE GAP BETWEEN WALL AND COUNTER SPLASH / EQUIPMENT EXCEEDS 1/4", PROVIDE S.S. CLOSURE ANGLE.

H. TILE CHIPPING AROUND CORE DRILL HOLES FOR SEATING FIXTURE WILL NOT BE ACCEPTED.

I. ALL DIMENSIONS FOR CORE DRILLS SHALL BE FROM FACE OF GYP. BD.

J. VERIFY ALL DIMENSIONS WITH SEATING VENDOR PRIOR TO INSTALLATION.

K. VERIFY CORE DRILL LOCATIONS FOR DINING COUNTER WALL LEGS WITH VENDOR.

L. SEE DETAIL 7/A6.5 FOR TYP. CORE DRILL.

FINISH NOTES **D**

1. FACTORY FLOOR FINISH (GAL.V STL) W/ INTEGRAL COVE BASE AND BUILT-IN INT. RAMP IN WALK-IN FREEZER.
2. 6" COVE TILE BASE. SEE DETAIL 8/A6.5 FOR INSTALLATION.
3. 6" SANITARY COVE TILE BASE. SEE DETAIL 4/A6.5.
4. PROVIDE FLOOR TILE INSIDE WALK-IN COOLER (NO TILE OR BASE IN FREEZER). FLOAT FLOOR TILE IN COOLERS TO DRAIN TO KITCHEN. COORD. WITH COOLER WALL CONFIGURATION.
5. PLATFORM FOR SAFE. - SEE DETAIL 15/A6.5.
6. DEPRESSED FLOOR AT MOP SINK AREAS. SEE DETAIL 20/A6.5.
7. FLOOR TILE SHALL TRANSITION AT SERVICE COUNTER WALL.
8. START POINT FOR FLOOR TILE.
9. METAL BASE IN COOLER; SEE SCOPE OF WORK.
10. REFER TO STRUCT DRAWINGS FOR CONC FLOOR SLOPES AROUND FLOOR DRAINS.
11. FLOAT FLOOR TILE TO MEET FREEZER FLOOR FLUSH. COORD WITH FREEZER THRESHOLD INSTALLATION.
12. SANITARY TILE BASE IN RESTROOMS. SEE DETAIL 12/A6.5 FOR INSTALLATION.
13. FLOAT FLOOR TILE FOR FLUSH TRANSITION.
14. DIMENSION STRING REPRESENTS LINE OF FLOOR TILE TRANSITION.

CITY OF SAN JOSE
BUILDING DIVISION
B.P. #_____
DATE_____

KEY NOTES **B**

Vincent+Murphy
Incorporated

637 Fifth Avenue
San Rafael, Ca. 94901
(415) 451-2500
FAX 451-2595

LICENSED ARCHITECT
HUGH EDWARD MURPHY
No. C17928
REN. 10/31/07
STATE OF CALIFORNIA

JOB NUMBER
II0510

SUBMITTALS

03/24/06	BLDG PC#1 SUBMITTAL

REVISIONS

CONTRACT DATE:
BUILDING TYPE: KA60-Y04
PLAN VERSION: JAN 05 D
SITE NUMBER:
STORE NUMBER:

KFC / A&W

3144 S. BASCOM AVENUE
SAN JOSE, CA. 95124-2022

KA60-Y04

FLOOR FINISH PLAN

A7.0

W:\Data\kermar\2005\II0510_san jose_bascom\03_cd_current\KA_KA_Y04-A7_0.dwg modified by Dhanagan at Jun 26, 2006 - 3:44pm

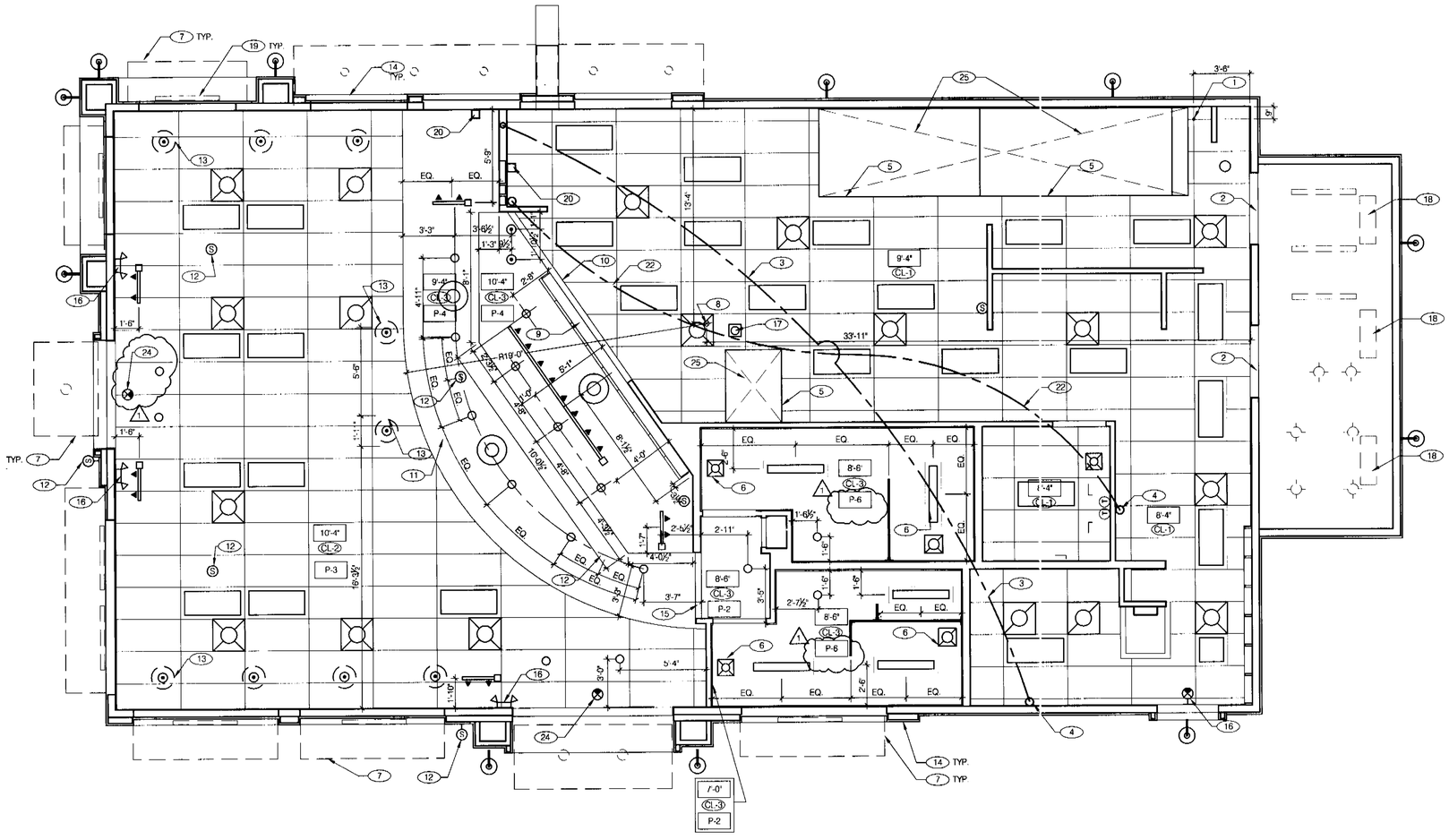

REFLECTED CEILING PLAN 1/4"=1'-0" A

NOT USED F

CEILING SYMBOL LEGEND E

- 1'-0" x 4'-0" FLUORESCENT LIGHT FIXTURE
- 2' 0" x 4'-0" FLUORESCENT LIGHT FIXTURE
- DOWNLIGHT @ WALK-IN (BY WALK-IN MFR.)
- SUSPENDED DOWNLIGHT AT OPEN TRUSS
- PENDANT FIXTURE
- DOWNLIGHT
- EMERGENCY LIGHTS
- EXIT LIGHT (WALL MOUNTED)
- EXIT LIGHT (CEILING MOUNTED)
- PENDANT OR DIRECTIONAL FIXTURE, TRACK MOUNTED
- EXTERIOR WALL FIXTURE
- SPEAKER
- 12" EXHAUST FAN
- HVAC RETURN GRILLE
- HVAC SUPPLY DIFFUSER
- HVAC SUPPLY DIFFUSER
- HVAC PERFORATED SUPPLY DIFFUSER
- BACK DOOR SECURITY STROBE LIGHT
- EXTERIOR CANOPY FLUORESCENT LIGHT

REFLECTED CEILING PLAN NOTES D

DIMENSIONS:
A. ALL DIMENSIONS ARE TO FACE OF FINISH U.O.N.

CEILING FINISHES:
A. REFER TO ROOM FINISH SCHEDULE (SHT A7.2) FOR CLG. FINISHES.

SUSPENDED CEILING:
A. ACOUSTICAL PANEL INSTALLATION: INSTALL ACOUSTICAL PANELS WITH EDGES IN CLOSE CONTACT WITH METAL SUPPORTS AND IN TRUE ALIGNMENT.
B. ALLOWABLE VARIATIONS FROM FLAT AND LEVEL SURFACE: 1/8" IN 10'-0" MAX.
C. ALLOWABLE VARIATIONS FROM PLUMB OF GRID MEMBERS: AS CAUSED BY ECCENTRIC LOADS, 2" MAX.
D. INSTALL SYSTEM AFTER MAJOR ABOVE CLG. WORK IS COMPLETE. COORD LOCATIONS OF HANGERS WITH RELATED WORK.
E. SEE SPECS FOR ADDITIONAL INFORMATION.

GYPSUM BOARD CEILING:
A. SUBSTRATE SHALL BE 1/2" THICK GYP BD.
B. ACOUSTICAL SEALANT: APPLY TO GYP. BD. PANELS AS INDICATED IN SPECS.
GYP. BD. FINISHING AND DECORATING: REFER TO DWGS FOR TEXTURE AND FINISHES.

ELECTRICAL:
A. SEE ELECT. DWGS. FOR FIXTURE SCHED.

KEY NOTES B

1. CEILING GRID STARTING POINT.
2. WALK-IN COOLER BULKHEAD @ 7'-8" A.F.F.
3. NON-INSULATED BUNDLED SYRUP LINES FOR DRINK SYSTEM. SEE SCOPE OF WORK.
4. 6" DIA PVC STUB THROUGH CEILING. SEE DETAIL 18/A6.4.
5. HOOD.
6. FOR ROUGH FRAMING OPENINGS SEE AIR DEVICE SCHED. (TYP. AT RESTROOMS).
7. AWNINGS & CANOPIES. SEE SCOPE OF WORK.
8. CENTER OF SERVING COUNTER BULKHEAD RADIUS.
9. MENU BOARD. SEE SCOPE OF WORK.
10. MENU BOARD BULKHEAD- BOTTOM OF SOFFIT AT 7'-0" A.F.F. SEE DETAIL 1/A6.4.
11. SERVING COUNTER SOFFIT. SEE DETAIL 1/A6.4.
12. SPEAKER
13. PENDANT LTG - CENTER OVER TABLE TOP (TYP).
14. EXTERIOR WALL LIGHT FIXTURES, SEE ELEVATIONS AND ELECT. DWGS.
15. BULKHEAD @ 7'-0" A.F.F.
16. EMERGENCY DUAL HEAD FIXTURE. SEE ELECT. DWGS.
17. SECURITY STROBE LIGHT, REFER TO ELECT. DWGS.
18. FAN COIL.
19. AWNING FLUORESCENT LIGHTS.
20. 6" x 6" STAINLESS STEEL CHASE ALONG WALL FOR ICE MACHINE REFRIGERANT LINES: CEILING TO TOP OF ICE MACHINE.
21. DIMENSION STRING INDICATES PENDANTS OR DOWNLIGHTS CENTERED OVER TABLES.
22. INSULATED MULTIPLEX LINES - SEE SCOPE OF WORK.
23. DROPPED SOFFIT @ HIGH CHAIR RECESS.
24. EXIT SIGN.
25. CEILING CONTINUES OVER HOODS. WRAP TOP OF HOOD WITH ONE LAYER OF "FIRE-MASTER" DUCT WRAP. SEE DET. M15/ M4.0.

CITY OF SAN JOSE
BUILDING DIVISION
B.P. #_____
DATE_____

Vincent+Murphy Incorporated
637 Fifth Avenue
San Rafael, Ca. 94901
(415) 451-2500
FAX 451-2595

LICENSED ARCHITECT
HUGH EDWARD MURPHY
No. C17928
REN. 10/31/07
STATE OF CALIFORNIA

JOB NUMBER
H0510

SUBMITTALS	
03/24/06	BLD'G PC#1 SUBMITTAL

REVISIONS	
1 04 / 28 / 06	P.C. RESPONSE #1

CONTRACT DATE:
BUILDING TYPE: KA60-Y04
PLAN VERSION: JAN 05 D
SITE NUMBER:
STORE NUMBER:

KFC / A&W
3144 S. BASCOM AVENUE
SAN JOSE, CA. 95124-2022

KA60-Y04

REFLECTED CEILING PLAN

A7.1

W:\Data\barman\2005\H0510_san jose_bascom\03_cd_current\049_KA_Y04-A7_1.dwg modified by ohanrigan at Jun 26, 2006 - 3:44pm

FLOORS

SYM	DESCRIPTION	ALTERNATE/NOTES
T-1	MFR.: DAL-TILE TYPE: SURETREAD QUARRY COLOR: RFD SIZE: 6"x6" GROUT: MAPEI #47 CHARCOAL	
T-2	MFR.: DALTILE CONTINENTAL SLATE TYPE: PORCELAIN TILE COLOR: EGYPTION BEIGE CS50 SIZE: 12" x 12" GROUT: TEC #929 CHARCOAL	
T-3	MFR.: DALTILE CONTINENTAL SLATE TYPE: PORCELAIN TILE COLOR: ASIAN BLACK CS53 SIZE: 12" x 12" GROUT: TEC #929 CHARCOAL	
T-4	MFR.: DALTILE CONTINENTAL SLATE TYPE: PORCELAIN TILE COLOR: INDIAN RED CS51 SIZE: 12" x 12" GROUT: TEC #929 CHARCOAL	

WALL BASE

SYM	DESCRIPTION	ALTERNATE/NOTES
B-1	MFR.: DAL-TILE TYPE: SANITARY COVE COLOR: RED TO MATCH T-1 SIZE: 5"x6" GROUT: MAPEI #47 CHARCOAL	
B-2	MFR.: DALTILE PORCEALTO TYPE: COVE BASE #S3689T COLOR: NERO #CD11 SIZE: 6"x8" GROUT: TEC #929 CHARCOAL	

WALLS LAMINATES

SYM	DESCRIPTION	ALTERNATE/NOTES

DOORS

SYM	DESCRIPTION	ALTERNATE/NOTES
DL-1	MFR.: TYPE: LAMINATE COLOR: FORMICA #7012-58 AMBER MAPLE FRAMES: PAINTED P-5 (ALL FRAMES) FINISH: HIGH GLOSS	
DL-2	MFR.: BOBRICK TYPE: SOLID PHENOLIC COLOR: BLACK STAR, #P-500	

WALLS

SYM	DESCRIPTION	ALTERNATE/NOTES
P-1	MFR.: BENJAMIN MOORE TYPE: HC-86 COLOR: "KINGSPORT GRAY" (P-1) FINISH: REGAL AQUAVELVET (LATEX EGGSHELL) LOCATION: DINING ROOM	
P-2	MFR.: BENJAMIN MOORE TYPE: OC-96 COLOR: GENTLE CREAM FINISH: REGAL AQUAVELVET (LATEX EGGSHELL) LOCATION: DINING ROOM	
P-3	MFR.: BENJAMIN MOORE TYPE: 2124-10 COLOR: WROUGHT IRON FINISH: REGAL AQUAVELVET (LATEX EGGSHELL) LOCATION: OPEN CEILING (ALL ABOVE 11' 1-1/2")	
P-4	MFR.: BENJAMIN MOORE TYPE: HC-80 COLOR: BLEEKER BEIGE FINISH: REGAL AQUAVELVET (LATEX EGGSHELL) 1 LOCATION: HARD CEILING	
P-5	MFR.: BENJAMIN MOORE TYPE: HC-80 COLOR: BLEEKER BEIGE FINISH: ALKYD DULAMEL (ALKYD SEMI-GLOSS ENAMEL) LOCATION: DOOR FRAMES	
P-6	MFR.: BENJAMIN MOORE TYPE: EXT. RM COLOR: SAIL CLOTH FINISH: - LOCATION: UPPER WALLS LRV 72.9	
WC-1	MFR.: FORBO TYPE: MARMOLEUM, REAL COLOR: CARIBBEAN #3038 NOTE: WAINSCOTT TRIM: BRONZE	ANODIZED CORNER GUARDS AND J-MOLDS BY NATIONAL METAL SHAPES
FRP-1	MFR.: MARLITE TYPE: FIBERGLASS REINFORCED PANEL COLOR: FP-100 WHITE NOTE: NO COLOR VARIATIONS ACCEPTED	
FRP-2	MFR.: MARLITE TYPE: FIBERGLASS REINFORCED PANEL COLOR: FP-100 WHITE NOTE: NO COLOR VARIATIONS ACCEPTED TEXTURE: SMOOTH	LOCATION: KFC BREADING AREA ONLY
TM-1	MFR.: MILLWORK CONTRACTOR TYPE: CHAIR RAIL COLOR: NATURAL MAPLE NOTE: 1 X 2 SOLID MAPLE STAIN: NATURAL	
TM-2	MFR.: MILLWORK CONTRACTOR TYPE: TRIM COLOR: NATURAL MAPLE NOTE: 1X1 SOLID MAPLE TRIM STAIN: NATURAL	
TM-3	MFR.: MILLWORK CONTRACTOR TYPE: TRIM COLOR: BM#HC-86 "KINGSPORT GRAY" (P-1) NOTE: 1X2 WOOD TRIM	
TM-4	MFR.: MILLWORK CONTRACTOR TYPE: TRIM COLOR: BM#HC-80 "BLEEKER BEIGE" (P-4) NOTE: 1X2 WOOD TRIM	
WT-1	MFR.: DALTILE CONTINENTAL SLATE TYPE: CERAMIC TILE COLOR: #CS50 EGYPTION BEIGE 12" x 18" GROUT: TEC 929 CHARCOAL LOCATION: DINING ROOM	
WT-2	MFR.: DALTILE RITTENHOUSE SQUARE TYPE: GLAZED WALL TILE COLOR: #K185 ALMOND 3"X6" GROUT: HYDROMENT #158 CLASSIC BONE LOCATION: RESTROOMS	
WT-3	MFR.: DALTILE WALL TRIM TYPE: GLAZED BULLNOSE COLOR: #K111 BLACK 2"X6" GROUT: HYDROMENT #158 CLASSIC BONE LOCATION: RESTROOMS	
WT-4	MFR.: DALTILE KEYSTONES TYPE: 1"X2" DOT-MOUNTED MOSAIC TILE SHEET COLOR: KFC CUSTOM GROUT: HYDROMENT #158 CLASSIC BONE LOCATION: RESTROOMS	
WT-5	MFR.: DALTILE KEYSTONES TYPE: 1"X2" DOT-MOUNTED MOSAIC TILE SHEET COLOR: A&W CUSTOM GROUT: HYDROMENT #158 CLASSIC BONE LOCATION: RESTROOMS	
S-1	MFR.: GIBRALTAR BY WILSONART TYPE: SOLID SURFACE MATERIAL COLOR: BAJA MELANGE #9030-ML	

CEILINGS

SYM	DESCRIPTION	ALTERNATE/NOTES
CL-1	MFR.: ACOUSTIFLEX CORP. TYPE: CARAUL VINYL ROCK, #1140 WASHABLE NON-PERFORATED, 24"x48"x1/2" COLOR: WHITE GRID: ALUMINUM WHITE SUSPENSION GRID NOTE: FLAME SPREAD RATING 0-25, CLASS A	MFR.: US GYPSUM CO. TYPE: PANEL #3270-2-MII COLOR: WHITE VINYL NOTE: FIRE CODE C NOTE: SHI SPECIFICATIONS
CL-3	MFR.: TYPE: GYPSUM BOARD COLOR: REFER TO RCP / A7.1	
P-6	MFR.: BENJAMIN MOORE TYPE: EXT. RM COLOR: SAIL CLOTH FINISH: ALKYD DULAMEL (ALKYD SEMI-GLOSS ENAMEL) LOCATION: UPPER WALLS LRV 72.9	1

MILLWORK

SYM	DESCRIPTION	ALTERNATE/NOTES
PL-1	MFR.: FORMICA TYPE: LAMINATE COLOR: FORMICA #7284-58 FIGURED ANNIGRE	

1. INSTALL FRP ON KITCHEN SIDE OF SERVING COUNTER WALL.
2. GALV STEEL WALL AND CEILING FINISHES BY WIC / WIF BOX MFR.
3. REFER TO INTERIOR ELEVATIONS FOR LOCATIONS OF TILE AND FRP.
4. FOR FINISH LOCATIONS REFER TO:
   SHEETS A4.0 & A4.1 - EXTERIOR ELEVATIONS
   SHEET A7.0 - FLOOR FINISH PLAN
   SHEET A7.1 - REFLECTED CEILING PLAN
   SHEETS A8.0 TO A8.3 - INTERIOR ELEVATIONS
5. APPROVED PAINT MANUFACTURERS:
   PORTER, BENJAMIN MOORE, SHERWIN WILLIAMS, ICI, & PITTSBURGH PAINTS.
   MATCH SPECIFIED SCHEDULE COLORS EXACTLY.
6. WT-4 & WT-5 12" X 24" SHEETS SHALL BE CUT IN HALF, LENGTHWISE TO CREATE (2) 6" X 24" PIECES. TILE TO BE INSTALLED W/ PATTERN MATCHING AT SIDES.

ROOM FINISH NOTES D

DALTILE
LESLIE S. LIKINS
502-637-2750
LESLIE.LIKINS@DALTILE.COM

MAPEI
JUNE SEARS
800-688-3996
PAGER 586 450-7005

MARLITE
DAN EGBERS
330-343-6621
WWW.MARLITE.COM

HYDROMENT
JEANNE ATKINSON
248-478-3958
CELL 810-459-1009

WILSONART INTERNATIONAL, INC.
KEVIN GEUER
254-207-2071

NATIONAL METAL SHAPES
RUSSEL DAY
800-837-9559

SHERWIN WILLIAMS
BELINDA SIPOS
317-594-0083

FORBO
DONNA YOUNG-KERN
800-342-0604 EXT. 441
FAX: 1-614-734-1994
DYOUNG@FL-NA.COM

CONTACTS C

ROOM FINISH SCHEDULE LEGEND A

CITY OF SAN JOSE
BUILDING DIVISION
B.P. #
DATE

Vincent+Murphy
Incorporated

637 Fifth Avenue
San Rafael, Ca. 94901
(415) 451-2500
FAX 451-2595

LICENSED ARCHITECT
HUGH EDWARD MURPHY
No. C17926
EXP. 10/31/07
STATE OF CALIFORNIA

JOB NUMBER
H0510

SUBMITTALS

03/24/06	BLDG PC#1 SUBMITTAL

REVISIONS

1 04/28/06	P.C. RESPONSE #1

CONTRACT DATE:
BUILDING TYPE: KA60-Y04
PLAN VERSION: JAN 05 D
SITE NUMBER:
STORE NUMBER:

KFC / A&W

3144 S. BASCOM AVENUE
SAN JOSE, CA. 95124-2022

KA60-Y04

FINISH SCHEDULE

A7.2

W:\Data\kormech\2005\H0510_san jose_bascom\03_cd_current\050_KA_Y04-A7_2.dwg modified by Dhamigan at Jun 28, 2006 - 3:44pm

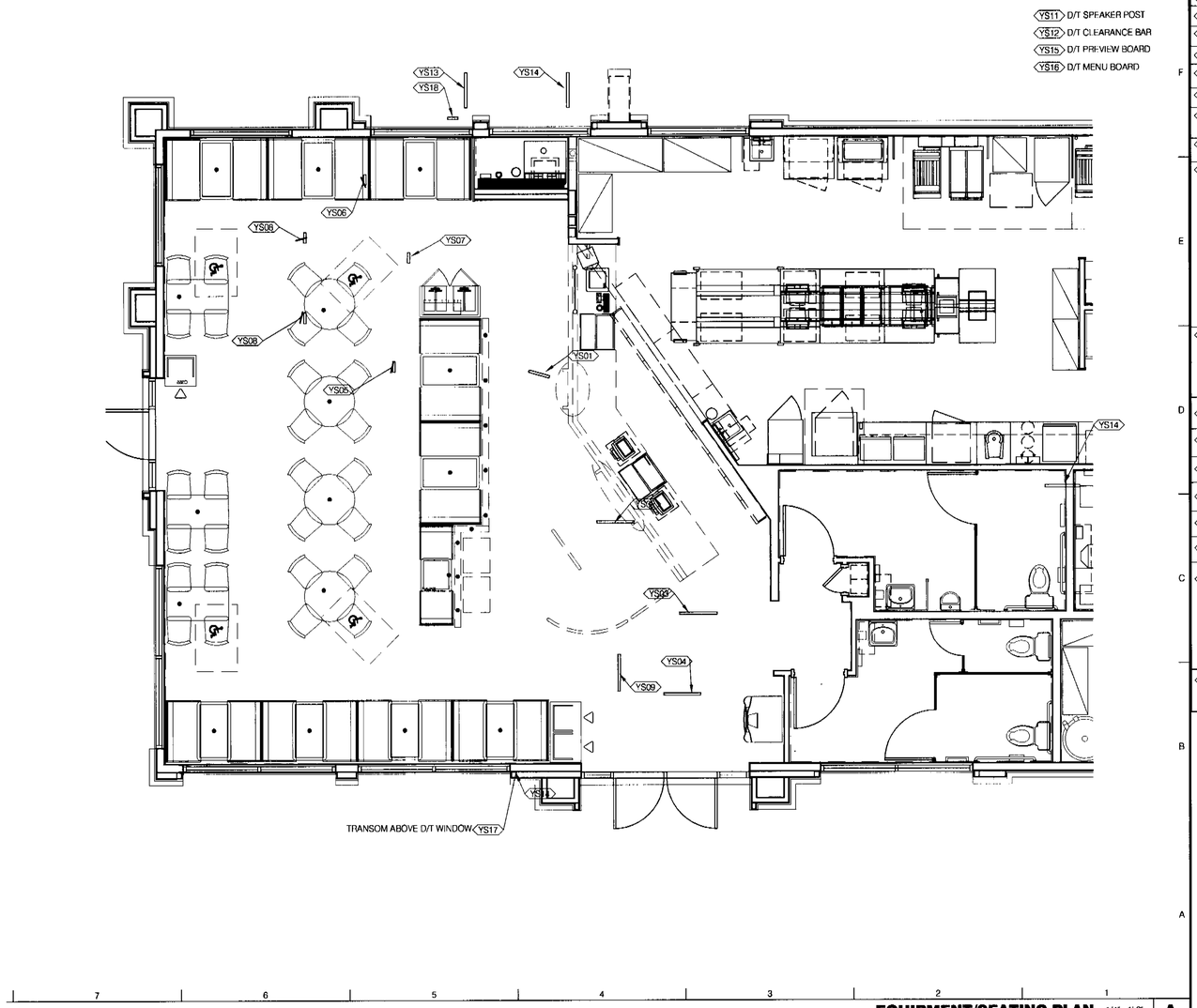

EQUIPMENT/SEATING PLAN 1/4"=1'-0" **A**

	SYM.	MZ Item #	Description	Copy	Trim Size	Image Area	Material / Stock	Finishing	Installation	Location	Qty
	YS01	G1	Hanging Oval	order here	20" X 12 1/2"	20" X 12 1/2"	1/2" WBW Ultraboard	Die Cut with Drilled Holes	Hung from ceiling	above front counter - registers @ 113" A.F.F.	1
	YS02	G1	Hanging Oval	pick-up	20" X 12 1/2"	20" X 12 1/2"	1/2" WBW Ultraboard	Die Cut with Drilled Holes	Hung from ceiling	above front counter - food landing @ 103" A.F.F.	1
	YS03	G1	Hanging Oval	fixins	20" X 12 1/2"	20" X 12 1/2"	1/2" WBW Ultraboard	Die Cut with Drilled Holes	Hung from ceiling	above condiment counter @ 103" A.F.F.	1
	YS04	G1	Hanging Oval	thirsty ?	20" X 12 1/2"	20" X 12 1/2"	1/2" WBW Ultraboard	Die Cut with Drilled Holes	Hung from ceiling	above self-serve drink station @ 103" A.F.F.	1
F	YS05	G2	Wall Oval - Small	boy's room	10" X 6 1/4"	10" X 6 1/4"	80 Mil Co-ex styrene	Die cut, 2 dft strips on back, plastic braille decals w/DFT on back	Stuck to wall	beside men's room door @ 60" A.F.F.	1
	YS06	G2	Wall Oval - Small	girls room	10" X 6 1/4"	10" X 6 1/4"	80 Mil Co-ex styrene	Die cut, 2 dft strips on back, plastic braille decals w/DFT on back	Stuck to wall	beside women's room door @ 60" A.F.F.	1
	YS07	G3	Wall Oval - Medium	restrooms	15" X 9 3/8"	15" X 9 3/8"	80 Mil Co-ex styrene	Die cut, 2 dft strips on back	Stuck to wall	face of wall above opng. leading to restrooms @ 92" A.F.F.	1
	YS08	G3	Wall Oval - Medium	don't forget the soap	15" X 9 3/8"	15" X 9 3/8"	80 Mil Co-ex styrene	Die cut, 2 dft strips on back	Stuck to wall	inside restroom, next to restroom sink @ 50" A.F.F.	2
	YS09	G4 a	Beverage & Condiment Ovals	small lids	3" X 1.85"	3" X 1.85"	80 Mil Co-ex styrene	Die cut, 1 dft strips on back	Stuck to furniture or fixture	drink station - mounting hgt. TBD	1
		G4 b	Beverage & Condiment Ovals	medium lids	3" X 1.85"	3" X 1.85"	80 Mil Co-ex styrene	Die cut, 1 dft strips on back	Stuck to furniture or fixture	drink station - mounting hgt. TBD	1
		G4 c	Beverage & Condiment Ovals	large lids	3" X 1.85"	3" X 1.85"	80 Mil Co-ex styrene	Die cut, 1 dft strips on back	Stuck to furniture or fixture	drink station - mounting hgt. TBD	1
E		G4 d	Beverage & Condiment Ovals	lemon juice	3" X 1.85"	3" X 1.85"	80 Mil Co-ex styrene	Die cut, 1 dft strips on back	Stuck to furniture or fixture	drink station - mounting hgt. TBD	1
		G4 e	Beverage & Condiment Ovals	sugar	3" X 1.85"	3" X 1.85"	80 Mil Co-ex styrene	Die cut, 1 dft strips on back	Stuck to furniture or fixture	drink station - mounting hgt. TBD	1
		G4 f	Beverage & Condiment Ovals	sweetener	3" X 1.85"	3" X 1.85"	80 Mil Co-ex styrene	Die cut, 1 dft strips on back	Stuck to furniture or fixture	drink station - mounting hgt. TBD	1
		G4 n	Beverage & Condiment Ovals	straws	3" X 1.85"	3" X 1.85"	80 Mil Co-ex styrene	Die cut, 1 dft strips on back	Stuck to furniture or fixture	drink station - mounting hgt. TBD	1
	YS11	G5	Exterior Oval - Small	our hours...	10" X 6 1/4"	10" X 6 1/4"	PS pre-masked ext. grade vinyl w/UV	metal routed, powder coated ovals, vhb tape - 4 color process	Stuck to D/T speaker box	drive thru speaker box	1
		G5	Exterior Oval - Small	we accept... (credit cards)	10" X 6 1/4"	10" X 6 1/4"	PS pre-masked ext. grade vinyl w/UV	metal routed, powder coated ovals, vhb tape - 4 color process	Stuck to D/T speaker box	drive thru speaker box	1
		G5	Exterior Oval - Small	order here	10" X 6 1/4"	10" X 6 1/4"	PS pre-masked ext. grade vinyl w/UV	metal routed, powder coated ovals, vhb tape - 4 color process	Stuck to D/T speaker box	drive thru speaker box	1
D	YS12	SK-B2-01-11	"Watch Your Head" Oval Sign	watch your head	20" X 13"	20" X 13"	12GA Stainless Steel or Aluminum	Obrion Black mini-tex, factory welded bracket w 2 holes for #12 SMPH screws	Attached to top of clearance bar	drive thru clearance bar - TBD	1
	YS13	G18V	Come in - locals	come in	26" X 8"	26" X 8"	PS 4 Mil Vinyl		Applied to entrance door, facing out	lobby door - above handle	2
	YS14	G26V	Thanks decal	thanks !	26" X 8"	26" X 8"	PS 4 Mil Vinyl		Applied to entrance door, facing in	lobby door - above handle	2
	YS15	G38V	Menu Shroud Decal	please order at next menu	36" X 12"	36" X 12"	PS 4 Mil Vinyl		Applied to base of drive thru preview board	drive thru preview board by Menu Board Vendor - mounting height - TBD	1
	YS16	G48V	Menu Shroud Decal	so much to chews from	36" X 12"	36" X 12"	PS 4 Mil Vinyl		Applied to base of drive thru menu board	drive thru menu board by Menu Board Vendor - mounting height - TBD	1
	YS17	G59V	Drive Thru Window Decal	enjoy ! And drive safely	36" X 10 1/2"	36" X 10 1/2"	PS 4 Mil Vinyl		Applied to glass above drive-thru window	drive thru window #2	1
C	YS18	G27	Door Oval Decals	our hours...	10" X 6 1/4"	10" X 6 1/4"	PS exterior grade vinyl w/uv coating		Applied to window beside door - in and out	Sign on sticker - mount on window beside lobby door @ 53"A.F.F.	4
		G27	Door Oval Decals	we accept... (credit cards)	10" X 6 1/4"	10" X 6 1/4"	PS exterior grade vinyl w/uv coating		Applied to window beside door - in and out	Sign on sticker - mount on window beside lobby door @ 46"A.F.F.	4
		G27	Door Oval Decals	smoke free, (accessible)	10" X 6 1/4"	10" X 6 1/4"	PS exterior grade vinyl w/uv coating		Applied to window beside door - in and out	Sign on sticker - mount on window beside lobby door @ 60"A.F.F.	4
	YS19	—	Oval Plaque	LONG JOHN SILVER'S Captain's Bell If we did well... Ring the bell	15" X 9 3/8"	15" X 9 3/8"	80 Mil Co-ex styrene		Screwed to wall	Beside side door- center bell bracket @ 5'-0" A.F.F.	1

B

A

NOT USED **F**

NOT USED **E**

1. CONTRACTOR SHALL INSTALL ALL YUM SPEAK U.O.N.
2. *INDICATES ITEMS THAT ARE TO BE INSTALLED BY STORE MANAGER.
3. FOR ADDITIONAL EXTERIOR YUM SPEAK SEE SCHEDULE.
4. FOR MOUNTING HEIGHTS, LOCATIONS AND INSTALLATION DETAILS, SEE YUM SPEAK DOCUMENTATION PROVIDED W/ PACKAGE.

GENERAL NOTES **C**

CITY OF SAN JOSE
BUILDING DIVISION
B.P. #
DATE

YUM SPEAK SCHEDULE **B**

Vincent+Murphy
Incorporated

637 Fifth Avenue
San Rafael, Ca. 94901
(415) 451-2500
FAX 451-2595

LICENSED ARCHITECT
HUGH EDWARD MURPHY
No. C17928
REN. 10/31/07
STATE OF CALIFORNIA

JOB NUMBER
H0510

SUBMITTALS

03/24/06	BLD'G PC#1 SUBMITTAL

REVISIONS

CONTRACT DATE:
BUILDING TYPE: KA60-Y04
PLAN VERSION: JAN 05 D
SITE NUMBER:
STORE NUMBER:

KFC / A&W

3144 S. BASCOM AVENUE
SAN JOSE, CA. 95124-2027

KA60-Y04
YUM SPEAK

A7.3

W:\Data\yarman\2005\M0510_san jose_bascom\03_cd_current\051_KA_Y04-A7_3.dwg modified by Dhanajgon at Jun 26, 2006 - 3:45pm

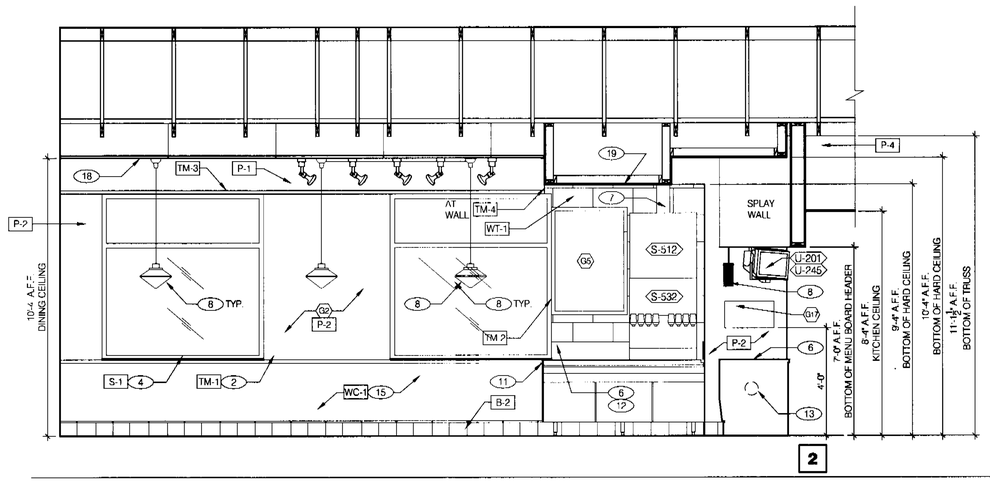

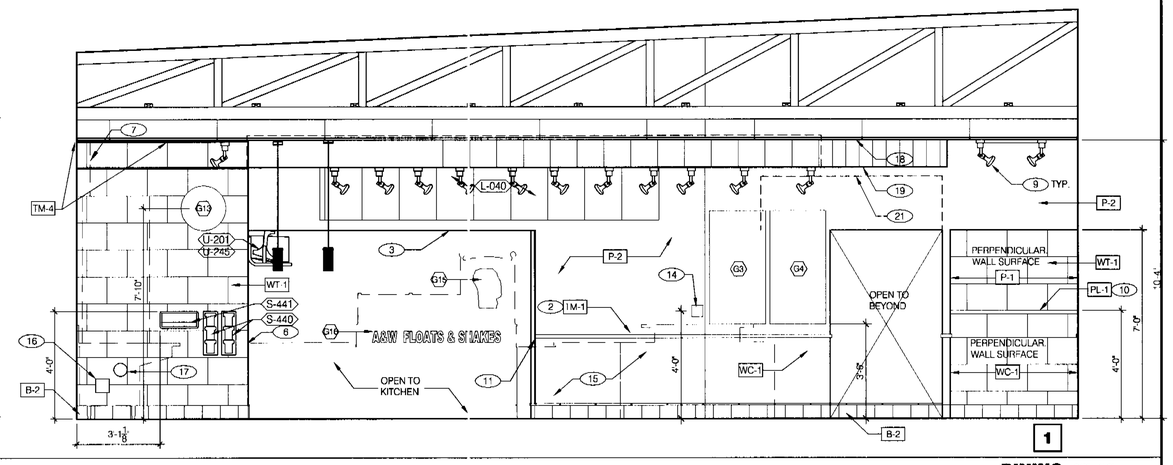

DINING 3/8" = 1'-0"

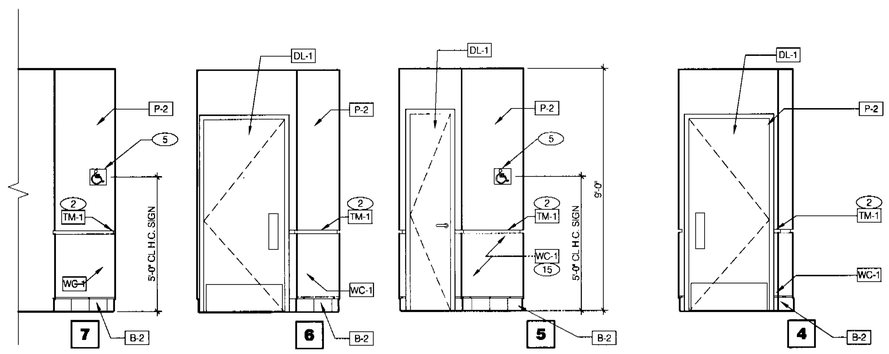

PASSAGE 3/8" = 1'-0"

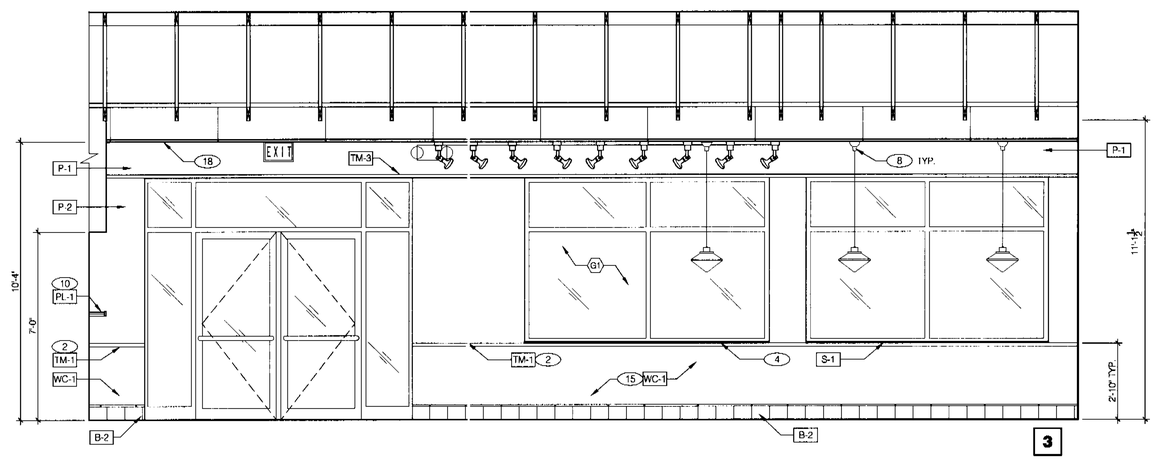

DINING 3/8" = 1'-0"

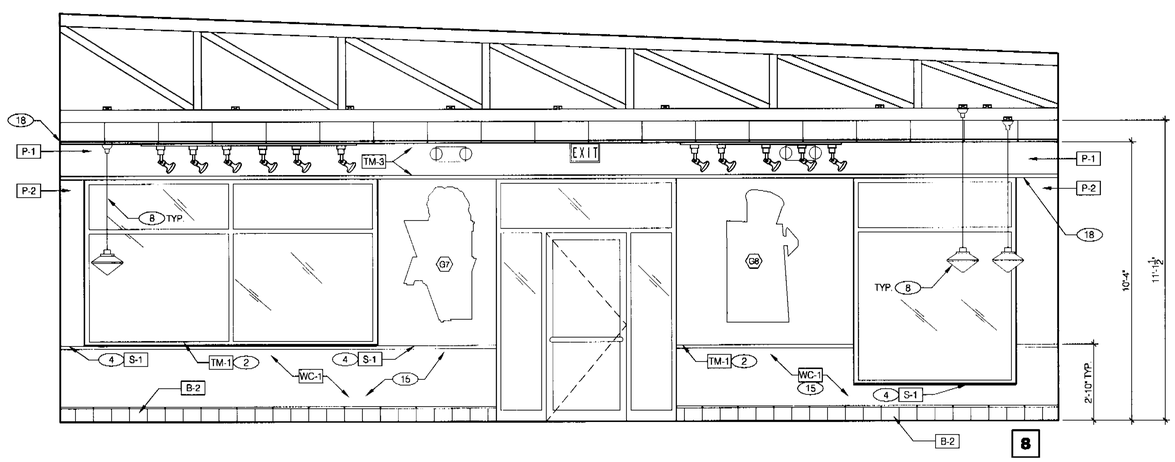

DINING 3/8" = 1'-0"

1. NOT USED.
2. CHAIR RAIL. REFER TO DETAIL 1/A8.5.
3. MENU BOARD BULKHEAD.
4. WINDOW SILL.
5. H.C. SIGNAGE
6. PROVIDE CLEAR SILICONE CAULK WHERE ALL FIXED AND BUILT-IN COUNTERS / EQUIPMENT ABUT WALL SURFACES. WHERE GAP BETWEEN WALL AND COUNTER SPLASH / EQUIPMENT EXCEEDS 1/4". PROVIDE S.S. CLOSURE / ANGLE.
7. 18 GAUGE STAINLESS STEEL CHASE.
8. DROP PENDANT LIGHT FIXTURE. SEE SCOPE OF WORK AND SHEET E4.0.
9. TRACK MOUNTED LIGHT FIXTURE. SEE SCOPE OF WORK AND SHEET E4.0.
10. BOOSTER CHAIR COUNTER. SEE SECTION 2/A6.5.
11. START CHAIR RAIL. SEE HT. A1.0 FOR DIMENSIONS.
12. OMIT CHAIR RAIL BEHIND DRINK STATION.
13. 6" DIA. PVC CHASE OPENING THRU SERVICE COUNTER. SEE 20/A6.4 AND SHEET A1.0.
14. SECURITY SYSTEM KEYPAD. SEE E5.0
15. REFER TO 13/A6.5 FOR WAINSCOT INSTALLATION.
16. 6"x6" OPENING FINISHED WITH FRP FOR SYRUP TUBES. SEE 19/A6.4 AND SHEET A1.0.
17. 6" DIA. PVC CHASE OPENING THRU WALL TO SS DRINK MACHINE. SEE 20/A6.4 AND SHEET A1.0.
18. SUSPENDED ACOUSTICAL TILE CEILING
19. GYPSUM BOARD SOFFIT
20. SUSPEND GYPSUM BOARD CEILING BEYOND
21. BATHROOM VESTIBULE CEILING (BEYOND)

KEY NOTES A

CITY OF SAN JOSE
BUILDING DIVISION
B.P. #
DATE:

Vincent+Murphy
Incorporated

637 Fifth Avenue
San Rafael, Ca. 94901
(415) 451-2500
FAX 451-2595

LICENSED ARCHITECT
HUGH EDWARD MURPHY
No. C17828
EXP. 10/31/07
STATE OF CALIFORNIA

JOB NUMBER
H0510

SUBMITTALS

03/24/06	BLDG PC#1 SUBMITTAL

REVISIONS

CONTRACT DATE:
BUILDING TYPE: KA60-Y04
PLAN VERSION: JAN 05 D
SITE NUMBER:
STORE NUMBER:

KFC / A&W

3144 S. BASCOM AVENUE
SAN JOSE, CA. 95124-2022

KA60-Y04

INTERIOR ELEVATIONS DINING ROOM

A8.0

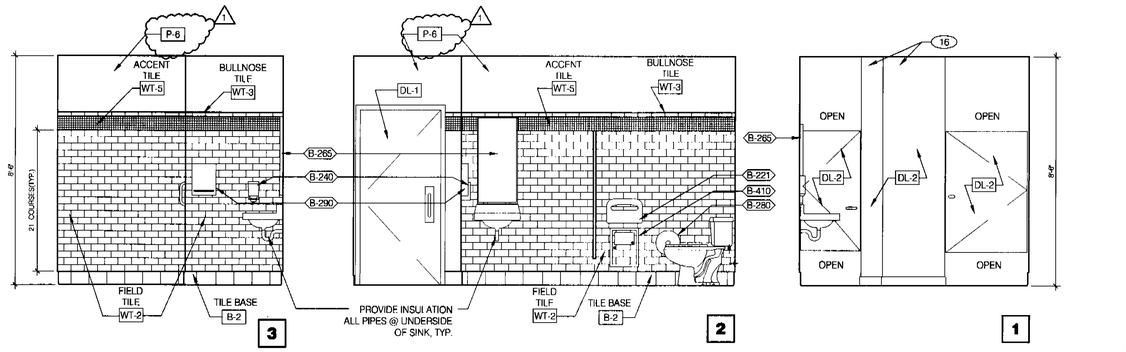

WOMEN'S RESTROOM 3/8"=1'-0"

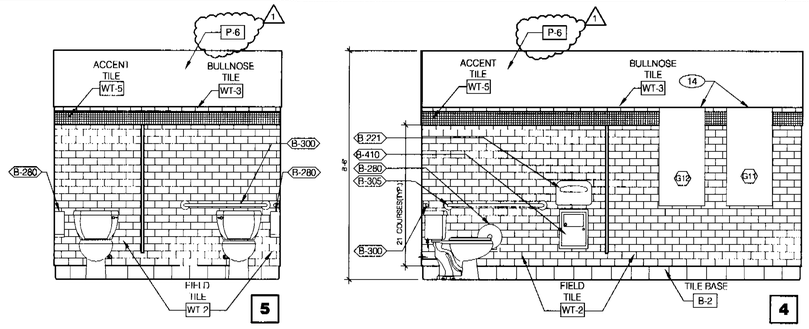

WOMEN'S RESTROOM 3/8"=1'-0"

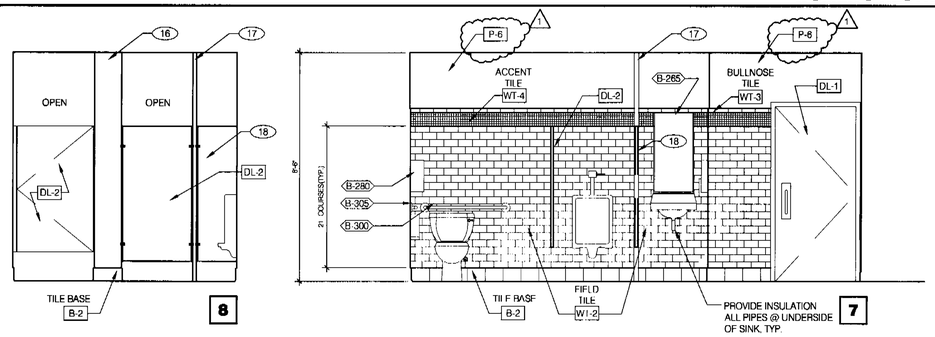

MEN'S RESTROOM 3/8"=1'-0"

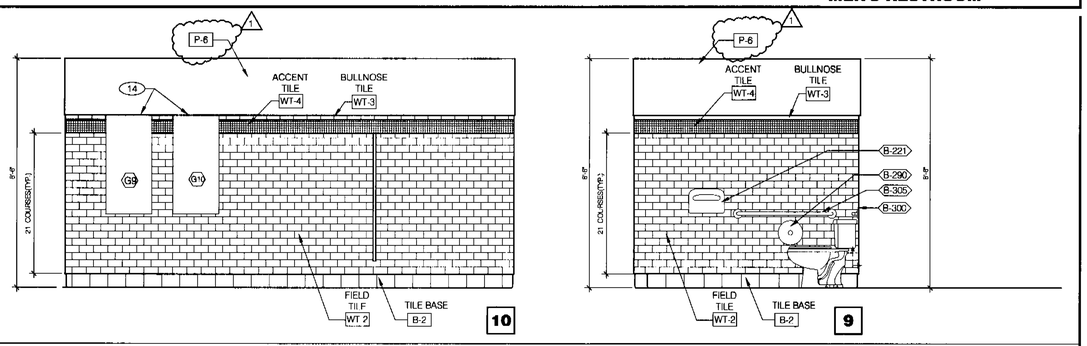

MEN'S RESTROOM 3/8"=1'-0"

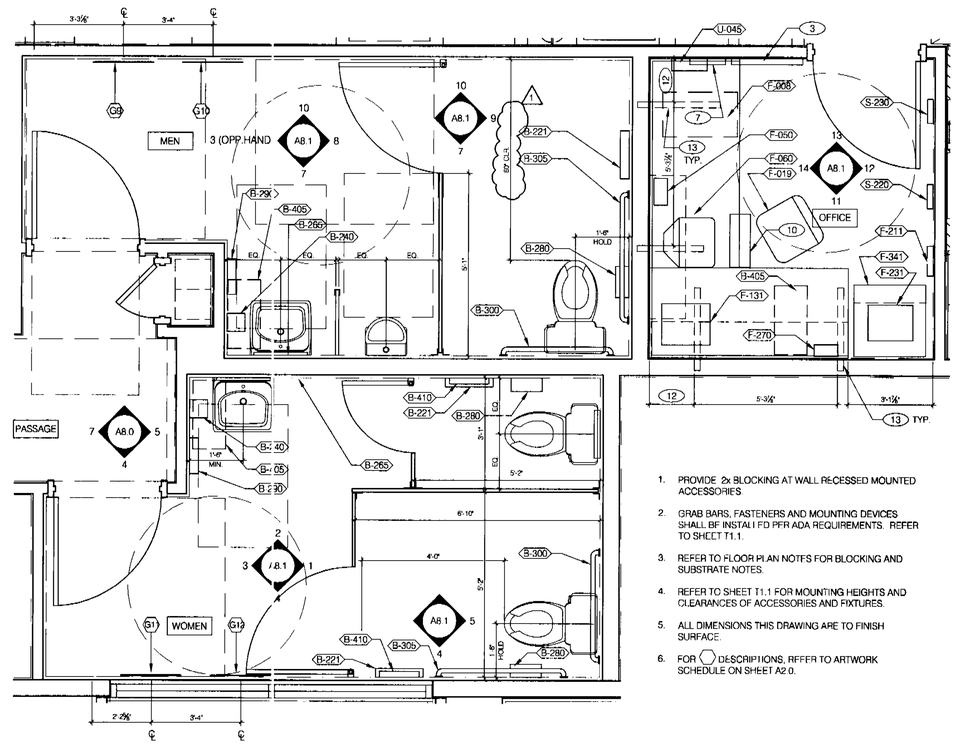

1. PROVIDE 2x BLOCKING AT WALL RECESSED MOUNTED ACCESSORIES
2. GRAB BARS, FASTENERS AND MOUNTING DEVICES SHALL BE INSTALLED PER ADA REQUIREMENTS. REFER TO SHEET T1.1.
3. REFER TO FLOOR PLAN NOTES FOR BLOCKING AND SUBSTRATE NOTES.
4. REFER TO SHEET T1.1 FOR MOUNTING HEIGHTS AND CLEARANCES OF ACCESSORIES AND FIXTURES.
5. ALL DIMENSIONS THIS DRAWING ARE TO FINISH SURFACE.
6. FOR ⬡ DESCRIPTIONS, REFER TO ARTWORK SCHEDULE ON SHEET A2.0.

ENLARGED RESTROOM/OFFICE PLAN / GENERAL NOTES 1/2"=1'-0" **A**

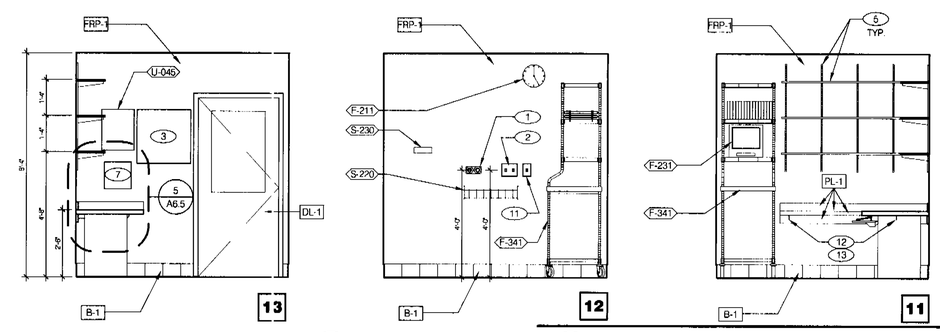

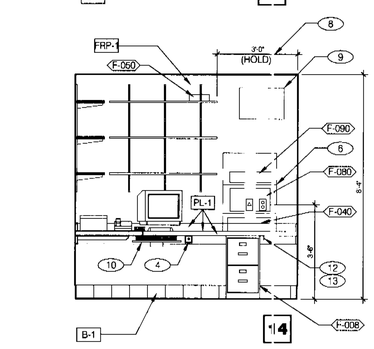

OFFICE ELEVATIONS / KEY NOTES 3/8"=1'-0" **C**

1. THERMOSTATS
2. LIGHTING CONTROL RELAY SWITCHES. SEE DETAIL 14 & 18/E6.0
3. TELEPHONE TERMINAL BOARD
4. HOLD UP BUTTON
5. 12" DEEP MELAMINE SHELVING SECURED TO 11.5" HEAVY DUTY DUAL TRACK BRACKETS PER MFR.'S SPECIFICATIONS. MOUNTED ON HEAVY DUTY DUAL TRACK WALL STANDARDS @ 16" O.C. SECURED TO WALL AT STUD LOCATIONS PER MFR'S SPECIFICATIONS.
6. EQUIPMENT BY POS PROVIDER SHOWN FOR REFERENCE. SEE SCOPE OF WORK.
7. 12" X 12" PHONE DISTRIBUTION BOX. OWNER PROVIDED & INSTALLED.
8. POS AREA ONLY. KEEP CLEAR OF ALL ITEMS OTHER THAN POS.
9. WIRING CABINET.
10. UNDER COUNTER KEYBOARD TRAY.
11. OVERRIDE SWITCH FOR BUILDING SIGNAGE.
12. BRACKET ATTACHED TO STUD PER DETAIL 5/A6.5. SHALL BE A MAXIMUM OF 18" FROM END OF COUNTERTOP.
13. ANGLE BRACKETS PER DETAIL 5/A6.5 (TYP. OF 4).
14. ALIGN TOP OF GRAPHIC W/ TOP OF BULLNOSE TILE.
15. ANGLE BRACKETS PER DETAIL 2/A6.5 (TYP. OF 2)
16. FLOOR TO CEILING PILASTER
17. FLOOR TO CEILING 1-½" SQUARE POST
18. URINAL SCREEN

CITY OF SAN JOSE
BUILDING DIVISION
B.P. #
DATE

KEY NOTES N.T.S. **B**

Vincent+Murphy Incorporated

637 Fifth Avenue
San Rafael, Ca. 94901
(415) 451-2500
FAX 451-2595

LICENSED ARCHITECT HUGH EDWARD MURPHY No. C17928 EXP. 10/31/07 STATE OF CALIFORNIA

JOB NUMBER
H0510

SUBMITTALS

03/24/06	BLDG PC#1 SUBMITTAL

REVISIONS

1	04/28/06	P.C. RESPONSE #1

CONTRACT DATE:
BUILDING TYPE: KA60-Y04
PLAN VERSION: JAN 05 D
SITE NUMBER:
STORE NUMBER:

KFC / A&W

3144 S. BASCOM AVENUE
SAN JOSE, CA. 95124-2022

KA60-Y04

INTERIOR ELEV. ENLARGED RESTROOMS & OFFICE PLAN

A8.1

W:\Data\harmon\2005\H0510_san jose_bascom\03_cd_current\054_KA_Y04-A8_1.dwg modified by tharrington at Jun 26, 2006 - 3:45pm

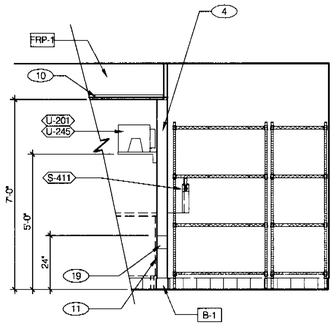

DRIVE-THRU 3/8" = 1'-0"

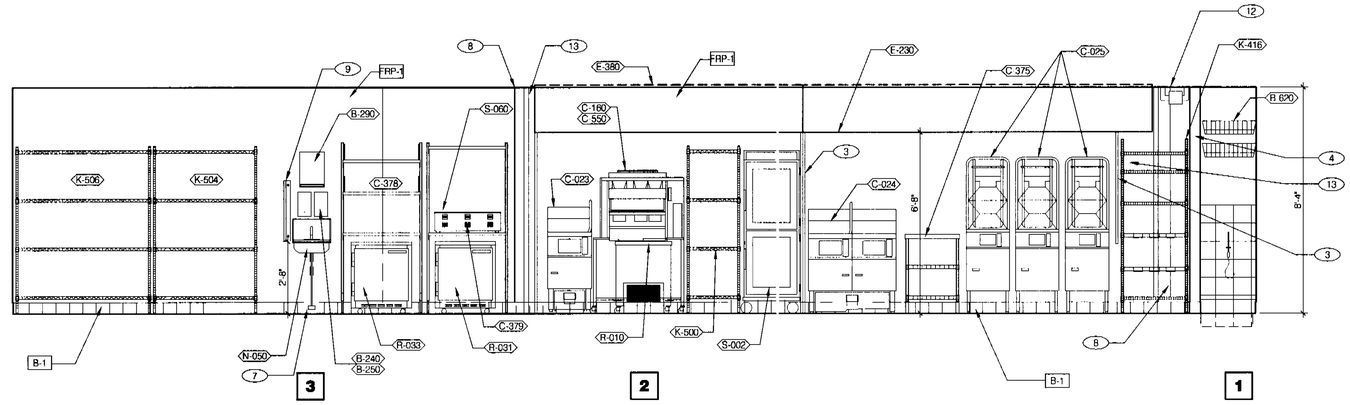

KFC / A&W 3/8" = 1'-0"

KFC COOK 3/8"=1'-0"

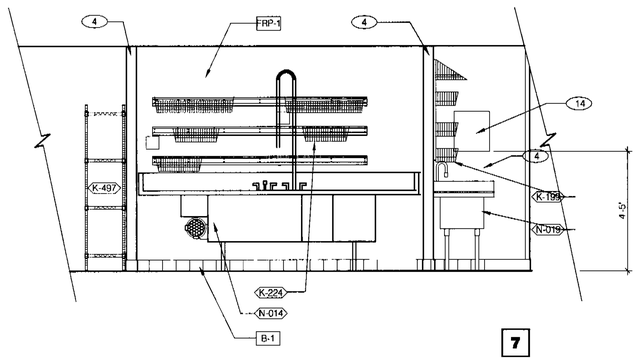

PREP / WARE WASHING 3/8" = 1'-0"

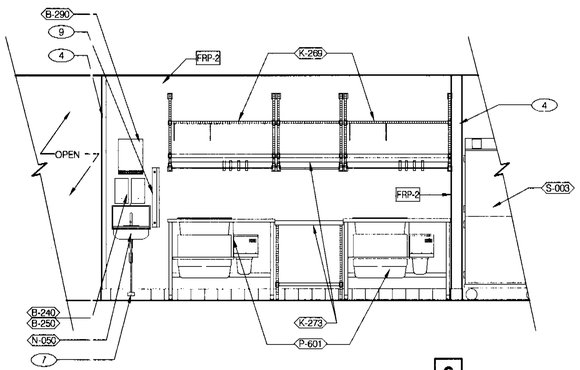

KFC COOK 3/8" = 1'-0"

DRIVE-THRU 3/8"=1'-0"

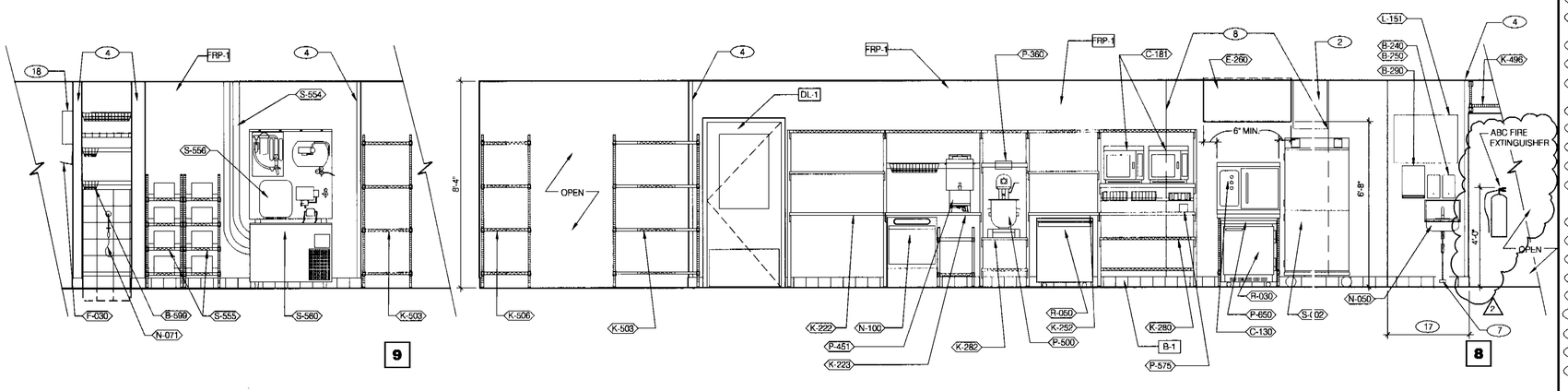

KITCHEN / PREP 3/8"=1'-0"

1. 6" STAINLESS STEEL CHASE FOR ICE MACHINE REFRIGERANT LINES.
2. ANSUL CABINET.
3. 22 GA SS NON-INSULATED SIDE PANEL TO UNDERSIDE OF HOOD (SUPPLIED WITH HOOD).
4. SS CORNER / END WALL CHANNEL GUARD, FULL HEIGHT. SEE 19/A8.5.
5. HOLD-UP BUTTON.
6. SS CORNER GUARDS AT PERIMETER OF D/T WINDOW. SEE 14 & 15/A8.1 AND SCOPE OF WORK FOR RESPONSIBILITIES.
7. HAND SINK FOOT PEDAL. SEE 7/P6.0.
8. EDGE OF SS PANEL BEHIND HOOD.
9. SS SPLASH GUARD. SEE DETAIL 9/A8.5.
10. FRP AT BOTTOM OF MENUBOARD BULKHEAD.
11. PROVIDE CLEAR SILICONE CAULK WHERE ALL FIXED AND BUILT-IN COUNTERS / EQUIPMENT ABUT WALL SURFACES. WHERE GAP BETWEEN WALL AND COUNTER SPLASH / EQUIPMENT EXCEEDS 1/4". PROVIDE S.S. CLOSURE ANGLE.
12. GAS SHUT-OFF VALVE.
13. GAS RISER.
14. WALL-MOUNTED SAUCE DISPENSER BRACKET.
15. 6" x 6" OPENING FINISHED WITH FRP FOR SYRUP TUBES. SEE 19/A6.4.
16. 4" DIA PVC SLEEVE FOR SYRUP TUBES. SEE 19/A6.4.
17. WALL SHOWN PARALLEL TO VIEW FOR CLARITY.
18. LIGHTING CONTROL "WATTSTOPPER" PANEL.
19. 6" DIA PVC SLEEVE FOR SYRUP TUBES. SEE 20/A6.4.
20. 7 1/2" x 7 1/2" 18 GA SS SHROUD FROM CEILING TO TABLE TOP FOR SYRUP BUNDLE, SCREWED TO WALL.

KEY NOTES A

Vincent+Murphy Incorporated

637 Fifth Avenue
San Rafael, Ca. 94901
(415) 451-2500
FAX 451-2595

LICENSED ARCHITECT — THOMAS EDWARD MURPHY — No. C17928 — EXP. 10/31/07 — STATE OF CALIFORNIA

JOB NUMBER
F10510

SUBMITTALS

03/24/06	BLD'G PC#1 SUBMITTAL

REVISIONS

2	05/26/06	P.C. RESPONSE #2

CONTRACT DATE:
BUILDING TYPE: KA60-Y04
PLAN VERSION: JAN 05 D
SITE NUMBER:
STORE NUMBER:

KFC / A&W

3144 S. BASCOM AVENUE
SAN JOSE, CA. 95124-2022

KA60-Y04

CITY OF SAN JOSE BUILDING DIVISION

INTERIOR ELEVATIONS KITCHEN

A8.2

W:\Data\harman\2005\H510_san jose_bascom\03_cd_current\054_KA_Y04-A8_2.dwg modified by Dharnigan at Jun 26, 2006 - 3:45pm

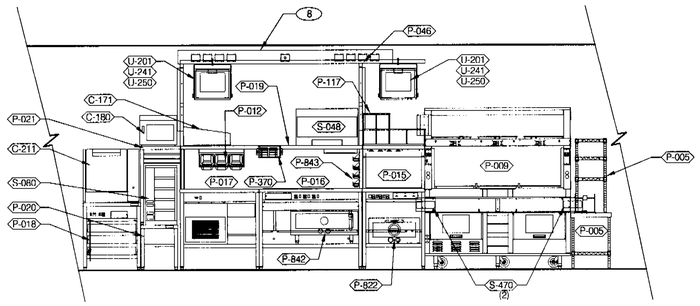

2

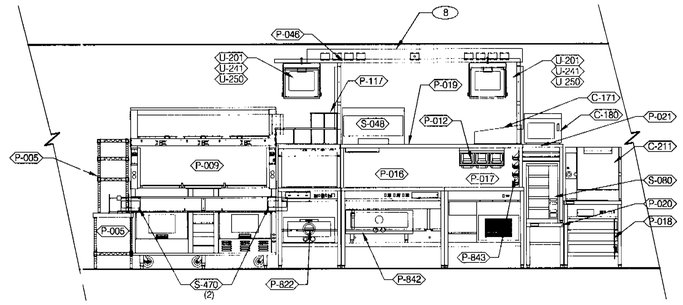

1

M.A.P.S. LINE 3/8"=1'-0"

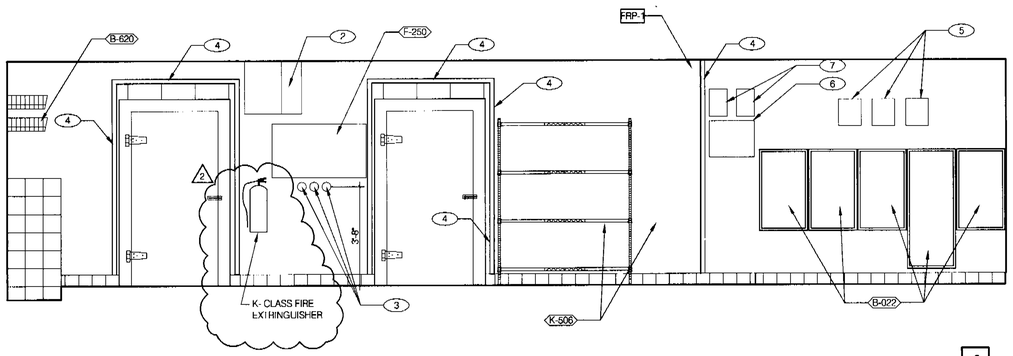

4

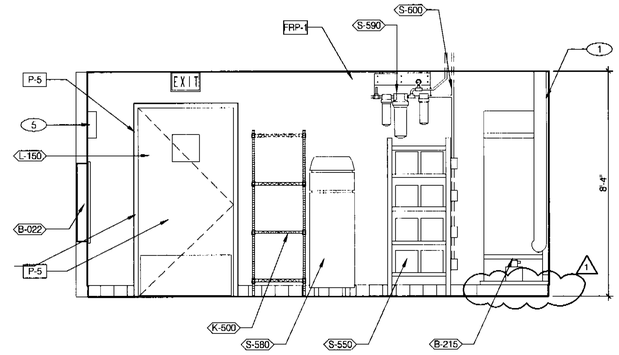

3

KITCHEN 3/8" = 1'-0"

UTILITY 3/8"=1'-0"

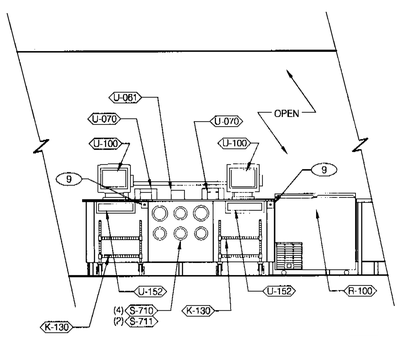

7

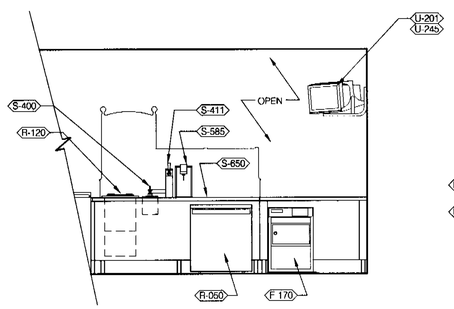

6

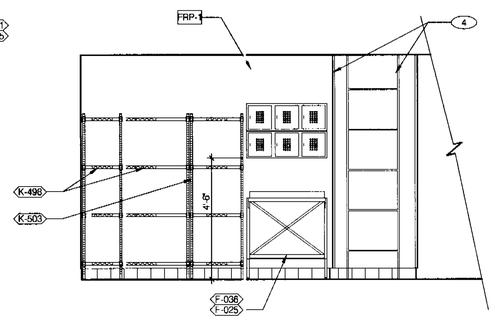

5

SERVING 3/8" = 1'-0"

UTILITY 3/8"=1'-0"

1. WATER HEATER INTAKE & VENT THROUGH SIDE WALL. SEE PLUMB DWGS.
2. ANSUL CABINET.
3. ANSUL PULL STATIONS.
4. SS CORNER / END WALL CHANNEL GUARD, FULL HEIGHT. SEE 19/A6.5.
5. FAN MOTOR STARTERS, SURFACE MOUNTED. TYP. OF 3.
6. LIGHTING CONTROL "WATTSTOPPER" PANEL.
7. LIGHTING CONTROL RELAYS (CONTACTORS).
8. UPPER WIRING CHASE.
9. HOLD-UP BUTTON.
10. 6" CONCRETE BASE FOR WATER HEATER. 1

CITY OF SAN JOSE
BUILDING DIVISION
B.P. #_____
DATE _____

KEY NOTES A

Vincent+Murphy
Incorporated

637 Fifth Avenue
San Rafael, Ca. 94901
(415) 451-2500
FAX 451-2595

LICENSED ARCHITECT
HUGH EDWARD MURPHY
No. C17928
EXP. 10/31/07
STATE OF CALIFORNIA

JOB NUMBER
H0510

SUBMITTALS

03/24/06	BLDG PC#1 SUBMITTAL

REVISIONS

1	04/28/06	P.C. RESPONSE #1
2	05/26/06	P.C. RESPONSE #2

CONTRACT DATE:
BUILDING TYPE: KA60-Y04
PLAN VERSION: JAN 06 D
SITE NUMBER:
STORE NUMBER:

KFC / A&W

3144 S. BASCOM AVENUE
SAN JOSE, CA. 95124-2022

KA60-Y04

INTERIOR ELEVATIONS KITCHEN

A8.3

W:\Data\harmon\2005\H0510_san jose_bascom\03_cd_current\055_KA_Y04-A6_3.dwg modified by Dhonnigan at Jun 26, 2006 - 3:45pm

GEMINI AIR SYSTEMS

1742 SABRE STREET · HAYWARD, CALIFORNIA 94545

Exhaust Hoods without Exhaust Fire Dampers.

MODEL: # CWCC–CR250 14451 MH18376

Distance from cooking surface to edge of hood:	Min. exhaust air flow CFM/FT. of hood length	Max. supply air flow CFM/FT. of hood length	Min. Overhang Open Sides	Front	Max. cooking surface temperature
MIN.: 36 MAX.: 48	250	125	6	15	600°

Greater exhaust and/or lesser supply air flow rates may be required for complete vapor and smoke removal in specific installation.
Replace grease filters with U.L. classified filters only.

LIGHTING: 120VAC 60 Hz 12 AMPS 1/0

U.L. HOOD PLATE

ATTACHED TO HOOD

TYPICAL HANGER BRACKET LOCATIONS SHOWN FOR A HOOD WITH A BACK AND LEFT SIDE 3" AIRSPACE

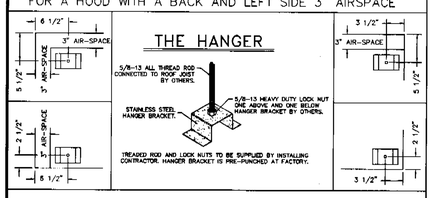

GREASE GUZZLER™

ADJUSTABLE CARTRIDGE FILTER

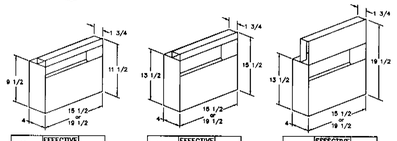

MODEL	EFFECTIVE AREA	WEIGHT
GG1216	0.32	7 lbs.
GG1220	0.41	8 lbs.

MODEL	EFFECTIVE AREA	WEIGHT
GG1616	0.40	10 lbs.
GG1620	0.51	11 lbs.

MODEL	EFFECTIVE AREA	WEIGHT
GG2016	0.40	11 lbs.
GG2020	0.51	12 lbs.

AIR FLOW CHARACTERISTICS

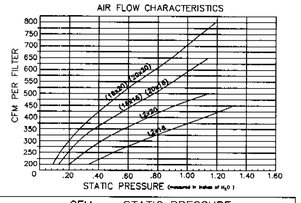

CFM vs. STATIC PRESSURE

CFM PER FILTER	STATIC PRESSURE FILTER SIZE INCHES (HEIGHT x WIDTH) 12X16	12X20	16x16	16X20	20X16	20x20
200	0.33	0.20	0.13	0.09	0.09	0.09
250	0.49	0.30	0.19	0.14	0.14	0.14
300	0.70	0.41	0.26	0.20	0.20	0.20
350	0.90	0.57	0.38	0.26	0.26	0.26
400	1.12	0.74	0.50	0.35	0.35	0.35
450	1.35	0.92	0.63	0.45	0.45	0.45
500		1.15	0.77	0.55	0.55	0.55
550			0.90	0.65	0.65	0.65
600			1.01	0.77	0.77	0.77
650			1.12	0.88	0.88	0.88
700				0.98	0.98	0.98
750				1.08	1.08	1.08
800				1.19	1.19	1.19
EFFECTIVE AREA	0.32	0.41	0.40	0.51	0.40	0.51
QUANTITY	x ( )	x ( )	x ( )	x (7)	x ( )	x ( )

TOTAL CFM 3600 ÷ 3.57 = 3.57

Recommended Operating Range of Filter (800 to 1400 FPM). TOTAL EFFECTIVE AREA / ACTUAL FPM 1008

Minimum distance between lowest edge of grease filters and cooking surface

No exposed flame (grills and fryers)	24"
Exposed flame (ranges and burners)	24"
Exposed charcoal or charbroiler type fires	42"

THE LIGHT

- GEMINI AIR SYSTEMS
- MEETS NFPA CODE 96 AND NEC 410
- SPECIFICALLY DESIGNED FOR CANOPY HOODS
- INCANDESCENT – RATED FOR 100 WATTS

LISTED UL FILE #30663

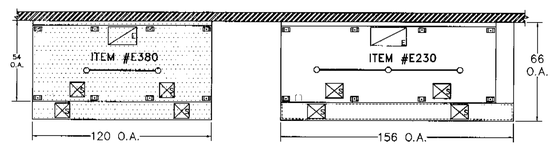

HOOD PLAN

SCALE: 1/4"=1'0"

EXHAUST COLLAR EXHAUST COLLAR MUST BE INSTALLED WITHIN THE SHADED AREA.

SPECIFY: ☐ SHIPPED LOOSE ☐ FACTORY WELDED

(COLLAR WILL BE SHIPPED LOOSE IF NOT SPECIFIED)

SUPPLY COLLAR(S)* WILL BE FACTORY WELDED.
*CONSULT FACTORY FOR ALTERNATE LOCATION(S).

ITEM #E230

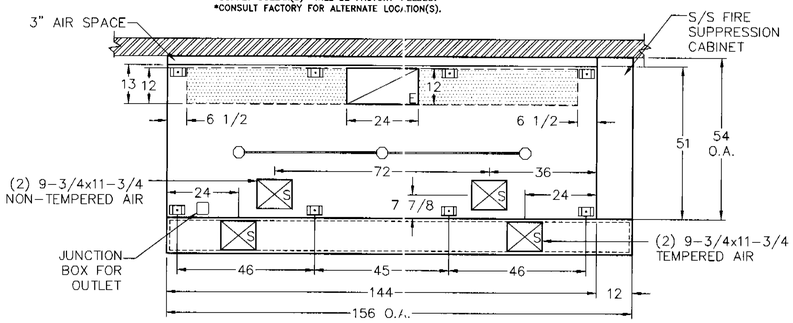

PLAN VIEW

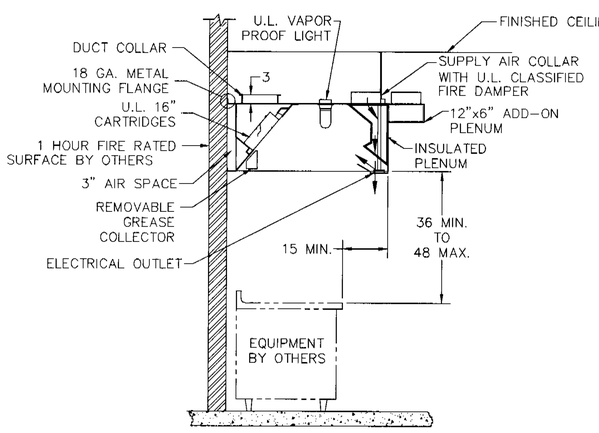

SECTION VIEW

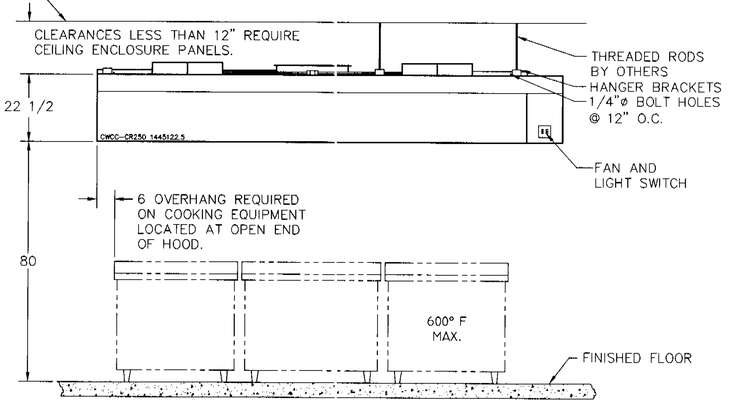

FRONT ELEVATION

ALL DIMENSIONS ARE IN INCHES

HOOD WIEGHT WITH PLENUM: 627

ITEM # SF–1

GEMINI AIR SYSTEMS FILTERED SUPPLY AIR FAN

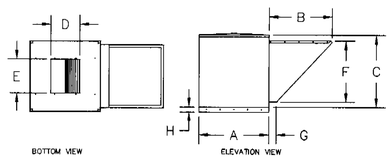

DIMENSIONAL DATA SUFA MODELS:

MODEL	A	B	C	D	E	F	G	H	SHIP. WT.
SU–FA–1515	39–7/8	38	41 1/2	16 1/8	18 5/8	35 13/16	3	2	245

DIMENSIONAL DATA SUFA MODELS:

MODEL	HP	0.250" SP CFM	0.375" SP CFM	0.500" SP CFM	0.625" SP CFM	0.750" SP CFM	1.000" SP CFM
SU–FA–1515	1 1/2	4800	4600	4550	4500	4450	4200

STANDARD FEATURES

- ETL LISTED.
- CONSTRUCTED OF HOT DIPPED GALVANIZED STEEL.
- CORROSION RESISTANT FINISH.
- REMOVABLE WEATHER–TIGHT LID.
- BELT DRIVE.
- ADJUSTABLE MOTOR PULLEY.
- PERMANENT WASHABLE ALUMINUM FILTER.

LISTED ETL

CUSTOMER / GEMINI

ITEM # EF–1

GEMINI AIR SYSTEMS KITCHEN HOOD CENTRIFUGAL UPBLAST EXHAUSTER

EX–UP–245

STANDARD FEATURES

- DESIGNED FOR COMMERICIAL FOOD SERVICE APPLICATIONS.
- UL LISTED 762 FOR REMOVAL OF HIGH TEMPERATURE COOKING VAPOR.
- PREWIRED JUNCTION BOX/DISCONNECT SWITCH.
- THERMAL OVERLOAD PROTECTION (on single phase motors only).
- ADJUSTABLE PITCH MOTOR PULLY/BELT DRIVE.
- GREASE COLLECTOR BOX.

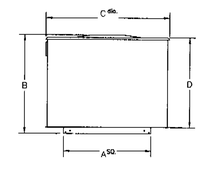

V–BELT DRIVE MODELS:

MODEL	135	185	185	200	245
A + SQ. (inches)	24	28	28	28	34
B (inches)	27 3/8	25 15/16	31 9/16	31 9/16	33 1/4
C + DIA. (inches)	33 1/2	38	39 3/4	39 3/4	44 3/4
D(inches)	22 1/8	22 7/16	28 3/4	28 3/4	33 1/4
EST. SHIP WEIGHT	137	216	287	287	388

LISTED UL U.L. 762

EX–UP–245:

HP	RPM	FAN CAPACITY IN CUBIC FEET PER MINUTE (CFM) 0.500" SP	0.750" SP	1.000" SP	1.250" SP	1.500" SP	1.750" SP	2.000" SP	2.250" SP	2.5000" SP	3.000" SP
1 1/2	797	5185	4457	3510							
2	924	6400	5820	5190	4470						
3	1005	7151	6632	6074	5471	4779	3459				
3	1150	8462	8010	7556	7068	6570	6003	5346	4284		

LISTED NFPA UL MH18376 NSF

ITEM: # E–230

DESIGN SPECIFICATION

TO BE MODEL **CWCC250**, *A COMPENSATING WALL CANOPY WITH A COMBINATION INTERNAL AND DOWNWARD SUPPLY AIR RETURN PLENUM SINGLE FILTER BANK KITCHEN VENTILATION HOOD MANUFACTURED BY GEMINI STAINLESS INC.*

THE MODEL **CWCC250** *IS FABRICATED FROM 18 GUAGE TYPE 300 S/S. WHERE EXPOSED, EXTERNAL SEAMS ARE WELDED LIQUID TIGHT AND ALL EXPOSED SURFACE WILL BE POLISHED TO A #3 OR #4 FINISH. THE* **CWCC250** *IS BUILT IN THE COMPLIANCE WITH NFPA STANDARD #96, U.L. LISTED 710, AND IS NSF APPROVED, THE HOOD WILL HAVE A FULL LENGTH SEMI–CONCEALED GREASE TRACK THAT WILL PITCH TO A REMOVABLE GREASE COLLECTOR. FILTERS TO BE U.L. CLASSIFIED 1046 ADJUSTABLE CARTRIDGE FILTERS MOUNTED AT NO LESS THAN A 45° ANGLE AND WILL BE LOCKED IN PLACE DURING NORMAL OPERATION BY MEANS OF AN UPPER HOLDING TRACK AT THE TOP OF THE FILTER. TO HAVE UL LISTED FIRE DAMPER IN SUPPLY COLLAR LOCATED AT TOP OF HOOD AND ALUMINUM SINGLE BLADE DIFFUSERS LOCATED AT BOTTOM OF HOOD. THE HOOD WILL BE EQUIPPED WITH THE U.L. LISTED LIGHT FIXTURES ON 4'–0" MIN. CENTERS, SUITABLE FOR FLUORESCENT LIGHT BULBS AND WILL BE PRE–WIRED TO A SINGLE CONNECTION POINT.*

GENERAL NOTES

IT IS THE RESPONSIBILITY OF THE INSTALLER TO INSTALL THE HOOD SYSTEM IN ACCORDANCE WITH ITS INSTALLATION INSTRUCTIONS, ALL THE APPLICABLE CODES AND TO THE APPROVAL OF THE AUTHORITY HAVING JURISDICTION.
GEMINI AIR SYSTEMS SHALL NOT BE RESPONSIBLE, OR LIABLE FOR THE IMPROPER FUNCTION ATTRIBUTALBLE TO STATIC PRESSURE OR AIR VOLUME OTHER THAN THAT INDICATED AND/OR SPECIFIED.
EXHAUST FAN(S) SHOULD BE ELECTRICALLY INTERLOCKED WITH THIER RESPECTIVE MAKE UP AIR FAN(S).

RECOMMENDED AIR BALANCE SCHEDULE

# E 230	EXHAUST AIR FROM HOOD	3600 CFM
# E 260	EXHAUST AIR FROM HOOD	+ 660 CFM
# E 380	EXHAUST AIR FROM HOOD	+ 3000 CFM
# ---	EXHAUST AIR FROM TOILETS	+ 400 CFM
TOTAL EXHAUST AIR		= 7660 CFM
# E 230	MUA TO HOOD	1500 CFM
# E 230	MUA TO ADD–ON PLENUM	+ 1740 CFM
# E 260	MUA TO HOOD	N/A CFM
# E 260	MUA TO ADD–ON PLENUM	+ N/A CFM
# E 380	MUA HOOD	+ 1250 CFM
# E 380	MUA TO ADD–ON PLENUM	+ 1450 CFM
# ---	MUA TO HOOD	+ -- CFM
# ---	MUA TO ADD–ON PLENUM	+ -- CFM
TOTAL MUA TO HOODS	(NON–TEMPERED AIR)	= 2750 CFM
TOTAL MUA TO PLENUMS	(TEMPERED AIR)	= 3190 CFM
TOTAL MAKE UP AIR FROM ROOM		= 1800 CFM
TOTAL MAKE UP AIR		= 7740 CFM

HOOD #E 230

TYPE 1 U.L. LISTED #710
MODEL# CWCC–CR250 14451
U.L. LISTED EXHAUST AIR FLOW RATE AT 250 CFM/FT OF CAPTURE AREA LENGTH. CAPTURE AREA LENGTH = 144
144 ÷ 12 = 12.00 FT X 250CFM = TOTAL MIN CFM 3000
ACTUAL CFM SPECIFIED 3600

HOOD COLLAR

DUCT SIZE = 24 X 12 ÷ 144 = 2.00 SQ. FT.
NUMBER OF DUCTS = 1 X 2.00 = TOTAL DUCT SQ. FT. 2.00
TOTAL CFM=3600 ÷TOTAL DUCT SQ. FT.2.00 =1800 FPM EXHAUST AIR VELOCITY.

STATIC PRESSURE

HOOD/FILTER 1.50 SP OTHER VIF SP
ELBOWS 0.50 SP = 2.00 TOTAL SP

EXHAUST FAN #EF230

MANUFACTURER GEMINI AIR SYSTEM MODEL EX–UP–245
MOTOR 3.00 HP 208/230/3PH VOLTAGE 1105 RPM
EXHAUST CFM 3600 AT 2.00 S.P.

EF–1

MAKE UP AIR FAN #SF–1

MANUFACTURER GEMINI AIR SYSTEM MODEL SU–FAD–1515
MOTOR 1.50 HP 208/230/3PH VOLTAGE 593 RPM
SUPPLY CFM 2750 AT 1.00 S.P.

CUSTOMER APPROVAL TO MANUFACTURE

APPROVED AS NOTED ☐
APPROVED WITHOUT EXCEPTION ☐
REVISE AND RESUBMIT ☐
SIGNATURE
NAME DATE

Date	Int.
–	–
–	–
–	–
–	–
–	–
–	–

GENERAL NOTES:
NOTE TO ARCHITECT AND/OR CONTRACTOR: Gemini Stainless, Inc. (Gemini) is a manufacturer of custom stainless steel commercial kitchen ventilation systems. Gemini is not responsible for the design of the building, or the building's structural, electrical, mechanical, plumbing, fire protection, or other systems. Gemini is responsible only for the design of its equipment, and for the interface of its equipment with the building's structural, electrical, mechanical, plumbing, fire protection, or other systems. Gemini is not responsible for any work done by others, or for any additional or changed work done by others, or for any additional or changed work done by Gemini at the request of others, or for any other work done by others. Gemini is not responsible for any delays in the performance of its work, or for any other consequences of such delays. Gemini is not responsible for the performance of any other work, or for the consequences of such work done by others

GEMINI AIR SYSTEMS

1742 SABRE STREET • HAYWARD, CALIFORNIA 94545

Exhaust Hoods without Exhaust Fire Dampers.

MODEL: # VHMC 4254

Greater exhaust and/or lesser supply air flow rates may be required for complete vapor and smoke removal in specific installation.

LIGHTING: 120VAC 60 Hz 12 AMPS 1/0

HANGER BRACKET

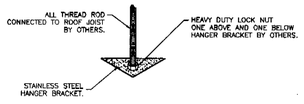

TREADED ROD AND LOCK NUTS TO BE SUPPLIED BY INSTALLING CONTRACTOR. HANGER BRACKET IS PRE-PUNCHED AT FACTORY.

TYPICAL HANGER BRACKET LOCATION

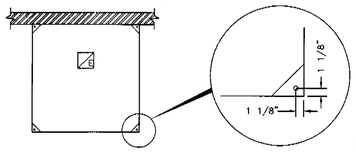

N.T.S.

EXHAUST COLLAR

SPECIFY: ☐ SHIPPED LOOSE
☐ FACTORY WELDED

(COLLAR WILL BE SHIPPED LOOSE IF NOT SPECIFIED)

ITEM #E260

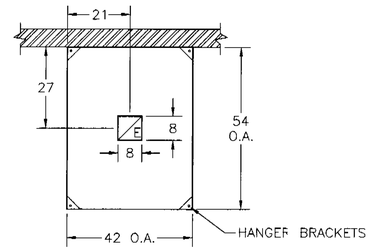

PLAN VIEW

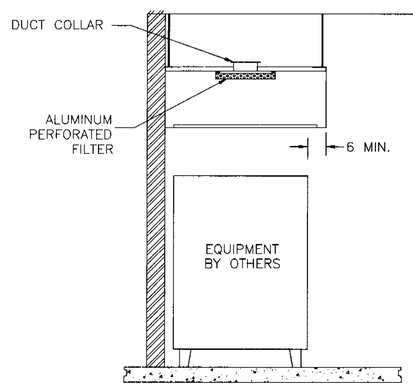

SECTION VIEW

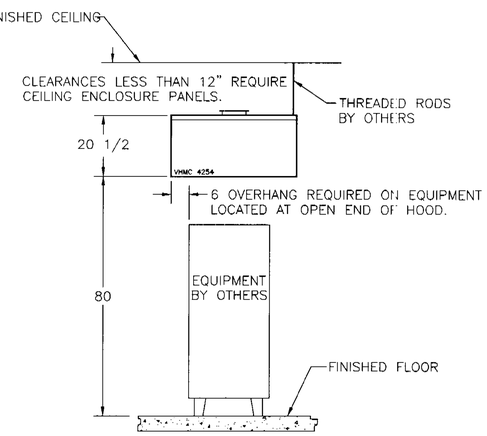

FRONT ELEVATION

ITEM E-260

ALL DIMENSIONS ARE IN INCHES

HOOD WEIGHT 113

ITEM #EF-3

GEMINI AIR SYSTEMS CENTRIFUGAL DOWNBLAST ROOF EXHAUSTER

DD-DW-126

STANDARD FEATURES

- UL LISTED 705.
- MOTOR.
- ADJUSTABLE PITCH MOTOR PULLEY.
- ALUMINUM BIRD SCREEN.
- GRAVITY BACKDRAFT DAMPER.
- SAFETY DISCONNECT SWITCH.

V-BELT DRIVE MODELS:

MODEL	DD-DW-126	DD-DW-145
L DIA. (inches)	27 3/4	27 3/4
H (inches)	16 3/8	16 3/8
E + SQ. (inches)	21	21
EST. SHIP WEIGHT	42	51

Listed UL UL 705

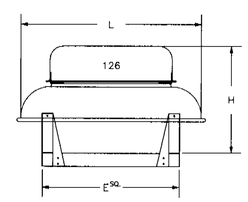

DD-DW-126

MODEL	HP	RPM	FAN CAPACITY IN CUBIC FEET PER MINUTE (CFM) 0.000" SP CFM	0.125" SP CFM	0.250" SP CFM	0.37 0" SP CFM	0.500" SP CFM	0.625" SP CFM	0.750" SP CFM	1.000" SP CFM
DD-DW-126	1/4	1300	1410	1290	1150	98[illegible]	800	N/A	N/A	N/A
DD-DW-126	1/4	1725	1582	1489	1397	13[illegible]5	1195	1050	932	578

ITEM: # E-260

DESIGN SPECIFICATION

TO BE A MODEL VHMC , A TYPE 2 WALL CANOPY LOW TEMPERATURE NON-GREASE LADEN AIR VENTILATION HOOD DESIGNED FOR USE OVER COMMERCIAL COOKING EQUIPMENT MANUFACTURED BY GEMINI AIR SYSTEMS.

THE MODEL VHMC IS FABRICATED FROM 18 & 22 GAUGE TYPE 300 STAINLESS STEEL. EXTERNAL SEAMS ARE WELDED AND/OR LIQUID TIGHT AND ALL EXPOSED SURFACE WILL BE POLISHED TO A #3 OR #4 FINISH.

THE VHMC IS NSF APPROVED. THE HOOD WILL HAVE A 2" GUTTER AROUND THE INTERNAL PERIMETER OF THE HOOD, AND WILL HAVE A REMOVABLE ALUMINUM PERFORATED FILTER.

GENERAL NOTES

IT IS THE RESPONSIBILITY OF THE INSTALLER TO INSTALL THE HOOD SYSTEM IN ACCORDANCE WITH ITS INSTALLATION INSTRUCTIONS, ALL THE APPLICABLE CODES AND TO THE APPROVAL OF THE AUTHORITY HAVING JURISDICTION.
GEMINI AIR SYSTEMS SHALL NOT BE RESPONSIBLE, OR LIABLE FOR THE IMPROPER FUNCTION ATTRIBUTALBLE TO STATIC PRESSURE OR AIR VOLUME OTHER THAN THAT INDICATED AND/OR SPECIFIED.
EXHAUST FAN(S) SHOULD BE ELECTRICALLY INTERLOCKED WITH THIER RESPECTIVE MAKE UP AIR FAN(S).

RECOMMENDED AIR BALANCE SCHEDULE

# E 230	EXHAUST AIR FROM HOOD	3600 CFM
# E 260	EXHAUST AIR FROM HOOD	+ 660 CFM
# E 380	EXHAUST AIR FROM HOOD	+ 3000 CFM
# ---	EXHAUST AIR FROM TOILETS	+ 400 CFM
TOTAL EXHAUST AIR		= 7660 CFM
# E 230	MUA TO HOOD	1500 CFM
# E 230	MUA TO ADD-ON PLENUM	+ 1740 CFM
# E 260	MUA TO HOOD	N/A CFM
# E 260	MUA TO ADD-ON PLENUM	+ N/A CFM
# E 380	MUA HOOD	+ 1250 CFM
# E 380	MUA TO ADD-ON PLENUM	+ 1450 CFM
# ---	MUA TO HOOD	+ -- CFM
# ---	MUA TO ADD-ON PLENUM	+ -- CFM
TOTAL MUA TO HOODS	(NON-TEMPERED AIR)	= 2750 CFM
TOTAL MUA TO PLENUMS	(TEMPERED AIR)	= 3190 CFM
TOTAL MAKE UP AIR FROM ROOM		= 1800 CFM
TOTAL MAKE UP AIR		= 7740 CFM

HOOD #E-260

TYPE 2 NON-GREASE LADEN AIR VENTILATION HOOD

MODEL # VH-MC 425420.5

Q= 50A = 3 SIDES OPEN PER UNIFORM MECHANICAL CODE

A= 38 X 50 ÷ 144 = 13.19 SQ. FT.

Q= 13.19 SQ. FT. X 50

Q= 660 CFM

HOOD COLLAR

DUCT SIZE = 8 X 8 ÷ 144 = 0.44 SQ. FT.

NUMBER OF DUCTS = 1 X 0.44 = TOTAL DUCT SQ. FT. 0.44

TOTAL CFM= 660 ÷TOTAL DUCT SQ. FT. 0.44 = 1500 FPM EXHAUST AIR VELOCITY.

STATIC PRESSURE

HOOD/FILTER 0.50 SP OTHER VIF SP

ELBOWS VIF SP = 0.50 TOTAL SP

EXHAUST FAN #EF-260

MANUFACTURER GEMINI AIR SYSTEM MODEL DD-DW-126

MOTOR 0.25 HP 115/230/1PH VOLTAGE 1300 RPM

EXHAUST CFM 660 AT 0.50 S.P.

EXHAUST FAN

MANUFACTURER ____ MODEL ____

MOTOR ____ HP ____ VOLTAGE ____ RPM

SUPPLY CFM ____ AT ____ S.P.

CUSTOMER APPROVAL TO MANUFACTURE

APPROVED AS NOTED ☐

APPROVED WITHOUT EXCEPTION ☐

REVISE AND RESUBMIT ☐

SIGNATURE ____

NAME ____ DATE ____

Rev.	Date

GENERAL NOTES

NOTE TO ARCHITECT AND/OR CONTRACTOR: Gemini Sheet Inc. ("Gemini" or "Company") is a manufacturer of custom stainless steel commercial cooking equipment and ventilation systems, and is not the "Installer" or "Contractor" of any such equipment or systems. Unless otherwise specifically agreed to in writing, Gemini does not install, or provide any labor or materials for the installation of, any equipment or systems. Gemini's obligations are limited to the sale of such equipment and systems, and to the fabrication of such equipment in accordance with the specifications, drawings, and other information provided to Gemini by the Architect and/or Contractor. Gemini is not responsible for such items as fire and sprinkler systems, or for the suitability of gas or electrical supply, or any other utilities, to the equipment furnished by Gemini. Gemini is not responsible for any equipment or systems not fabricated by Gemini, or for any modifications of Gemini's equipment or systems made after the date of shipment from the Gemini plant.

Gemini's equipment is fabricated in accordance with the specifications, drawings, and other information furnished by the Architect and/or Contractor. Gemini does not warrant the suitability of the equipment for any particular purpose, and makes no representation or warranty as to the adequacy or sufficiency of the drawings, specifications, or other information furnished by the Architect and/or Contractor. Gemini's liability for any breach of warranty, breach of contract, or for any other claim relating to the performance of the equipment, and specifically to the adequacy or sufficiency of Gemini's drawings, shall be limited to the repair or replacement of the equipment, at Gemini's option, F.O.B. Gemini's plant, upon Gemini's receiving written notice of such claim within one year after the date of shipment of the equipment from Gemini's plant.

This drawing is the exclusive property of Gemini Air Systems and may not be reproduced in whole nor in part without the written consent of Gemini Air Systems. Any such reproduction or use of the drawing or fabrication of the modules described herein is expressly forbidden and may be subject to prosecution.

GEMINI AIR SYSTEMS

1742 SABRE STREET, HAYWARD, CA. 94545 (510) 670-9090

HARMAN MANAGEMENT

KFC/A&W JIM & JASMINE
3144 S. BASCOM AVE.
SAN JOSE, CA 95124

Date 03-28-06

Scale 1/2"=1'-0"

Drawn By MAB

Checked By

Job Number

Sheet H-2

Page 2 of 4

GEMINI AIR SYSTEMS

1742 SABRE STREET · HAYWARD, CALIFORNIA 94545

Exhaust Hoods without Exhaust Fire Dampers.

MODEL.: # CWCC-CR25012051 MH18376

Distance from cooking surface to lower edge of hood.	Min. exhaust air flow CFM/FT. of hood length	Max. supply air flow CFM/FT. of hood length	Min. Overhang Open Sides	Front	Max. cooking surface temperature
MIN.: 36 MAX.: 48	250	125	6	15	600°

MFG#_____ HOOD#_____

Greater exhaust and/or lesser supply air flow rates may be required for complete vapor and smoke removal in specific installation.
Replace grease filters with U.L. classified filters only.

LIGHTING: 120VAC 60 Hz 12 AMPS 1/0

U.L. HOOD PLATE

ATTACHED TO HOOD

TYPICAL HANGER BRACKET LOCATIONS SHOWN FOR A HOOD WITH A BACK AND LEFT SIDE 3" AIRSPACE

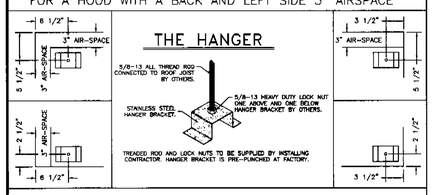

GREASE GUZZLER™ ADJUSTABLE CARTRIDGE FILTER

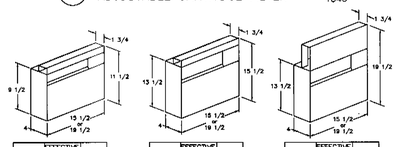

MODEL	EFFECTIVE AREA	WEIGHT
GG1216	0.32	7 lbs.
GG1220	0.41	8 lbs.

MODEL	EFFECTIVE AREA	WEIGHT
GG1616	0.40	10 lbs.
GG1620	0.51	11 lbs.

MODEL	EFFECTIVE AREA	WEIGHT
GG2016	0.40	11 lbs.
GG2020	0.51	12 lbs.

AIR FLOW CHARACTERISTICS

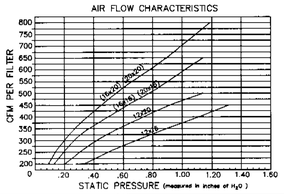

CFM vs. STATIC PRESSURE

CFM PER FILTER	STATIC PRESSURE FILTER SIZE INCHES (HEIGHT x WIDTH) 12X16	12X20	16x16	16X20	20X16	20x20
200	0.33	0.20	0.13	0.09	0.09	0.09
250	0.49	0.30	0.19	0.14	0.14	0.14
300	0.70	0.41	0.26	0.20	0.20	0.20
350	0.90	0.57	0.38	0.26	0.26	0.26
400	1.12	0.74	0.50	0.35	0.35	0.35
450	1.35	0.92	0.63	0.45	0.45	0.45
500		1.15	0.77	0.55	0.55	0.55
550			0.90	0.65	0.65	0.65
600			1.01	0.77	0.77	0.77
650			1.12	0.88	0.88	0.88
700				0.98	0.98	0.98
750				1.08	1.08	1.08
800				1.19	1.19	1.19
EFFECTIVE AREA	0.32	0.41	0.40	0.51	0.40	0.51
QUANTITY	x ( )	x ( )	x (1)	x (5)	x ( )	x ( )

TOTAL CFM 2500 ÷ 0.40 + 2.55 + + = 2.95

Recommended Operating Range of Filter (800 to 1400 FPM). TOTAL EFFECTIVE AREA ACTUAL FPM 847

Minimum distance between lowest edge of grease filters and cooking surface

No exposed flame (grills and fryers)	24"
Exposed flame (ranges and burners)	24"
Exposed charcoal or charbroiler type fires	42"

THE LIGHT

- GEMINI AIR SYSTEMS
- MEETS NFPA CODE 96 AND NEC 410
- SPECIFICALLY DESIGNED FOR CANOPY HOODS
- INCANDESCENT – RATED FOR 100 WATTS

UL LISTED FILE #E80663

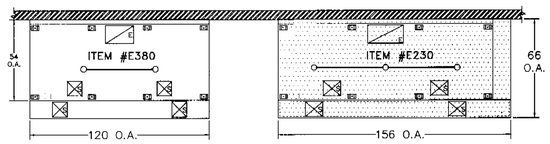

HOOD PLAN

SCALE:1/4"=1'

EXHAUST COLLAR — EXHAUST COLLAR MUST BE INSTALLED WITHIN THE SHADED AREA.

SPECIFY: ☐ SHIPPED LOOSE ☐ FACTORY WELDED

(COLLAR WILL BE SHIPPED LOOSE IF NOT SPECIFIED)

SUPPLY COLLAR(S)* WILL BE FACTORY WELDED.
*CONSULT FACTORY FOR ALTERNATE LOCATION(S).

ITEM #E380

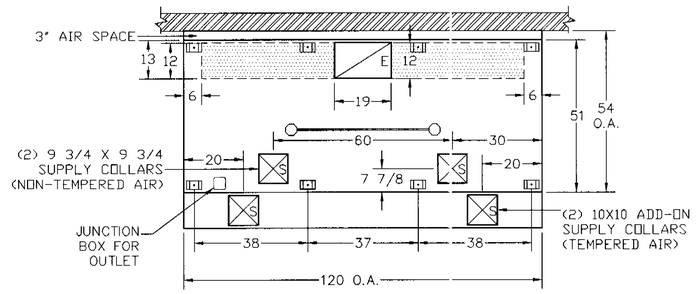

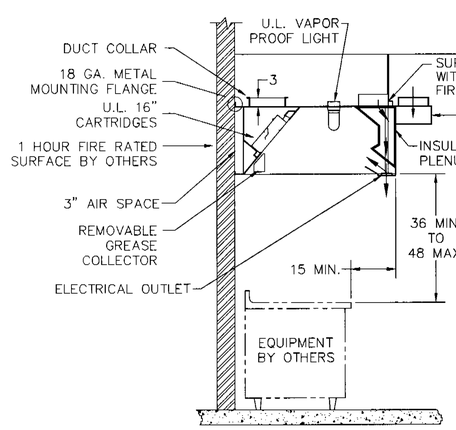

SECTION VIEW

PLAN VIEW

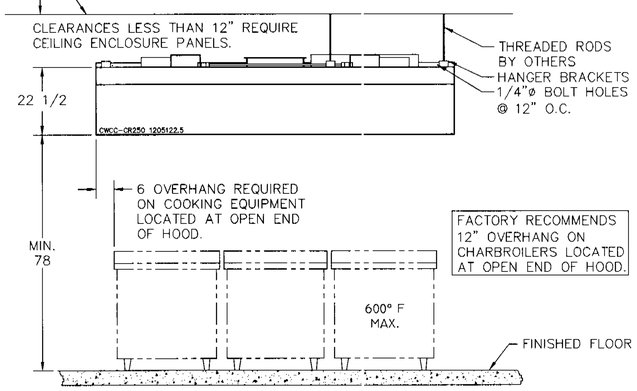

FACTORY RECOMMENDS 12" OVERHANG ON CHARBROILERS LOCATED AT OPEN END OF HOOD.

FRONT ELEVATION

NOTE:
- A 6" MINIMUM CLEARANCE IS REQUIRED ABOVE ALL HOODS. CONSULT FACTORY FOR VARIANCE.
- ALL DIMENSIONS ARE IN INCHES

HOOD WEIGHT: 485 LBS.

GEMINI AIR SYSTEMS — ITEM # SF-2

225 INDIRECT FIRED GAS PACKAGED FURNACE WITH DOWN DISCHARGE PLENUM AND EVAPORATOR COOLER

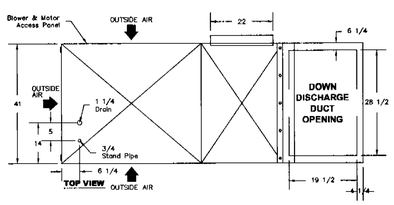

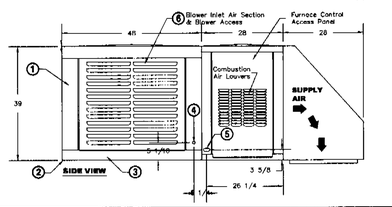

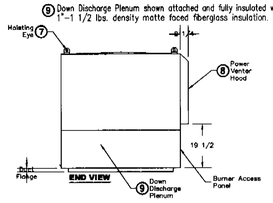

NOTES:
1. Base Unit Constructed of 20 ga. G90, Galvanized Finish. Base Unit shown with a Down Discharge Plenum attached. (shipped loose)
2. Heat only units have weep holes on the G90 Galvanized pan to curb exterior.
3. Evap. units include 300 Series SS Samp (12 yr. Warranty) with pump as Standard Features. Optional fill and drain kit available.
4. Evap. Water Inlet is 1/2" in diameter.
5. Duct Furnace Standard AGA & CGA Listed. Gas Inlet is 3/4" NPS.
6. Indoor units will not have inlet louvers. Solid panels are placed on the sides of the blower section. The end is open on the inlet.
7. Hoisting Eyes are shipped loose for field installation. Remove outer hoisting eyes after unit is installed.
8. Indoor or Outdoor Kit not shown. See Furnace Options for details. Power Venter Rain Shield or Square-to-Round Adapter shipped loose for field installation.
9. Down Discharge Plenum shown attached and fully insulated with 1"-1 1/2 lbs. density matte faced fiberglass insulation.

NET WEIGHT: 1200 lbs.

ITEM # EF-2

GEMINI AIR SYSTEMS KITCHEN HOOD CENTRIFUGAL UPBLAST EXHAUSTER

EX-UP-245

STANDARD FEATURES

- DESIGNED FOR COMMERICIAL FOOD SERVICE APPLICATIONS.
- UL LISTED 762 FOR REMOVAL OF HIGH TEMPERATURE COOKING VAPOR.
- PREWIRED JUNCTION BOX/DISCONNECT SWITCH.
- THERMAL OVERLOAD PROTECTION (on single phase motors only).
- ADJUSTABLE PITCH MOTOR PULLY/BELT DRIVE.
- GREASE COLLECTOR BOX.

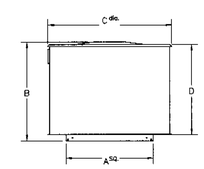

V-BELT DRIVE MODELS:

MODEL	135	165	185	200	245
A + SQ. (inches)	24	28	28	28	34
B (inches)	27 3/8	25 15/16	31 9/16	31 9/16	36 1/4
C + DIA. (inches)	33 1/2	38	39 3/4	39 3/4	44 3/4
D(inches)	22 1/8	22 7/16	28 3/4	28 3/4	36 1/4
EST. SHIP WEIGHT	137	216	287	287	388

UL LISTED UL 762

EX-UP-245:

HP	RPM	FAN CAPACITY IN CUBIC FEET PER MINUTE (CFM) 0.500" SP	0.750" SP	1.000" SP	1.250" SP	1.000" SP	1.750" SP	2.000" SP	2.250" SP	2.5000" SP	3.000" SP
1 1/2	797	5185	4457	3510							
2	924	6400	5820	5190	4470						
3	1005	7151	6632	6074	5471	4779	3459				
3	1150	8462	8010	7556	7068	6570	6003	5346	4284		

ITEM: # E-380

NFPA MH18376

DESIGN SPECIFICATION

TO BE MODEL **CWCC-CR250**, A COMPENSATING WALL CANOPY WITH A COMBINATION INTERNAL AND DOWNWARD SUPPLY AIR RETURN PLENUM SINGLE FILTER BANK KITCHEN VENTILATION HOOD MANUFACTURED BY GEMINI AIR SYSTEMS INC.

THE MODEL **CWCC-CR250** IS FABRICATED FROM 18 GAUGE TYPE 304 S/S. (WHERE EXPOSED), EXTERNAL SEAMS ARE WELDED LIQUID TIGHT AND ALL EXPOSED SURFACE WILL BE POLISHED TO A #3 OR #4 FINISH. THE **CWCC-CR250** IS BUILT IN THE COMPLIANCE WITH NFPA STANDARD #96, U.L. **LISTED 710**, AND IS NSF APPROVED, THE HOOD WILL HAVE A FULL LENGTH SEMI-CONCEALED GREASE TRACK THAT WILL PITCH TO A REMOVABLE GREASE COLLECTOR. FILTERS TO BE U.L. CLASSIFIED 1046 ADJUSTABLE CARTRIDGE FILTERS MOUNTED AT NO LESS THAN A 45° ANGLE AND WILL BE LOCKED IN PLACE DURING NORMAL OPERATION BY MEANS OF AN UPPER HOLDING TRACK AT THE TOP OF THE FILTER. TO HAVE UL LISTED FIRE DAMPER IN SUPPLY COLLAR LOCATED AT TOP OF HOOD AND ALUMINUM SINGLE BLADE DIFFUSERS LOCATED AT BOTTOM OF HOOD.

THE HOOD WILL BE EQUIPPED WITH U.L. LISTED #UL-1571 LIGHT FIXTURES, NSF APPROVED FOR RESTAURANT USE AND WILL BE PRE-WIRED TO A SINGLE CONNECTION POINT.

HOOD

TYPE 1 U.L. LISTED #710

MODEL# CWCC-CR250 1205122.5

U.L. LISTED EXHAUST AIR FLOW RATE AT 250 CFM/FT OF CAPTURE AREA LENGTH. CAPTURE AREA LENGTH = 120

120 ÷ 12 = 10.00 FT X 250CFM = TOTAL MIN CFM 2500

ACTUAL CFM SPECIFIED 3000

HOOD COLLAR

DUCT SIZE = 19 X 12 ÷ 144 = 1.58 SQ. FT.

NUMBER OF DUCTS = 1 X 1.58 = TOTAL DUCT SQ. FT. 1.58

TOTAL CFM= 3000 ÷TOTAL DUCT SQ. FT. 1.58 = 1899 FPM EXHAUST AIR VELOCITY.

STATIC PRESSURE

HOOD/FILTER 1.50 SP OTHER VIF SP

ELBOWS 0.50 SP = 2.00 TOTAL SP

EXHAUST FAN # EF380

MANUFACTURER GEMINI AIR SYSTEMS MODEL EX-UP-245

MOTOR 3.00 HP 208/230/3PH VOLTAGE 1150 RPM

EXHAUST CFM 3000 AT 2.00 S.P. EF-2

MAKE UP AIR FAN # SF-2

MANUFACTURER GEMINI AIR SYSTEMS MODEL SU-IDFG-ECD-225

MOTOR 1.50 HP 208/230/3PH VOLTAGE 40° TEMP. RISE

SUPPLY CFM 3190 AT 1.00 S.P.

RECOMMENDED AIR BALANCE SCHEDULE

# E 230	EXHAUST AIR FROM HOOD	3600 CFM
# E 260	EXHAUST AIR FROM HOOD	+ 660 CFM
# E 380	EXHAUST AIR FROM HOOD	+ 3000 CFM
# ---	EXHAUST AIR FROM TOILETS	+ 400 CFM
	TOTAL EXHAUST AIR FROM HOODS	= 7660 CFM
# E 230	MUA TO HOOD	1500 CFM
# E 230	MUA TO ADD-ON PLENUM	+ 1740 CFM
# E 260	MUA TO HOOD	N/A CFM
# E 260	MUA TO ADD-ON PLENUM	+ N/A CFM
# E 380	MUA HOOD	+ 1250 CFM
# E 380	MUA TO ADD-ON PLENUM	+ 1450 CFM
# ---	MUA TO HOOD	+ -- CFM
# ---	MUA TO ADD-ON PLENUM	+ -- CFM
	TOTAL MUA TO HOODS (NON-TEMPERED AIR)	= 2750 CFM
	TOTAL MUA TO PLENUMS (TEMPERED AIR)	= 3190 CFM
	TOTAL MAKE UP AIR FROM ROOM	= 1800 CFM
	TOTAL MAKE UP AIR	= 7740 CFM

GENERAL NOTES

IT IS THE RESPONSIBILITY OF THE INSTALLER TO INSTALL THE HOOD SYSTEM IN ACCORDANCE WITH ITS INSTALLATION INSTRUCTIONS, ALL THE APPLICABLE CODES AND TO THE APPROVAL OF THE AUTHORITY HAVING JURISDICTION.
GEMINI AIR SYSTEMS SHALL NOT BE RESPONSIBLE, OR LIABLE FOR THE IMPROPER FUNCTION ATTRIBUTALBLE TO STATIC PRESSURE OR AIR VOLUME OTHER THAN THAT INDICATED AND/OR SPECIFIED. EXHAUST FAN(S) SHOULD BE ELECTRICALLY INTERLOCKED WITH THEIR RESPECTIVE MAKE UP AIR FAN(S).

CUSTOMER APPROVAL TO MANUFACTURE

APPROVED AS NOTED ☐
APPROVED WITHOUT EXCEPTION ☐
REVISE AND RESUBMIT ☐
SIGNATURE _____
NAME _____ DATE _____

Date	Int.
-	-
-	-
-	-
-	-
-	-
-	-

GENERAL NOTES
NOTES to ARCHITECT AND/OR CONTRACTOR: Notes Size, Spec. Detail or Generic is a reminder to the architect and/or contractor.
Facility is to conform to all applicable codes and ordinances of the problem and/or contractor and to have been approved by the Fire Department and Building Department prior to fabrication. Contractor is responsible for all dimensions and conditions shown on these drawings and any discrepancies must be reported to the undersigned prior to fabrication or work shall proceed at contractor's risk.
Drawings are not to be scaled.
Drawings are to be considered as the plan & specifications that are required by Gemini Air Systems to fabricate the equipment described herein. Any deviations from these drawings and specifications will be made only by or with the written approval of Gemini Air Systems.
This drawing is the property of Gemini Air Systems and is not to be used for any purpose other than that for which it is specifically loaned or submitted. It is to be returned upon request. Its contents are not to be disclosed to others without written permission of Gemini Air Systems.
Drawings are to be used for the purpose of obtaining quotations, for the purpose of obtaining approvals, or for the purpose of fabrication.

GEMINI AIR SYSTEMS

1742 SABRE STREET, HAYWARD, CA. 94545 (510) 670-9090

"This drawing is the property of Gemini Air Systems and is not to be used for any purpose other than that for which it is specifically loaned or submitted. It is to be returned upon request. Its contents are not to be disclosed to others without written permission of Gemini Air Systems. Unauthorized reproduction of this drawing, or duplication of the machine described herein is expressly forbidden and may be subject to prosecution.

For HARMAN MANAGEMENT

Location KFC/A&W JIM & JASMINE 3144 S. BASCOM AVE. SAN JOSE, CA 95124

Date 03-28-06

Scale 1/2"=1'-0"

Drawn By MAB

Checked By

Job Number

Sheet H-3

CURB FOR
EXHUAST FAN #EF230 & #EF380

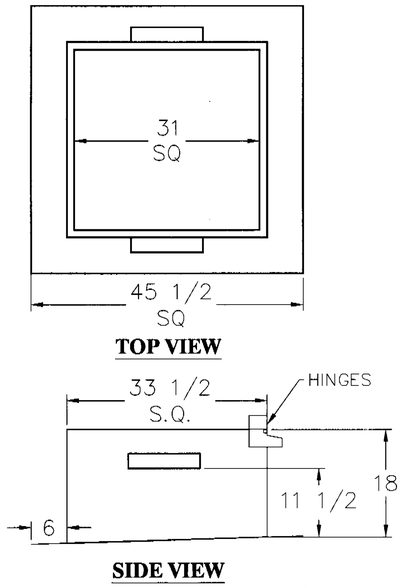

MODEL #CB-EX-UP-245

CURB FOR
EXHUAST FAN #EF260

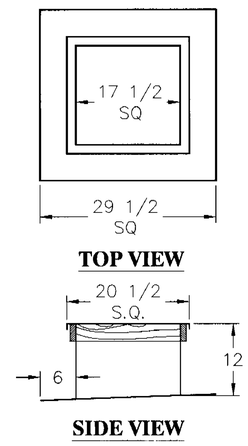

MODEL #CB-DD-DW-126

CURB FOR
SUPPLY FAN #1

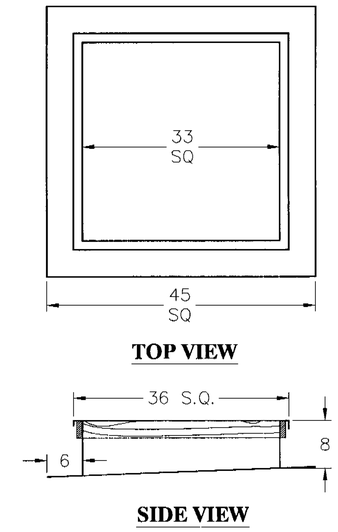

MODEL #CB-SU-FA-1515

CURB FOR
SUPPLY FAN #2

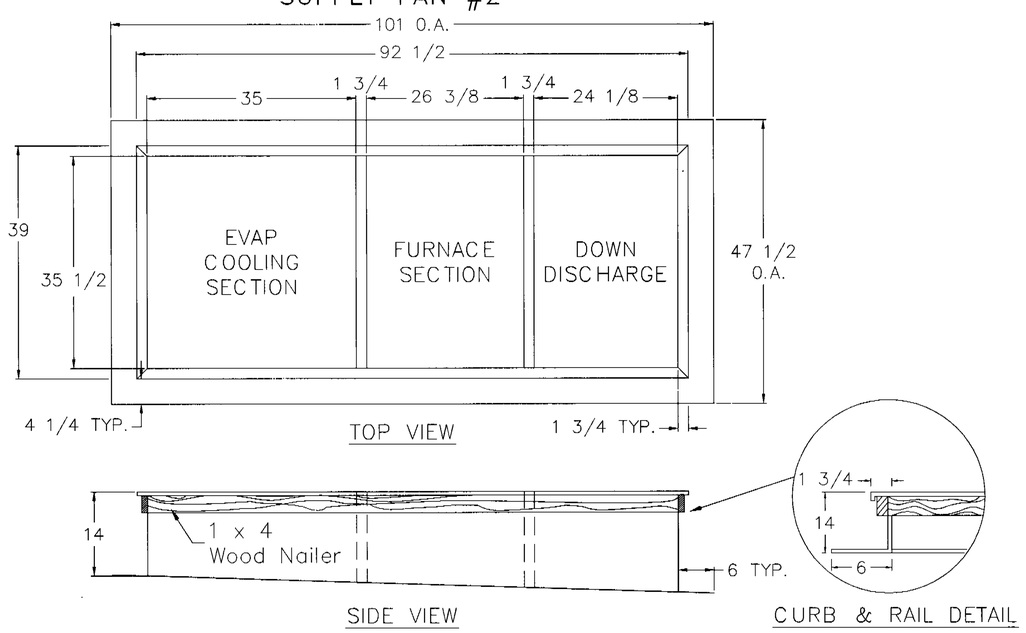

MODEL #CB-SU-IDFG-ECD-225

NOTE:
ROOF PITCH: 3/8" PER FOOT

Revision	Int.
06-11-04	MAB

GEMINI AIR SYSTEMS

1742 SABRE STREET, HAYWARD, CA. 94545 (510) 670-9090

For: HARMAN MANAGEMENT

Location: KFC/A&W JIM & JASMINE
3144 S. BASCOM AVE.
SAN JOSE, CA 95124

Date: 03-28-06
Scale: 1"=1'-0"
Drawn By: MAB
Checked By:
Job Number:

Sheet: H-4

Page 4 of 4

SCOPE OF WORK

The Scope of Work sheets document how the Owner, GC, Vendor, and Distributor interact on items with shared responsibilities. The majority of this building is supplied and installed by the GC. Some items are supplied and installed by the owner. The scope of work covers the remaining items that are not as simple.

Definitions:

BOH - (Back of House) - The portion of the restaurant behind the service counter. Includes Service Counter, Kitchen and Support areas.
CONSOL. PKG. (Consolidated Package) - Multiple items combined into a single package and shipped to the destination by the Distributor.
C.M. - (Construction Manager) - Representative of Owner who manages construction.
DESTINATION - Location where an item is to be delivered. Example: the site; the G.C.'s warehouse, the Installer's shop, etc.
DIRECT - Items shipped directly from Supplier to destination - Ordered by Owner or G.C.
DISTRIB. (Distributor) - Example: N. Wasserstrom & Sons; PrimeSource; UFPC Equipment Sales Group.
DROP (Drop Shipped) - Items shipped directly from Supplier to destination - Ordered by Distributor.
FOH (Front of House) - The portion of the restaurant in front of the service counter. Includes Dining, Front Hall, and Restroom areas.
G.C. (General Contractor) - Items shipped / delivered to destination by General Contractor.
INSTALLED BY - Who has the responsibility for having an item installed at the site.
INSTALLER - Who physically installs an item at the site.
MANUF. (Manufacturer) - Manufacturer who fabricates, constructs, assembles an item.
ORDERED BY - Who has the responsibility to place the order of an item with the Supplier.
OWNER - Owner of the facility.
PACKAGE # - Which consolidated Distributor package an item is shipped in. See Consol. Pkg. definition.
PAID FOR BY - Who has the responsibility for final payment of an item and/or installation.
P.O. (Plan Owner) - YUM! Employee responsible for maintaining prototype documents.
R.A.P. (Regional Architect Partner) - YUM! Employee responsible for approval of site-specific projects.
RECEIVED BY - Who has the responsibility for receiving, signing for and storing an item at the destination.
SHIPPED BY - Who has the responsibility to coordinate shipping and delivery of the item to the site or to the destination.
SHIPPING METHOD - How an item gets to a site.
SUPPLIER - Who an item is purchased from. Example: a Manufacturer; an Equipment Consolidator, etc.
WARRANTY, MATERIAL / INSTALLATION - Who is responsible for warranty repairs during the warranty period.

ITEM DESCRIPTION & APPLICATION	NATIONAL SUPPLIER INFO.	MFR. #	A&E ITEM #	ORDERED BY	SHIPPED BY	SHIPPING METHOD	PACKAGE #	RECEIVED BY	INSTALLED BY	WARRANTY MATERIAL/INSTALL	PAID FOR BY	G.C. SCOPE OF WORK	VENDOR'S SCOPE OF WORK	OWNER'S SCOPE OF WORK/GEN. COMMENTS
AIR CURTAINS (ONLY IF REQUIRED BY CODE)	**Marley Electric** Michael Goldwin Phone: (800) 421-1266 x250 Fax: (310) 324-3030	E2400-1115F	B151 Drive Thru Window	Distrib.	Distrib.	Consol. Pkg.	1	G.C.	G.C.	Owner /G.C.	Owner	Material: N/A Install: Complete installation of Rough-in and Final electrical contacts. Install Owner supplied micro switch in drive thru window as required.	Material: Supplier to ship complete package including electrical contacts. Install: N/A	Optional - Install only if required by local code. Standard storefront configuration at the drive-thru window must be modified for installations.
		E4200-1175	B150 Service Entrance	Distrib.	Distrib.	Consol. Pkg.	1	G.C.	G.C.	Owner /G.C.	Owner	Material: N/A Install: Complete installation of Rough-in and Final electrical contacts.	Material: Supplier to ship complete package including electrical contacts. Install: N/A	Optional - Install only if required by local code.
ARTWORK	**MetroMedia Technologies** Marian Van Poppel ext. 223 Michael Goldwin ext. 221 Phone: 586-978-8856	Varies	N/A	Distrib.	Distrib.	Drop	N/A	G.C.	G.C.	Owner /G.C.	Owner	**Material:** Any mounting hardware or adhesive as recomended by manufacturer's installation instructions. **Install:** All owner supplied artwork as produced by vendor.	**Material:** Interior welcome art vinyl on 6mm Cintra, (4) framed restroom art prints, dining room murals on rolled vinyl or mounted panels as shown on drawings, soffit graphics and/or misc. mounted graphics as shown on drawings. **Install:** N/A	**General Comments** - The supplier provides detailed installation instructions with the wall murals. Failure to follow the instructions for wall preparation, adhesive, or installation methods may result in damage to the murals or an unapproved installation. Contact the supplier if additional copies are needed.
AWNINGS/ CANOPIES/ TOWER CAPS Company CMs to utilize the Company Regionalization Strategy. (Contact Justin Ashby for more information EXTERIOR ARTWORK & EXPRESSION PANELS	**Cummings Signs** Terry Dorgan Phone: 614-895-2240 Fax: 614-901-0829 **Everbrite** Ana Dominguez Phone: 414-529-7650 Fax: 414-529-7191 **Zimmerman Signs** Mike Coppinger Phone: 800-888-1327 Fax: 903-535-7401	Varies	Varies	C.M.	Manuf.	Drop	N/A	Manuf. (Local Installer)	Manuf. (Local Installer)	Owner/Owner	Owner	**Material:** Blocking as detailed and required for awnings and canopies. **Install:** Provide dimension assistance to Supplier's representative if requested by supplier, provide J-Boxes, conduit, wiring, and final electrical connections as noted on drawings. Note: G.C. Responsible for Watertight installation of Tower Cap. **Material:** N/A **Install:** N/A	**Material:** Backlit awnings with wet location light fixtures, lamps and fasteners, backlit tower cap with wet location light fixtures and fasteners, Canopies with diagonal supports and downlights and/or clock, trellis elements (where occurs), awning permits where req'd. **Install:** Supplier must verify actual field dimensions with Supplier's Designated Field Representative or as-built drawings. Complete installation of awnings, tower caps, canopies, and trellis elements. **Material:** LJS shutters with graphics, KFC, A&W and Taco Bell graphic expression panels. All "where occurs". "Welcome" vinyl graphics for front entry. **Install:** LJS shutters with graphics, KFC, A&W, and Taco Bell graphic expression panels. All "where occurs". "Welcome" vinyl graphics for front entry.	General Comments - Supplier contracts delivery of awnings and exterior image elements to local installer for delivery to site and installation.
BAR STOOLS (CORE DRILLED) **LA concept only** **L concept only**	**West Coast Seating** Norman Sobel phone: 800-243-3150 **MTS Seating** Laurie Prater (734) 847-3875 ext. 222	Varies	N/A	Distrib.	Distrib.	Drop	N/A	G.C.	G.C.	Owner /G.C.	Owner	**Material:** N/A **Install:** G.C. to receive and store core drilled bar stools, core drill per plan after installation of tile, grout as detailed, repair tile as required.	**Material:** Core drilled bar stools **Install:** N/A	
CO2 - BULK	**MVE (bulk tank)** Cathy Bartusek Phone: (952) 882-5185 ext. 5169 Fax: (800) 247-4446 x5169 **NU CO2** (CO2 and service) Lynn Heller ext. 3483 or Matt Sebuckat ext. 3472 Phone: (800) 472-2855	Varies	S580	Distrib.	Distrib.	Drop	N/A	G.C.	Manuf. (Local Installer)	Owner/Owner	Owner	**Material:** N/A **Install:** Receive tank and schedule installation. Coordinate with Pepsi installation.	**Material:** Bulk tank, fill box, supply lines. **Install:** Bulk tank, fill box, supply lines from fill box to tank, supply lines from tank to syrup rack location.	**General Comment:** CM coordinates installation of tank, fill box, lines, and connectors. Installation is performed by local NU CO2 rep. Standard process is for the owner to provide the tank. CM to contact YUM! Facility Leader to determine if tank will be rented.
CCTV (AS REQUIRED BY CAP INDEX) **Checkpoint is the vendor for K, KA, KL, KT and TL concepts. ADT is the vendor for LA concepts**	**Checkpoint Systems, Inc.** Brian Baker Phone: 972-625-3155 Fax: 972-625-5701 brian.baker@checkpt.com Lynn Hegee (for installation) Phone: (800) 285-0492 **ADT** Ralph Mertz Phone: 800-848-2872 x2773 Fax: 614-492-2556 rmertz@adt.com	Varies	U-022	Distrib.	Distrib.	Drop	N/A	Manuf. (Local Installer)	Manuf. (Local Installer)	Owner/Owner	Owner	**Material:** J-Boxes, conduits and outlets as shown in drawings. **Install:** Set equipment as shown on drawings. Install wall mounted digital recorder cabinet. Coordinate installation of office shelving prior to supplier installation of CCTV.	**Material:** Cameras, monitors, Image-Vault digital recorder cabinet brackets and cable **Install:** Cameras and monitors; Mount cameras and monitors, and connect cables (Video/Power) Image-Vault digital system; Set recorder and connect to camera and monitors. Security cabinet for digital system; Pre-wire prior to ceiling installation. Cable; Complete installation of cabling runs, pre-wire prior to ceiling installation.	Owner Scope: C.M. to forward Loss Prevention's site specific security recommendation (based on C.A.P. index) to Site Specific Consultant and distributor. Item not included in Standard Distributor Model for all concepts except the TL60. TL60 includes a single camera system.
CLEARANCE BAR (@ DRIVE THRU)	**Lincoln Industries (DLC of KY)** Michael Winn Phone: (502) 425-3333 Fax (502) 425-7004 mwinn2@bellsouth.net	LI-2801-YUM 906-Y2	N/A	Distrib.	Distrib.	Drop	N/A	G.C.	G.C.	Owner /G.C.	Owner	**Material:** N/A **Install:** Complete installation of footing and owner supplied material.	**Material:** Clearance bar, bracket, sign, anchor bolt pattern and anchor bolts. **Install:** N/A	
CREDIT CARD PAYMENT SYSTEM **T and TL concepts only**	**Hughes Network Systems** (satellite dish and IDU) **NPC** (card reader) **Joe Kirby - YUM Brands Information Technology Group** (for all satellite and cable order/ install issues) Phone: 972-338-8610 Email: joe.kirby@yum.com **Patty Armstrong - YUM Brands Information Technology Group** (for all card reader terminal order/ install issues) Phone: 949-863-4435 Email: patty.armstrong@yum.com	N/A	U-081 Credit Card Reader F-050 IDU (Router)	Owner	Manuf.	Direct	N/A	Manuf. (Local Installer)	Manuf. (Local Installer)	Owner/Owner	Owner	**Material:** J-Boxes, conduits, pull strings, electrical circuits/ outlets as shown in drawings. **Install:** All items noted in GC material section. Cut hole in counter top for power and ethernet cable.	**Material:** VSAT satellite dish with sled, roof pad (1/4" thick minimum), IDU, card readers, cables, connectors, ethernet jacks, and any other system components required to provide a complete operating system. **Install:** Entire system excluding GC scope.	Process Steps: * Joe Kirby/ Patty Armstrong to be copied on Ground Break notice and coordinate vendor arrival. Typically install will occur 2-wks prior to RTO. * After GC scope has been completed, Hughes will install satellite dish and IDU in office and run cable between. * CTA will arrive and pull data cables from office to j-boxes at the counter and install the ethernet jacks. Patch cables will be run from jacks through counter tops. * Local operations will place card readers and make final data and power connections.
DOOR - SECURITY	**LockNet** Sam Caudill Phone: 800-887-4307 x 120 Fax: 859-887-4958	DU3670L52VED		G.C.	G.C.	Direct	N/A	G.C.	G.C.	G.C./G.C.	G.C.	Material: Complete security door package including Vision Panel (without Flap), Continuous hinge, heavy duty closer, rain drip, door bottom w/ sweep, weatherstrip, kickplate and panic hardware. See Door Schedule, Page A1.1 for details. Install: Complete installation.	Material: N/A Install: N/A	**Locknet security door is approved by YUM! Brands Loss Prevention. Extended warranty provided by Locknet.**

Vincent+Murphy Incorporated
637 Fifth Avenue
San Rafael, Ca. 94901
(415) 451-2500
FAX 451-2595

LICENSED ARCHITECT
HUGH EDWARD MURPHY
No. C17926
REN. 10/31/07
STATE OF CALIFORNIA

JOB NUMBER
H0510

SUBMITTALS

03/24/06 BLDG PC#1 SUBMITTAL

REVISIONS

CONTRACT DATE:
BUILDING TYPE: KA60-Y04
PLAN VERSION: JAN 05 D
SITE NUMBER:
STORE NUMBER:

KFC / A&W

3144 S. BASCOM AVENUE
SAN JOSE, CA 95124-2022

All American Food

KA60-Y04

SCOPE OF WORK

SC-1

W:\Data\berman\2005\H0510_san jose_bascom\03_cd_current\100_YUM_Y04-SC-ALL.dwg modified by Dhernigan at July 25, 2006 - 3:50pm

SCOPE OF WORK

The Scope of Work sheets document how the Owner, GC, Vendor, and Distributor interact on items with shared responsibilities. The majority of this building is supplied and installed by the GC. Some items are supplied and installed by the owner. The scope of work covers the remaining items that are not as simple.

Definitions:

BOH - (Back of House) - The portion of the restaurant behind the service counter. Includes Service Counter, Kitchen and Support areas.
CONSOL. PKG. (Consolidated Package) - Multiple items combined into a single package and shipped to the destination by the Distributor.
C.M. - (Construction Manager) - Representative of Owner who manages construction.
DESTINATION - Location where an item is to be delivered. Example: the site; the G.C.'s warehouse, the Installer's shop, etc.
DIRECT - Items shipped directly from Supplier to destination - Ordered by Owner or G.C.
DISTRIB. (Distributor) - Example: N. Wasserstrom & Sons; PrimeSource; UFPC Equipment Sales Group.
DROP (Drop Shipped) - Items shipped directly from Supplier to destination - Ordered by Distributor.
FOH (Front of House) - The portion of the restaurant in front of the service counter. Includes Dining, Front Hall, and Restroom areas.
G.C. (General Contractor) - Items shipped / delivered to destination by General Contractor.
INSTALLED BY - Who has the responsibility for having an item installed at the site.
INSTALLER - Who physically installs an item at the site.
MANUF. (Manufacturer) - Manufacturer who fabricates, constructs, assembles an item.
ORDERED BY - Who has the responsibility to place the order of an item with the Supplier.
OWNER - Owner of the facility.
PACKAGE # - Which consolidated Distributor package an item is shipped in. See Consol. Pkg. definition.
PAID FOR BY - Who has the responsibility for final payment of an item and/or installation.
P.O. (Plan Owner) - YUM! Employee responsible for maintaining prototype documents.
R.A.P. (Regional Architect Partner) - YUM! Employee responsible for approval of site-specific projects.
RECEIVED BY - Who has the responsibility for receiving, signing for and storing an item at the destination.
SHIPPED BY - Who has the responsibility to coordinate shipping and delivery of the item to the site or to the destination.
SHIPPING METHOD - How an item gets to a site.
SUPPLIER - Who an item is purchased from. Example: a Manufacturer; an Equipment Consolidator, etc.
WARRANTY, MATERIAL / INSTALLATION - Who is responsible for warranty repairs during the warranty period.

ITEM DESCRIPTION & APPLICATION	NATIONAL SUPPLIER INFO.	MFR. #	A&E ITEM #	ORDERED BY	SHIPPED BY	SHIPPING METHOD	PACKAGE #	RECEIVED BY	INSTALLED BY	WARRANTY MATERIAL/INSTALL	PAID FOR BY	G.C. SCOPE OF WORK	VENDOR'S SCOPE OF WORK	OWNER'S SCOPE OF WORK/GEN. COMMENTS
DECOR Company CMs to utilize the Company Regionalization Strategy. (Contact Justin Ashby for more information Both Company and Franchise projects should use Plymold for single brand LJS décor	**Custom Seating** Gordon Metcalf Phone: 800-223-7328 Fax: 918-682-4383 **Durability** John Gerelus Phone: 800-893-6040 Fax: 727-328-2678 **MSW** Mark Callihan Phone: 417-673-1901 Fax: 417-673-1853 **Plymold** Don Archibeque Phone: 800-759-6653 Fax: 800-544-0480	Varies	N/A	Distrib.	Distrib.	Drop	N/A	G.C.	G.C.	Owner /G.C.	Owner	**Material:** Chair Rails, Dining Room Wainscot, Window Sills, quilted stainless (where occurs). **Install:** Complete installation of owner supplied decor package including seating, tables, modular counter, que rails, trash enclosures, condiment counters and drink counter. Complete installation of GC sourced components including chair rails, dining room wainscot, window sills, and S.S. quilted wall panels (where occurs). All required core drills per vendor supplied layout. Coordinate alignment of ceiling hung items and core drilled fixtures such as tables and pendant lights (where occurs). Drill 2" holes in service counter for P.O.S.	**Material:** Modular front service counter, queue rails, sit down counter top, divider walls, trash and condiment enclosures, tables/bases, boothes and settees, dining room drink counter, site-specific core drill template/seating layout. **Install:** N/A	
Marmoleum Wainscot	**Forbo/Marmoleum** Donna Young phone: 800-342-0804 Ext 441 DonnaYoung@fil-na.com Acct. Number 130076	varies	N/A	G.C.	G.C.	Drop	N/A	G.C.	G.C.	G.C. /G.C.	G.C.	**Material:** Sheet marmoleum, adhesive, j-mould, latex wall primer. Wall must be straight and true prior to priming and direct glue application per drawings. **Install:** Complete installation of marmoleum as indicated in drawings and by manufacturer's written instructions.	**Material:** N/A **Install:** N/A	**General Notes:** Negotiated price is $1.40 sq. ft. for cut rolls. Complete roll contains 79" wide x 105' long (77 sq. yards or 693 sq. ft.). Roll price is $1.27 square ft.
FREESTANDING CHAIRS AND STOOLS	**MTS Seating** Laurie Prater (734) 847-3875 ext. 222	Varies	N/A	Distrib.	Distrib.	Drop	N/A	G.C.	G.C.	Owner /G.C.	Owner	**Material:** N/A **Install:** G.C. to receive and store freestanding chairs and stools, set in place after final cleanup.	**Material:** Freestanding chairs and stools **Install:** N/A	
DRINK PLATFORM - COKE (DRINK DISPENSER, LINE SETS) **L & LA concept only** *CONTACT DISTRIBUTOR FOR INFORMATION REGARDING ORDERING ICE/BEVERAGE SYSTEM	Coca-Cola North America (Coke) Phone: (800) 531-2238 x3778 Fax: 404-253-4049 Sentina L. Ahlstrom sahlstrom@na.ko.com	Cornelius ENDURO ED250 (8 valves) Cornelius ENDURO ED250 (8 valves)	S532 (Drive-Thru) S382 (Self-Serve)	Distrib.	Manuf.	Drop	N/A	Manuf. (Local Installer)	Coke	Coke / Coke	Coke	**Material:** Condenser curbs, conduit, and conductors as described in drawings **Install:** (2) Drink Machine Tables. Install tubing bundle prior to installation of ceiling tile. Pipe hoods at remote condensers. Cover any exposed lines with stainless steel shroud and/or pvc chase as shown in drawings.	**Material:** (2) Drink machines, syrup rack, carbonators, bundled tubing, ice machine adapter plates, drain/condensate lines. **Install:** Complete installation of drink machines, syrup rack, carbonators. Bundled Tubing: Connect water lines in tubing bundle to filter, syrup rack, and drink/ice equipment; Install back-flow device near drink units. Connect CO2 line in tubing bundle to carbonators and drive thru drink machine ice delivery system. Installation ice machine adapter plates. Complete installation of drain/condensate lines as indicated on drawings. Note: Coke to provide all other equipment and installation necessary for a complete installation. Start up and Test System.	Owner Scope: C.M. to coordinate work between drink platform Vendor / Suppliers and G.C. Both of the Manitowoc Ice Machines and associated condenser to be provided by Owner through the Distributor. Installation by G.C. General Comment: G.C. to install, Distributor supplied main building Water Filtering system.
(ICE MACHINES)	Manitowok Ice, Inc. Alicia Dillion Phone: 920/682-0161	QY0674C	S510	Distrib.	Manuf.	Drop	N/A	G.C or Local Installer	Manuf. (Local Installer)	Manuf / Manuf	Owner	**Material:** Condenser platform, conduit, conductors **Install:** G.C. to arrange, coordinate and schedule installation of Ice Machines after the Coke drink system is installed. Ice Machines are shipped to Local Installer, by Distributor at G.C. direction.	**Material:** Ice machine condensers, cubers and refrigerant lines. **Install:** Complete installation of system, startup and test.	General Comment: Distributor provides purchase orders to manufacturer for applicable Coke platform.
(WATER FILTER)	Selecto Scientific Delrinda Butler or Angela Dawson (800) 635-4017	TB5/620-5	S592	Distrib.	Manuf.	Drop	N/A	G.C.	G.C. - See Vendor Scope (Coke Drink Platform)	G.C. / G.C.	Owner	**Material:** Plumbing rough-ins for filter **Install:** Mount water filter on wall and connect to water supply line and all drink equipment.	**Material:** Water filter and cartridges **Install:** N/A	
DRINK PLATFORM - PEPSI (DRINK DISPENSER, LINE SETS) **K, KA, KL, KT and TL concepts (concept specific differences are noted)** *CONTACT DISTRIBUTOR FOR INFORMATION REGARDING ORDERING ICE/BEVERAGE SYSTEM	Pepsi Kim Semmes KFC and Multibrand Coordinator Phone: (502) 896-8650 Fax: (502) 893-4173 kim.semmes@pepsi.com Christine Trevino Taco Bell Coordinator Phone: 949-863-4352 Fax: 949-862-1063 christine.trevino@pepsi.com	Cornelius ED 250 (8 valves) Servend MD 250 (8 valves)	Varies	Distrib.	Manuf.	Drop	N/A	Manuf. (Local Installer)	Pepsi	Pepsi / Pepsi	Pepsi	**Material:** Condenser curbs, conduit, and conductors as described in drawings **Install:** (2) Drink Machine Tables. Install tubing bundle prior to installation of ceiling tile. Pipe hoods at remote condensers. Cover any exposed lines with stainless steel shroud and/or pvc chase as shown in drawings.	**Material:** (2) Drink machines, syrup rack, carbonators, bundled tubing, ice machine adapter plates, drain/condensate lines. **Install:** Complete installation of drink machines, syrup rack, carbonators. Bundled Tubing: Connect water lines in tubing bundle to filter, syrup rack, and drink/ice equipment; Install back-flow device near drink units. Connect CO2 line in tubing bundle to carbonators and drive thru drink machine ice delivery system. Install ice machine adapter plates. Complete installation of drain/condensate lines as indicated on drawings. Note: Pepsi to provide all other equipment and installation necessary for a complete installation. start up, test and calibration of drink system.	Owner Scope: C.M. to coordinate work between drink platform Vendor / Suppliers and G.C. General Comment: Distributor provides purchase orders to manufacturer for applicable Pepsi platform. On KA concepts only, one of the two Manitowok QY0674C Ice Machines and associated condenser to be purchased by the owner. Installation by local installer as with other drink platform items. On TL concepts only, both ice machines are purchased and installation paid for by the owner. Installation by a local installer is paid for at the time of order.
(ICE MACHINES)	Manitowok Ice, Inc. Alicia Dillion Phone: 920/682-0161	QY0674C QY1474C (where occurs)	S510 S511 (where occurs)	Distrib.	Manuf.	Drop	N/A	G.C.	Manuf. (Local Installer)	Pepsi	Pepsi (Owner pays for install of ice machines in TL)	**Material:** Condenser platform, conduit, conductors **Install:** G.C. to coordinate and schedule installation of Ice Machines with Pepsi drink system installer.	**Material:** Ice machine condensers, cubers and refrigerant lines. **Install:** Complete installation of system, startup and test.	
(WATER FILTER)	Selecto Scientific Delrinda Butler or Angela Dawson (800) 635-4017	MFS-620-5 (KL, K, KA TB5/620-5 (KT, T, TL)	S590 S592	Distrib.	Manuf.	Drop	N/A	G.C.	G.C. - See Vendor Scope (Pepsi Drink Platform)	Pepsi / G.C.	Pepsi	**Material:** Plumbing rough-ins for filter **Install:** G.C. to mount water filter on wall and connect to water supply line.	**Material:** Water filter and cartridges **Install:** N/A	
DRIVE-THRU COMMUNICATIONS (Changed from Headset Station)	HME Jennifer Cassidy Phone: (858)535-6092 or Kurt Hatch Phone: (909)481-3942 x6021 Fax: (858)552-0139	C11192	U001	Distrib.	Distrib.	Drop	N/A	Manuf. (Local Installer)	Manuf. (Local Installer)	Owner / Owner	Owner	Material: N/A Install: Provide outlets, J-Boxes, conduit and wiring for complete system including base station, headsets, battery charger; Provide outlets and wiring for battery chargers.	Material: Base station with message repeater, headsets, battery charger, loop detectors and conduit, and FCC License. Install: Base station with message repeater; Mount on wall; connect base station headset to loop detectors at speaker post loop, and speaker post. Adjust system for volume and clarity.	General Comment: For the TL and LA concepts the HME communication system also includes a drive-thru timer and display.

Vincent+Murphy Incorporated
637 Fifth Avenue
San Rafael, Ca. 94901
(415) 451-2500
FAX 451-2595

LICENSED ARCHITECT
HUGH EDWARD MURPHY
No. C17928
REN. 10/31/07
STATE OF CALIFORNIA

JOB NUMBER
H0510

SUBMITTALS

03/24/06 BLDG PC#1 SUBMITTAL

REVISIONS

CONTRACT DATE:
BUILDING TYPE: KA60-Y04
PLAN VERSION: JAN 05 D
SITE NUMBER:
STORE NUMBER:

KFC / A&W

3144 S. BASCOM AVENUE
SAN JOSE, CA. 95124-2022

All American Food

KA60-Y04

SCOPE OF WORK

SC-2

W:\Data\harman\2005\H0510_san jose_bascom\03_cd_current\100_YUM_Y04-SC-ALL.dwg modified by Dhanigan at Jun 26, 2006 - 3:50pm

SCOPE OF WORK

The Scope of Work sheets document how the Owner, GC, Vendor, and Distributor interact on items with shared responsibilities. The majority of this building is supplied and installed by the GC. Some items are supplied and installed by the owner. The scope of work covers the remaining items that are not as simple.

Definitions:
BOH - (Back of House) - The portion of the restaurant behind the service counter. Includes Service Counter, Kitchen and Support areas.
CONSOL. PKG. (Consolidated Package) - Multiple items combined into a single package and shipped to the destination by the Distributor.
C.M. - (Construction Manager) - Representative of Owner who manages construction.
DESTINATION - Location where an item is to be delivered. Example: the site; the G.C.'s warehouse, the Installer's shop, etc.
DIRECT - Items shipped directly from Supplier to destination - Ordered by Owner or G.C.
DISTRIB. (Distributor) - Example: N. Wasserstrom & Sons; PrimeSource; UFPC Equipment Sales Group.
DROP (Drop Shipped) - Items shipped directly from Supplier to destination - Ordered by Distributor.
FOH (Front of House) - The portion of the restaurant in front of the service counter. Includes Dining, Front Hall, and Restroom areas.
G.C. (General Contractor) - Items shipped / delivered to destination by General Contractor.
INSTALLED BY - Who has the responsibility for having an item installed at the site.
INSTALLER - Who physically installs an item at the site.
MANUF. (Manufacturer) - Manufacturer who fabricates, constructs, assembles an item.
ORDERED BY - Who has the responsibility to place the order of an item with the Supplier.
OWNER - Owner of the facility.
PACKAGE # - Which consolidated Distributor package an item is shipped in. See Consol. Pkg. definition.
PAID FOR BY - Who has the responsibility for final payment of an item and/or installation.
P.O. (Plan Owner) - YUM! Employee responsible for maintaining prototype documents.
R.A.P. (Regional Architect Partner) - YUM! Employee responsible for approval of site-specific projects.
RECEIVED BY - Who has the responsibility for receiving, signing for and storing an item at the destination.
SHIPPED BY - Who has the responsibility to coordinate shipping and delivery of the item to the site or to the destination.
SHIPPING METHOD - How an item gets to a site.
SUPPLIER - Who an item is purchased from. Example: a Manufacturer; an Equipment Consolidator, etc.
WARRANTY, MATERIAL / INSTALLATION - Who is responsible for warranty repairs during the warranty period.

ITEM DESCRIPTION & APPLICATION	NATIONAL SUPPLIER INFO.	MFR. #	A&E ITEM #	ORDERED BY	SHIPPED BY	SHIPPING METHOD	PACKAGE #	RECEIVED BY	INSTALLED BY	WARRANTY MATERIAL/INSTALL	PAID FOR BY	G.C. SCOPE OF WORK	VENDOR'S SCOPE OF WORK	OWNER'S SCOPE OF WORK/GEN. COMMENTS
Drive-Thru ERC SOS INTERFACE BOX KFC concepts only	ERC Tim Bailey Phone: (800)241-6880 Fax: (770)951-1875 Web: <www.erconline.com> Email: tbailey@erconline.com	#917-2 Dual Output Detector DTT-KFCNT network version New Store Package Display Unit #850 TM-05	S250 S200 S251	Distrib.	Vendor	Drop	N/A	Manuf. (Local Installer)	Manuf. (Local Installer)	Vendor/Manuf. for 2 yrs parts & labor	Owner	Material: Conduit, Outlet, J-Boxes Install: Contractor to install conduit, J-Boxes, and power outlets per construction documents.	Material: Interface Box, Ethernet cable and power supply Install: Complete Installation, Labor & Testing. To be installed after HME and POS installation are complete.	P.O.S. implementation to call ERC to schedule D.T. timer installation to immediately follow P.O.S. installation. CM coordinators to add Becky Goings from ERC to groundbreak notice distribution (goings@ERConline.com)
LOOP SENSORS (@ Drive Thru)	Panasonic	WX8172	N/A	Distrib.	Distrib.	Drop	N/A	G.C.	G.C.	Owner /G.C.	Owner	Material: Conduit and Wiring. Install: Complete installation of loop sensors and conduit in concrete pads as indicated in civil drawings. Loops must be labeled "Speaker Post Loop" and "Front Window".	Material: Loop Sensors. Install: N/A	
DRIVE THRU WINDOW	Quickserv (MCE Systems Inc.) Phone: (800) 388-8307 Fax: (713) 849-5708	SC-4030BR	B140	Distrib.	Distrib.	Drop	N/A	G.C.	G.C.	See General Comments	See General Comments	**Material:** G.C. to supply storefront metal and glazing surrounding d/t window. **Install:** G.C. to install Owner provided D/T windows and G.C. provided storefront metal and glazing.	**Material:** Drive-thru window **Install:** N/A	**General Comment:** Owner provides warranty on D/T window material. G.C. provides warranty on D/T window installation. See "Air Curtains" for further information.
FIRE SUPPRESSION SYSTEM (& ACCESSORIES)	Ansul Troy Hassman (502) 231-8147	N/A		G.C.	G.C.	Direct	N/A	G.C.	G.C. (Local Installer)	G.C. / G.C.	G.C.	Material: By Local Installer. Install: Fire Suppression System must be compatible with specified hoods. Hoods are pre-piped by manufacturer. Tanks, connections & heads by local installer contracted by G.C. G.C. to provide water to fire suppression system (if Piranha). See Plumbing Sheets. See General Comments at right for design intent.	Material: N/A Install: N/A	**Design Intent:** Upon activation of any hood fire extinguishing system, the makeup air fan shall be de-energized. Hood Exhaust Fans and Roof Top Units shall remain running. Upon activation RTU smoke detector its respective rooftop unit shall be de-energized. See sheet E6.0, Detail 2 for interlock diagram.
HAND SINKS	**Advance Tabco** Dee Chilton Phone: (800) 832-1218 Craig Cooper Phone: (800) 645-3166 Fax: (516) 242-6900	7-YUM-20	N050	Distrib.	Distrib.	Consol. Pkg.	1	G.C.	G.C.	Owner /G.C.	Owner	Material: G.C. to provide braided piping for supply lines. Install: Complete installation of Owner supplied materials.	Material: Supply handsink, faucet and foot valves. Install: N/A	**General Comment:** Splashguards to meet code requirements supplied and installed by G.C. See details.
HOODS	**General Ventilation - Preferred Supplier** Buck Seward Phone: (800) 474-0037 ext. 105 Cell: (256) 714-4992 bseward@generalventilation.com **Gaylord Industries - Preferred Supplier (Broiler Hood)** Mark Curran Phone: (800) 547-9696 Fax: (503) 692-8048 markc@gaylordusa.com **Randell - Alt.Supplier** Mark DeLorenzo Phone: (800) 821-8580 x6458 Fax: (517) 644-4224 markd@randell.com	VARIES	VARIES	Distrib.	Distrib.	Drop	N/A	G.C.	G.C.	Owner /G.C.	Owner	**Material:** Exhaust Duct, Duct Fireproofing as required by code, relays for hood fan interlock circuit. Provide all other materials for complete installation. **Install:** Install hood, duct, duct fireproofing, insulated stainless steel panels, and all other materials for complete installation. Supply, assemble and install exhaust fan interlock per 2/E6.0	**Material:** Hood pre-piped for fire suppression, exhaust fans w/ insulated steel curbs, louvered steel extensions and hinged base. Stainless steel panel per plans. **Install:** N/A	**General Comment:** G.C. responsible for all inspections.
HVAC (RTU/CURBS)	TRANE Marty Cusick or Chad Sanders Phone: (866) YUM-HVAC or (866) 986-4822 Fax: (502) 499-7870 Cell: (502) 558-4879 mjcusick@trane.com	Varies	N/A	G.C.	G.C.	Direct	N/A	G.C.	G.C.	G.C. / G.C.	G.C.	Material: Purchase RTUs (with factory installed un-powered convenience outlets and HACR circuit breaker), knock-down curbs, and thermostats from Trane using national account pricing. Provide ductwork, smoke detectors, conduit to rooftop units and any other materials required for a complete HVAC system. Install: All HVAC equipment. G.C. to coordinate Owner's T&B (Test & Balance) consultant including scheduling of T&B prior to turnover using YUM! scope of T&B services and YUM! format. Owner to pay for initial T&B only.	Material: N/A Install: N/A	General Comments: G.C. to follow Mechanical Engineered design per the drawings, provide ductwork, and report any discrepancies to Owner ASAP. G.C. shall not deviate from design intent. G.C. to pay for subsequent T&B necessary to verify corrections required by initial T&B. Owner's Scope: Provide C.M. with YUM! Scope and Format for Test and Balance (T&B) services. C.M. to inform R.A.P. of Reoccurring Issues on T&B Reports, R.A.P. to copy P.O. Owner to pay for initial T&B.
KITCHEN EQUIPMENT (INTERIOR)	Varies	Varies	Varies	Distrib.	Distrib.	Consol. Pkg.	1	G.C.	G.C. (See General Comments)	Owner /G.C.	Owner	All Equipment: G.C. Responsible for All Receiving, Inventory, Offloading, Installation, Rough-In Connections, Final Utility Connections / Inspections. G.C. to coordinate calibration and testing of kitchen equipment with local vendors as applicable.	Shelving: Supplier to Provide All Components for Each Assembly Bundled Together in Clearly Marked Packaging. Provide Clear Assembly Instructions Including Isometric Drawing of Final Assembly.	General Comment: See "Hoods" and "Walk-In Cooler" for Additional Kitchen Equipment Information.
(SHELVING / WORKSTATIONS)	ISS Jackie Moore Phone: (770) 787-9830 ext. 281	Varies	Varies	Distrib.	Distrib.	Consol. pkg.	1	G.C.	G.C.	Owner /G.C.	Owner	Shelving / Workstations: G.C. to assemble per supplier's instructions and install per plans.	Shelving: Supplier to Provide All Components for Each Assembly Bundled Together in Clearly Marked Packaging. Provide Clear Assembly Instructions Including Isometric Drawing of Final Assembly.	
LIGHTING (INTERIOR / BLDG EXTERIOR)	Accuserv Buddy Bockweg and Charlie Jacobs Phone: (877) 707-7378 Fax (502) 961-0357	Varies	N/A	Distrib.	Distrib.	Drop	N/A	G.C.	G.C.	Owner /G.C.	Owner	Material: N/A Install: G.C. to Install Owner Provided Fixtures, Lamps. G.C. responsible for all Labor, Conduit, Connectors and Conductors for a complete installation.	Material: Supplier to Provide Fixtures and Lamps. Contactors for lighting control relays. Install: N/A	
LIGHTING (SITE)	Accuserv Buddy Bockweg and Charlie Jacobs Phone: (877) 707-7378 Fax (502) 961-0357	Varies	N/A	Distrib.	Distrib.	Drop	N/A	G.C.	G.C.	Owner /G.C.	Owner	Material: Provide Foundations, Conduit, and Conductors. Install: G.C. to install Owner provided Light Poles, Fixtures, Brackets, Lamps, Anchor Bolts, Conduits & Conductors. Provide excavations, and concrete foundations at locations noted on photometric drawing, assemble and install per plans.	Material: Supplier Responsible for Photometric Drawings, Anchor Bolts / Template, Poles, Brackets, Fixtures and Lamps per Drawings and Specifications. Install: N/A	
LIGHTING (EXTERIOR LIGHTING CONTROL PANEL)	WattStopper Randi Simmers Phone: (800) 927-9287 ext. 241 Fax (972) 422-1311 www.wattstopper.com	DU3670L52VED	N/A	Distrib.	Distrib.	Drop	N/A	G.C.	G.C.	Owner /G.C.	Owner	Material: Conductors, conduit, over-ride switches as detailed, and any items required to provide a complete installation. Install: Lighting contactors, relays and photocell; Connect contactors to appropriate circuits and fixtures; install over-ride switches as detailed.	Material: Exterior lighting control panel with contactors and photocell Install: N/A	**General Comment:** The WattStopper panel is included in the AccuServe lighting package.

Vincent+Murphy Incorporated
637 Fifth Avenue
San Rafael, Ca. 94901
(415) 451-2500
FAX 451-2595

LICENSED ARCHITECT
RICHARD EDWARD MURPHY
No. C17928
REN. 10/31/07
STATE OF CALIFORNIA

JOB NUMBER
H0510

SUBMITTALS
03/24/06 BLDG PC#1 SUBMITTAL

REVISIONS

CONTRACT DATE:
BUILDING TYPE: KA60-Y04
PLAN VERSION: JAN 05 D
SITE NUMBER:
STORE NUMBER:

KFC / A&W
3144 S. BASCOM AVENUE
SAN JOSE, CA. 95124-2022

KA60-Y04

SCOPE OF WORK

SC-3

W:\Data\karmen\2005\H0510_san jose_bascom\03_cd_current\100_YUM_Y04-SC-ALL.dwg modified by Dhamigan at Jun 26, 2006 - 3:50pm

SCOPE OF WORK

The Scope of Work sheets document how the Owner, GC, Vendor, and Distributor interact on items with shared responsibilities. The majority of this building is supplied and installed by the GC. Some items are supplied and installed by the owner. The scope of work covers the remaining items that are not as simple.

Definitions:

BOH - (Back of House) - The portion of the restaurant behind the service counter. Includes Service Counter, Kitchen and Support areas.
CONSOL. PKG. (Consolidated Package) - Multiple items combined into a single package and shipped to the destination by the Distributor.
C.M. - (Construction Manager) - Representative of Owner who manages construction.
DESTINATION - Location where an item is to be delivered. Example: the site; the G.C.'s warehouse, the Installer's shop, etc.
DIRECT - Items shipped directly from Supplier to destination - Ordered by Owner or G.C.
DISTRIB. (Distributor) - Example: N. Wasserstrom & Sons; PrimeSource; UFPC Equipment Sales Group.
DROP (Drop Shipped) - Items shipped directly from Supplier to destination - Ordered by Distributor.
FOH (Front of House) - The portion of the restaurant in front of the service counter. Includes Dining, Front Hall, and Restroom areas.
G.C. (General Contractor) - Items shipped / delivered to destination by General Contractor.
INSTALLED BY - Who has the responsibility for having an item installed at the site.
INSTALLER - Who physically installs an item at the site.
MANUF. (Manufacturer) - Manufacturer who fabricates, constructs, assembles an item.
ORDERED BY - Who has the responsibility to place the order of an item with the Supplier.
OWNER - Owner of the facility.
PACKAGE # - Which consolidated Distributor package an item is shipped in. See Consol. Pkg. definition.
PAID FOR BY - Who has the responsibility for final payment of an item and/or installation.
P.O. (Plan Owner) - YUM! Employee responsible for maintaining prototype documents.
R.A.P. (Regional Architect Partner) - YUM! Employee responsible for approval of site-specific projects.
RECEIVED BY - Who has the responsibility for receiving, signing for and storing an item at the destination.
SHIPPED BY - Who has the responsibility to coordinate shipping and delivery of the item to the site or to the destination.
SHIPPING METHOD - How an item gets to a site.
SUPPLIER - Who an item is purchased from. Example: a Manufacturer; an Equipment Consolidator, etc.
WARRANTY, MATERIAL / INSTALLATION - Who is responsible for warranty repairs during the warranty period.

ITEM DESCRIPTION & APPLICATION	NATIONAL SUPPLIER INFO.	MFR. #	A&E ITEM #	ORDERED BY	SHIPPED BY	SHIPPING METHOD	PACKAGE #	RECEIVED BY	INSTALLED BY	WARRANTY MATERIAL/INSTALL	PAID FOR BY	G.C. SCOPE OF WORK	VENDOR'S SCOPE OF WORK	OWNER'S SCOPE OF WORK/GEN. COMMENTS
MAPS LINE K, KA, KL & LA concepts	**APW** Jeff Calahan ext. 6282 - Kenny Gross Phone: (800) 752-0663 Fax: (307) 637-8071	VARIES	VARIES	Distrib.	Distrib.	Drop	N/A	G.C.	G.C.	Owner /G.C.	Owner	Material: Provide all electrical conduits, conductors and connectors necessary for installation; all plumbing and ductwork necessary for installation. Install: Complete installation of Modular Assembly Pack Station including assembly and final electrical/ plumbing connections per mfg. instructions. Installation of outlets along upper and lower raceway for external equipment located on line. Installation of drain line(s) to drain. Mounting of POS bump bars and monitor brackets as req'd. Installation of packaging bins and dispensers. Installation of exhaust hood and ductwork. Start-up.	Material: Supplier to ship complete package including installation and operating instructions manual. Install: POS installer will mount and connect POS bump bars and monitors.	**When the vendor receives a PO from the equipment distributor the vendor shall contact the installer who will arrange a time with the GC's superintendent for delivery and start-up.**
T, TL, KT concepts	**Delfield** Don Alwood Phone: (800) 334-0718 Fax: 989-773-2060	VARIES	VARIES	Distrib.	Distrib.	Drop	N/A	G.C.	G.C./ Manuf. (Local Installer)	Owner/ Owner	Owner	Material: All electrical conduits, conductors and connectors necessary to the point of connection; all plumbing necessary to the point of connection. Provide duct to exhaust hood. Install: Off load and install MAPS line as shown in plans and as described in the Delfield MAPS Service, Installation and Operations Manual. Connect 200 Amp electrical service to MAPS line service panel. Connect water supply lines to MAPS line. Run and connect drain line in chase to drain. Connect duct to exhaust hood. Mounting of POS bump bars and monitor brackets.	Material: Ship complete package including Service, Installation and Operations Manual. Install: POS installer will mount and connect POS bump bars and monitors. MAPS line vendor to perform start-up.	G.C. shall verify all circuits serving POS equipment complies with 14/E3.1 (T and TL only) G.C. sends the vendor a signed site prep form stating that the site is ready for start-up (1-2 week lead-time required.)
	Carter Hofman Jim Wallace Phone: (800) 323-9793	VARIES	VARIES	Distrib.	Distrib.	Drop	N/A	G.C.	G.C.	Owner /G.C.	Owner	Material: Provide all electrical conduits, conductors and connectors necessary for installation; all plumbing and ductwork necessary for installation. Install: Complete installation of Modular Assembly Pack Station including assembly and final electrical/ plumbing connections per mfg. instructions. Installation of outlets along upper and lower raceway for external equipment on line. Installation of drain line(s) to drain. Mounting of POS bump bars and monitor brackets as req'd. Installation of packaging bins and dispensers. Start-up.	Material: Supplier to ship complete package including installation and operating instructions manual. Install: POS installer will mount and connect POS bump bars and monitors.	
MUSIC SYSTEM	**Musak** Cindy McCrain Phone: (803) 396-3032 Fax: (803) 396-3074 Email: cindymc@muzak.com	N/A	F131	Owner	Manuf.	Direct	N/A	Manuf. (Local Installer)	Manuf. (Local Installer)	Owner / Owner	Owner	**Material:** J-Boxes, Conduit, Phone and Electrical Wiring. **Install:** J-Boxes, Conduit, Phone and Electrical Wiring per plans. NOTE: Because the DBS dish is sled mounted the GC scope includes no work on the roof.	**Material:** Sled mounted DBS antenna, satellite receiver, digital amp, speakers with grilles(4-interior, 2-exterior (A&W concepts only), speaker wire, coaxial, hardware per national contract. Speakers to be black in open ceiling areas, white in dropped ceilings. **Install:** Complete installation of entire music system. Pre-wire prior to ceiling installation. Provide testing and calibration of entire system to national decibel standards for office volume control. Wire system per national contract wiring diagram. The following for A&W concepts only: complete jukebox setup and interface connection, CD installation in jukebox per national contract. CDs shipped inside jukebox cabinet. Do not leave jukebox key in store, label keys with jukebox serial number and file in local Muzak office. Music to be set to 50s/60s music or custom programming per national contract. Sleds to be placed on 1/4" to 1/2" asphaltic mat, ballast to be secured to sled, no penetrations through roof membrane allowed.	**General Comments:** G.C. is responsible for coordination of installation of entire music system including coordination with local Muzak installer. This includes the jukebox in A&W concepts. C.M. to verify Owner's responsibility for ordering Music System from local Muzak contact; Muzak shall be notified at Ground Break to coordinate installation date.
JUKE BOX KA and LA	Rock-Ola Manufacturing Corp. (310) 328-1306, Jennifer Claton ext. 113 or Kelly Sepulbeda x123	Rock-Ola Bubbler w/ A&W 100CD Package	F150	Distrib.	Distrib.	Drop	N/A	G.C.	Local Installer	Owner / Owner	Owner	Material: Conduit, J-boxes, Muzak interface conduit, telephone jack. Install: Install J-boxes and conduit for interior and exterior speakers. Set juke box as indicated after final clean-up, but prior to install and configuration by Muzak.	Material: **Rock-Ola Bubbler juke box with A&W 100 CD package. CDs secured inside juke box for shipping.** Install: See "Music" section for installation information.	General Comment: CD package programmed and labeled. CD's installed by Muzak local installer.
L concept	**Musak** Cindy McCrain Phone: (803) 396-3032 (see above for more contact info.)	Rowe w/ LJS 100CD Package	F151										Material: **Rowe juke box with A&W 100 CD package. CDs secured inside juke box for shipping.** Install: See "Music" section for installation information.	
OCB	**Delphi** (Standard for CO & Franch) Tom Rock - Tech. Service Dept. Phone: (800) 456-0060 ext. 476 Marlene Gelb - Installation Coord. Phone: (800) 456-0060 ext. 452 **Texas Digital** (Optional for TB Franch. only) Technical Service Dept. Ph: (972) 693-9378	Delphi #15E Texas Digital Accu-view 150 LCD	S240	Distrib.	Distrib.	Drop	N/A	GC	See GC & Supplier Scope of Work Notes	Material - Owner Install - GC/3rd Party	Owner GC See GC & Supplier Scope of Work Notes	**Material:** Provide everything the vendor does not provide to complete the OCB installation including but not limited to the footing and anchor bolts, conduits and power conductors. **Install:** OCB footing per civil engineering details. Place anchor bolts as directed by Vendor. Place all power and data conduits, pull power conductors per plans. Install OCB pedestal/ speaker post. Make ready for final power connections and pulling data cables.	**Material:** Order Confirmation Board. For Taco Bell only provide Data Switch, Serial Cable/s and Adapters. Speaker and Microphone is supplied by HME. **Install:** Order Confirmation Board. For Taco Bell only install Data Switch in Manager's Office, pull Serial Cables with Adapters. Start-up and test OCB. Train RGM. Speaker and Microphone is installed by HME. Note: Delphi will provide "Pre-Installation Site Preperation Requirements"	The OCB is similar to the previous speaker posts. The Speaker and Microphone will be installed by HME, after the OCB / Speaker Post has been installed and permanent power has been connected to the OCB. The HME Speaker and Microphone shall have a separate conduit for audio wires. See plans.
(Drive-Thru Speaker and Microphone)	**HME** (Spkr. & Mic) Technical Service Dept. PH. (800) 848-4468 Opt. 3)			Distrib.	Distrib.	Drop	N/A	Manuf. (Local Installer)	Manuf. (Local Installer)	Owner	Owner	**Material:** Conduit from Pick-up window to OCB. **Install:** N/A	**Material:** Speaker and Microphone. **Install:** Speaker and Microphone. Pull communication wires to OCB.	
PRICE CONFIRMATION BOARD (P.C.B.) T & TL concepts only	**Everbrite, Inc.** Annia Dominguez (Sales and General) (800) 558-3888 x140 adominguez@everbrite.com Technical Support: (888) 877-3092	E00687S	L-200	Distrib.	Distrib.*	Drop*	N/A	G.C.	G.C.	Owner/ Owner	Owner	Material: Supply all j-boxes, conduit, pull-strings and electrical circuits/ receptacles. Install: All supplied items plus data cables, cut hole in counter top for power and data cables. Install power pack.	Material: Wedge mount display, power pack, data cable and mounting bolts. Install: PAR to make final connection to PAR register system.	**"Ground-Break Notice" to be issued to distributor who will arrange for drop ship to site.** *** Prime Source stocks PCB and will ship as part of the consolidated pkg.**
P.O.S (Point of Sale Pkg.) T & TL concepts only	**PAR** Order Installation: Kelly Munlente Ph: 800-245-9446 x526 Miscellaneous Issues: Carolina Saravia Ph: 949-863-3656 Fax: 949-863-4530 Csaravia@tacobell.com Christine Greiner Ph: 949-863-3815 Fax: 949-863-4530 Cgreiner@tacobell.com Help desk: Ph: 800-SOS-TACO Option "1"	NA	U-072 U-101 U-120 U-150 U-200 U-240 U-261	Owner (Material through Distributor)	Manuf. (YUM!)	Direct	N/A	Manuf. (Local installer)	Manuf. (Local Installer)	Owner / Owner	Owner	**Material:** Supply all J-Boxes, Conduit, Pullstrings and Electrical Outlets. **Install:** **POS/Order entry terminals**; Provide holes for order entry terminals; provide J-Box, I.G. power and conduits as noted on drawings. Monitors Provide J-Box, I.G. power and conduits as noted on drawings. **Brackets for monitors**; Complete installation of monitor brackets and provide blocking/support. **Bump Pads**; Install conduit/J-Box, I.G. outlet, conduit and wiring as noted on drawings. **Cash Register**; Provide J-Box, I.G. outlet, conduit and wiring as noted on drawings. **Receipt Printers**; Provide J-Box, I.G. outlet, conduit and wiring as noted on drawings. **Com Wiring**; Provide I.G. power, J-Boxes, conduit and wiring as noted on drawings. **Coordination:** G.C. to coordinate scheduling so that permanent power is on prior to installation of "Telephone Communications", which must also be active prior to installation of POS system. G.C. is responsible for reviewing the PAR "Pre-install Guideline" (provided by CM) to verify that the building is ready for POS installation. If G.C. confirms building is ready and the POS installer finds incomplete items the G.C. will be charged for the installer's return trip.	**Material:** Supply all system components and materials necessary for a complete installation including the HME Timer/ TACO interface cable. **Pre-install: Site Specific Plan;** PAR reviews site specific plan sheets for compliance with PAR and alerts CM of inconsistencies. **Purchase;** PAR notifies CM prior to making changes to the purchase order. **Pre-install Checklist;** PAR contacts superintendant to confirm install date and reviews pre-install checklist. **Install:** (Note: PAR must preform their install after the HME Timer install is complete.) **Monitors;** Complete install. of all monitors after GC's work is completed. **Video Controllers**; Complete installation of controllers after GC's work is completed. **Bump Pads**; Installation of bump pad/wiring comn. after GC's work is completed. **Cash Registers**; Installation of cash registers after GC's work is completed. **Receipt Printers**; Installation of receipt printers after GC's work is completed. **Wiring & Connectors**; Pull communications wiring to POS components. Complete final POS equipment connections and software start-up. **TACO Computer;** Complete installation of computer and components, install interface cable between HME Timer and TACO computer. **Power Cords;** Complete installation of power cords after GC's work is completed. **Coordination:** PAR to call the HELP DESK at the completion of POS Installation for system verification. PAR performs ECOS/"Sure Test" on electrical system. PAR completes "Job Status Form" at time of each site visit and leaves a signed copy with GC and e-mails the CM a copy.	**Design Intent:** Owner provides wiring diagram if different from drawings. See "Telephone Communications" for more information. **Critical Flow Chart:** Permanent Power Available --> Telephone Lines Active --> Pre-install Checklist --> HME Timer Installed P.O.S. Installation.

Vincent+Murphy Incorporated
637 Fifth Avenue
San Rafael, Ca. 94901
(415) 451-2500
FAX 451-2595

LICENSED ARCHITECT — HUGH EDWARD MURPHY — C.No. C17928 — EXP. 10/31/07 — STATE OF CALIFORNIA

JOB NUMBER
H0510

SUBMITTALS

03/24/06 BLD'G PC#1 SUBMITTAL

REVISIONS

CONTRACT DATE:
BUILDING TYPE: KA60-Y04
PLAN VERSION: JAN 05 D
SITE NUMBER:
STORE NUMBER:

KFC / A&W

3144 S. BASCOM AVENUE
SAN JOSE, CA 95124-2022

KA60-Y04

SCOPE OF WORK

SC-4

W:\Data\hermon\2005\H0510_san jose_bascom\03_cd_current\100_YUM_\04-SC-ALL.dwg modified by thomsgan at Jun 26, 2006 - 3:50pm

SCOPE OF WORK

The Scope of Work sheets document how the Owner, GC, Vendor, and Distributor interact on items with shared responsibilities. The majority of this building is supplied and installed by the GC. Some items are supplied and installed by the owner. The scope of work covers the remaining items that are not as simple.

Definitions:

BOH - (Back of House) - The portion of the restaurant behind the service counter. Includes Service Counter, Kitchen and Support areas.
CONSOL. PKG. (Consolidated Package) - Multiple items combined into a single package and shipped to the destination by the Distributor.
C.M. - (Construction Manager) - Representative of Owner who manages construction.
DESTINATION - Location where an item is to be delivered. Example: the site; the G.C.'s warehouse, the Installer's shop, etc.
DIRECT - Items shipped directly from Supplier to destination - Ordered by Owner or G.C.
DISTRIB. (Distributor) - Example: N. Wasserstrom & Sons; PrimeSource; UFPC Equipment Sales Group.
DROP (Drop Shipped) - Items shipped directly from Supplier to destination - Ordered by Distributor.
FOH (Front of House) - The portion of the restaurant in front of the service counter. Includes Dining, Front Hall, and Restroom areas.
G.C. (General Contractor) - Items shipped / delivered to destination by General Contractor.
INSTALLED BY - Who has the responsibility for having an item installed at the site.
INSTALLER - Who physically installs an item at the site.
MANUF. (Manufacturer) - Manufacturer who fabricates, constructs, assembles an item.
ORDERED BY - Who has the responsibility to place the order of an item with the Supplier.
OWNER - Owner of the facility.
PACKAGE # - Which consolidated Distributor package an item is shipped in. See Consol. Pkg. definition.
PAID FOR BY - Who has the responsibility for final payment of an item and/or installation.
P.O. (Plan Owner) - YUM! Employee responsible for maintaining prototype documents.
R.A.P. (Regional Architect Partner) - YUM! Employee responsible for approval of site-specific projects.
RECEIVED BY - Who has the responsibility for receiving, signing for and storing an item at the destination.
SHIPPED BY - Who has the responsibility to coordinate shipping and delivery of the item to the site or to the destination.
SHIPPING METHOD - How an item gets to a site.
SUPPLIER - Who an item is purchased from. Example: a Manufacturer; an Equipment Consolidator, etc.
WARRANTY, MATERIAL / INSTALLATION - Who is responsible for warranty repairs during the warranty period.

ITEM DESCRIPTION & APPLICATION	NATIONAL SUPPLIER INFO.	MFR. #	A&E ITEM #	ORDERED BY	SHIPPED BY	SHIPPING METHOD	PACKAGE #	RECEIVED BY	INSTALLED BY	WARRANTY MATERIAL/INSTALL	PAID FOR BY	G.C. SCOPE OF WORK	VENDOR'S SCOPE OF WORK	OWNER'S SCOPE OF WORK/GEN. COMMENTS
P.O.S (Point of Sale Pkg.) K, KA, KL, KT concepts only L, LA concepts only	**YUM! POS Implementation** Zack Coblens Phone: (800) 544-5774 ext. x6956 Fax: (502) 874-8099 zack.coblens@yum.com Kevin Pfaffinger phone: 800-544-5774 ext. 6539 Fax: 502-874-8099 kevin.pfaffinger@yum.com	Varies	U100	Owner	Manuf. (YUM!)	Direct	N/A	Manuf. (Local Installer)	Manuf. (Local Installer)	Owner / Owner	Owner	Material: Supply all J-Boxes, Conduit, Pullstrings and Electrical Outlets. Install: POS/Order entry terminals; Provide holes in counters for order entry terminals; provide J-Box, I.G. power and conduits as noted on drawings. Monitors Provide J-Box, I.G. power and conduits as noted on drawings. Brackets for monitors; Complete installation of monitor brackets. Provide blocking/support as required. Computers; Provide J-Box, I.G. outlet, conduit and wiring as noted on drawings. Receipt Printers; Provide J-Box, I.G. outlet , conduit and wiring as noted on drawings. Data wiring cabinet; Provide blocking in the wall, J-Box, I.G. outlet, phone conduit. Manager's Office P.C. server (includes computer, printer, keyboard, monitor, UPS, power cords and low voltage/ com wiring; Provide I.G. power J-Boxes, conduit and wiring as noted on drawings. Com Wiring; Provide I.G. power, J-Boxes, conduit and wiring as noted on drawings. Scheduling: G.C. to coordinate scheduling so that permanent power is active prior to installation of "Telephone System". Telephone System must be active prior to installation of P.O.S.	Material: Supply and coordinate all system components and materials necessary for a complete installation except that which is provided or coordinated by G.C. Install: Monitors; Complete installation of all monitors. Video Controllers; Complete installation of video controllers. Bump Bars / Pads; Complete installation of bump pad/wiring connection. Computers; Complete installation of computer systems. Receipt Printers; Complete installation of receipt printers. Datatechy; Pull communications wiring to POS components final POS equipment connections and software start-up, data cabinet, install office server and components	**Design Intent:** Owner provides wiring diagram if different from drawings. See "Telephone Communications" for more information. **Critical Flow Chart:** Permanent Power Available - -> Telephone Lines Active -->> Pre-installation Survey -->> P.O.S. Installation.
RESTROOM ACCESSORIES	Varies	Varies	B240, B265, B280, B290 B300, B305, B400, B405	Distrib.	Distrib.	Consol. Pkg.	1	G.C.	G.C.	Owner / G.C.	Owner	**Material:** Blocking as noted in drawings and required. **Install:** All Owner provided Restroom Accessories.	Material: Restroom Accessories Install: N/A	**Notes:** K and KT concepts replace the paper towel dispenser in the restrooms (B-290)with an electric hand dryer (B-235).
ROOT BEER SYSTEM (Bag-N-Box) KA and LA concepts only	Cardinal Ice Glenn Faust 3311 Gilmore Industrial Blvd. Louisville, KY. 40213 Phone: 800-467-0448 Fax: 502-966-4098 e-mail: glenn@iceguys.com	300300B	S555	Distrib.	Distrib.	Drop	N/A	G.C.	Manuf.	Owner / Manuf.	Owner	Material: Conduit chases, J-boxes, all utility lines. Install: Conduit chases, J-boxes, all utility lines. G.C. to coordinate installation with Multiplex. G.C. responsible for receiving, inventory, offloading and setting in place.	Material: N/A Install: Soda syrup connection, run and test system, make adjustments as needed.	IMPORTANT **General Comments:** Cola upplier must install their equipment first. Syrup must be at the store for both A&W regular and diet root beer. The utilities (water, waste & electric lines) have to be connected.
MAKE YOUR OWN ROOT BEER PACKAGE (Optional) KA and LA concepts only	Cardinal Ice Glenn Faust 3311 Gilmore Industrial Blvd. Louisville, KY. 40213 Phone: 800-467-0448 Fax: 502-966-4098 e-mail: glenn@iceguys.com	Varies	N/A	Distrib.	Distrib.	Drop	N/A	G.C.	Manuf.	Owner / Manuf.	Owner	Material: Conduit chases, J-boxes, all utility lines. Install: Conduit chases, J-boxes, all utility lines. G.C. to coordinate installation with Multiplex. G.C. responsible for receiving, inventory, offloading and setting in place.	Material: N/A Install: Soda syrup connection, run and test system, make adjustments as needed.	IMPORTANT **General Comments:** Cola upplier must install their equipment first. Syrup must be at the store for both A&W regular and diet root beer. The utilities (water, waste & electric lines) have to be connected.
SAFE	**NKL (Fire King)** Dave Leedy Phone: (800) 528-9900 x1695 Fax: (800) 227-7513	Varies	Varies	Distrib.	Distrib.	Drop	N/A	Manuf. (Local Installer)	Manuf. (Local Installer) See General Comment	Owner / Owner	Owner	Material: Outlets, Conduit and Conductors. 5/8" cement board per safe pedestal detail. Install: Outlet, Conduit and Conductors and Safe pedestal per plan detail. G.C. to schedule installation with NKL and YUM! Loss Prevention after permanent power is available.	Material: Anchor Bolts, Safe. Install: Safe; set safe and secure, finalize electrical connections	General Comment: G.C. to provide telephone jack if safe requires security connection (telephone).
SECURITY SYSTEM	ADT Ralph Mertz Phone: 800-848-2872 x2773 Fax: 614-492-2556 rmertz@adt.com	Varies	Varies	Distrib.	Distrib.	Drop	N/A	Manuf. (Local Installer)	Manuf. (Local Installer)	Owner / Owner	Owner	Material: Outlets and J-Boxes with conduit (power/pull strings/phone) per location and sizes noted on drawings; phone jack RS31X for security system Install: Outlets and J-Boxes with conduit (power/pull strings/phone) per locations and sizes noted on drawings; phone jack RS31X for security system; Complete installation of outlets and J-Boxes with conduit (power/pull strings/phone) per locations and sizes noted on drawings; phone jack RS31X for security system. G.C. to provide assistance to supplier in installation of holdup buttons as directed by supplier.	**Material:** Alarm device for rear/kitchen door, door contactors, motion detectors with mounting brackets, alarm siren, strobe, hold up buttons, security panel, security key pad. **Install:** Alarm device for rear/kitchen door; Complete installation of devices as noted on plan Door Contactors; Connect devices to panel (power/communication/phone) Motion Detectors with mounting brackets; mount panel as noted and connect to power/phone Alarm Siren; Complete installation of alarm siren Strobe; Complete installation of strobe Hold Up Buttons; Compete installation of hold up buttons Security Panel; Complete installation of security panel Security Keypad; Complete installation of security keypad. Note: Supplier to provide for pre-wiring of system prior to ceiling tile installation.	General Comments: Owner to provide phone jack. No surface mounted conduit and/or wiring will be permitted unless otherwise noted - coordinate wiring prior to closing in walls.
SIGNS (Exterior Bldg. Signs / Road Signs / Directional Signs)	**Cummings Signs** Terry Dorgan Phone: 614-895-2240 Fax: 614-901-0829 **Everbrite** Ana Dominguez Phone: 414-529-7650 Fax: 414-529-7191 **Zimmerman Signs** Mike Coppinger Phone: 800-888-1327 Fax: 903-535-7401	Varies	N/A	C.M.	Manuf.	Drop	N/A	Manuf. (Local Installer)	Manuf. (Local Installer)	Owner / Owner	Owner	**Material:** J-Boxes,Conduit, Conductors and Miscellaneous listed below. **Install:** Install J-Boxes, Conduit and Conductors as noted on drawings.: G.C. to provide complete installation of decorative base/shroud for any monument signs should they occur (Example: Decorative masonry shroud not connected to sign). Accessible Parking Signs: Install foundation as detailed in drawings.	**Material:** Exterior building signs, foundations / footings, pole/pylon sign, reader board and accessories, monument sign (optional), and directional signage. **Install:** Exterior Building Signage; Complete installation and electrical connections. Supplier responsible for acquiring signage permits unless otherwise noted. Pole/Pylon Sign, Reader Board and Accessories; Complete installation and electrical connections of signage. Complete installation of engineered foundations. Paint poles. Monument Sign (where occurs); Complete installation of monument sign and foundation excluding installation of a decorative shroud if applicable. Directional Signage; Complete installation and electrical connections of directional signage and foundation.	**General Comment:** **Directional Signs:** Corporate Directive - One (1) Directional Sign is standard
(Exterior Menuboard Housing and Preview Board)	Company CMs to utilize the Company Regionalization Strategy. (Contact Justin Ashby for more information	Varies	Varies	C.M.	Manuf.	Drop	N/A	G.C.	G.C.	Owner / G.C.	Owner	**Material:** J-Boxes,Conduit, Conductors. **Install:** Footings, Conduit, Conductors and Electrical Connections for Exterior Menuboard, Preview Board and Speaker Post. Provide power for installation by Supplier.	**Material:** Anchor bolts, exterior menuboards, preview board, menuboard extenders, and Order Confirmation Board if applicable. Provide Anchor Bolt Patterns/Template to G.C. **Install:** Menuboard, Preview Board	
(Exterior Menuboard Panels and Inserts) L concepts only	**MillerZell** Ryan Spalding 404-691-7400 **Zimmerly & Co.** Nykesha Cole 888-243-8557	Varies	Varies	Distrib.	Manuf.	Drop	N/A	G.C.	G.C.	Owner / G.C.	Owner	**Material:** N/A **Install:** Install exterior menu board panels after local signage installer completes exterior menu board housing installation.	**Material:** Exterior menu board panels and inserts **Install:** Menuboard Inserts to be Pre-Loaded by Supplier.	
(Interior Menuboards and Inserts)	**Posterloid** Teresa Somers phone: 800-651-5000 or **IPI** Andy Kaplan phone: 800-435-9659	Varies	Varies	Distrib.	Manuf.	Consol. Pkg.	2	G.C.	G.C.	Owner / G.C.	Owner	**Material:** N/A **Install:** Interior Menu Board	**Material:** Interior menuboard, brackets **Install:** Menuboard Inserts to be Pre-Loaded by Supplier.	

Vincent+Murphy Incorporated
637 Fifth Avenue
San Rafael, Ca. 94901
(415) 451-2500
FAX 451-2595

LICENSED ARCHITECT
HUGH EDWARD MURPHY
No. C17928
REN. 10/31/07
STATE OF CALIFORNIA

JOB NUMBER
H0510

SUBMITTALS
03/24/06 BLDG PC#1 SUBMITTAL

REVISIONS

CONTRACT DATE:
BUILDING TYPE: KA60-Y04
PLAN VERSION: JAN 05 D
SITE NUMBER:
STORE NUMBER:

KFC / A&W
3144 S. BASCOM AVENUE
SAN JOSE, CA 95124-2022

KA60-Y04

SCOPE OF WORK

SC-5

W:\Data\harmon\2005\H0510_san jose_bascom\03_cd_current\100_YUM_Y04-SC-ALL.dwg modified by Dhanigan at Jun 26, 2006 - 3:50pm

SCOPE OF WORK

The Scope of Work sheets document how the Owner, GC, Vendor, and Distributor interact on items with shared responsibilities. The majority of this building is supplied and installed by the GC. Some items are supplied and installed by the owner. The scope of work covers the remaining items that are not as simple.

Definitions:

BOH - (Back of House) - The portion of the restaurant behind the service counter. Includes Service Counter, Kitchen and Support areas.
CONSOL. PKG. (Consolidated Package) - Multiple items combined into a single package and shipped to the destination by the Distributor.
C.M. - (Construction Manager) - Representative of Owner who manages construction.
DESTINATION - Location where an item is to be delivered. Example: the site; the G.C.'s warehouse, the Installer's shop, etc.
DIRECT - Items shipped directly from Supplier to destination - Ordered by Owner or G.C.
DISTRIB. (Distributor) - Example: N. Wasserstrom & Sons; PrimeSource; UFPC Equipment Sales Group.
DROP (Drop Shipped) - Items shipped directly from Supplier to destination - Ordered by Distributor.
FOH (Front of House) - The portion of the restaurant in front of the service counter. Includes Dining, Front Hall, and Restroom areas.
G.C. (General Contractor) - Items shipped / delivered to destination by General Contractor.
INSTALLED BY - Who has the responsibility for having an item installed at the site.
INSTALLER - Who physically installs an item at the site.
MANUF. (Manufacturer) - Manufacturer who fabricates, constructs, assembles an item.
ORDERED BY - Who has the responsibility to place the order of an item with the Supplier.
OWNER - Owner of the facility.
PACKAGE # - Which consolidated Distributor package an item is shipped in. See Consol. Pkg. definition.
PAID FOR BY - Who has the responsibility for final payment of an item and/or installation.
P.O. (Plan Owner) - YUM! Employee responsible for maintaining prototype documents.
R.A.P. (Regional Architect Partner) - YUM! Employee responsible for approval of site-specific projects.
RECEIVED BY - Who has the responsibility for receiving, signing for and storing an item at the destination.
SHIPPED BY - Who has the responsibility to coordinate shipping and delivery of the item to the site or to the destination.
SHIPPING METHOD - How an item gets to a site.
SUPPLIER - Who an item is purchased from. Example: a Manufacturer; an Equipment Consolidator, etc.
WARRANTY, MATERIAL / INSTALLATION - Who is responsible for warranty repairs during the warranty period.

ITEM DESCRIPTION & APPLICATION	NATIONAL SUPPLIER INFO.	MFR. #	A&E ITEM #	ORDERED BY	SHIPPED BY	SHIPPING METHOD	PACKAGE #	RECEIVED BY	INSTALLED BY	WARRANTY MATERIAL/INSTALL	PAID FOR BY	G.C. SCOPE OF WORK	VENDOR'S SCOPE OF WORK	OWNER'S SCOPE OF WORK/GEN. COMMENTS
SMALLWARES	Varies	Varies	N/A	Distrib.	Distrib.	Consol. Pkg.	?	G.C.	G.C. & Owner	Owner / Owner	Owner	**Material:** N/A **Install:** Receive, Inventory and assist operations with placement. Install anchors and fasteners for miscellaneous items per OPs instructions.	Material: N/A Install: N/A	General Comment: Operations to set smallwares in place.
SWITCHGEAR	Accuserv Buddy Bockweg or Charlie Jacobs Phone: (877) 707-7378 Fax (502) 961-0357	N/A	varies	Distrib.	Distrib.	Drop	N/A	G.C.	G.C.	Owner/ G.C.	G.C.	**Material:** Breakers and outlet devices required by local jurisdiction if different from that specified. Conductors, conduit, lug, 3-phase motor starters. Disconnects for roof top mounted equipment are supplied by others. Supply C.T. Cabinet if not provided by utility company. **Install:** Service entrance, main switch panel, branch panels with circuit breakers; Conductors from transformer, conductors from MSB to panels, panel rough-ins, and panels. Install all circuit wiring to sub panels and equipment per drawings. All other electrical devices and connections for service entrance hook-ups, including secondary wiring. Follow electrical design per drawings. Report any discrepancies to Owner's representative ASAP.	**Material:** Service entrance, main switch board, branch panels with circuit breakers (as noted on plans). **Install:** N/A	General Comment: 4-week lead-time 1-year parts warranty
TACO System T and TL concept only	**En-Point Technologies** Len Marx Phone: (800) 800-4214 ext. 5721 Fax: (310)727-5880	Varies	F-040 F-060	Owner	Supplied	Drop	N/A	Manuf. (Local Installer)	Manuf. (Local Installer)	Owner	Owner	Material: Complete high & low voltage electrical systems per plans, including pull strings for communication lines. Install: Complete high & low voltage electrical system per plans, including pull strings for communication lines.	Material: Server computer, key board, monitor, fax, office printer, UPS, power chords, low voltage wire and software. Install: Server computer, key board, monitor, fax, office printer, UPS, power cords: Place in office. Low Voltage Wire: Pull wire to all PAR & related equipment and make connections. Software: Install software.	General Comments: YUM! places order when they receive the store's groundbreak notice. Gaylin Tenkley at 949-863-4800 and Carolina Saravia at 949-863-3656 are responsible for ordering the equipment and coordinating with the POS shipment for company stores.
TELEPHONE COMMUNICATIONS	Company Stores: YUM! Telecom Patricia Montgomery 800-325-4066 x23 Fax: 972.338.8672 patricia.montgomery@pizzahut.com Franchise Stores: By Owner through Local Phone Service Provider.	N/A	N/A	Owner	Manuf.	Direct	N/A	Manuf. (Local Installer)	Manuf. (Local Installer)	Owner	Owner	Material: G.C. to provide all J-boxes, conduits, pull-strings and outlets. Permanent Power to be in place before installation can begin. Contact YUM! Telecom when permanent power is active. Install: G.C. to install all J-boxes, conduits, pull-strings and outlets ready for supplier, and confirm that permanent power is active prior to installation. Set backboard for D-Mark panel. Install conduit and pull strings as required (interior and exterior).	Material: Supplier to provide all wiring and equipment. Install: Supplier to install all wiring and telephone equipment.	General Comments: YUM! Telecom provides installation and phone equipment for company stores. YUM! Telecom places order when they receive the store's groundbreak notice. Franchisees to order phone lines at their discretion.
WALK-IN COOLER / FREEZER One-Piece	I.C.S. Gary Tinterow Phone: (800) 835-0001 x122 gary.tinterow@icsco.com Fax: (316) 733-2434 Stacey Hoff Phone: (800) 835-0001 x105 stacey.hoff@icsco.com Fax: (316) 733-2434	Varies	varies	Distrib.	Distrib.	Drop	N/A	Manuf.	Manuf / G.C.	Owner / Owner (G.C. responsible for weather tight installation at building shell)	Owner	**Material:** Provide concrete footings / slab, counter flashing at walk-in roof, condensate drains as shown on plans, power and conduit from building to walk-in condensers. Accessibility to slab to be provided. **Install:** All flashing kits inlcuding base trim, roof flashing, corner trim, interior cove base trim and door trim. Finish installation of interior angle flashing to slab. Final connection to power and condensate drains. Install Clear-Vu curtains. Install hurricane tie-downs if required. Start-up is not required.	**Material:** Walk-In Cooler / Freezer complete package. **Install:** Walk-In Cooler / Freezer. Off-load and set in place if walk-in slab is accessible. Seal to slab. Install interior floorless wall angles. If walk-in slab is not accessible unit will be off-loaded at nearest accessible location.	**General Comments:** Hold-up buttons inside coolers and freezer by security supplier. No Clear-Vu curtains in chicken cooler. If the exterior of the walk-in cooler is to be painted, preparation shall consist of power washing to remove dirt and grease.
WALK-IN COOLER / FREEZER Panelized	I.C.S. Gary Tinterow Phone: (800) 835-0001 x122 gary.tinterow@icsco.com Fax: (316) 733-2434 Stacey Hoff Phone: (800) 835-0001 x105 stacey.hoff@icsco.com Fax: (316) 733-2434	Varies	varies	Distrib.	Distrib.	Drop	N/A	G.C.	G.C.	Owner/ G.C.	Owner	Material: Provide concrete footings / slab, condensate drains as shown on plans, power and conduit to walk-in condensers, and refrigerant lines. Install: Off-load of complete package, complete installation of package, start-up of refrigeration systems. Clear-vu curtains.	**Material:** Complete panelized (unassembled) Walk-In Cooler / Freezer package including walls, floors (where applicable), ceilings, condensers, clear-vu curtains, cove base and interior floorless wall angles. **Install:** N/A	General Comments: Hold-up buttons inside coolers and freezer by security supplier. No Clear View curtains in chicken cooler.
WATER HEATER	**Lee Supply** Phil Duke phone: 800-873-1107 fax: 812-941-0059 phil.duke@leesupply.net	EF-100T-199E3N	B-215	Distrib.	Distrib.	Drop	N/A	G.C.	G.C.	Owner/ G.C.	Owner	**Material:** Electric conduit and conductors, gas line, water lines. **Install:** Complete installation of water heater including intake and exhaust flues and owner supplied concentric vent kit	**Material:** Closed combustion water heater, concentric vent kit **Install:** N/A	
WATER SOFTENER SYSTEM T and TL concept only	**CUNO Corp** CUNO Support Services phone: 800-800-0657 **YUM! Brands Representative** **Heidi Hairston** phone: 949-863-4336 email: heidi.hairston@yum.com	TBSM125E	B-200	Distrib.	Distrib.	Drop	N/A	G.C.	G.C.	Owner/ G.C.	Owner	**Material:** All plumbing and electrical items required for complete installation. **Install:** Complete installation of water softener system per included instructions. Place on wire shelf. Start-up. (CUNO can provide start-up for approx. $150)	**Material:** Water softener tank, brine tank, 50# bag of salt, install and start-up instructions, salt monitor, 24 volt transformer, bypass control, and test strips. **Install:** N/A	
YUM SPEAK	**Miller Zell** Tracy Gibson phone: 404-526-1462 cell: 404-569-0232	varies	varies	Distrib.	Distrib.	Drop	N/A	G.C.	G.C.	Owner/ G.C.	Owner	**Material:** Miscellaneous fasteners or adhesive as required. **Install:** Complete installation of YUM speak components with the exception of those noted as "installed by store manager".	**Material:** Complete YUM speak package and installation guide **Install:** N/A	
												General Notes: 1) G.C. bears final responsibility for coordination of Delivery and Scheduling of materials, trades, locals, etc. 2) C.M. to verify pre-determined dates of consolidated package drops with G.C. 3) G.C. to contact C.M. for regional contact names and numbers as needed if national supplier representative is not available. 4) G.C. to verify list of Distributor provided materials received on site with site specific equipment quote from distributor.		

Vincent+Murphy Incorporated
637 Fifth Avenue
San Rafael, Ca. 94901
(415) 451-2500
FAX 451-2595

LICENSED ARCHITECT
FRANCIS EDWARD MURPHY
No. C17926
EXP. 10/31/07
STATE OF CALIFORNIA

JOB NUMBER
H0510

SUBMITTALS
03/24/06 BLDG PC#1 SUBMITTAL

REVISIONS

CONTRACT DATE:
BUILDING TYPE: KA60-Y04
PLAN VERSION: JAN 05 D
SITE NUMBER:
STORE NUMBER:

KFC / A&W
3144 S. BASCOM AVENUE
SAN JOSE, CA 95124-2022

KA60-Y04

SCOPE OF WORK

SC-6

W:\Data\harman\2005\H0510_san jose_bascom\03_cd_current\100_YUM_Y04-SC-ALL.dwg modified by Dhonnigan at Jun 26, 2006 - 3:50pm