70673

PLACE

70673

Sub Doc Type

BL

Number LG Docs

0047

Box Number

Doc Type

PL

Street #

Street Dir

Street Name

NO ADDRESS

Street Type

Tract Number

Document Date

	Prepped By	Scanned By	Indexed By	Verified By
Initials	Ho			
Date	5/16/01			

2720 ALUM ROCK AVE.

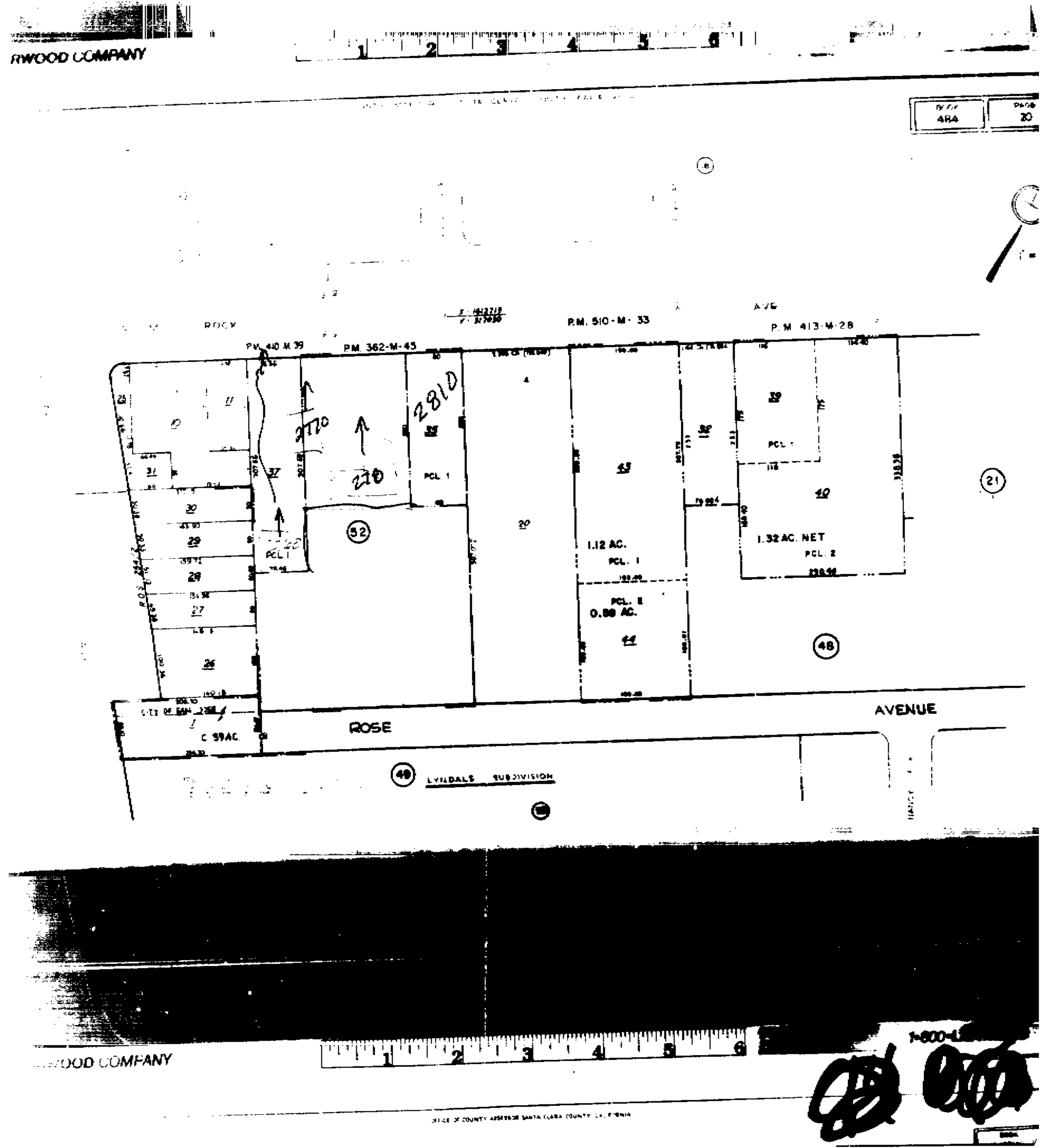
RWOOD COMPANY
BOOK 484
PAGE 20
ROCK
AVE
P.M. 410-M-39
P.M. 362-M-45
P.M. 510-M-33
P.M. 413-M-28
2810
2770
270
PCL. 1
1.12 AC.
PCL. 1
PCL. 2
0.88 AC.
1.32 AC. NET
PCL. 2
C 59AC.
ROSE
AVENUE
LYNDALS SUBDIVISION
52
48
49
21
OOD COMPANY
OFFICE OF COUNTY ASSESSOR SANTA CLARA COUNTY, CALIFORNIA

"THESE DRAWINGS HAVE BEEN REVIEWED
AND FOUND IN SUBSTANTIAL COMPLIANCE
WITH STATE & LOCAL CODES"
MARK V. SUNDBERG, ARCHITECT C-1103

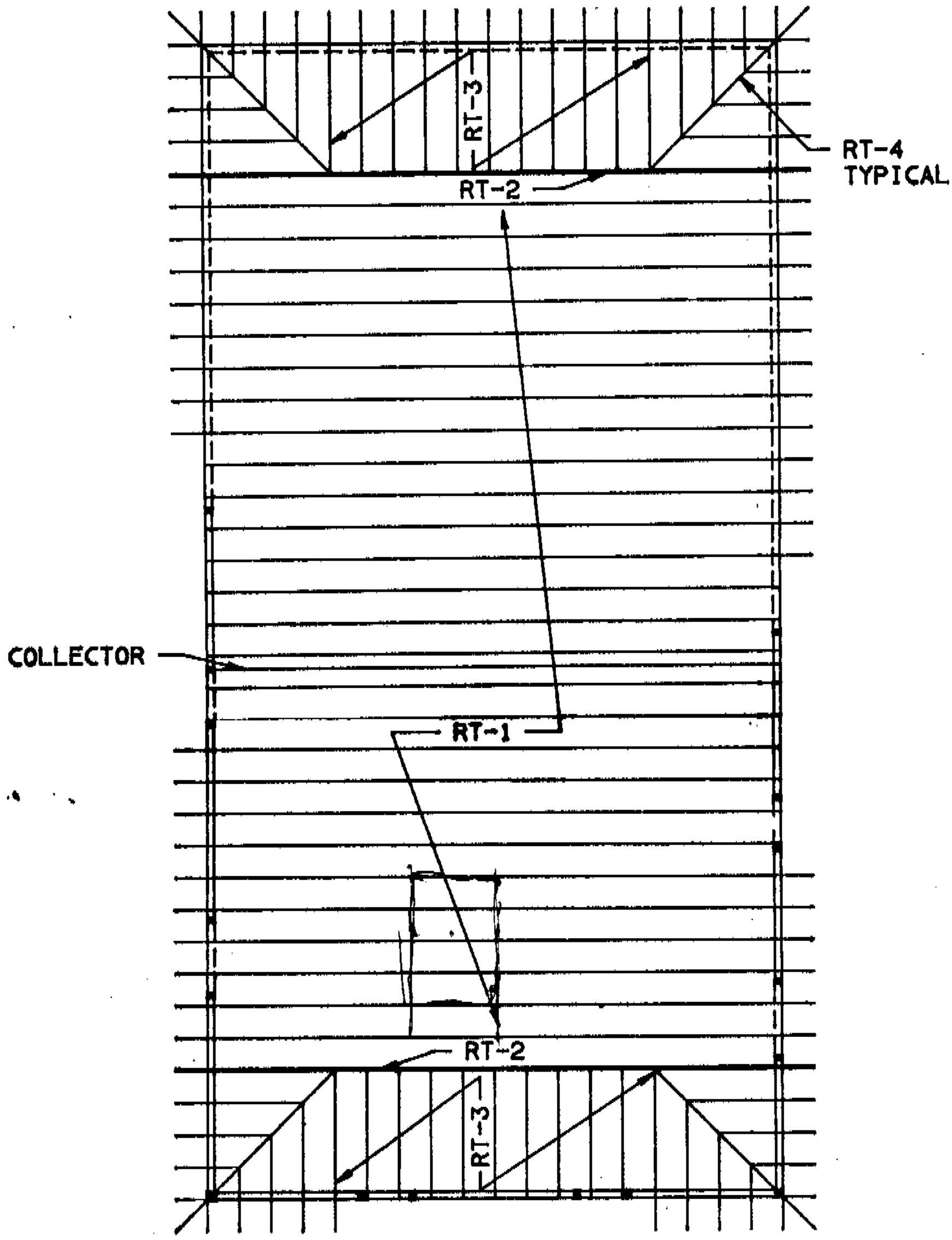

70673

2

TACO BELL

VICINITY MAP

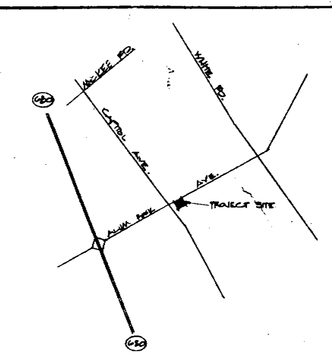

BUILDING DATA

OCCUPANCY ..... MIXED B-2/A-3
CONSTRUCTION ..... TYPE V N
FLOOR AREA ..... 2592 SQ. FT.
STORIES ..... ONE
OCCUPANTS ..... 77 (DINING)
..... 14 (OTHER)

ENERGY COMPLIANCE STATEMENT

I HAVE REVIEWED THE CURRENT CALIFORNIA ENERGY CONSERVATION STANDARDS FOR NON RESIDENTIAL BUILDINGS. IN MY PROFESSIONAL JUDGEMENT, THE DESIGN IN THIS SET OF PLANS AND SPECIFICATIONS WILL CONFORM SUBSTANTIALLY WITH THE FOLLOWING DIVISIONS:

A. DIVISION 4 ENVELOPE DESIGN
B. DIVISION 586 HVAC SYSTEM AND EQUIPMENT
C. DIVISION 7 SERVICE WATER HEATER
D. DIVISION 8 LIGHTING.

DRAWING SYMBOLS

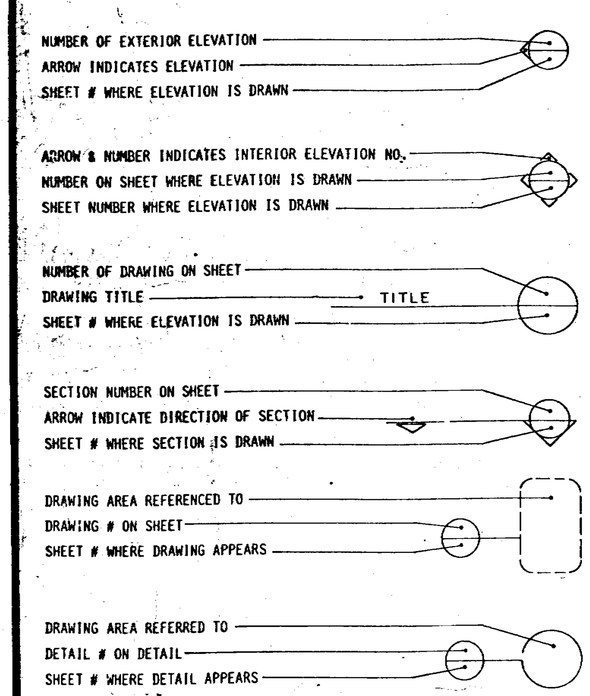

LIST OF ABBREVIATIONS

&	AND	DBL	DOUBLE	HM	HOLLOW METAL	SQ	SQUARE
@	AT	DF	DOUGLAS FIR	HP	HORSE POWER	STDS	STANDARDS
C	CENTERLINE	DIA	DIAMETER	HORIZ	HORIZONTAL	S/W	SIDE WALK
ø	DIAMETER	DISC	DISCONNECT	ICBO	INTERNATIONAL CONFERENCE OF BUILDING OFFICIALS	SYS	SYSTEM
=	EQUAL	DISP	DISPENSER			TC	TOP OF CURB
'	FEET	DWGS	DRAWINGS			TEL	TELEPHONE
"	INCH	EXIST. (E)	EXISTING	IN	INCH	THK	THICK
#	NUMBER	EA	EACH	INT	INTERIOR	TYP	TYPICAL
+/-	PLUS OR MINUS	EL	ELEVATION	INV	INVERT	UBC	UNIFORM BUILDING CODE
AB	AGGREGATE BASE	ELEC	ELECTRIC	MAX	MAXIMUM		
AC	ASPHALT CONCRETE	EMB	EMBEDMENT	MECH	MECHANICAL	VERT	VERTICAL
ASB	AGGREGATE SUB BASE	EQ	EQUAL	MFG	MANUFACTURING	VC	VERTICAL GRAIN
		EQUIP	EQUIPMENT	MIN	MINIMUM	W/	WITH
ADD'L	ADDITIONAL	EVAP	EVAPORATIVE	MON	MONITOR	WDW	WINDOW
AFF	ABOVE FINISH FLOOR	EW	EACH WAY	MTL	METAL	WP	WATER PROOF
		EXP	EXPANSION	(N)	NEW	WWM	WELDED WIRE MESH
ALUM	ALUMINUM	EXT	EXTERIOR	NIC	NOT IN CONTRACT		
ANOD	ANODIZED	FAB	FABRICATE	NO	NUMBER		
APA	AMERICAN PLYWOOD ASSOCIATION	FDN	FOUNDATION	NTS	NOT TO SCALE		
		FF	FINISH FLOOR	OA	OVER ALL		
BD	BOARD	FL	FLOOR	OC	ON CENTER		
BDLG	BUILDING	FRP	FIBERGLASS REINFORCED PLASTIC	PL	PLATE		
BLKG	BLOCKING			PLYWD	PLYWOOD		
BTU	BRITISH THERMAL UNIT	FT	FOOT	PR	PAIR		
		FTG	FOOTING	PSI	POUNDS PER SQUARE INCH		
C	CONDUIT	G	GAS				
CLG	CEILING	GA	GAUGE	PVT	PAVEMENT		
CMU	CONCRETE MASONRY UNIT	GALV	GALVANIZED	R	RADIUS, SEE REMARKS		
		GC	GENERAL CONTRACTOR	RECP	RECEPTACLE		
CONC	CONCRETE	GRD	GROUND	REF	REFER		
CONT	CONTINUOUS	GYP	GYPSUM	REQD	REQUIRED		
CORR	CORROSION	H	HIGH	RWL	RAIN WATER LEADER		
d	PENNY	HI-PT	HIGH POINT	SC	SOLID CORE		
				SIM	SIMILAR		

DRAWING INDEX

SHEET NO.		DESCRIPTION
1	A1	TITLE SHEET
2	A2.1 & 2.2	SITE DEVELOPMENT PLAN & SURVEY
3	A-2.3, 2.4, 2.5	GRADING & UTILITY LANDSCAPE, IRRIGATION
4	A3	FLOOR PLAN & ENLARGED PLAN
5	A4	REFLECTED CEILING & BLOCKING PLAN
6	A5	EXTERIOR ELEVATIONS
7 & 8	A6.1/A6.2	INTERIOR ELEVATIONS
9 & 10	A6.3/A6.4	INTERIOR ELEVATIONS
11	A7	BUILDING SECTIONS
12	A8.1	WALL SECTIONS
13	A8.2	WALL SECTIONS
14 & 15	A9.1/A9.2	DETAILS
16 & 17	A9.3/A9.4	DETAILS
18 & 19	A9.5/A9.6	DETAILS
20	A10.1	DOOR, HARDWARE & FINISH SCHEDULE
21	A10.2	WDW. SCHEDULE, WDW. & DOOR TYPES
22	A11	EQUIPMENT PLAN & SCHEDULE
23	A12	ROOF PLAN & FURNISHING PLAN
24	S1	FOUNDATION PLAN
25	S2	ROOF FRAMING PLAN
26	S3	STRUCTURAL DETAILS
27	E1	LIGHTING PLAN
28	E2	POWER PLAN
29	E3	ENLARGED POWER PLAN (NOT ISSUED)
30	P1	PLUMBING
31	M1	HVAC PLAN & SCHEDULE
32	M2	HVAC ROOF PLAN
33	M3	HOOD DETAILS
34	EC1	ENERGY COMPLIANCE FORMS

70673-1976

REQUIREMENTS

1. PUBLIC WORKS "DEVELOPMENT CLEARANCE"
2. WATER COMPANY CLEARANCE
Howard Burhoul Sand Jack
3. OBTAIN PLANNING DEPT APPROVAL FOR PLANTER REMOVAL.
4. EQUIPMENT WEIGHTS

3

TITLE SHEET

REVISIONS	BY

Backhaus Associates
Architecture - Landscape Architecture - Planning
944 Seventeenth Avenue Santa Cruz, California 95062 408-462-1970

C-11038
MAY 1 SUNDRY
JAN 26 1977
STATE OF CALIFORNIA

Name: 2720 ALUM ROCK AVE.
TACO BELL
ALUM ROCK AVE.
SAN JOSE, CA

DRAWN	
CHECKED	
DATE	
SCALE	
JOB NO.	
SHEET	A1
OF	SHEETS

P/C 39920

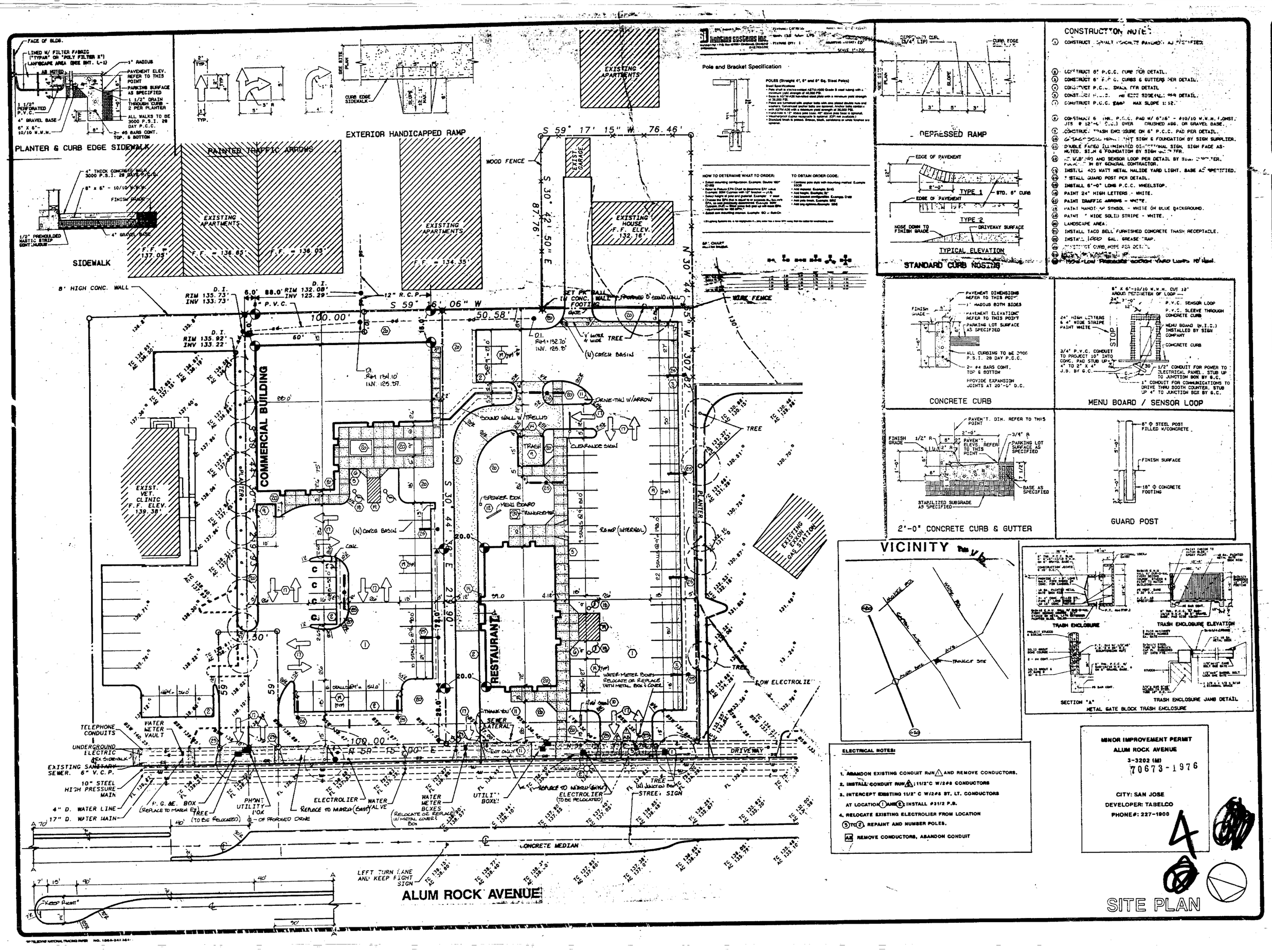

CONSTRUCTION NOTES:

1. CONSTRUCT ASPHALT CONCRETE PAVEMENT AS SPECIFIED.
2. CONSTRUCT 6" P.C.C. CURB PER DETAIL.
3. CONSTRUCT 6" P.C.C. CURBS & GUTTERS PER DETAIL.
4. CONSTRUCT P.C.C. SWALE PER DETAIL.
5. CONSTRUCT P.C.C. [illegible] PER DETAIL.
6. CONSTRUCT P.C.C. RAMP MAX SLOPE 1:12.
7. CONSTRUCT 6" THK. P.C.C. PAD W/ 6"x6" - #10/10 W.W.M. (CONST. JTS @ 12'-0" O.C.) OVER CRUSHED AGG. OR GRAVEL BASE.
8. CONSTRUCT TRASH ENCLOSURE ON 6" P.C.C. PAD PER DETAIL.
9. [illegible] SIGN & FOUNDATION BY SIGN SUPPLIER.
10. DOUBLE FACED ILLUMINATED DIRECTIONAL SIGN. SIGN FACE AS NOTED. SIGN & FOUNDATION BY SIGN SUPPLIER.
11. [illegible] AND SENSOR LOOP PER DETAIL BY SIGN SUPPLIER. [illegible] BY GENERAL CONTRACTOR.
12. INSTALL 400 WATT METAL HALIDE YARD LIGHT. BASE AS SPECIFIED.
13. INSTALL GUARD POST PER DETAIL.
14. INSTALL 6'-0" LONG P.C.C. WHEELSTOP.
15. PAINT 24" HIGH LETTERS - WHITE.
16. PAINT TRAFFIC ARROWS - WHITE.
17. PAINT HANDICAP SYMBOL - WHITE ON BLUE BACKGROUND.
18. PAINT 4" WIDE SOLID STRIPE - WHITE.
19. LANDSCAPE AREA.
20. INSTALL TACO BELL FURNISHED CONCRETE TRASH RECEPTACLE.
21. INSTALL 1000 GAL. GREASE TRAP.
22. [illegible] CURB HOSE PER DETAIL.
23. [illegible]
24. [illegible] LOW PRESSURE SODIUM YARD LIGHTS 10' HIGH.

ELECTRICAL NOTES:

1. ABANDON EXISTING CONDUIT RUN △ AND REMOVE CONDUCTORS.
2. INSTALL CONDUIT RUN △: 1 1/2"C W/2#8 CONDUCTORS
3. INTERCEPT EXISTING 1 1/2" C W/2#8 ST. LT. CONDUCTORS AT LOCATION ① AND ②: INSTALL #3 1/2 P.B.
4. RELOCATE EXISTING ELECTROLIER FROM LOCATION ⑤ TO ②. REPAINT AND NUMBER POLES.
5. AB REMOVE CONDUCTORS, ABANDON CONDUIT

MINOR IMPROVEMENT PERMIT
ALUM ROCK AVENUE
3-3202 (M)
70673-1976

CITY: SAN JOSE
DEVELOPER: TABELCO
PHONE#: 227-1900

4

SITE PLAN

REVISIONS	BY
7-23-87	

Backhaus Associates
Architecture - Landscape Architecture - Planning
64 Seventeenth Avenue Santa Cruz, California 95062 408-462-1870

REGISTERED ARCHITECT
MARK V. SUNDBERG
C-11038
STATE OF CALIFORNIA

REGISTERED LANDSCAPE ARCHITECT
MARK V. SUNDBERG
JAN 26 1988
STATE OF CALIFORNIA

Job Name:
ALUM ROCK SQUARE
ALUM ROCK @ CAPITOL AVE
SAN JOSE, CA

DRAWN D.S.B.
CHECKED
DATE
SCALE 1"=20'-0"
JOB NO.
SHEET A2.1
OF SHEETS

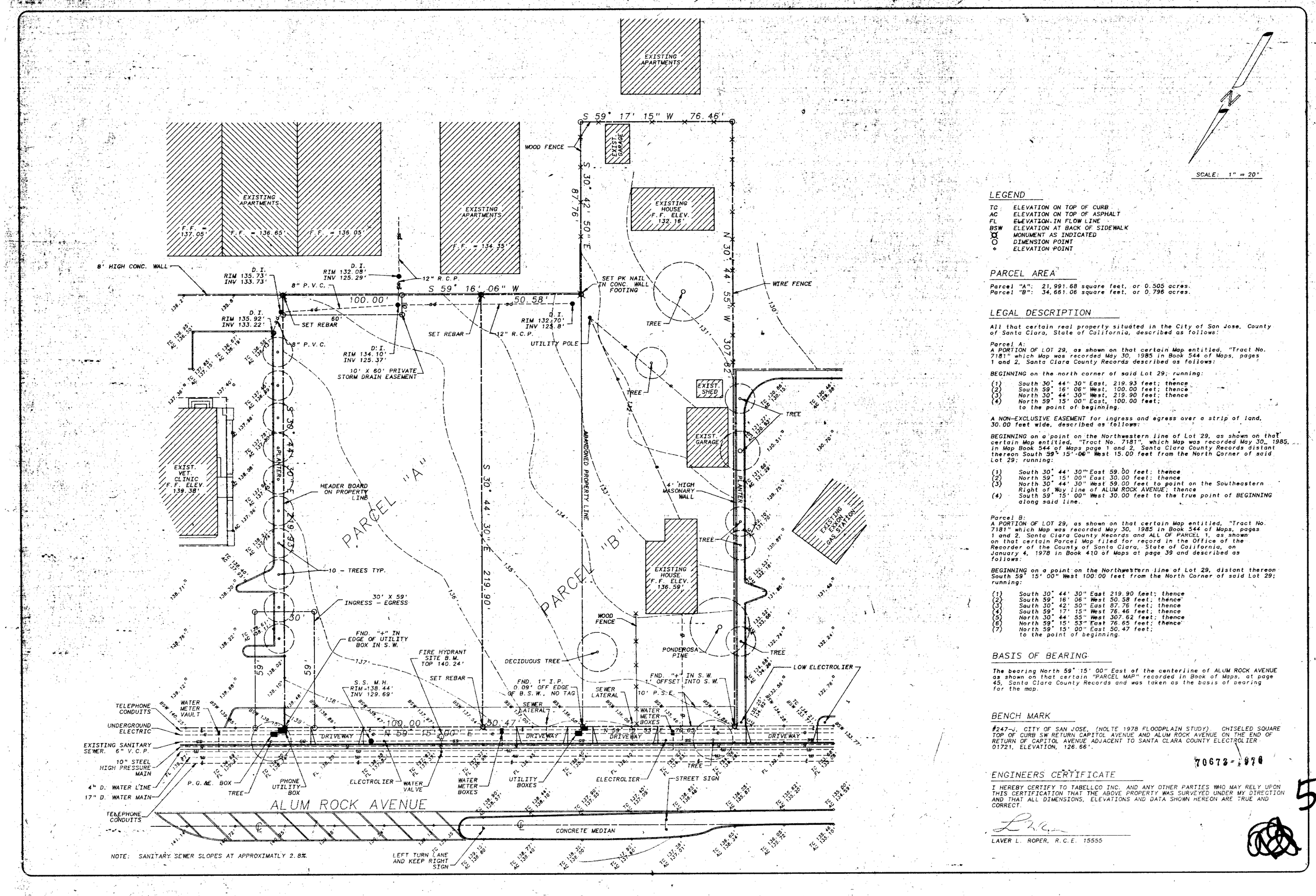

NOTE: SANITARY SEWER SLOPES AT APPROXIMATLY 2.8%.

LEGEND

TC	ELEVATION ON TOP OF CURB
AC	ELEVATION ON TOP OF ASPHALT
FL	ELEVATION IN FLOW LINE
BSW	ELEVATION AT BACK OF SIDEWALK
⊠	MONUMENT AS INDICATED
○	DIMENSION POINT
•	ELEVATION POINT

PARCEL AREA

Parcel "A": 21,991.68 square feet, or 0.505 acres.
Parcel "B": 34,661.06 square feet, or 0.796 acres.

LEGAL DESCRIPTION

All that certain real property situated in the City of San Jose, County of Santa Clara, State of California, described as follows:

Parcel A:
A PORTION OF LOT 29, as shown on that certain Map entitled, "Tract No. 7181" which Map was recorded May 30, 1985 in Book 544 of Maps, pages 1 and 2, Santa Clara County Records described as follows:

BEGINNING on the north corner of said Lot 29; running:

(1) South 30° 44' 30" East, 219.93 feet; thence
(2) South 59° 16' 06" West, 100.00 feet; thence
(3) North 30° 44' 30" West, 219.90 feet; thence
(4) North 59° 15' 00" East, 100.00 feet; to the point of beginning.

A NON-EXCLUSIVE EASEMENT for ingress and egress over a strip of land, 30.00 feet wide, described as follows:

BEGINNING on a point on the Northwestern line of Lot 29, as shown on that certain Map entitled, "Tract No. 7181", which Map was recorded May 30, 1985, in Map Book 544 of Maps page 1 and 2, Santa Clara County Records distant thereon South 59° 15' 00" West 15.00 feet from the North Corner of said Lot 29; running:

(1) South 30° 44' 30" East 59.00 feet; thence
(2) North 59° 15' 00" East 30.00 feet; thence
(3) North 30° 44' 30" West 59.00 feet to point on the Southeastern Right of Way line of ALUM ROCK AVENUE; thence
(4) South 59° 15' 00" West 30.00 feet to the true point of BEGINNING along said line.

Parcel B:
A PORTION OF LOT 29, as shown on that certain Map entitled, "Tract No. 7181" which Map was recorded May 30, 1985 in Book 544 of Maps, pages 1 and 2, Santa Clara County Records and ALL OF PARCEL 1, as shown on that certain Parcel Map filed for record in the Office of the Recorder of the County of Santa Clara, State of California, on January 4, 1978 in Book 410 of Maps at page 39 and described as follows:

BEGINNING on a point on the Northwestern line of Lot 29, distant thereon South 59° 15' 00" West 100.00 feet from the North Corner of said Lot 29; running:

(1) South 30° 44' 30" East 219.90 feet; thence
(2) South 59° 16' 06" West 50.58 feet; thence
(3) South 30° 42' 50" East 87.76 feet; thence
(4) South 59° 17' 15" West 76.46 feet; thence
(5) North 30° 44' 55" West 307.62 feet; thence
(6) North 59° 15' 53" East 76.65 feet; thence
(7) North 59° 15' 00" East 50.47 feet; to the point of beginning.

BASIS OF BEARING

The bearing North 59° 15' 00" East of the centerline of ALUM ROCK AVENUE as shown on that certain "PARCEL MAP" recorded in Book of Maps, at page 45, Santa Clara County Records and was taken as the basis of bearing for the map.

BENCH MARK

#247-J, CITY OF SAN JOSE, (NOLTE 1978 FLOODPLAIN STUDY). CHISELED SQUARE TOP OF CURB SW RETURN CAPITOL AVENUE AND ALUM ROCK AVENUE ON THE END OF RETURN OF CAPITOL AVENUE ADJACENT TO SANTA CLARA COUNTY ELECTROLIER 01721, ELEVATION, 126.66'.

70672-070

ENGINEERS CERTIFICATE

I HEREBY CERTIFY TO TABELLCO INC. AND ANY OTHER PARTIES WHO MAY RELY UPON THIS CERTIFICATION THAT THE ABOVE PROPERTY WAS SURVEYED UNDER MY DIRECTION AND THAT ALL DIMENSIONS, ELEVATIONS AND DATA SHOWN HEREON ARE TRUE AND CORRECT.

LAVER L. ROPER, R.C.E. 15555

5

NO.	DATE	REVISION	BY

DRAWN BY: KURTIS SIGGARD | SCALE: 1"=20' | DATE: 06-MAY-97

ROPER SQUARE

REGISTERED ENGINEER No. 1812 JAN 29 1998 STATE OF CALIFORNIA

REGISTERED ARCHITECT MARK SUMBERG C-11038 STATE OF CALIFORNIA

VALLEY CAD
1805 TRIBUTE ROAD SUITE "K"
SACRAMENTO, CALIFORNIA 95815
(916) 924-0194

ALUM ROCK SQUARE
ALUM ROCK AT
CAPITOL AVENUE
SAN JOSE, CALIFORNIA
SITE SURVEY | OUR JOB # VC8704

#1 OF 1

A2.2

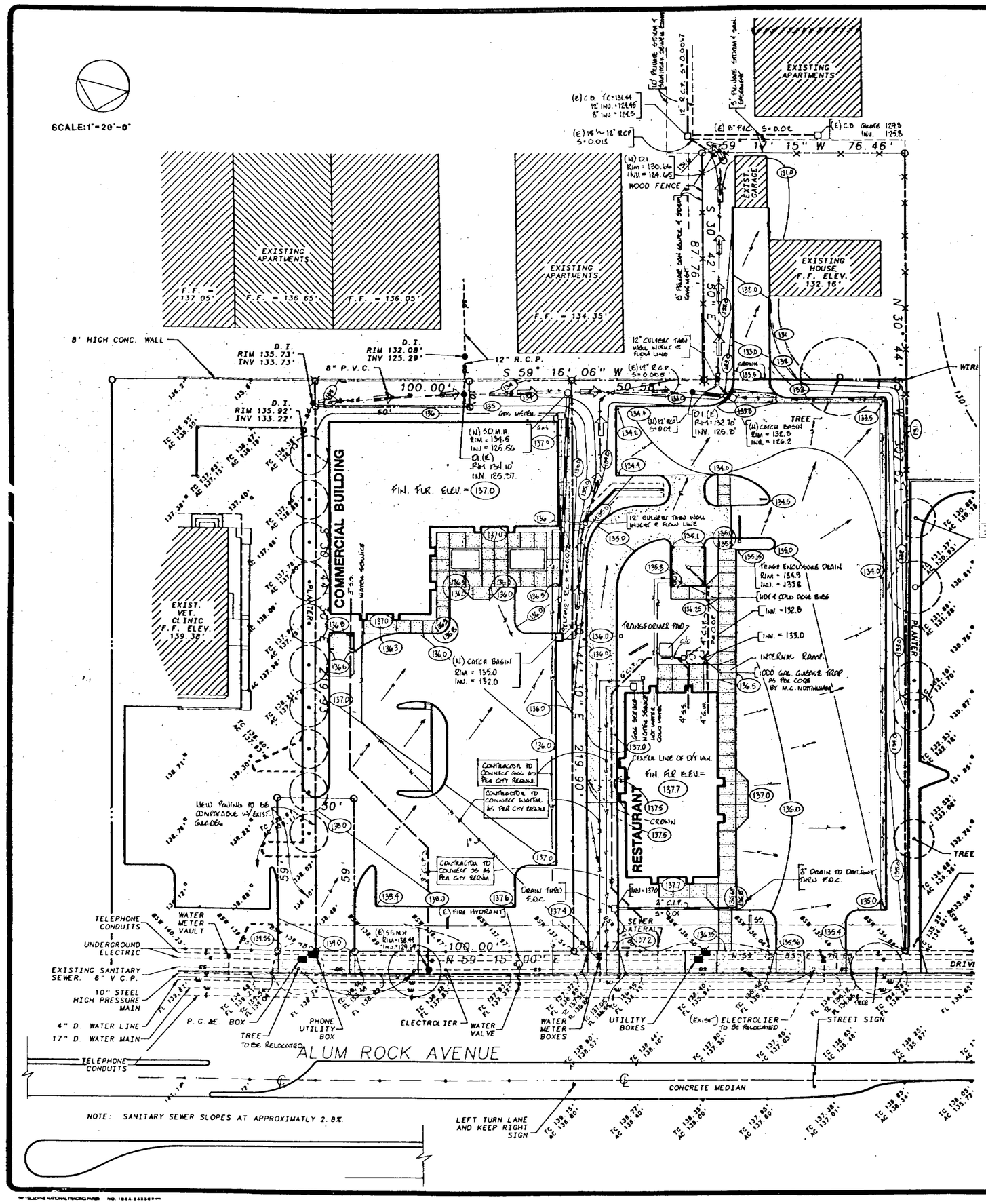

LEGEND

- SITE REFERENCE NOTE
- BUILDING TIE
- PROPOSED YARD LIGHT
- EXISTING CURB
- PROPOSED CURB
- EXISTING CURB/GUTTER
- PROPOSED CURB/GUTTER
- EXISTING EDGE OF PAVEMENT
- PROPOSED EDGE OF PAVEMENT
- EXISTING SPOT ELEVATION
- EXISTING CONTOUR
- PROPOSED PAVEMENT ELEVATION
- PROPOSED CURB/PAVEMENT ELEVATION
- EXISTING GAS LINE
- PROPOSED GAS LINE
- EXISTING WATER LINE
- PROPOSED WATER LINE
- EXISTING SANITARY LINE
- PROPOSED SANITARY LINE
- EXISTING STORM LINE
- PROPOSED STORM LINE
- EXISTING ELECTRIC LINE (OH) OR (UG)
- EXISTING TELEPHONE LINE (OH) OR (UG)
- PROPOSED SPRINKLER SYSTEM
- RELEASE ARROW

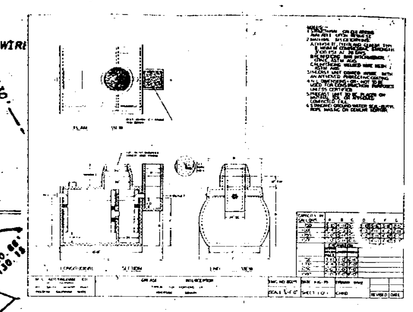

STANDARD GRADING PLAN NOTES

NOTE: This drawing is approved subject to:

1. All grading is subject to observation by the City. Permittee and Soil Engineer shall each, separately, notify the City of San Jose 408/277-5161 at least 48 hours before start of any grading.
2. Approval of this plan applies only to the excavation, placement, and compaction of natural earth materials. This approval does not confer any rights of entry to either public property or the private property of others. Approval of this plan also does not constitute approval of any improvements. Proposed improvements are subject to review and approval by the responsible Authorities and all other required permits shall be obtained.
3. It shall be the responsibility of the Permittee to identify, locate and protect all underground facilities.
4. The permittee shall maintain the streets, sidewalks and all other public rights-of-way in a clean, safe and usable condition. All spills of soil, rock or construction debris shall be removed from the publicly owned property during construction and upon completion of the project. All adjacent property, private or public shall be maintained in a clean, safe and usable condition.
5. All grading shall be performed in such a manner as to comply with the standards established by the Air Quality Maintenance District for airborne particulates (Dust).
6. This project has been designed to comply with the Flood Hazard Area Regulations as stated in Chapter 17.08 of the San Jose Municipal Code.
7. All known well locations on the site have been included and such wells shall be maintained or abandoned according to current regulations administered by the Santa Clara Valley Water District. Call 408/265-2600 Extension 382 to arrange for District observation of all well abandonments.
8. The Landscape Arch. (Name and Address) Backhaus Assoc. 844 17th Ave. Santa Cruz, Ca. 95062 has designed this project to comply with the grading recommendations in the project geotechnical report prepared by (Name) Lever L. Roper & Assocand (Dated) April 23, 1987.
9. All grading shall conform to approved specifications presented hereon or attached hereto. All grading work shall be observed and approved by the soil engineer. The soil engineer, (Name and Address) Lever L. Roper & Associates Inc. 1805 Tribute Road Suite A Sacramento, Ca. 95815 shall be notified at least 48 hours before beginning any grading at telephone number 916-929-9262. Unobserved and unapproved grading work shall be removed and replaced under observation.
10. A post construction "Final" Report is required by the Director of Public Works from the Landscape Arch. stating:
    (a) "that the construction conforms to the lines and grades on the approved plans"; or
    (b) "that all significant changes were reviewed and approved in advance by the Department of Public Works"; and the Landscape Architect shall submit an "as-built" plan.
11. A post construction "Final" Report is required by the Director of Public Works, from the Soil Engineer stating:
    (a) "that the anticipated conditions and materials and actual site conditions and materials were compatible", and supply supporting data; or
    (b) "that the design was modified to meet the new conditions and was reviewed and approved in advance by the Department of Public Works; and provide supporting data for these statements".

APPROVED FOR GRADING ONLY
DEPARTMENT OF PUBLIC WORKS
CITY OF SAN JOSE CALIFORNIA
By _____
Date _____
Expiration Date _____

quantities: Cut 399 C.Y. Fill 961 C.Y. Import 964 C.Y. Export —
392 C.Y. ENGINEERED FILL UNDER BLDG.

3-3202

CUT & FILL

CUT AND FILL VOLUMES FOR FILES:
EW.ALUM ROCK SQUARE E:ALUM ROCK SQUARE E
EW.ALUM ROCK SQUARE F:ALUM ROCK SQUARE F

STATION	CUT VOLUME CU. FT.	FILL VOLUME CU. FT.
0+00		
	343.653	1273.653
0+25		
	1042.758	2739.821
0+50		
	1372.725	4271.663
0+75		
	1762.07	5593.32
1+00		
	1971.6	4765.288
1+25		
	1678.414	3545.227
1+50		
	1203.036	2423.661
1+75		
	956.482	1117.42
2+00		
	438.967	209.217
2+20		
TOTAL	10769.705	25939.27

TOTAL CUT VOLUME: 398.877 CU. YD.
TOTAL FILL VOLUME: 960.713 CU. YD.
RATIO OF CUT TO FILL= .415 : 1

VICINITY MAP

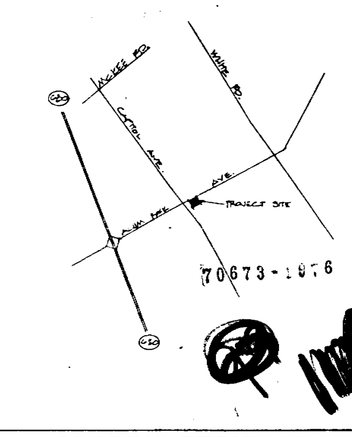

GRADING PERMIT PLAN

REVISIONS	BY
7-23-87	
1-6-88 REVISED AS PER CITY	MAP

backhaus Associates
Architecture - Landscape Architecture - Planning
844 Seventeenth Avenue Santa Cruz, California 95062 408-462-1870

Job Name:
ALUM ROCK SQUARE @ CAPITOL AVE
SAN JOSE, CA

DRAWN M.O.D.
CHECKED
DATE 7-17-87
SCALE 1"=20'
JOB NO.
SHEET A2.3A
OF SHEETS

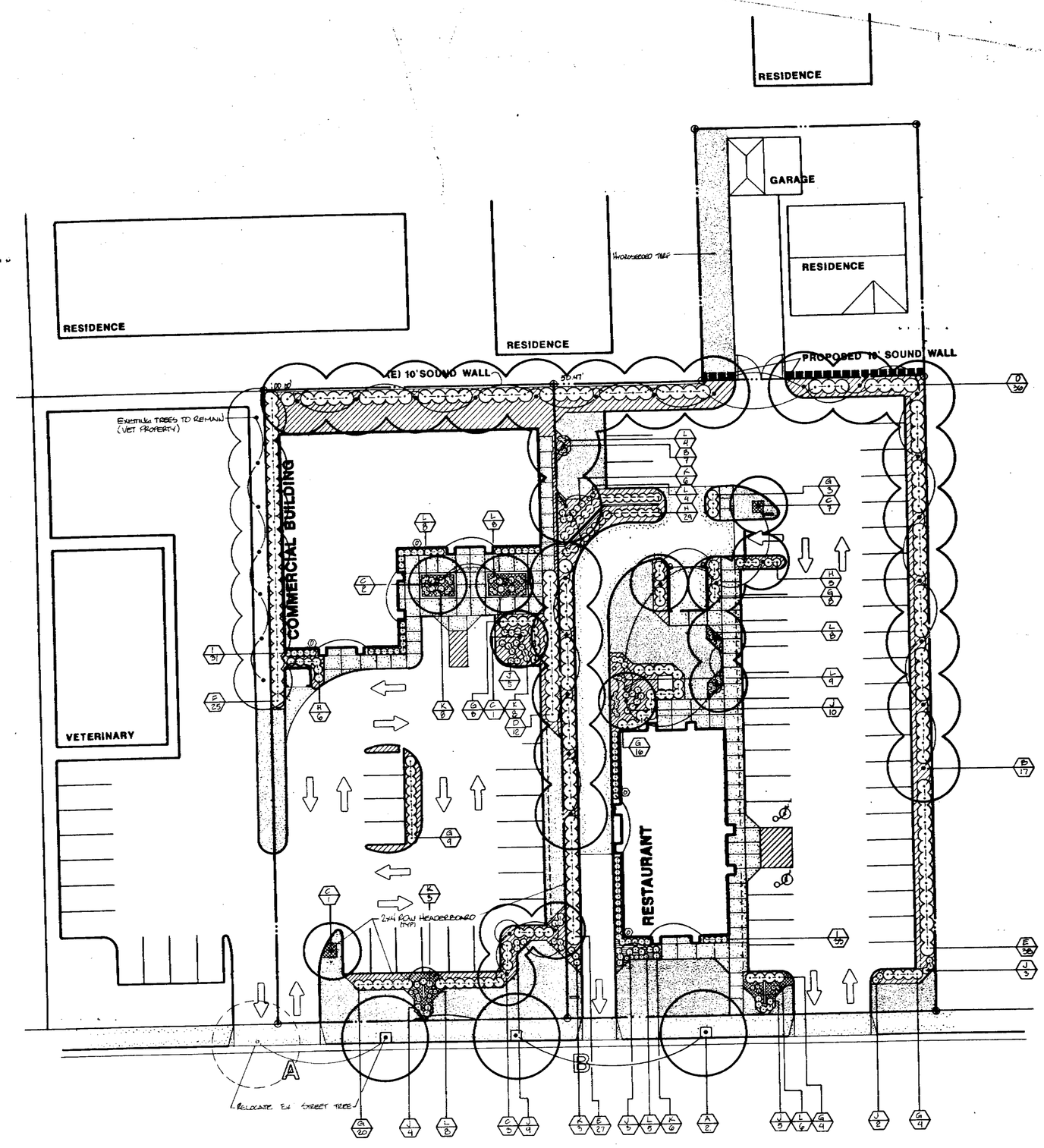

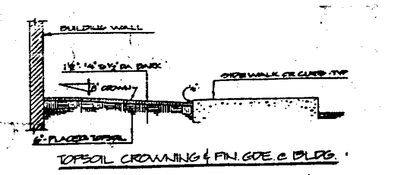

TOPSOIL CROWNING & FIN. GDE. @ BLDG.

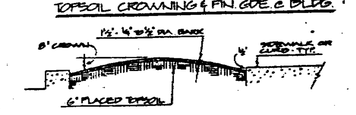

TOPSOIL CROWNING IN ISLAND PLTRS

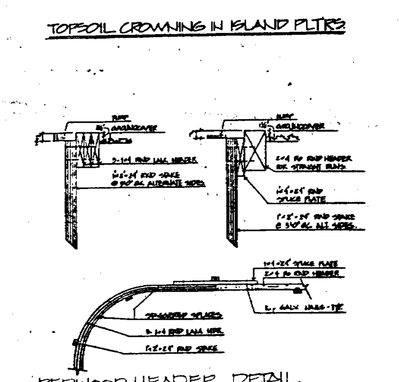

REDWOOD HEADER DETAIL

10'=1'-0"

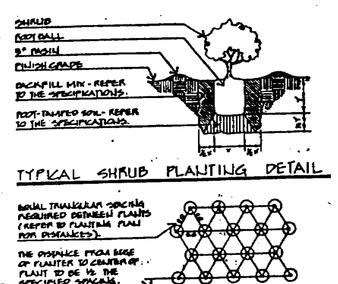

TYPICAL SHRUB PLANTING DETAIL

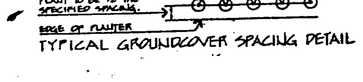

TYPICAL GROUNDCOVER SPACING DETAIL

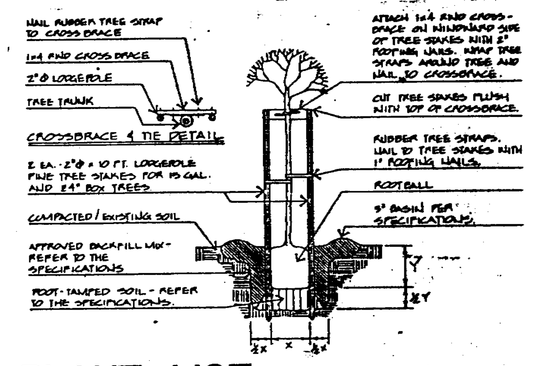

LANDSCAPE SPECIFICATIONS

1. REMOVATION & REMOVAL. The Landscape Contractor shall remove all shrubs, groundcovers, trees, ornamental gravel, rocks, and other landscape items unless otherwise noted on the Drawings. All items noted shall be removed from the site by use of truck or rental trash dumpster.
2. FINE GRADING. All landscape areas shall be filled and/or mounded as noted on Drawings. Imported fill material shall be sandy-loam and shall be free of weeds, rocks, trash, and foreign debris. All mounds and berms shall be thoroughly wetted and compacted prior to planting.
3. SOIL PREPARATION. Rip or scarify all planting areas to a depth of 6 inches and moisten. Apply uniformly to all planting areas per every 1000 square feet: 1 cubic yards of redwood shavings and 150 pounds of GRO-POWER. Rototill amendments into top 6 inches of soil.
4. PLANT INSPECTION. Notify the Landscape Architect of plant material shipments. All plants will be inspected at growing grounds prior to shipment to project site. No plant material will be accepted if root-bound or of poor quality. All material must be approved as to final location on site and in event unexpected material is planted without prior notice being given the Landscape Architect, the Contractor may be required to remove and replace at his own expense.
5. TREE & SHRUB PLANTING. The Planting Plans are diagrammatic guide to plant locations and due to actual field conditions the plants may be required to be relocated. Therefore contact the Landscape Architect for staking approval in the house in advance. Dig all plant pits twice as wide as root ball to the depth of the plant container. Scarify sides of pit and allow water to thoroughly percolate into subsurface soil prior to planting. Backfill using 75% site soil and 25% redwood shavings. Add GRO-POWER as directed by the manufacturer's recommendations. Construct a 3" high basin around each plant and water thoroughly several times prior to removal of basin.
6. TREE STAKING & GUYING. All 5 and 15 gallon trees shall be staked using LODGEPOLE fire stakes and all bound or fixed grown specimens shall be guyed using 2 galvanized 10 gauge wire and 4" x 4" x 24" redwood buried 24" below finish grade.
7. GROUNDCOVER PLANTING. Water area thoroughly to 6 inch penetration the day before planting. Plant well rooted plants from flats in a triangular pattern and water immediately following planting of each flat. Top dress with 25 pounds of GRO-POWER organic fertilizer.
8. CLEANUP OF SITE. Cleanup shall consist of cleaning daily each area by removing cage, plant containers, debris and parking areas.
9. MAINTENANCE. During the landscape process all areas shall be maintained continuously until the project has been completed and approved by the Landscape Architect.
10. GUARANTEE. The Landscape Contractor shall guarantee all container grown material up to 15 gallon size for a period of 90 days following final acceptance to be live and healthy. Container grown material 15 gallon size or larger shall be guaranteed to be live and healthy for 1 year beyond date of final acceptance.

NOTES

1. Treflan or Ronlon pre-emergence herbicide is to be applied to all planter areas following manufacture's specifications.
2. All planter beds to receive 3" of redwood or fir bark.
3. No slopes to exceed 30% except where specified.
4. All slopes exceeding 25% to receive jute netting except in areas of sod.
5. 2x4 redwood headerboard for straight runs and double 1x4's for curves are to be placed between all sodded and groundcover areas staked 4' on center using 1"x2"x12".

PLANT LIST

KEY	BOTANICAL NAME	COMMON NAME	SIZE	QUANITY	REMARKS
A	PLATANUS ACERFOLIA 'BLOODGOOD'	LONDON PLANE TREE	15GAL	2	
B	FICUS MICROCARPA 'NITIDA'	INDIAN LAUREL FIG	15GAL	24	
C	LAGERSTROEMIA INDICA 'CHEROKEE'	CRAPE MYRTLE	15GAL	14	
D	PHOTINIA FRASERI	FRASER'S PHOTINIA	5GAL	46	
E	ESCALLONIA EXCONIENSIS 'FRADESI'	FRADE'S ESCALLONIA	5GAL	65	
F	PITOSPORUM TOBIRA 'VARIEGATA'	VARIEGATED PITOSPORUM	5 GAL	25	
G	RAPHIOLEPIS INDICA 'SPRINGTIME'	INDIA HAWTHORNE	5GAL	72	
H	NERIUM OLEANDER 'PETITE SALMON'	DWF OLEANDER	5GAL	40	
I	AZALEA 'HAPPY DAYS'	LAVENDER AZALEA	5GAL	64	
J	AGAPANTHUS AFRICANUS	LILY OF THE NILE	1 GAL	41	
K	EUONYMUS PECTINATUS 'SEA GREEN'	BUSH DAISY	1 GAL	34	
L	PELEIA AMELLODES	BLUE MARGUERITE	1 GAL	59	
M	HYPERICUM CALYCINUM	AARON'S BEARD	FLATS	AS PER PLAN	PLANT @ 14" O.C.
N	MARIGOLDS / SUN ANNUALS / PER SEASON		CLAYS	AS PER PLAN	PLANT @ 6" O.C.
O	IMPATIENS / SHADE ANNUALS / PER SEASON		CLAYS	AS PER PLAN	PLANT @ 6" O.C.
P	BLUEGRASS SOD			AS PER PLAN	

SCALE: 1"=20'-0"

LANDSCAPE PLAN

OPTION 2

REVISIONS	BY
4-6-87	
Drawings 4/10/87	RB
7-16-87	DB
1-4-88	DB

Backhaus Associates
Architecture - Landscape Architecture - Planning
944 Seventeenth Avenue Santa Cruz, California 95062 408-462-1870

REGISTERED ARCHITECT MARK V. SUNDSTEDT C 11028 STATE OF CALIFORNIA

REGISTERED LANDSCAPE ARCHITECT No. 1812 STATE OF CALIFORNIA

Job Name:
ALUM ROCK SQUARE
ALUM ROCK @ CAPTOL AVE
SAN JOSE, CA

DRAWN	D.S.B.
CHECKED	
DATE	3-25-87
SCALE	1"=20'-0"
JOB NO.	
SHEET	A 2.4
OF	SHEETS

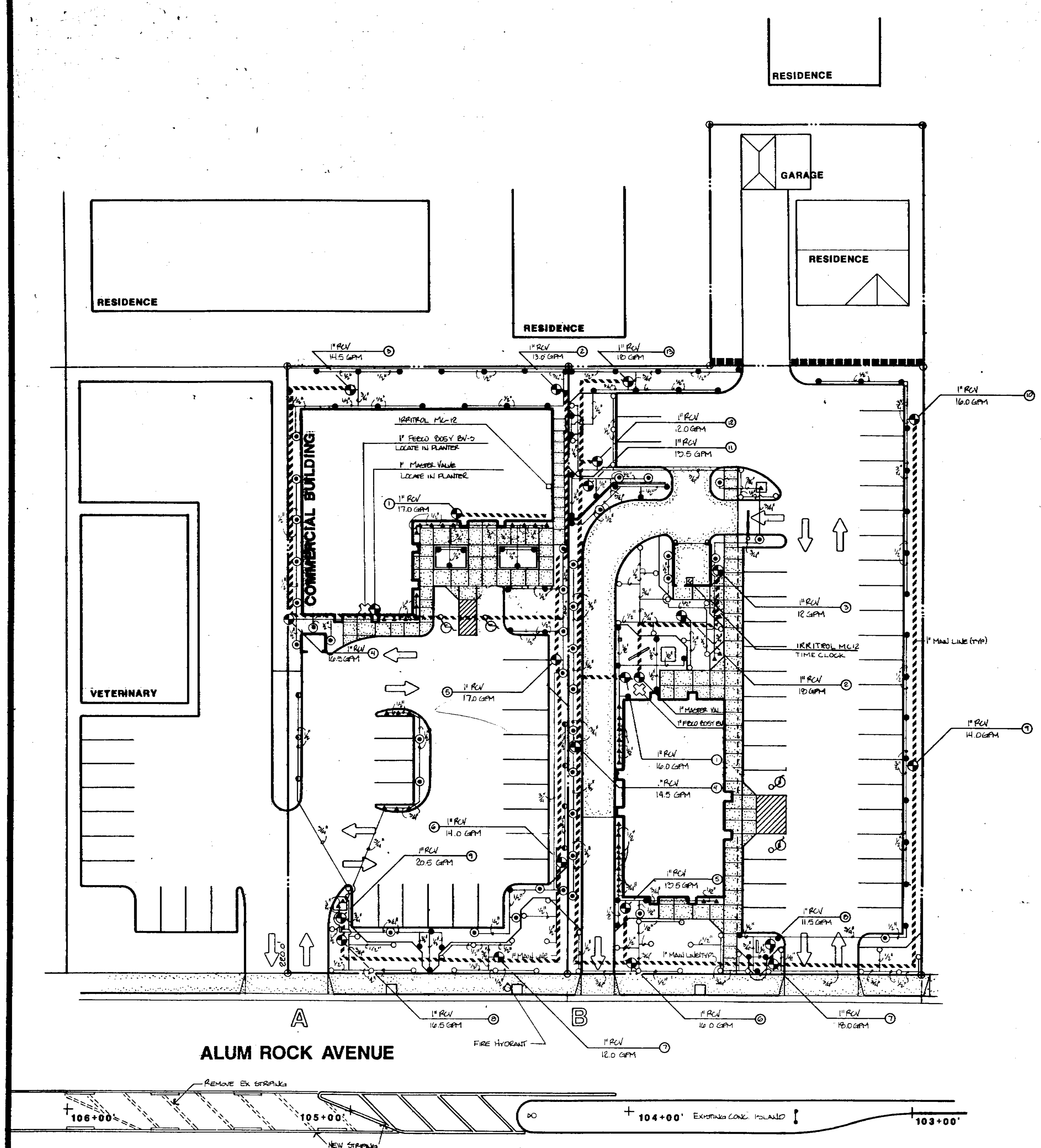

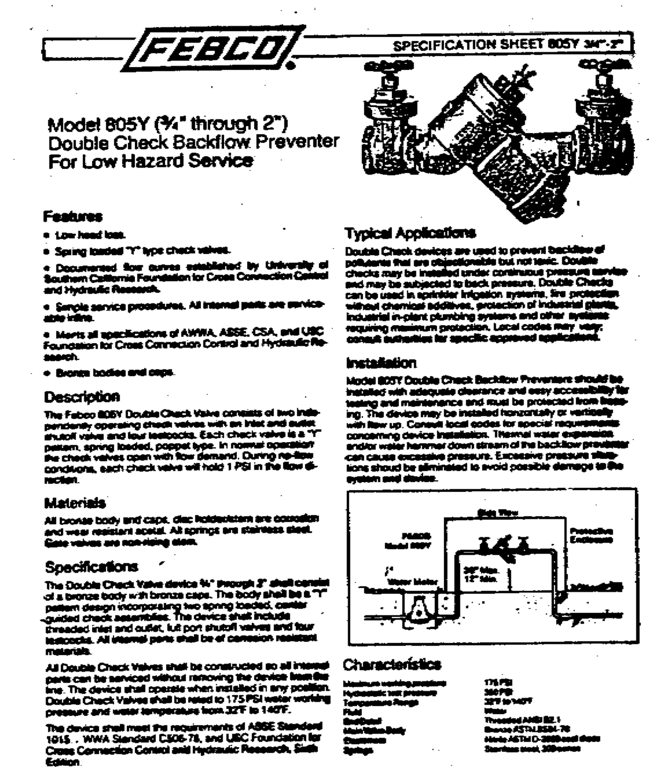

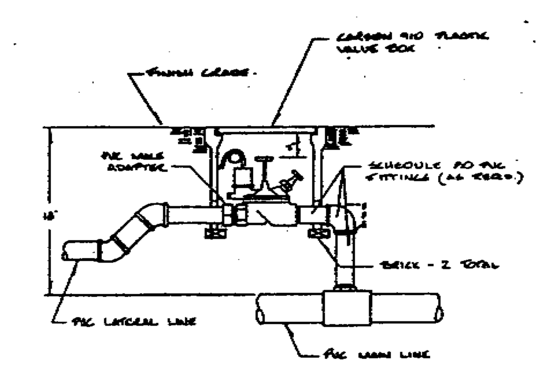

NOTE TO GENERAL CONTRACTOR:

The General Contractor is responsible for installing all irrigation sleeves for both water & electrical under asphalt & concrete.

IRRIGATION SPECIFICATIONS

1. SCOPE. The irrigation plans are a schematic guide for the convience of the Contractor and it is the intention of the Drawings to provide full coverage and adequate water to all planting areas. The Contractor shall adjust the location of all heads and/or add additional heads as deemed necessary.
2. ELECTRICAL POWER HOOKUP. The Owner shall provide the necessary power supply to the controller panel. The Landscape Contractor shall locate and install the control panel in the specified location.
3. MATERIALS. The Landscape Contractor shall install pipe, sprinklers, automatic controller, electric valves, anti-siphon device, quick coupler valves, and all related materials as indicated on the plans and herein specified.
4. VACUUM BREAKER. The Landscape Contractor shall install the specified vacuum breaker assembly where specified. The vacuum breaker shall be six (6) inches higher than the highest sprinkler head to be served by this system.
5. PRESSURE MAIN SUPPLY PIPE. Pressure supply lines shall be P.V.C. 1220, Class 315, Type I, Grade II, NSF approved as per ASTM-D1785 and ASTM D224. All pipe shall be continuously marked by the manufacturer as to class, grade, and size. Non-pressure laterallines below walkways or paved walkways or traffic lanes shall be of the same specifications as pressure main supply lines.

   Pressure pipe and non-pressure lateral lines below paved areas shall be buried to a minimum depth of eighteen (18) inches.
6. NON-PRESSURE LATERAL PIPE. All non-pressure lateral lines in planter areas shall be P.V.C. Class 200, Type I, Grade II, NSF approved. Pipe shall be continuously marked by the manufacturer as to class, type, grade, and size.

   All non-pressure lateral pipe shall be buried to a minimum depth of eight (8) inches.
7. SOLVENT. Solvent shall be as approved by manufacturer of pipe and fittings.
8. FITTINGS. Fittings shall be P.V.C., Type II, IPS Schedule 40 slip fittings and Schedule 80 threaded fittings, NSF approved as per ASTM-D2464, ASTM-D2466 and ASTM-D2467 on all P.V.C. pipe requiring solvent weld joints.
9. CONTROL WIRE. Control wire shall be direct burial wire AWG-UF sized in accordance with the valve manufacturer wire chart and specifications. Ground wire shall be white and pilot wire shall be of a different color. All splices shall be soldered and coated with general bakelite cement and wrapped with electrical tape. Provide an expansion curl at every wire connection and at least every 100 feet. Bundle and tape wire to pipe every 12 feet.
10. REMOTE CONTROL VALVES. Install all electrical control valves in an "AMATEX" valve box marked R.C.V. with a minimum of 4" of gravel under the valves. Paint a number on the valve to correspond with control station.
11. AUTOMATIC CONTROLLER. The automatic electric controller shall be a controller and is to be mounted where specified. All control equipment shall be grounded through a separte grounding circuit.
12. RISERS TO SPRINKLER HEADS. Risers shall be Schedule 80 P.V.C., threaded at both ends, manufactured for use as sprinkler risers.
13. TRENCHES & BACKFILL. All non-pressure lateral line trenches shall be a minimum depth of eight (8) inches and shall be backfilled to a minimum compaction of 80%, and all pressure main lines and non-pressure lateral lines below paved areas shall be set in a trench having a minimum depth of eighteen (18) inches and shall be backfiled to a minimum compaction of 90%.
14. TESTING. Test all pressure lines under a hydrostatic pressure of 125 pounds per square inch and hold for 2 hours. The Landscape Architect reserves the right to have all non-pressure lateral lines tested at static pressure if he feels it is necessary due to installation procedures.
15. GUARANTEE. The Landscape Contractor shall guarantee the installed irrigation system to be free of defects in materials and workmanship and that the work has been completed in accordance with the drawings, specifications and local codes. The Contractor shall repair and/or replace any defects in materials or workmanship which may develope during the period of one year form the date of acceptance. The repairs shall be accomplished within a reasonable time, as determined by the Owner. All repair costs shall be borne by the Contractor. Unusal abuse or neglect of items to be repaired or replaced are excepted.

IRRIGATION KEY

- TORO Series 570 Pop-Up Side Strip Spray Head w/ Polyethylene Riser model 850-46
- TORO Series 570 Pop-Up Spray Head w/ Polyethylene Riser model 850-46
- TORO 6" Pop-Up Spray Head w/ Thick-Walled Poly Pipe model 850-01 flex Swing Joint
- PVC Class 200 Type I
- PVC 1220 Class 315 Supply Line to Remote Control Valve
- TORO Series 252 Remote Control Valve
- IRRITROL MC-12 Automatic Time Clock
- FEBCO 805Y 1½" DOUBLE CHECK BACKFLOW PREVENTER
- TORO 6" Pop-Up Side Strip Spray Head w/ Thick-Walled Poly Pipe model 850-01 flex Swing Joint
- RAINBIRD HON PRESSURE COMPENSATING BUBBLER MOUNTED ON FLEX RISER

70673-1976

100+00'

SCALE: 1"=20'-0"

REVISIONS	BY
7-16-87	DS
1-21-88	LC

Backhaus Associates
Architecture - Landscape Architecture - Planning
844 Seventeenth Avenue Santa Cruz, California 95062 408-462-1876

Job Name:
ALUM ROCK SQUARE
ALUM ROCK @ CAPITOL AVE
SAN JOSE, CA

DRAWN D.S.B.
CHECKED
DATE 4-21-87
SCALE 1"=20'-0"
JOB NO.
SHEET **A 2.5**
OF SHEETS

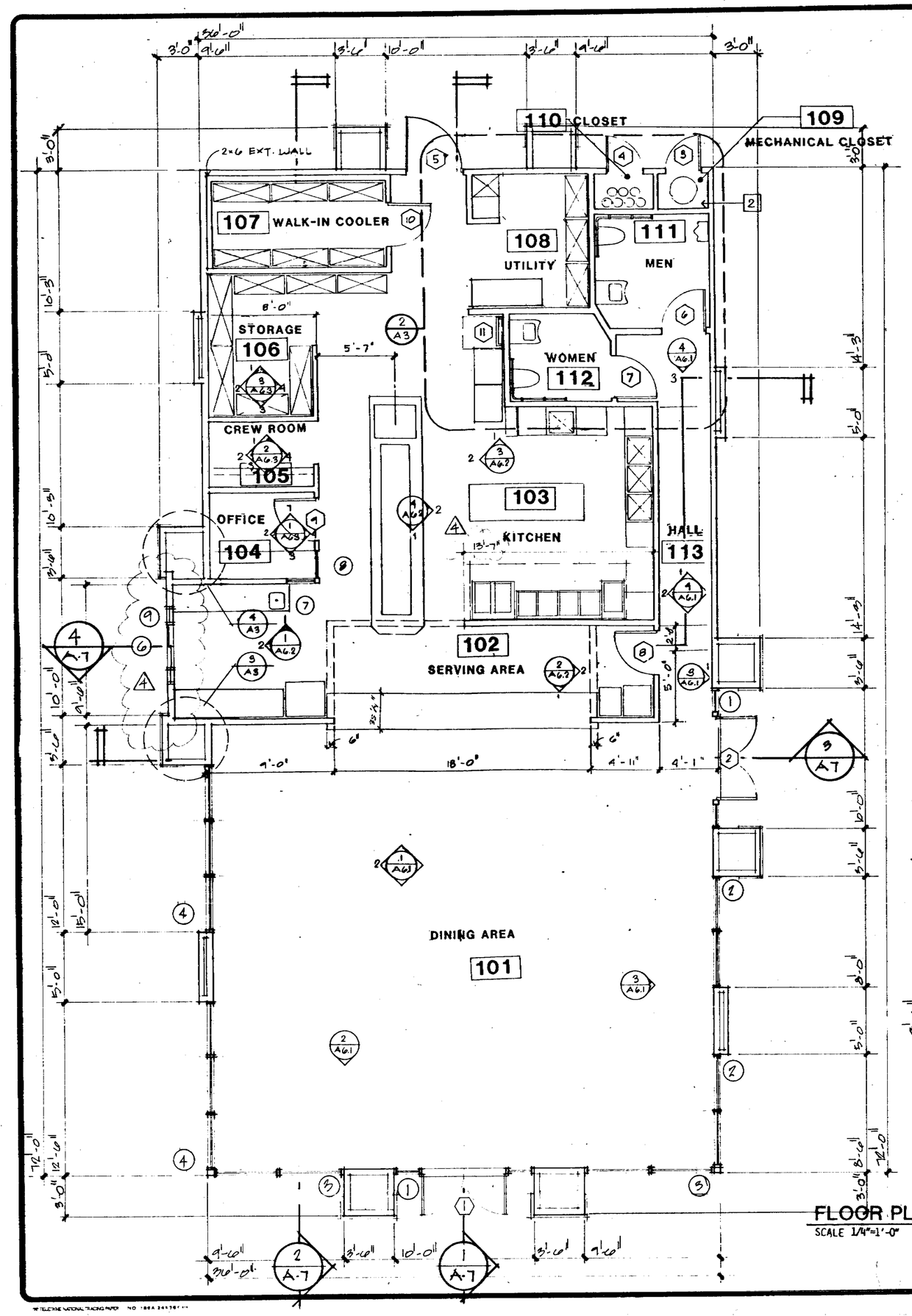

FLOOR PLAN (1/A3)
SCALE 1/4"=1'-0"

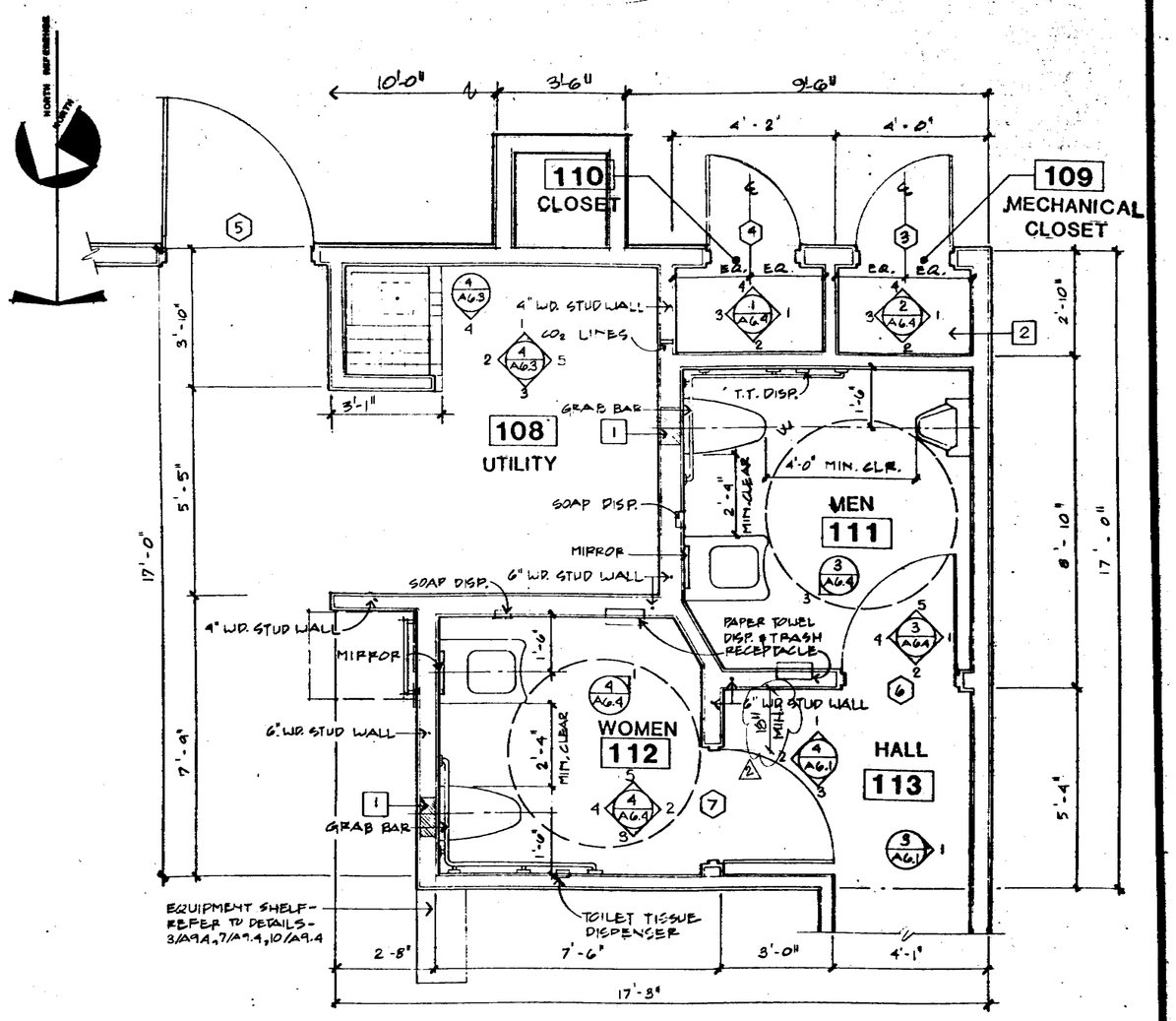

ENLARGED TOILET ROOMS & UTILITY AREA PLAN (2/A3)
SCALE 1/2"=1'-0"

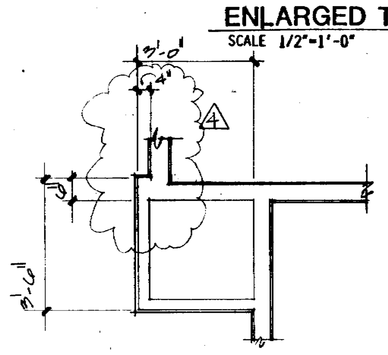

DETAIL PLAN (3/A3)
SCALE 1/2"=1'-0"

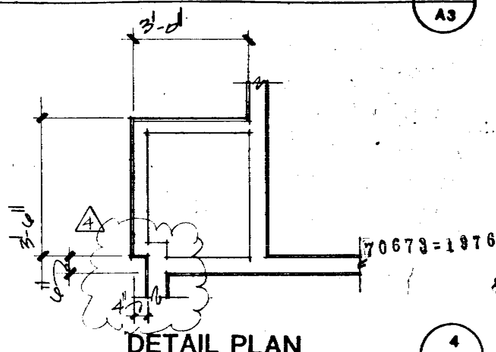

DETAIL PLAN (4/A3)
SCALE: 1/2"=1'-0"

SHEET NOTES:

1. 12x12 STAINLESS STEEL BLANK SLOAN EASY ACCESS PANEL. CENTER OVER FLUSH VALVE CONCEALED IN WALL.
2. PROVIDE AND INSTALL SEISMIC RESTRAINT DEVICE FOR WATER HEATER.
3. PIPING & CONDUIT OF ALL TYPES MUST BE CONCEALED WITHIN WALLS, FLOORS, CEILINGS OR APPROVED CONDUIT RUNS.
4. COUNTERS & CUSTOM SHELVING TO BE OF CABINET QUALITY CONSTRUCTION W/ ALL SURFACES SMOOTH & ALL CRACKS & CREVICES SEALED W/ CAULKING, TYPE SEALANT.
5. ALL GREASE FILTERS MUST BE U.L. LISTED W/ ATTACHED HANDLES ON EA. UNIT.

FLOOR PLAN & ENLARGED PLAN

REVISIONS	BY
11-07	PB
12/87	DA
1-19-88	DA

Backhaus Associates
Architecture - Landscape Architecture - Planning
844 Seventeenth Avenue Santa Cruz, California 95062 408-462-1870

REGISTERED ARCHITECT
MARK V. SUNDBERG
C-11038
JAN 26 1988
STATE OF CALIFORNIA

Job Name:
TACO BELL
ALUM ROCK AVE.

DRAWN C.F.B.
CHECKED M.V.S.
DATE
SCALE SHOWN
JOB NO.
SHEET A3
OF SHEETS

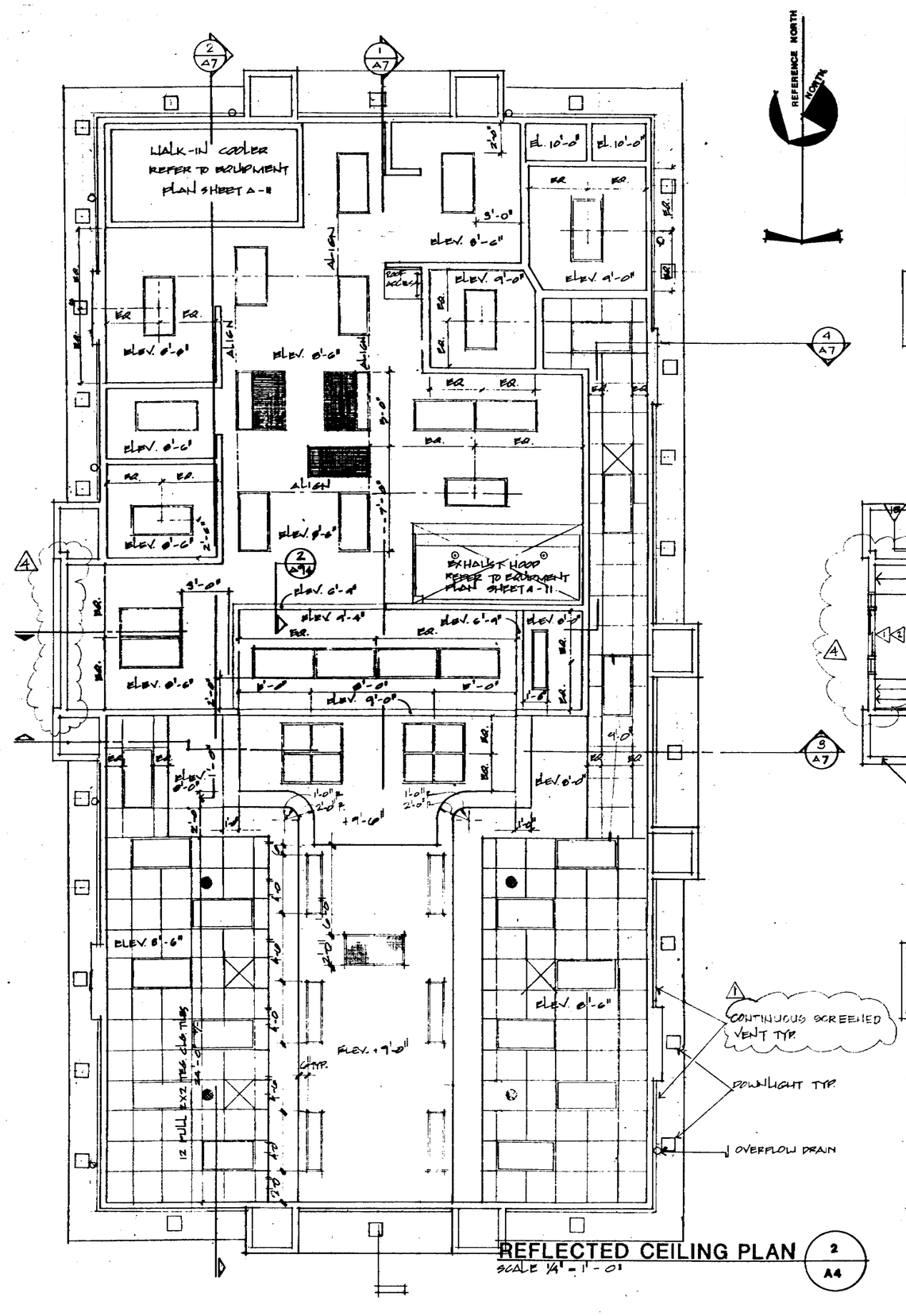

REFLECTED CEILING PLAN (2 / A4)
SCALE 1/4" = 1'-0"

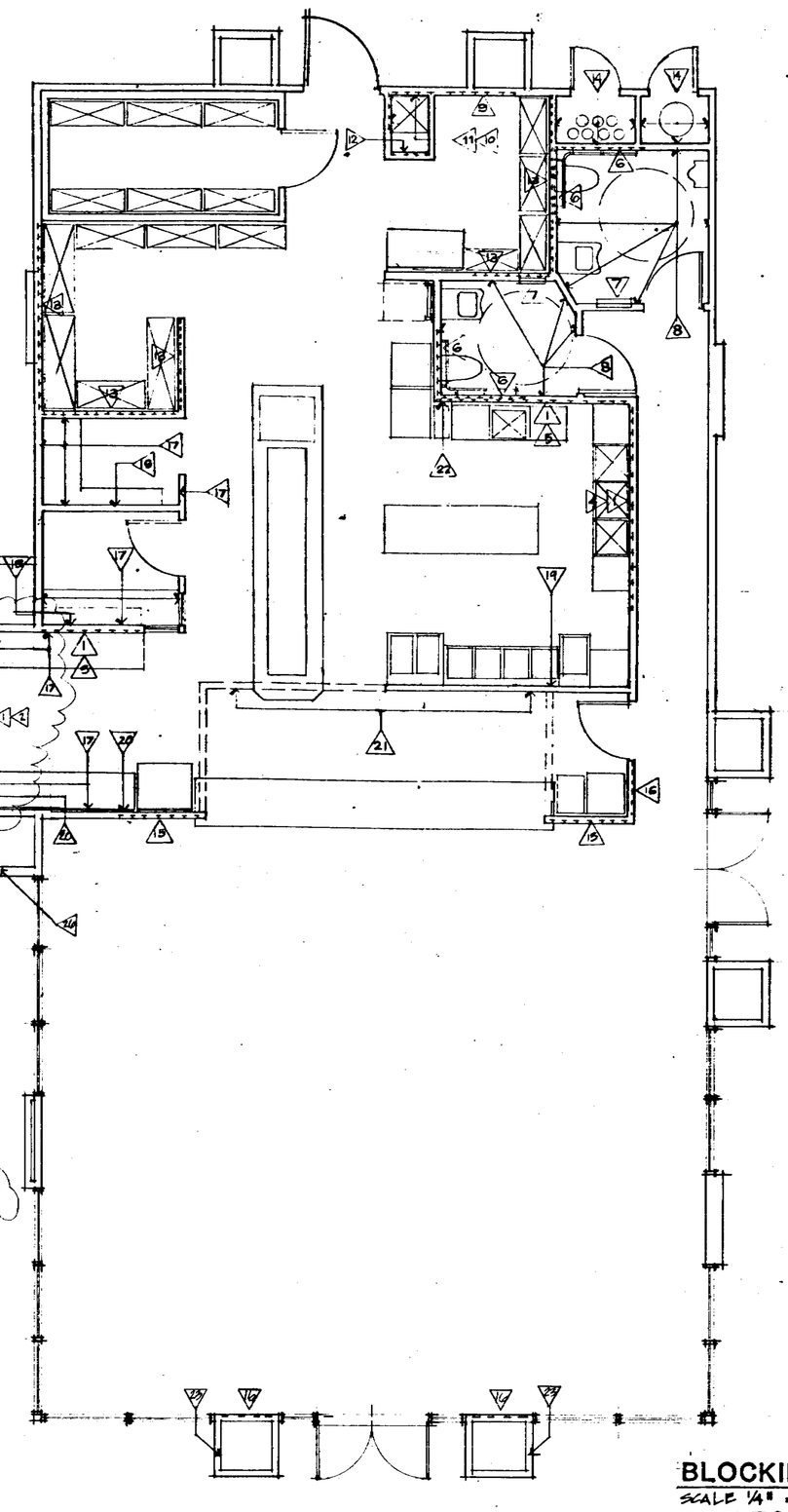

BLOCKING PLAN (1 / A4)
SCALE 1/4" = 1'-0"

REFLECTED CEILING PLAN AND BLOCKING PLAN

SHEET NOTES:

1. 4 FOOT HIGH PLYWOOD SHEATHING IN LIEU OF 5/8" GYPSUM BOARD. GLUE & NAIL TO STUDS. BLOCK ALL EDGES.
2. REFER TO 2-1/A6.2 - FOR LOCATION.
3. REFER TO 1-1/A6.2 - FOR LOCATION.
4. REFER TO 2-4/A6.2 - FOR LOCATION.
5. REFER TO 1-3/A6.2 - FOR LOCATION.
6. 2X BLOCKING W/ CENTERLINE @ 33" AFF, 5 1/2" HIGH.
7. ALLOW A MINIMUM OF 16" CLEAR AS REQUIRED FOR PAPER TOWEL DISPENSER/ TRASH RECEPTICAL - REFER TO 5-4/A6.4 OR 2-3/A6.4.
8. 5/8" PLYWOOD SHEATHING AT ALL WALLS- REFER TO FINISH SCHEDULE SHEET A10.1.
9. 2X BLOCKING W/ CENTERLINE @ 4'-8" AFF, 7 1/2" HIGH FOR COAT HOOK RACK REFER TO 1-4/A6.3.
10. 2X BLOCKING W/ TOP @ 3'-4 1/2" AFF, 7 1/2" HIGH FOR STAINLESS STEEL UTILITY SINK - REFER TO 1-4/A6.3 & 2-4/A6.3.
11. 2X BLOCKING W/ TOP @ 1'-10" AFF, 5 1/2" HIGH FOR STAINLESS STEEL SUPPORT ANGLE - REFER TO 1-4/A6.3 & 2-4/A6.3.
12. 2X BLOCKING W/ CENTERLINE @ 5'-3" AFF, 7 1/2" HIGH FOR MOP HOOK RACK - REFER TO 4-4/A6.3.
13. 2X BLOCKING W/ CENTERLINE @ 5'-4" AFF, 7 1/2" HIGH.
14. 2X BLOCKING AS REQUIRED FOR ANCHORING SEISMIC RESTRAINT DEVICE FOR TANKS - REFER TO A11, ITEM # 69.
15. 5/8" PLYWOOD TO 9'-0" AFF IN LIEU OF 5/8" PLYWOOD SPACERS @ STUDS & BLOCKING.
16. 2X NAILERS @ EACH SIDE OF STUDS W/ 5/8" PLYWOOD FLUSH W/ FACE OF STUDS FROM 3'-0" AFF TO 7'-0" AFF.
17. 2X BLOCKING W/ TOP @ 2'-10" AFF, 7 1/2" HIGH - FOR COUNTER.
18. 2X BLOCKING, ONE W/ TOP @ 8'-4" AFF & ONE W/ TOP @ 4'-0" AFF, EACH 5 1/2" HIGH.
19. PROVIDE BLOCKING FOR EXHAUST HOOD AS REQUIRED - REFER TO A/11, ITEM # 19, & TO 1-A9.6
20. PROVIDE 2X BLOCKING W/ CENTERLINE @ 6'-9" AFF FOR ANCHORING OF SHELF, 5 1/2" HIGH.
21. PROVIDE BLOCKING FOR MENU BOARD - REFER TO DETAIL 2/A9.4.
22. PROVIDE BLOCKING AS REQUIRED FOR CHOPPER SHELF - REFER TO DETAILS 3/A9.4, 7/A9.4 & 10/A9.4.
23. PROVIDE 2X6 BLOCKING FOR CMU ANCHORS @ PLANTER WALL - REFER TO DETAIL 9/A9.4.
24. PROVIDE 2X CONTINUOUS BLOCKING FOR ALL WALLS. ONE W/ TOP @ 4'-0" AFF & ONE W/ TOP AT BOTTOM OF FINISHED CEILING HEIGHT - REFER TO REFLECTED CEILING PLAN 1/A4. FOR CEILING HEIGHTS.

70073-1976

REVISIONS	BY
1	PB
1 1-19-88	DA

Backhaus Associates
Architecture - Landscape Architecture - Planning
944 Seventeenth Avenue Santa Cruz, California 95062 408-462-1870

REGISTERED ARCHITECT MARK V. SUNSBURG STATE OF CALIFORNIA

Job Name:
TACO BELL
ALUM ROCK AVE.
SAN JOSE, CA

DRAWN	C.F.Bx
CHECKED	M. VS.
DATE	
SCALE	SHOWN
JOB NO.	
SHEET	A4
OF	SHEETS

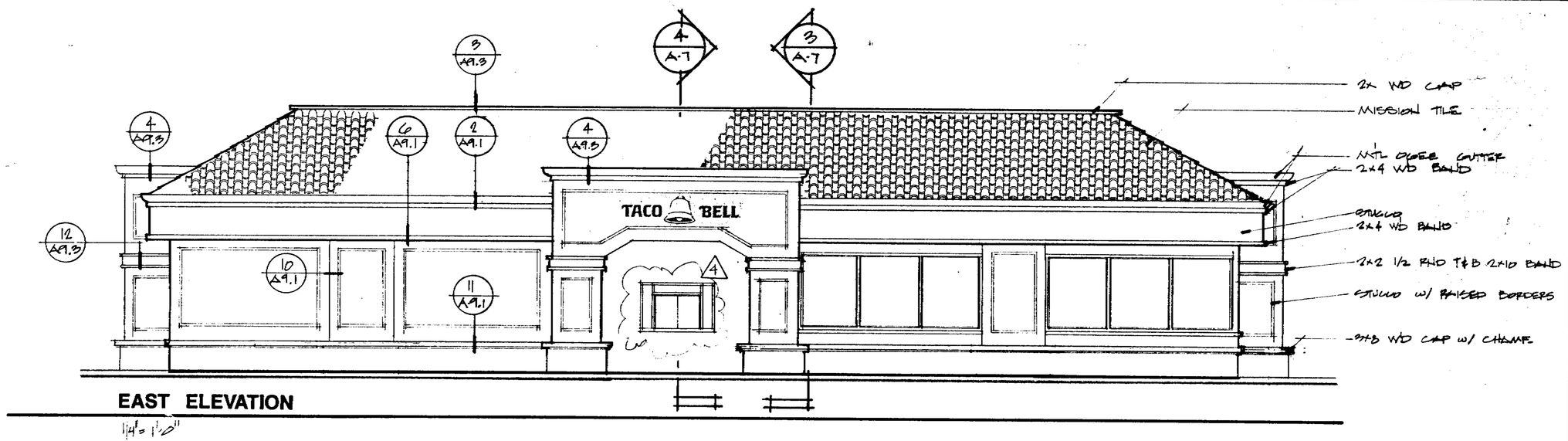

EAST ELEVATION

1/4" = 1'-0"

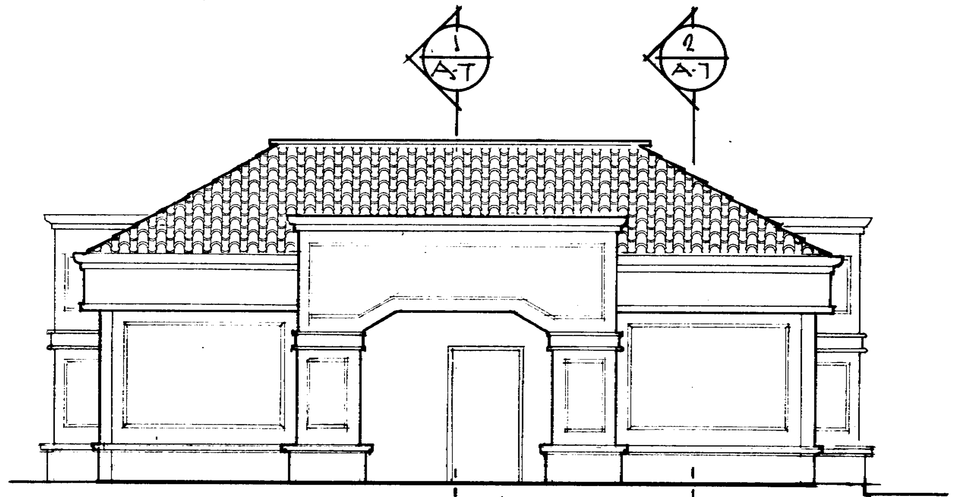

SOUTH ELEVATION

1/4" = 1'-0"

NORTH ELEVATION

1/4" = 1'-0"

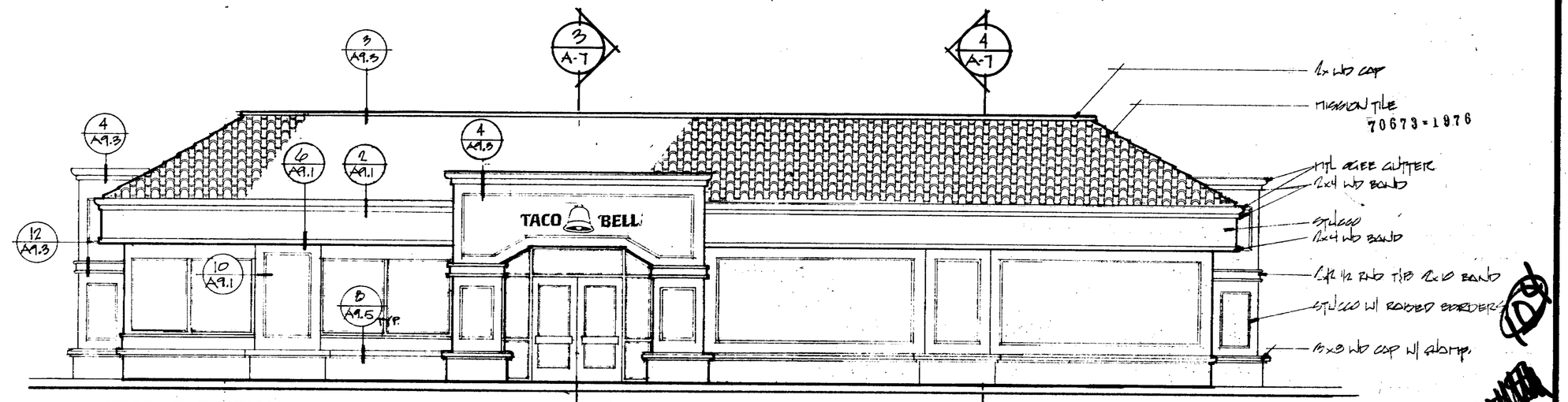

WEST ELEVATION

1/4" = 1'-0"

REVISIONS	BY
1 1-19-88	DA

Backhaus Associates
Architecture - Landscape Architecture - Planning
844 Seventeenth Avenue Santa Cruz, California 95062 408-462-1970

REGISTERED ARCHITECT
GARY V. SUNDGREN
STATE OF CALIFORNIA

TACO BELL
ALUM ROCK AVE.
SAN JOSE, CA

DRAWN	
CHECKED	
DATE	
SCALE	
JOB NO.	
SHEET	A5
OF	SHEETS

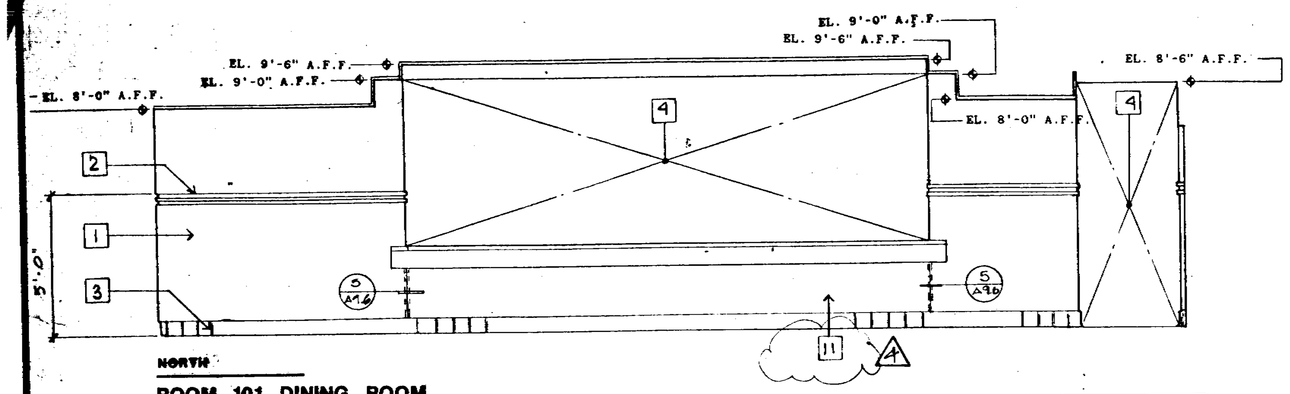

ROOM 101 DINING ROOM
SCALE: 3/8"=1'-0"

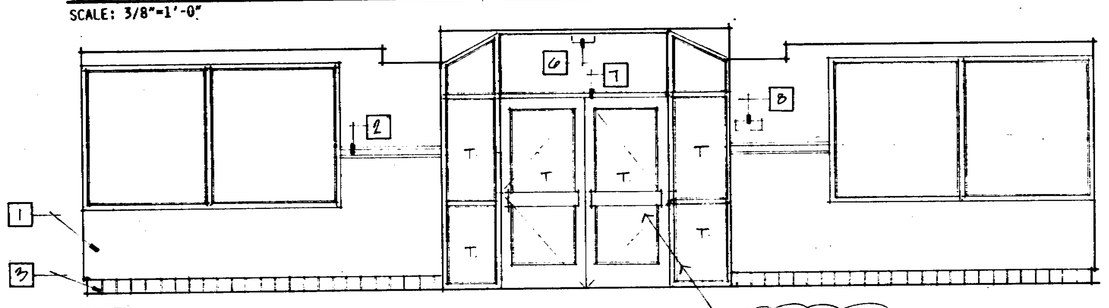

ROOM 101 DINING ROOM

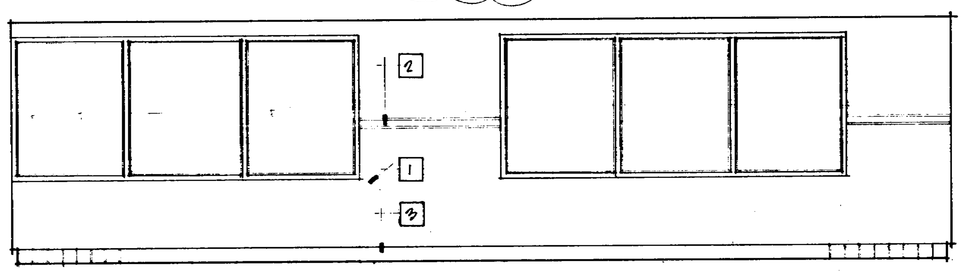

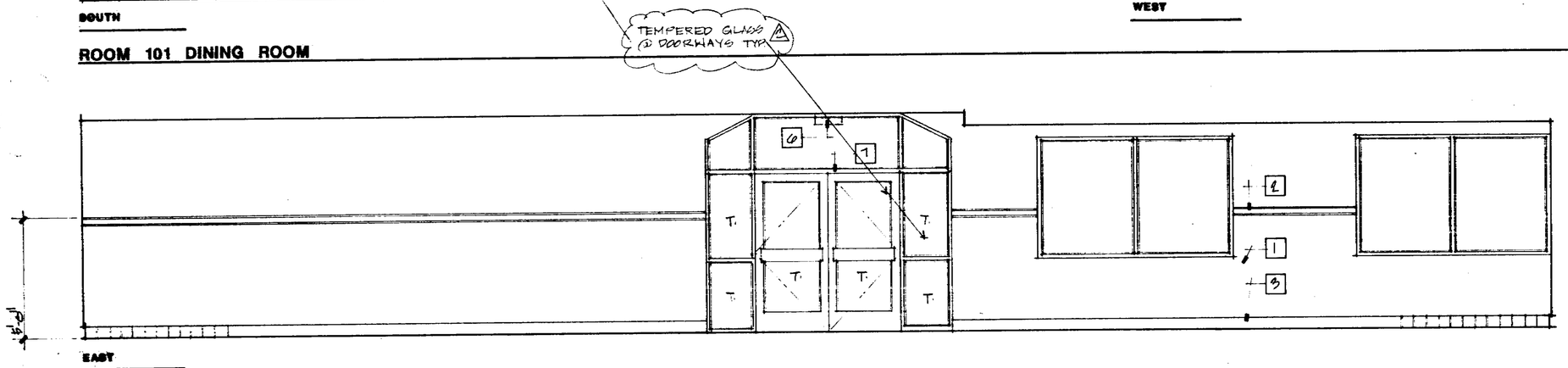

ROOM 101 DINING ROOM

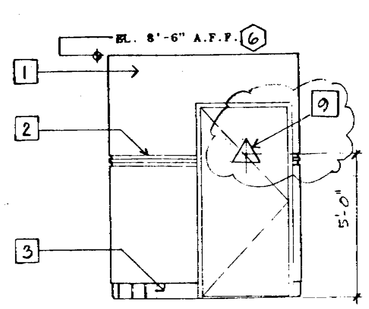

SOUTH ELEVATION (1)

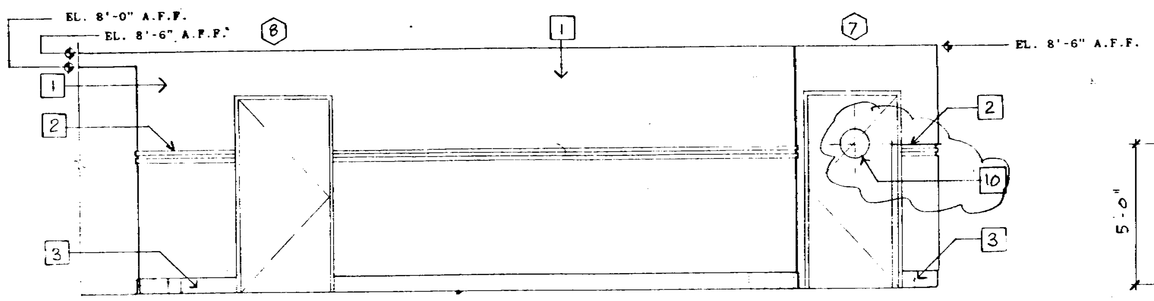

WEST ELEVATION (2)

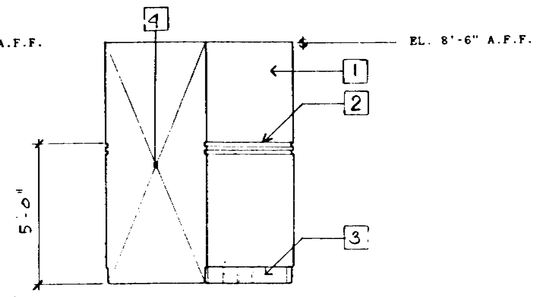

NORTH ELEVATION (3)

ROOM 113 HALL
SCALE: 3/8"=1'-0"

4
A6.1

SHEET NOTES:

1. 5/8" GYPSUM BOARD W/ LIGHT SKIP TROWEL FINISH.
2. 1 1/2" X 1 1/4" VERTICAL GRAIN WD. TRIM, PAINTED.
3. 6" QUARRY TILE BASE.
4. OPEN TO BEYOND.
5. "ALMOND SLATE" TEXTURED PLASTIC LAMINATE.
6. ILLUMINATED EXIT SIGN - REFER TO ELECTRICAL DWGS.
7. VINYL DIE CUT LETTERS: "THESE DOORS TO REMAIN UNLOCKED DURING BUSINESS HOURS."
8. ROOM OCCUPANCY SIGN SUBMITTED TO ARCHITECT FOR APPROVAL - REQUIRED BY CODE. ("74 MAXIMUM OCCUPANT LOAD") (1)
9. "MEN" SIGN - EQUILATERAL TRIANGLE 1'-0"/SIDE, 1/4" THICK CENTER ON DOOR @ +5'-0" AFF.
10. "WOMEN" SIGN - CIRCLE - 12" ϕ, 1/4" THICK CENTER ON DOOR @ +5'-0" AFF. (2)
11. TILE 4x4 (4)

70673-1976

12

INTERIOR ELEVATIONS

REVISIONS	BY
(1) FIRE	MS
(2) 11-17-87	PB
(4) 1-19-88	DA

Backhaus Associates
Architecture - Landscape Architecture - Planning
844 Seventeenth Avenue Santa Cruz, California 95062 408-482-1870

REGISTERED ARCHITECT MARK V. SUNDBERG C-11038 STATE OF CALIFORNIA

Job Name:
TACO BELL
ALUM ROCK AVE.
SAN JOSE, CA

DRAWN
CHECKED
DATE
SCALE
JOB NO.
SHEET
A6.1
OF SHEETS

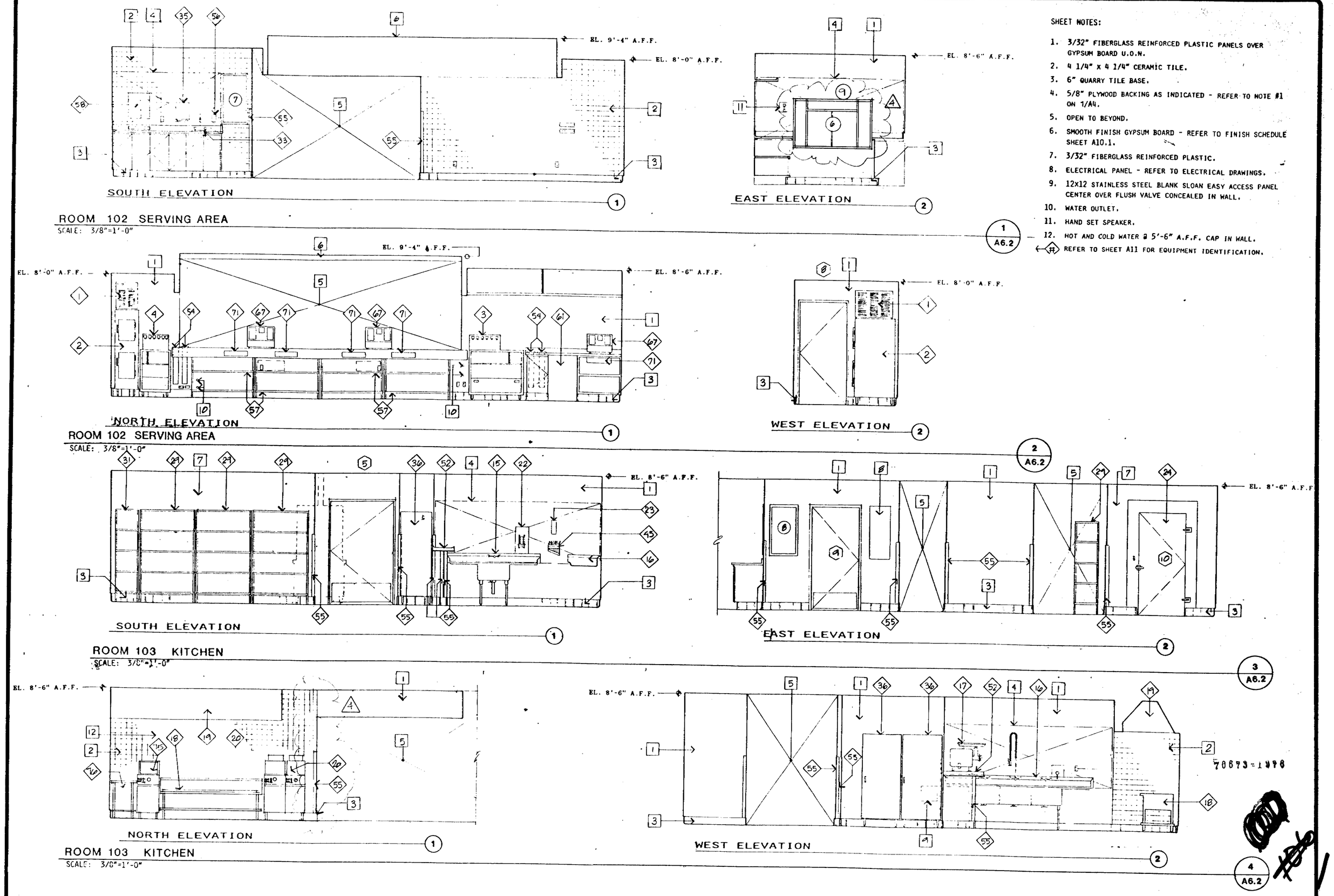

SHEET NOTES:

1. 3/32" FIBERGLASS REINFORCED PLASTIC PANELS OVER GYPSUM BOARD U.O.N.
2. 4 1/4" x 4 1/4" CERAMIC TILE.
3. 6" QUARRY TILE BASE.
4. 5/8" PLYWOOD BACKING AS INDICATED - REFER TO NOTE #1 ON 1/A4.
5. OPEN TO BEYOND.
6. SMOOTH FINISH GYPSUM BOARD - REFER TO FINISH SCHEDULE SHEET A10.1.
7. 3/32" FIBERGLASS REINFORCED PLASTIC.
8. ELECTRICAL PANEL - REFER TO ELECTRICAL DRAWINGS.
9. 12x12 STAINLESS STEEL BLANK SLOAN EASY ACCESS PANEL CENTER OVER FLUSH VALVE CONCEALED IN WALL.
10. WATER OUTLET.
11. HAND SET SPEAKER.
12. HOT AND COLD WATER @ 5'-6" A.F.F. CAP IN WALL.

(#) REFER TO SHEET A11 FOR EQUIPMENT IDENTIFICATION.

INTERIOR ELEVATIONS

REVISIONS
A 1-19-88

Backhaus Associates
Architecture - Landscape Architecture - Planning
844 Seventeenth Avenue Santa Cruz, California 95062 408-462-1870

REGISTERED ARCHITECT
MARK V. SUNDBERG
C-11038
STATE OF CALIFORNIA

Job Name:
TACO BELL
ALUM ROCK AVE.

DRAWN
CHECKED
DATE
SCALE
JOB NO.
SHEET
A6.2
OF SHEET

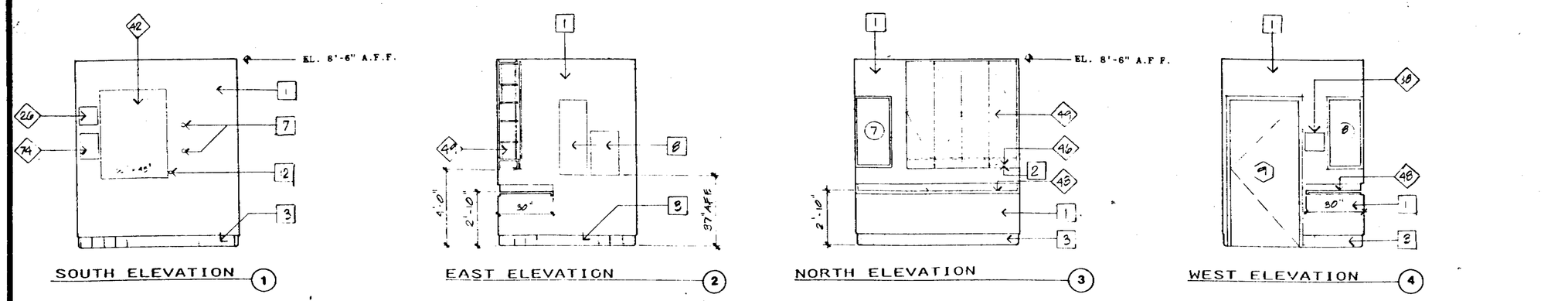

ROOM 104 OFFICE
SCALE: 3/8"=1'-0"
1 A6.3

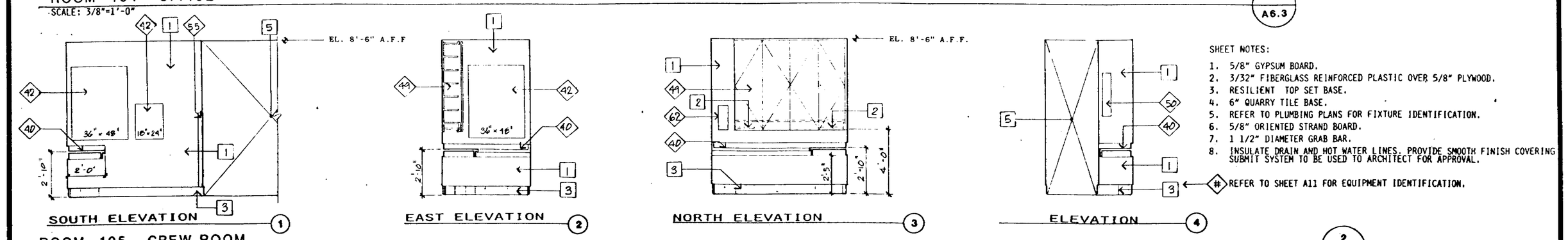

SHEET NOTES:

1. 5/8" GYPSUM BOARD.
2. 3/32" FIBERGLASS REINFORCED PLASTIC OVER 5/8" PLYWOOD.
3. RESILIENT TOP SET BASE.
4. 6" QUARRY TILE BASE.
5. REFER TO PLUMBING PLANS FOR FIXTURE IDENTIFICATION.
6. 5/8" ORIENTED STRAND BOARD.
7. 1 1/2" DIAMETER GRAB BAR.
8. INSULATE DRAIN AND HOT WATER LINES. PROVIDE SMOOTH FINISH COVERING SUBMIT SYSTEM TO BE USED TO ARCHITECT FOR APPROVAL.

REFER TO SHEET A11 FOR EQUIPMENT IDENTIFICATION.

ROOM 105 CREW ROOM
SCALE: 3/8"=1'-0"
2 A6.3

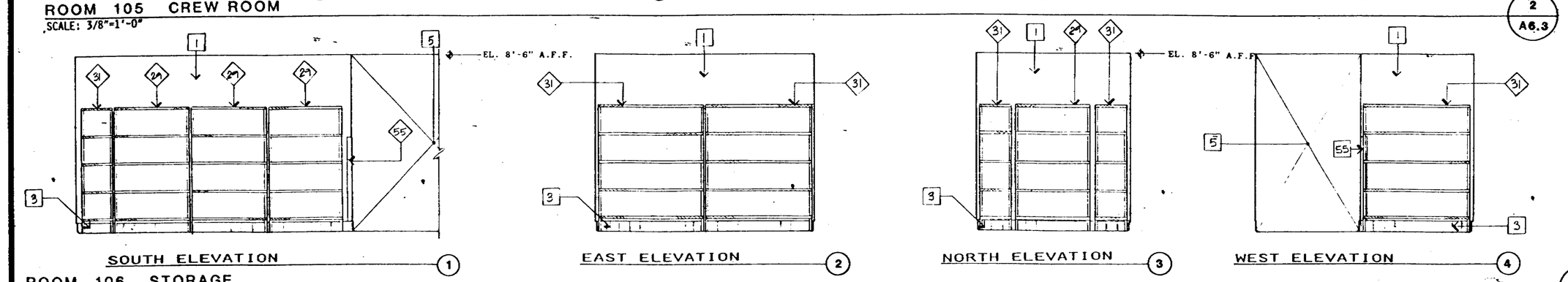

ROOM 106 STORAGE
SCALE: 3/8"=1'-0"
3 A6.3

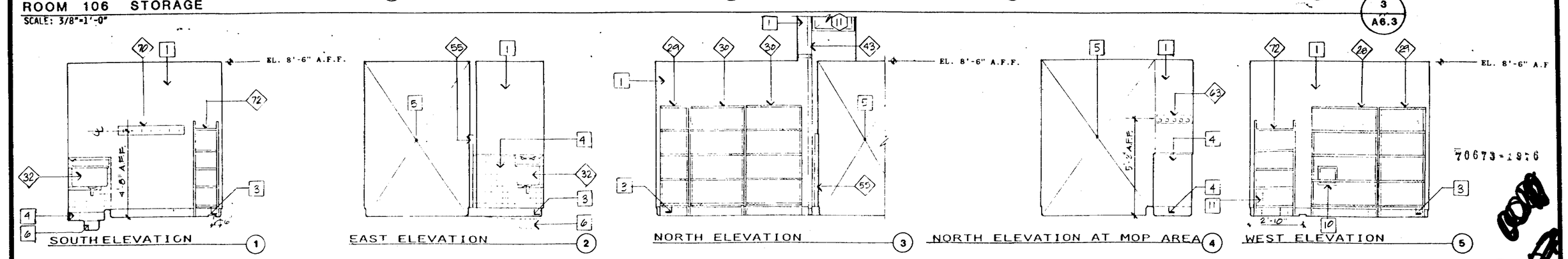

70673-1976

ROOM 108 UTILITY
SCALE: 3/8"=1'-0"
4 A6.3

INTERIOR ELEVATIONS

REVISIONS	BY

Backhaus Associates
Architecture - Landscape Architecture - Planning
844 Seventeenth Avenue Santa Cruz, California 95062 408-462-1870

REGISTERED ARCHITECT MARK V. SUNDSTEDT C-11038 STATE OF CALIFORNIA

Job Name:
TACO BELL
ALUM ROCK AVE.
SAN JOSE, CA

DRAWN
CHECKED
DATE
SCALE
JOB NO.
SHEET
A6.3
OF SHEET

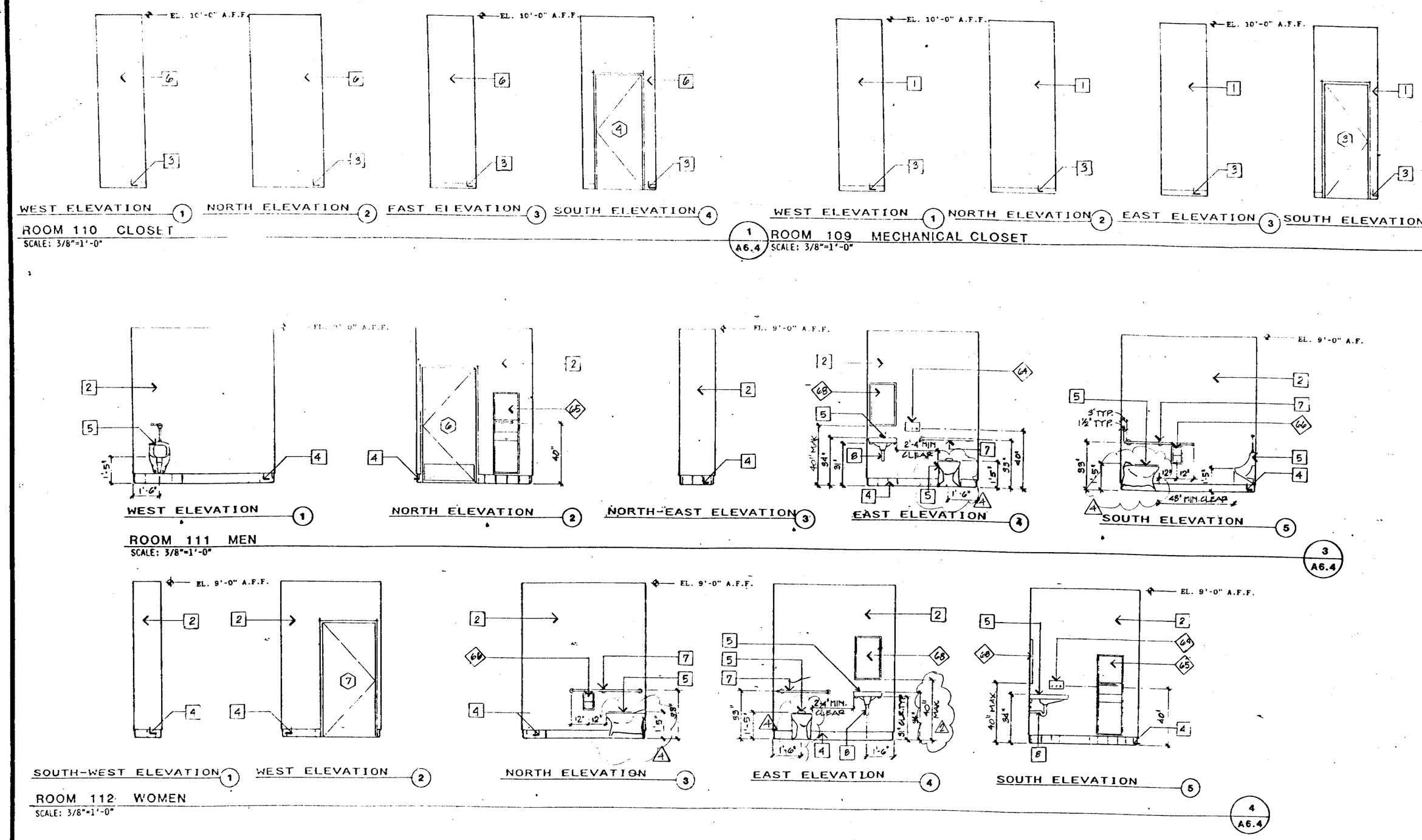

70673-1976

INTERIOR ELEVATIONS

REVISIONS	BY
2 11-17-87	PB
4 1-19-88	DA

Backhaus Associates
Architecture - Landscape Architecture - Planning
844 Seventeenth Avenue Santa Cruz, California 95062 408-462-1870

REGISTERED ARCHITECT K. SUNDBERG C-11038 STATE OF CALIFORNIA

Job Name:
TACO BELL
ALUM ROCK AVE.
SAN JOSE, CA

DRAWN	
CHECKED	
DATE	
SCALE	
JOB NO.	
SHEET	A6.4
OF	SHEETS

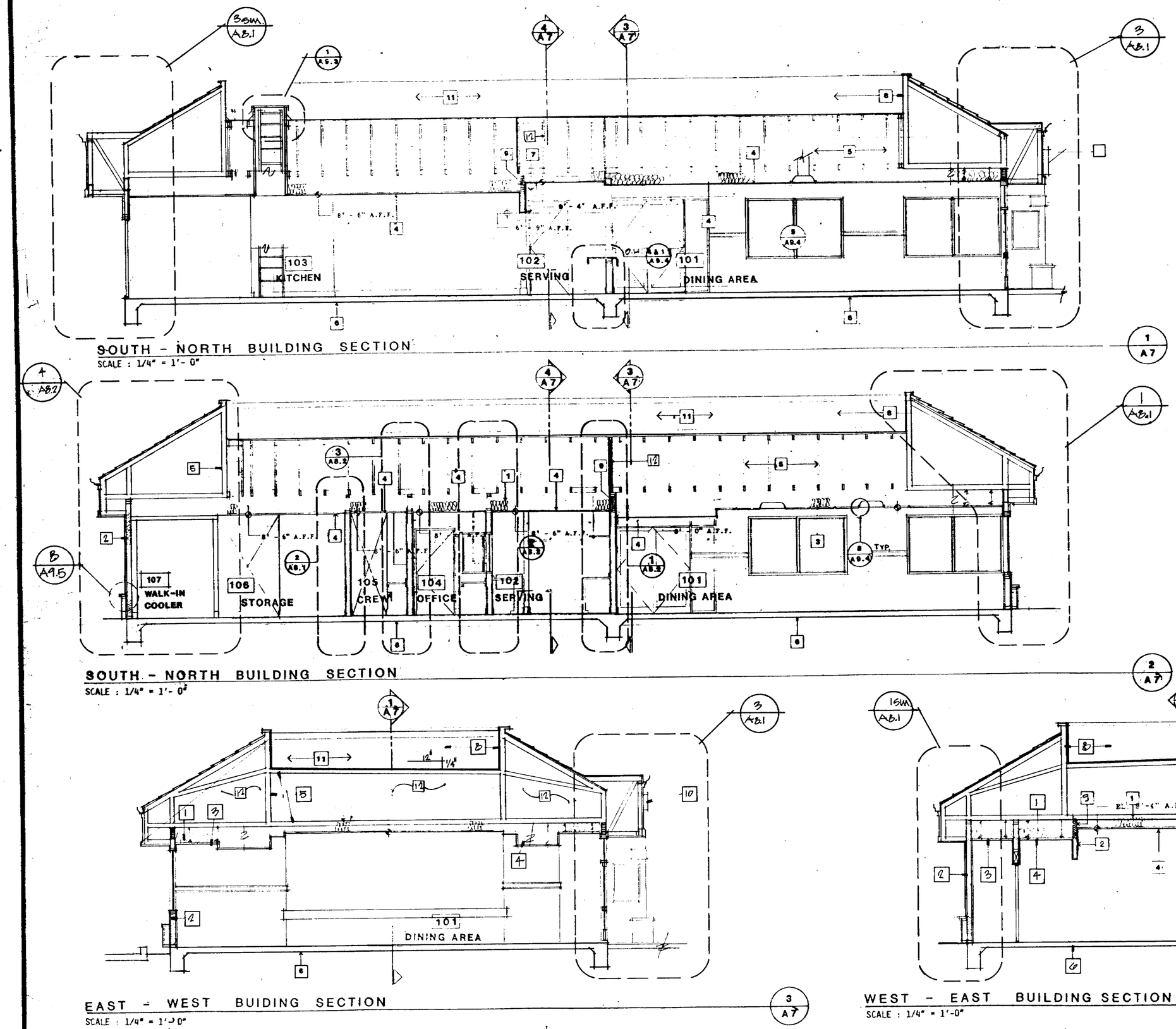

SOUTH - NORTH BUILDING SECTION
SCALE : 1/4" = 1'- 0"

SOUTH - NORTH BUILDING SECTION
SCALE : 1/4" = 1'- 0"

EAST - WEST BUIDING SECTION
SCALE : 1/4" = 1'-0"

WEST - EAST BUILDING SECTION
SCALE : 1/4" = 1'-0"

SHEET NOTES:

1. R-30 FOIL FACED FIBERGLASS BATT INSULATION.
2. R-19 FOIL FACED FIBERGLASS BATT INSULATION.
3. 2X2 SUSPENDED ACOUSTICAL GRID CEILING SYSTEM.
4. SUSPENDED GYPSUM BOARD CEILING SYSTEM.
5. ROOF TRUSSES - REFER TO STRUCTURAL DRAWINGS.
6. 4" CONCRETE SLAB - REFER TO STRUCTURAL SHEET S1.
7. MENU BOARD.
8. PARAPET WALL.
9. R-19 KRAFT FACED FIBERGLASS BATT INSULATION.
10. ILLUMINATED SIGNAGE.
11. HEIGHT OF ROOF EQUIPMENT: NOT TO EXCEED TOP OF PARAPET WALL - REFER TO SHEET M2 FOR EQUIPMENT LOCATIONS.
12. 5/8" GWB 'X' DRAFT STOP, 1 SIDE OF COLLECTOR TRUSS, FULL WIDTH & HEIGHT

BUILDING SECTIONS

REVISIONS	BY
1 FIRE	MS
2 1-19-88	DA

Backhaus Associates
Architecture - Landscape Architecture - Planning
844 Seventeenth Avenue Santa Cruz, California 95062 408-462-1876

REGISTERED PROFESSIONAL ENGINEER MARK V. SUNDBERG C-11038 JAN. 26 1988 STATE OF CALIFORNIA

Job Name:
TACO BELL
ALUM ROCK AVE.
SAN JOSE, CA

DRAWN
CHECKED
DATE
SCALE
JOB NO
SHEET
A7
OF SHEETS

70673-1976

16

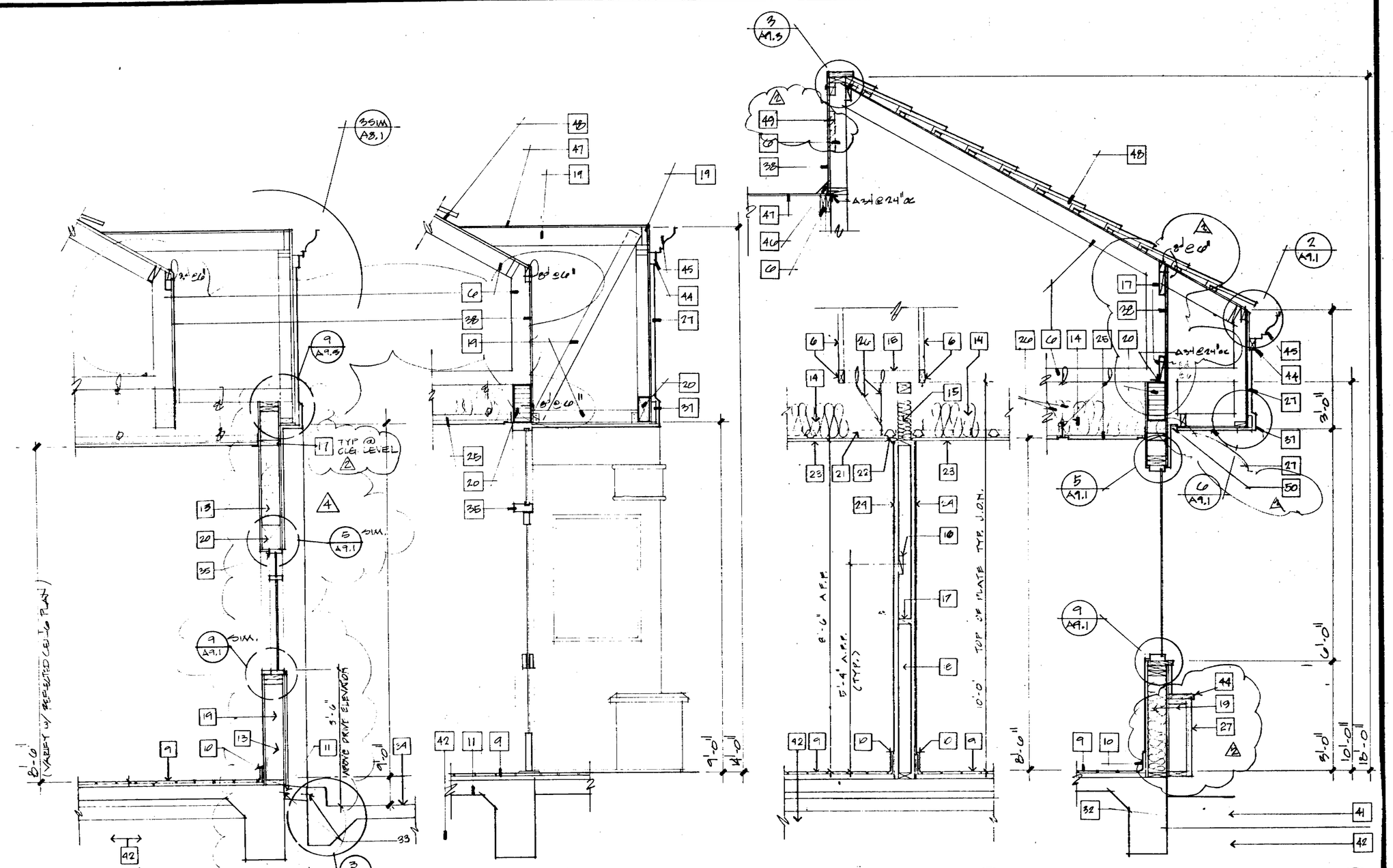

WALL SECTION 5 A8.1
SCALE 3/4"=1'-0"

WALL SECTION 4 A8.1
SCALE 3/4"=1'-0"

WALL SECTION 3 A8.1
SCALE 3/4"=1'-0"

WALL SECTION 2 A8.1
SCALE 3/4"=1'-0"

WALL SECTION 1 A8.1
SCALE 3/4"=1'-0"

SHEET NOTES:

1. SHEET METAL CAP FLASHING WITH CLEATS.
2. FLUORESCENT FIXTURE WITH MOUNTING BRACKETS.
3. ROOF DRAIN WITH OVERFLOW DRAIN.
4. CONCRETE TILES OVER 'LIFETILE CORPS.' 'TYPAR 3C' SPUN BONDED POLYPROPELENE ROOFING UNDERLAYMENT.
5. VENT.
6. ROOF TRUSSES - REFER TO STRUCTURAL.
7. 4" ABS RAIN WATER LEADER.
8. A.D.S. NONPERFORATED DRAIN. BYPASS PLANTERS.
9. QUARRY TILE - REFER TO FINISH SCHEDULE SHEET A10.1.
10. 6" QUARRY TILE BASE - REFER TO FINISH SCHEDULE SHEET A10.1.
11. 4" CONCRETE SLAB.
12. 1 1/2" MIN. FOAM FILL.
13. R-19 FOILFACED FIBERGLASS BATT INSULATION.
14. R-30 FOILFACED FIBERGLASS BATT INSULATION.
15. R-19 KRAFT FACED FIBERGLASS BATT INSULATION.
16. 2x8 BLOCKING.
17. 2x BLOCKING.
18. 2x4 FRAMING.
19. 2x6 FRAMING.
20. HEADER - REFER TO STRUCTURAL DRAWINGS.
21. 1 1/2" METAL FRAMING CHANNEL 4'-0" O.C. MAX.
22. METAL FURRING CHANNEL @ 2'-0" O.C. MAX. - SECURE WITH FURRING CHANNEL CLIP OR EQUAL.
23. 5/8" GYPSUM BOARD.
24. FIBERGLASS REINFORCED PLASTIC - REFER TOFINISH SCHEDULE SHEET A10.1.
25. 2x2 TEGULAR SUSPENDED ACCOUSTICAL CEILING SYSTEM - REFER TO FINISH SCHEDULE SHEET A10.1, SHEET NOTE NUMBER 4.
26. RANGER WIRES.
27. 7/8" STUCCO OVER 3/8" PLYWOOD.
28. PLANTING SOIL MIX
29. 2" MULCH LAYER
30. ENKADRAIN MATTING WITH HEAT BONDED FILTER FABRIC - TYPE 9120.
31. 6" CONCRETE MASONRY UNIT WALL.
32. 4" PERFORATED DRAIN - CONNECT TO RWL OUTSIDE OF PLANTER.
33. WATERSTOP.
34. BLACK CONCRETE DRIVE
35. 1 3/4"x4" ANODIZED ALUMINUM FRAME - REFER TO SHEETS A 10.1 A 10.2
36. SEMI AUTOMATIC PASS THRU WINDOW - REFER TO 6/A9.4 WINDOW #8.
37. STUCCO FACE OVER 2X
38. 3/8" EXTERIOR PLYWOOD.
39. 7/8" STUCCO.
40. 1" RIGID INSULATION.
41. 90% COMPACTED EARTH.
42. UNDISTURBED EARTH.
43. EXTERIOR GRADE 5/8" TYPE 'X' GYP. BD. @ WEST EXTERIOR WALL ONLY.
44. EXPOSED 2X WOOD TRIM
45. OGEE GUTTER
46. 4" CANT STRIP.
47. ROOFING OVER PLYWOOD, SEE SHEET A 12
48. TILE ROOFING SEE SHEET A 12
49. LOUVERED ATTIC VENT W/INSECT SCREEN
50. CONTINUOUS SCREENED VENT

70673-1976

70673-1976

17

WALL SECTION DETAILS

REVISIONS	BY
2 11-17-87	PB
4 1-19-88	DA

Backhaus Associates
Architecture - Landscape Architecture - Planning
844 Seventeenth Avenue Santa Cruz, California 95062 408-462-1870

REGISTERED ARCHITECT
DARK V. SUNDBERG
C-11038
STATE OF CALIFORNIA

Job Name:
TACO BELL
ALUM ROCK AVE.
SAN JOSE, CA

DRAWN
CHECKED
DATE
SCALE
JOB NO.
SHEET
A8.1
OF SHEETS

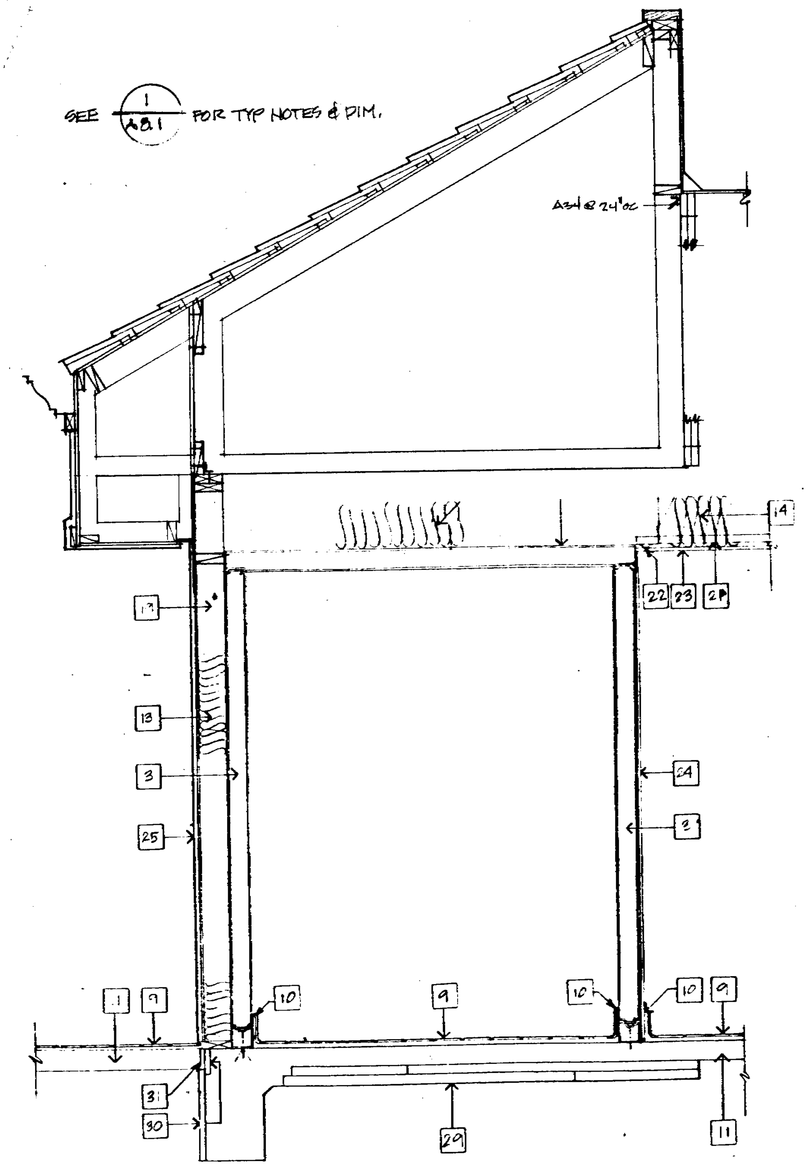

WALL SECTION 4/A8.2
SCALE 3/4"=1'-0"

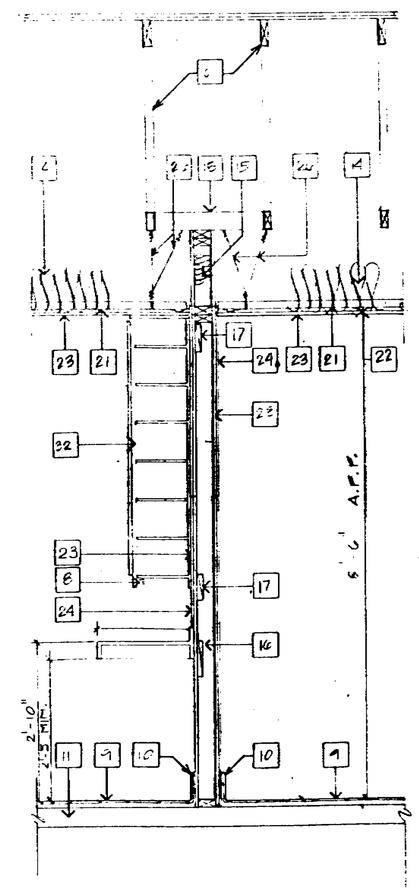

WALL SECTION 3/A8.2
SCALE 3/4"=1'-0"

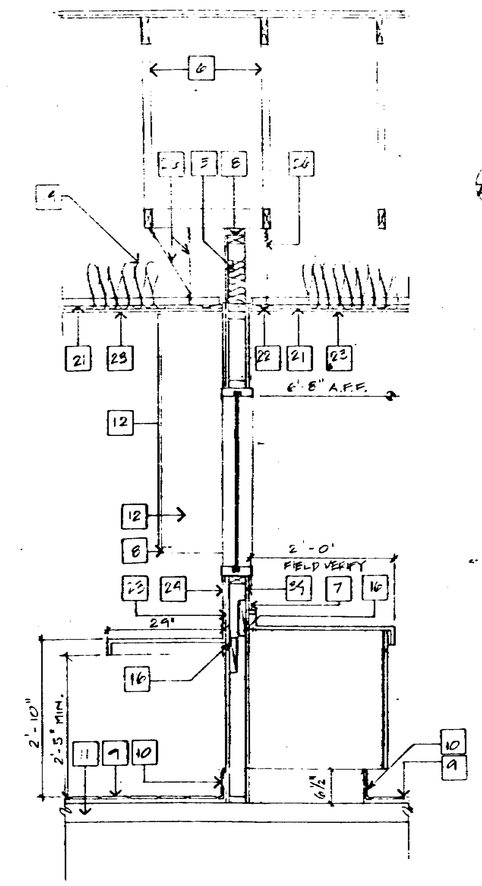

WALL SECTION 2/A8.2
SCALE 3/4"=1'-0"

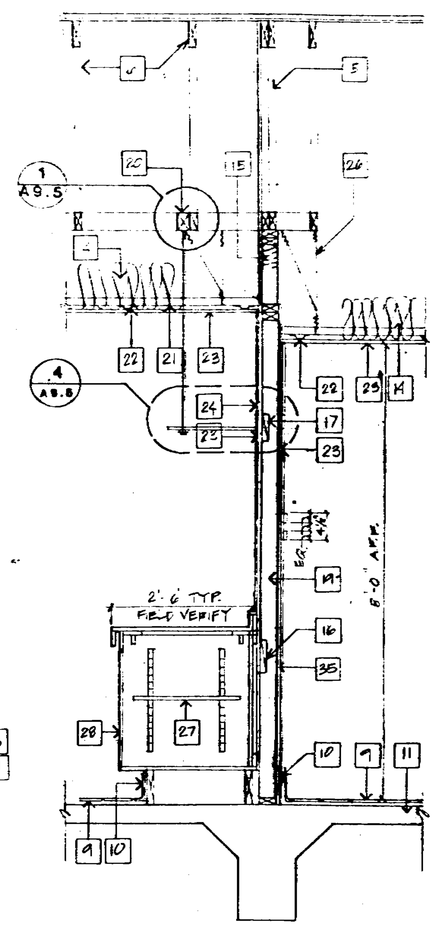

WALL SECTION 1/A8.2
SCALE 3/4"=1'-0"

SHEET NOTES:

1. SHEET METAL CAP FLASHING WITH CLEATS.
2. FLOURESCENT FIXTURE WITH MOUNTING BRACKETS.
3. VOLRATH PRE-FAB WALK-IN COOLER.
4. CONCRETE TILES OVER 'LIFETILE CORPS' 'TYPAR 30' SPUN BONDED POLYPROPELENE ROOFING UNDERLAYMENT.
5. COLLECTOR TRUSS - REFER TO STRUCTURAL.
6. ROOF TRUSSES - REFER TO STRUCTURAL.
7. CERAMIC TILE - REFER TO FINISH SCHEDULE SHEET A-10.1
8. LIGHT UNDERNEATH OVERHEAD CABINET - REFER TO ELECTRICAL.
5. QUARRY TILE - REFER TO FINISH SCHEDULE SHEET A-10.1
10. 6" QUARRY TILE BASE - REFER TO FINISH SCHEDULE SHEET A-10.1
11. 4" CONCRETE SLAB.
12. OVERHEAD CABINET BEYOND.
13. R-19 FOILFACED FIBERGLASS BATT INSULATION.
14. R-30 FOILFACED FIBERGLASS BATT INSULATION.
15. R-19 KRAFT FACED FIBERGLASS BATT INSULATION.
16. 2 X 8 BLOCKING.
17. 2 X BLOCKING. REFER TO SHEET 2/A4
18. 2 X 4 FRAMING.
19. 2 X 6 FRAMING.
20. 3 X 4 FRAMING.
21. 1 1/2" METAL FRAMING CHANNEL 4'-0" O.C. MAX
22. METAL FURRING CHANNEL @ 2'-0" O.C. MAX.
23. 5/8" TYPE 'X' GYPSUM BOARD.
24. 3/32" FIBER REINFORCED PLASTIC PANELS - REFER TO FINISH SCHEDULE SHEET A-10.1
25. 7/8" STUCCO OVER 3/8" PLYWOOD.
26. HANGER WIRES.
27. 3/4" PLYWOOD ADJUSTABLE SHELF W/EDGE BAND, PLASTIC LAMINATE & PLASTIC LAMINATE BALANCING SHEETS - SUBMIT SHOP DRAWINGS FOR APPROVAL, WHERE OCCURS.
28. 3/4" PLYWOOD CAB W/PLASTIC LAMINATE, BALANCING SHEETS. CONSEALED HINGES AND PRESSURE RELEASE DOOR LATCHES - SUBMIT SHOP DRAWINGS FOR APPROVAL.
29. 2 LAYERS 2" RIGID INSULATION, STAGGER PANEL JOINTS.
30. 1" RIGID INSULATION.
31. 1/2" JOINT FILLER
32. 3/4" PLYWOOD CABINET W/ 8" X 8" COMPARTMENTS. FACE WITH PLASTIC LAMINATE AND BALANCING SHEETS. PRESSURE RELEASE LATCHES AND CONCEALED HINGES - SUBMIT SHOP DRAWINGS FOR APPROVAL.
33. 3/4" PLYWOOD COUNTER W/ PLASTIC LAMINATE, BALANCING SHEETS - SUBMIT SHOP DRAWINGS FOR APPROVAL.
34. 5/8" GYP. BD. W/ PLYWOOD WHERE OCCURS - REFER TO INTERIOR ELEVATIONS.
35. 5/8" PLYWOOD SPACERS @ STUDS AND BLOCKING.

70673-1976 18

WALL SECTION DETAILS

REVISIONS	BY

Backhaus Associates
Architecture - Landscape Architecture - Planning
844 Seventeenth Avenue Santa Cruz, California 95062 408-457-1970

REGISTERED ARCHITECT MARK V. SUNDSTROM C-11038 STATE OF CALIFORNIA

Job Name:
TACO BELL
ALUM ROCK AVE.
SAN JOSE, CA

DRAWN
CHECKED
DATE
SCALE
JOB NO
SHEET
A8.2
OF SHEETS

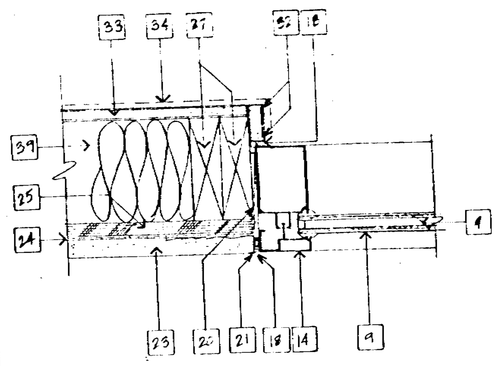

WINDOW JAMB/HEAD SIMILAR (1 / A9.1)
SCALE: 3" = 1'- 0"

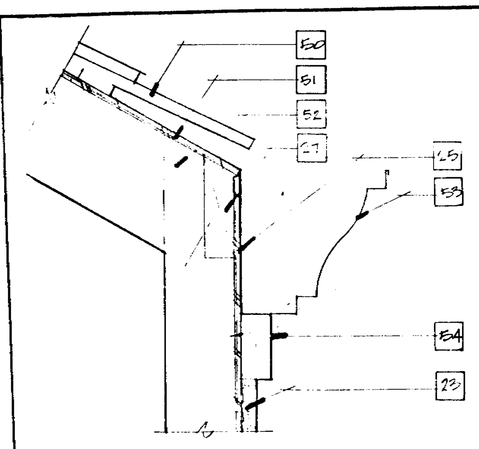

CAP DETAIL (2 / A9.1)
3"=1'-0"

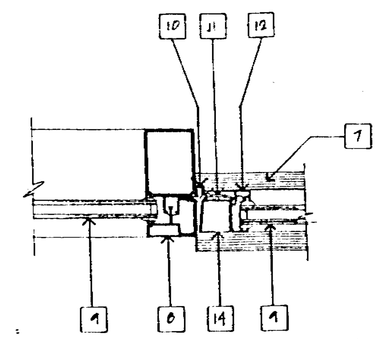

DOOR/WINDOW JAMB (3 / A9.1)
SCALE: 3" = 1'- 0"

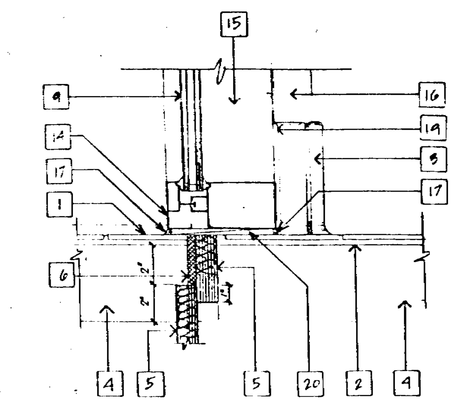

SILL WINDOW (4 / A9.1)
SCALE: 3" = 1'- 0"

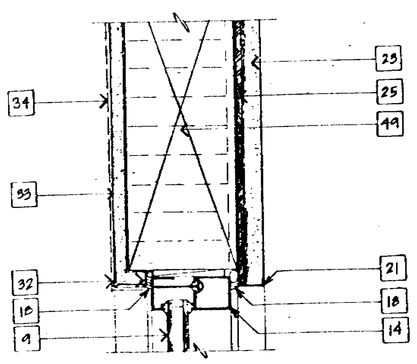

WINDOW HEAD/JAMB SIM. (5 / A9.1)
SCALE: 3" = 1'- 0"

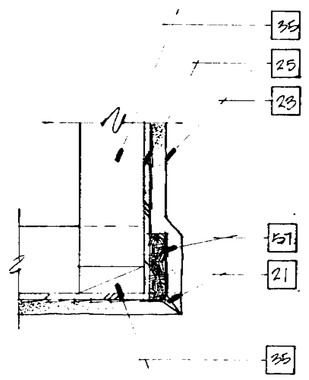

SOFFET DETAIL (6 / A9.1)
3"=1'-0"

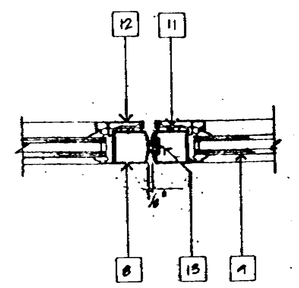

ASTRAGAL AT DOOR STILES (7 / A9.1)
SCALE: 3" = 1'- 0"

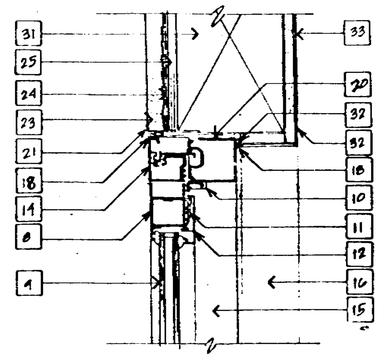

HEAD AT DOOR (8 / A9.1)
SCALE: 3" = 1'- 0"

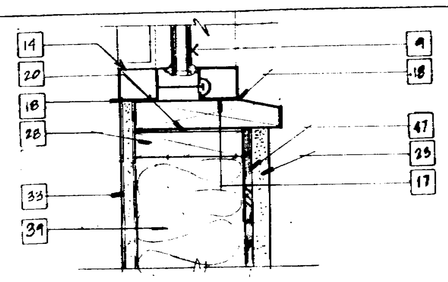

WINDOW SILL (9 / A9.1)
SCALE: 3" = 1'- 0"

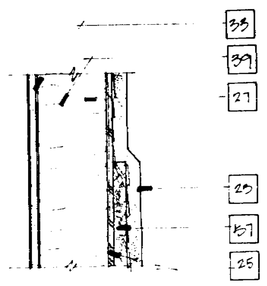

RECESS DETAIL (10 / A9.1)
3"=1'-0"

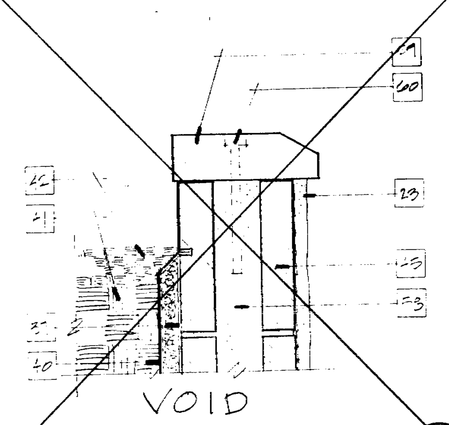

VOID

PLANTER WALL CAP (11 / A9.1)

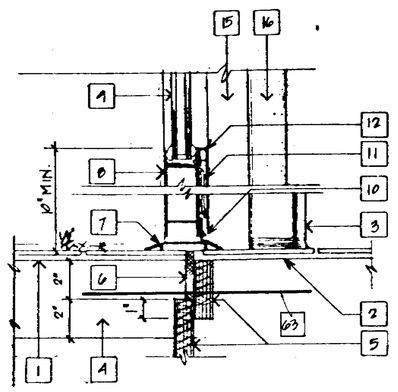

THRESHOLD AT DOOR (12 / A9.1)
SCALE: 3" = 1'- 0"

SHEET NOTES:

1. QUARRY TILE ON MORTAR BED.
2. THIN SET QUARRY TILE
3. QUARRY TILE BASE BEYOND.
4. CONCRETE SLAB - REFER TO STRUCTURAL DRAWINGS.
5. 1" RIGID INSULATION @ BUILDING PERIMETER.
6. 1/2" JOINT FILLER @ BUILDING PERIMETER & EXTERIOR CONCRETE.
7. ANODIZED ALUMINUM THRESHOLD. COLOR TBD BY OWNER.
8. ANODIZED ALUMINUM FRAME - TYP.
9. TEMPERED INSULATING GLASS ASSEMBLY WITH MATCHING COLOR THERMALBREAK AND INTERNAL DESICCANT - TYP.
10. WEATHER STRIPPING.
11. PVC SEPARATOR - TYP.
12. MATCHING ANODIZED ALUMINUM DOOR CLADDING - TYP
13. ASTRAGAL.
14. THERMALBREAK ANODIZED ALUMINUM FRAME.
15. THERMALBREAK ANODIZED ALUMINUM FRAME BEYOND.
16. WALL BEYOND.
17. SEALANT.
18. SEALANT AND BACKER ROD
19. SEALANT BEYOND @ BASE.
20. 1/4" SHIM.
21. 7/8" STUCCO GROUND. NI.ON 3/4" @ ALL METAL FRAMES FOR SEALANT & BACKER ROD.
22. 3 1/4" STUCCO GROUND - ATTACH TO BACK OF PLYWOOD & MLITCH WITH LEVEL OF STUCCO BEYOND @ CMU PLANTER WALL.
23. 7/8" STUCCO ON "A-LATH CORP." "STUCCO-BITE" LATH AND BACKING - TYP.
24. "TYVEK" AIR INFILTRATION BARRIER OR APPROVED EQUAL.
25. 3/8" EXTERIOR PLYWOOD.
26. 1 1/8" EXTERIOR PLYWOOD.
27. 2 x 6 WOOD FRAMING.
28. THIN 2 X 6 FRAMING TO ALLOW FOR THICKNESS OF MEMBRANE WHERE OCCURS @ PLANTERS.
29. THIN 2 X 6 FRAMING TO ALLOW FOR THICKNESS OF PLYWOOD AND MEMBRANE WHERE OCCURS AT PLANTERS.
30. 2 x 6 BLOCKING.
31. WOOD HEADER - REFER TO STRUCTURAL.
32. METAL GYPSUM BOARD TRIM BEAD. NI.ON 3/4" @ ANODIZED ALUMINUM JAMBS WHERE OCCURS FOR SEALANT & BACKER ROD - TYP.
33. 5/8" TYPE "X" GYPSUM BOARD.
34. 3/4" x 3 1/2" VERTICAL GRAIN PAINTED WOOD TRIM & JAMB- REFER TO INTERIOR ELEVATION FOR MOUNTING HEIGHTS.
35. 2 x WOOD FRAMING.
36. 2 - LAYERS 3/8" EXTERIOR PLYWOOD.
37. "ALA PRODUCTS" BE SEALER MEMBRANE.
38. FILL VOID WITH FIBERGLASS BATT INSULATION.
39. R-25 FOIL FACED FIBERGLASS BATT INSULATION.
40. "DRAINLINE" SUBSURFACE DRAINAGE MATTING - TRIM BACK BLACK MESH & CONTINUE WHERE FILTER FABRIC TO EXTENT OF BE SEALER MEMBRANE ABOVE TOP OF PLANTING SOIL MIX.
41. PLANTING SOIL MIX.
42. 2" MASON LAYER.
43. 2 x 8 C.M.U. CAP BLOCK.
44. 8 x 8 C.M.U.
45. 6" C.M.U. WALL.
46. 2 x 8, GLUE AND SCREW TO 3/8" EXTERIOR PLYWOOD.
47. 3/8" EXTERIOR PLYWOOD SCALLOP TO 3/8" x TEK'SM PLYWOOD @ WALL ABOVE TOP LEVEL OF CMU PLANTER WALL.
48. 2 LAYERS 3/4" EXTERIOR PLYWOOD GLUE TOGETHER & THEN SCREW TO 1 1/8" EXTER 4M PLYWOOD.
49. GLUE LAM BEAM WITH 3/4" PLYWOOD SPACER - REFER TO STRUCTURAL
50. TILE ROOF, SEE SHEET A-12.
51. PLYWOOD ROOF SHEATHING, SEE S-2.
52. ROOF TRUSS.
53. 24 GA. G.I. SHEET. METAL GUTTER.
54. 2 x 6 EXPOSED REDWOOD TRIM.
55. STUCCO OVER 1x.
56. STUCCO SCREED.
57. 3/4" PARTICAL BOARD.
58. SOLID GROUT.
59. 3 x 8 REDWOOD CAP.
60. 3/4" ANCHOR BOLTS AT 48" O.C.
61. EXPOSED 2 x 10 REDWOOD.
62. 1" DIAMETER HALF ROUND REDWOOD.
63. 3/4" ANCHOR BOLTS AT 12" O.C. OF PENETRATION INTO REF. BEAM.

70673-1978

DETAILS

REVISIONS	BY

Backhaus Associates
Architecture – Landscape Architecture – Planning
844 Seventeenth Avenue Santa Cruz, California 95062 408-462-1870

MARK A. SUELZLE
C-11038
JAN 26 1987

Job Name:
TACO BELL
ALUM ROCK AVE.
SAN JOSE, CA

DRAWN	
CHECKED	
DATE	
SCALE	
JOB NO.	
SHEET	A9.1
OF	SHEETS

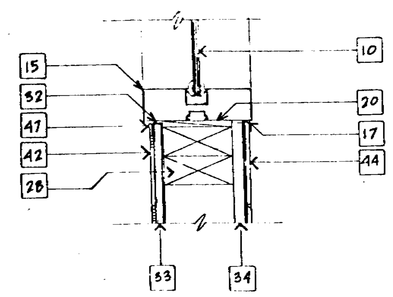

SILL AT WDW./HEAD & JAMB SIM. (1 / A9.2)
SCALE: 3" = 1'- 0"

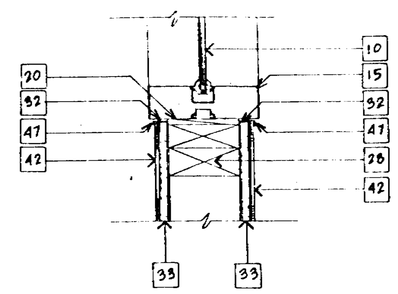

SILL AT WDW./HEAD & JAMB SIM. (2 / A9.2)
SCALE: 3" = 1'- 0"

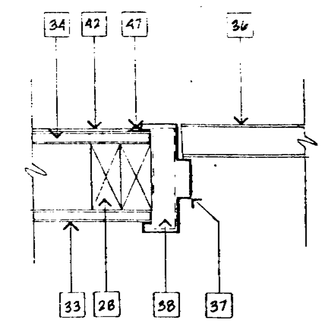

JAMB/HEAD SIMILAR (3 / A9.2)
SCALE: 3" = 1'- 0"

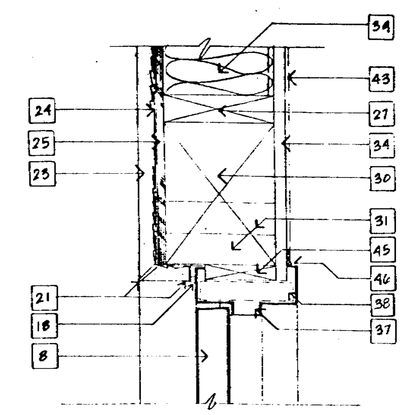

HEAD AT DOOR/JAMB SIM. (4 / A9.2)
SCALE: 3" = 1'- 0"

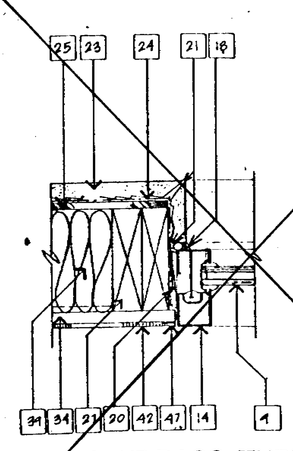

JAMBS AT PASS-THRU WDW. SIDE LIGHT (5 / A9.2)
SCALE: 3" = 1'- 0"

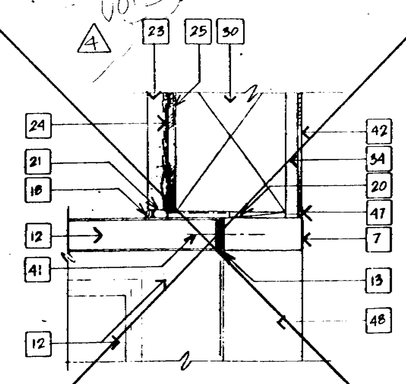

HEAD AT PASS-THRU WINDOW (6 / A9.2)
SCALE: 3" = 1'- 0"

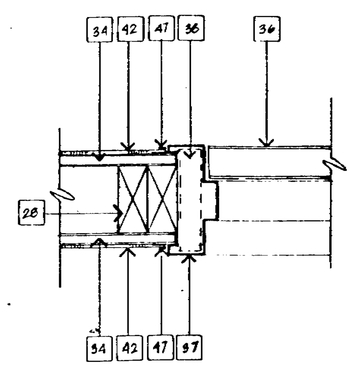

JAMB/HEAD SIMILAR (7 / A9.2)
SCALE: 3" = 1'- 0"

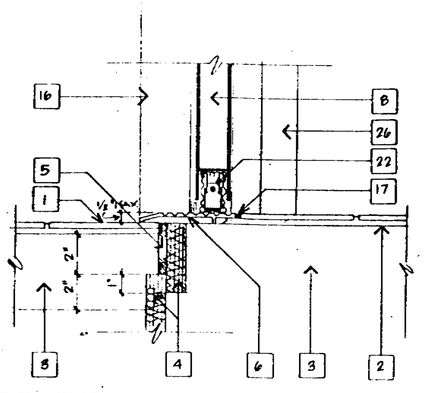

THRESHOLD AT DOOR (8 / A9.2)
SCALE: 3" = 1'- 0"

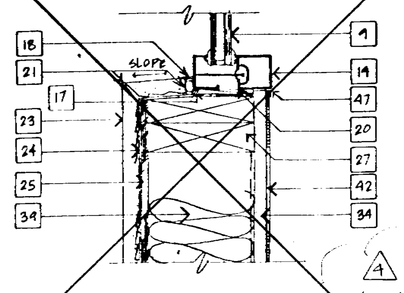

SILL AT PASS-THRU WDW. SIDE LIGHT (9 / A9.2)
SCALE: 3" = 1'- 0"

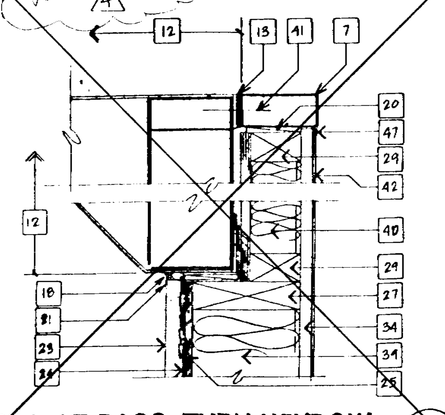

SILL AT PASS-THRU WINDOW (10 / A9.2)
SCALE: 3" = 1'- 0"

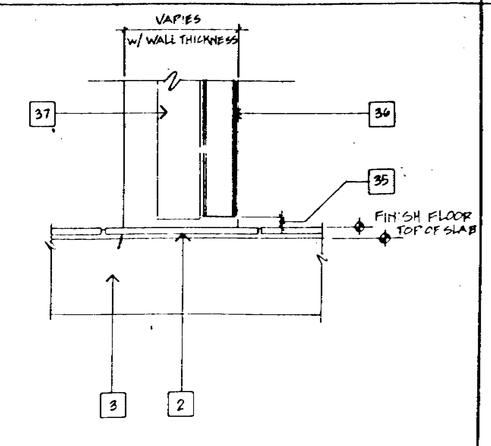

SILL AT INTERIOR DOOR (11 / A9.2)
SCALE: 3" = 1'- 0"

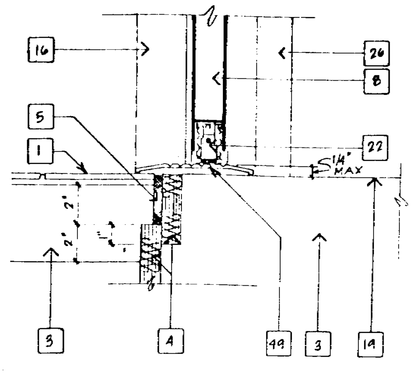

THRESHOLD AT DOOR (12 / A9.2)
SCALE: 3" = 1'- 0"

SHEET NOTES:

1. QUARRY TILE ON MORTAR BED.
2. THIN SET QUARRY TILE.
3. CONCRETE SLAB - REFER TO STRUCTURAL DRAWINGS.
4. 3" RIGID INSULATION @ BUILDING PERIMETER.
5. 1/2" JOINT FILLER @ BUILDING PERIMETER & EXTERIOR CONCRETE.
6. ANODIZED ALUMINUM THRESHOLD. [illegible] (REESE)
7. 1 3/4" X 4" ANODIZED ALUMINUM FRAME.
8. HOLLOW METAL DOOR - REFER TO DOOR SCHEDULE.
9. [illegible] - MATCHING COLOR [illegible] INTERIOR & EXTERIOR DESIGNATION - TYP.
10. 1/4" TEMPERED GLASS.
11. [illegible] STRAPPING.
12. "FRAZIER METAL MANUFACTURING CO." PREMANUFACTURED ANODIZED ALUMINUM SEMI-AUTOMATIC PASS-THRU WINDOW UNIT.
13. WEATHER STRIPPING AS ALLOWED BY PASS-THRU WINDOW MANUFACTURER.
14. THERMA-BREAK ANODIZED ALUMINUM FRAME.
15. ANODIZED ALUMINUM FRAME.
16. WALL BEYOND.
17. SEALANT.
18. SEALANT & BACKER ROD.
19. TOP OF CONCRETE SLAB.
20. 1/4" SHIM.
21. 7/8" STUCCO GROUND - TYP. FASTEN 1/4" @ ALL METAL FRAMES FOR SEALANT & BACKER ROD.
22. REESE # 371 MORTISED AUTOMATIC DOOR BOTTOM WHERE OCCURS - REFER TO DOOR SCHEDULE.
23. 7/8" STUCCO ON "K-LATH COMP." " STUCCO-RITE" LATH & BACKING - TYP.
24. "TYVEK" AIR INFILTRATION BARRIER OR APPROVED EQUAL.
25. 5/8" EXTERIOR PLYWOOD.
26. HOLLOW METAL FRAME BEYOND.
27. 2X6 FRAMING.
28. 2X FRAMING - REFER TO FLOOR PLAN.
29. 2X FRAMING.
30. 6X WOOD HEADER - REFER TO STRUCTURAL.
31. 2X6 FRAMING @ JAMB.
32. METAL GYPSUM BOARD TRIM BEAD.
33. 5/8" TYPE "X" GYPSUM BOARD.
34. 5/8" TYPE "X" GYPSUM BOARD OR 5/8" PLYWOOD OR 5/8" ORIENTED STRAND BOARD - REFER TO FINISH SCHEDULE & FOR INTERIOR ELEVATIONS.
35. UNDERCUT DOOR 5/8".
36. WOOD DOOR - REFER TO FINISH SCHEDULE.
37. HOLLOW METAL FRAME.
38. JAMB ANCHOR, WHERE OCCURS.
39. R-19 FOILFACED FIBERGLASS BATT INSULATION.
40. R-11 FOILFACED FIBERGLASS BATT INSULATION.
41. MOUNTING BOLT FOR PASS-THRU WINDOW.
42. FIBERGLASS REINFORCED PLASTIC PANEL.
43. FIBERGLASS REINFORCED PLASTIC PANEL - WHERE OCCURS.
44. 4 3/4" X 4 1/4" CERAMIC TILE - REFER TO FINISH SCHEDULE.
45. 2X6 FRAMING.
46. FIBERGLASS REINFORCED PLASTIC PANEL TRIM WHERE OCCURS.
47. FIBERGLASS REINFORCED PLASTIC PANEL TRIM.
48. 1 3/4" X 4" ANODIZED ALUMINUM FRAME BEYOND.
49. ANODIZED ALUMINUM THRESHOLD [illegible] (REESE).

70673-1876

#B-20

DETAILS

REVISIONS	BY
1-19-88	DK

Backhaus Associates
Architecture - Landscape Architecture - Planning
844 Seventeenth Avenue Santa Cruz, California 95062 408-462-1870

REGISTERED ARCHITECT MARK V. SUNDBERG C-11038 JAN 26 1988 STATE OF CALIFORNIA

Job Name:
TACO BELL
ALUM ROCK AVE.
SAN JOSE, CA

DRAWN	
CHECKED	
DATE	
SCALE	
JOB NO.	
SHEET	A9.2
OF	SHEETS

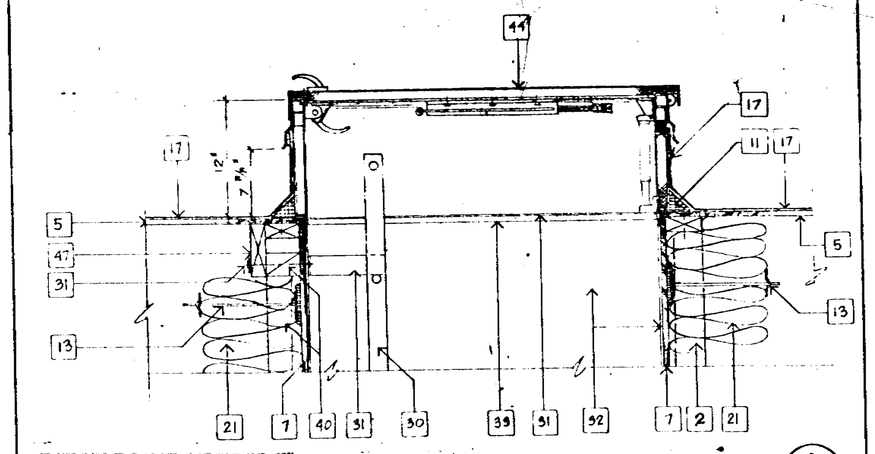

SCALE: 1 1/2" = 1' - 0"

2 / A9.3

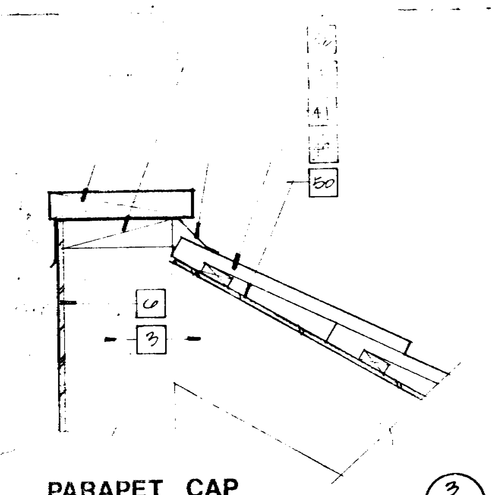

PARAPET CAP

3"=1'-0"

3 / A9.3

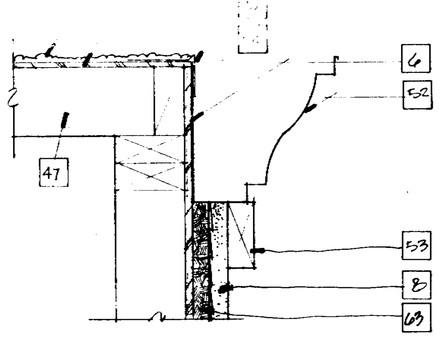

CAP DETAIL

3"=1'-0"

4 / A9.3

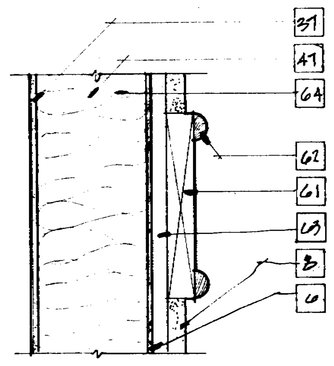

WALL TRIM

3"=1'-0"

12 / A9.3

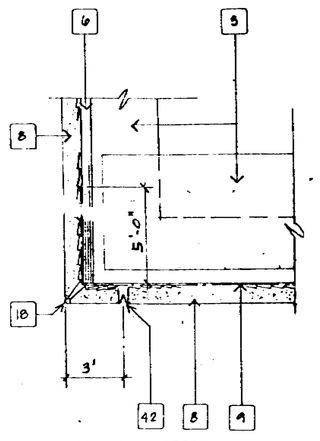

SOFFIT DETAIL

SCALE: 3" = 1' - 0"

6 / A9.3

ROOF DRAIN DETAIL

SCALE: 3" = 1' - 0"

7 / A9.3

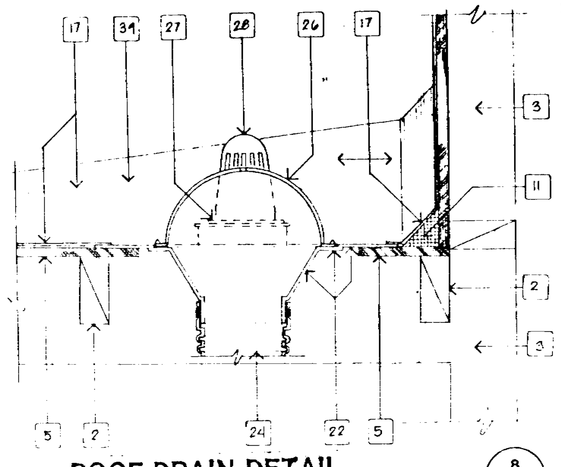

ROOF DRAIN DETAIL

SCALE: 3" = 1' - 0"

8 / A9.3

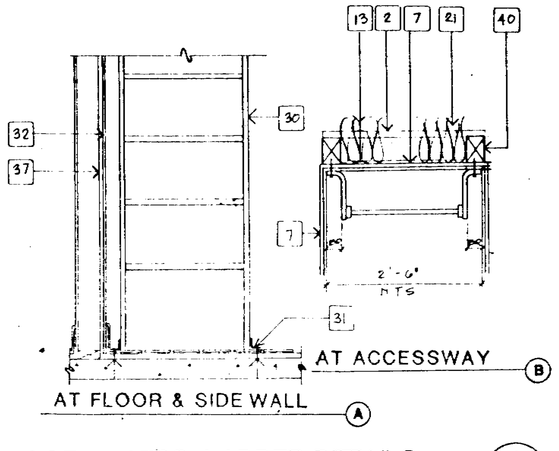

AT ACCESSWAY (B)

AT FLOOR & SIDE WALL (A)

ROOF ACCESS LADDER DETAILS

SCALE: 3/4" = 1' - 0"

9 / A9.3

SHEET NOTES:

1. 2x BLOCKING/NAILER - TYP.
2. 2x6 FRAMING.
3. ROOF TRUSS - REFER TO STRUCTURAL.
4. ELEVATION VARIES. SLOPE TO DRAIN.
5. 1/2" PLYWOOD.
6. 3/8" PLYWOOD.
7. 5/8" PLYWOOD.
8. 7/8" STUCCO ON "E-LATH CORP." "STUCCO-RITE" LATH AND BACKING - TYP.
9. "TYVEK" AIR INFILTRATION BARRIER OR APPROVED EQUAL.
10. 2x6 TOP PLATE.
11. 2" CANT.
12. CONCRETE ROOF TRUSS - REFER TO STRUCTURAL.
13. INSULATION IMPALING PIN - TYP.
14. 2x6 FRAMING CANT (TYP - W. 2x6 BELT SAME HEIGHT & DEPTH.
15. SEALANT.
16. 25 GA. PAINTED GALVANIZED CAP FLASHING - SECURE W/ CLEATS - TYP.
17. "ASA PRODUCTS" BE GE-LEX ROOFING MEMBRANE SYSTEM.
18. 7/8" STUCCO BRIGHT.
19. 2x6 NO. TRIM. C.A. 10 PLYWOOD, NAIL THRU BLOCKING.
20. COMPOSITE TILES OVER "LIVE TILE CORP." "TIPPAN 30" SPUN BONDED POLYPROPYLENE ROOFING UNDERLAYMENT.
21. R-30 FOIL FACED FIBERGLASS BATT INSULATION.
22. "TECH SPECIALTIES" T0009 INTEGRAL ROOF DRAIN & OVERFLOW DRAIN.
23. "TECH SPECIALTIES" T0062 RIGHT ANGLE INTEGRAL ROOF DRAIN AND OVERFLOW DRAIN.
24. "TECH SPECIALTIES" T0302 4" EXPANSION COUPLING.
25. "TECH SPECIALTIES" T1302 HALF DOME GRATE.
26. "TECH SPECIALTIES" T1300 DOME GRATE.
27. REDUCER COUPLING.
28. REMOVABLE OVERFLOW DOME GRATE.
29. 4" ABS RAIN WATER LEADER.
30. METAL ROOF ACCESS LADDER.
31. ACCESS LADDER ANGLE BRACKETS & ANCHORAGE BOLTS AS REQ.
32. 3/32" FIBERGLASS REINFORCED PLASTIC PANEL - REFER TO FINISH SCHEDULE SHEET A.10.1.
33. FIBERGLASS REINFORCED PLASTIC PANEL TRIM.
34. 1/4" X 1 1/2" LAG BOLT W/ NEOPRENE WASHER @ BOTH FACES OF MOUNTING BRACKET.
35. "BEACON" "TOP LITE" FIXTURE - REFER TO SHEET M2.
36. BEACON MOUNTING BRACKET.
37. 5/8" TYPE "X" GYPSUM BOARD.
38. SCREW 5/32" PLYWOOD DECK TO CONTINUOUS 2x NAILER @ 6" O.C. MAX.
39. CANT - SLOPE TO DRAIN - REFER TO SHEET A-12.
40. 2x4 SLOPE TO TOP & BOTTOM CHORDS OF TRUSSES BRACE W/ 2x4 @ 45° ANGLE.
41. 25 GA. PAINTED GALVANIZED METAL CAP FLASHING - ALSO REFER TO NOTE 16.
42. 1/4" CONTROL JOINT/DRIPSTOP STUCCO GROUND.
43. SLOPED FILL @ TOP OF PLYWOOD CANT.
44. INSULATED METAL ROOF HATCH W/ INTEGRAL FLASHING.
45. "MANVILLE" "EXPAND-O-FLASH" OR EQUAL APPROVED BY ROOFING MANUFACTURER.
46. LAG BOLT AND WASHER.
47. 2x6.
48. 2 x 8 REDWOOD CAP.
49. TILE ROOF, SEE SHEET A-12.
50. PLYWOOD SHEATHING, SEE SHEET S-2.
51. 24 GA. ROOF DECK.
52. 24 GA. G.I. SHEET METAL GUTTER.
53. 2x4 PAINTED TRIM.
61. EXPOSED 2 x 10 REDWOOD.
62. 12" DIAMETER HALF ROUND REDWOOD.
63. 2x4 PAINTED FASCIA BOARD.
64. R-19 INSULATION

70673-1976

DETAILS

REVISIONS

Backhaus Associates
Architecture - Landscape Architecture - Planning
844 Seventeenth Avenue Santa Cruz, California 95062 408-462-1870

REGISTERED ARCHITECT MARK V. SURDEJAC C-11039 STATE OF CALIFORNIA

Job Name:
TACO BELL
ALUM ROCK AVE.
SAN JOSE, CA

DRAWN	
CHECKED	
DATE	
SCALE	
JOB NO	
SHEET	A9.3
OF	SHEET 15

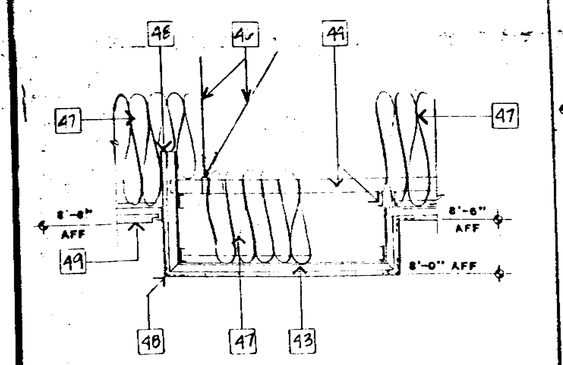

SECTION THRU FURR DOWN
SCALE 1½"=1'-0" (1 / A9.4)

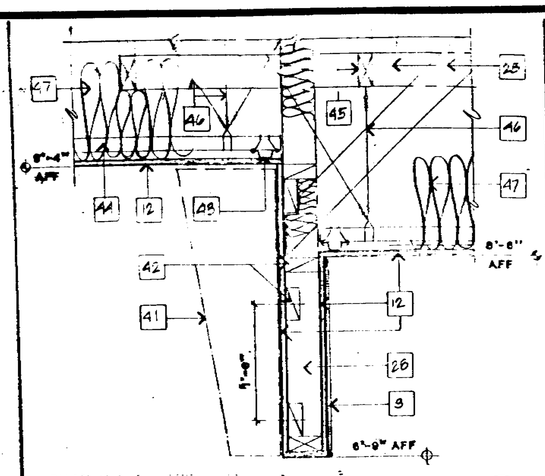

SECTION AT MENU BOARD
SCALE 1½"=1'-0" (2 / A9.4)

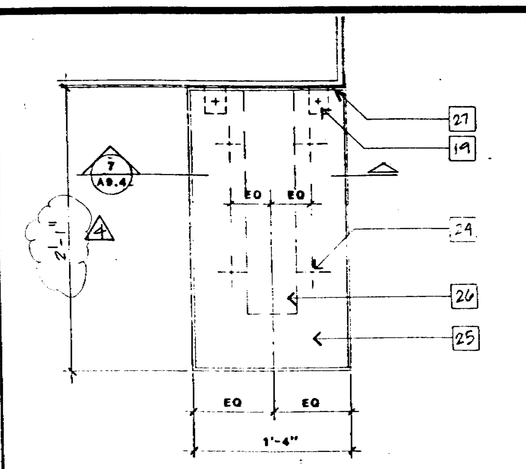

PLAN AT EQUIPMENT SHELF
SCALE 1½"=1'-0" (3 / A9.4)

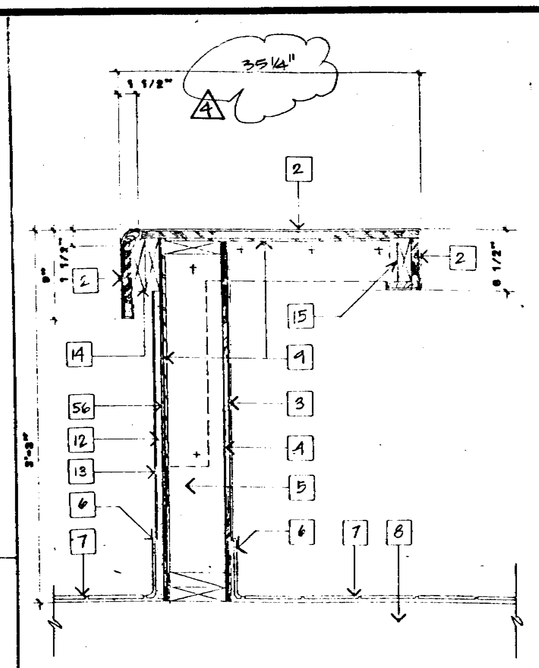

SERVING COUNTER SECTION
SCALE 1½"=1'-0" (4 / A9.4)

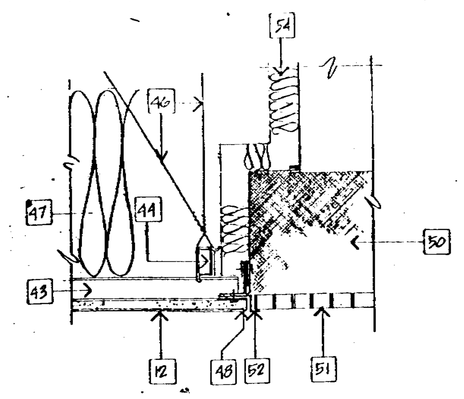

CEILING/GRILL DETAIL
SCALE 3"=1'-0" (5 / A9.4)

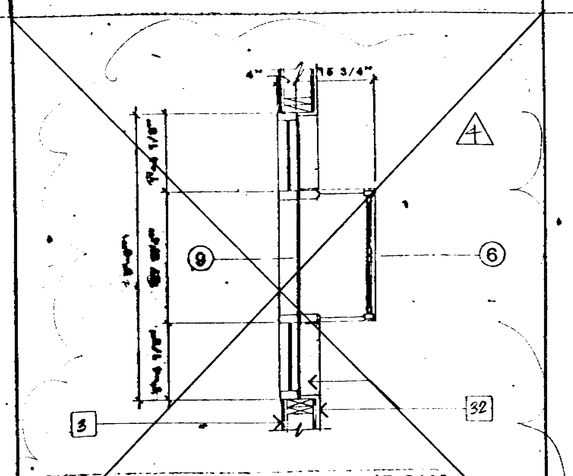

PLAN AT PASS THRU WINDOW
SCALE 3/4"=1'-0" (6 / A9.4)

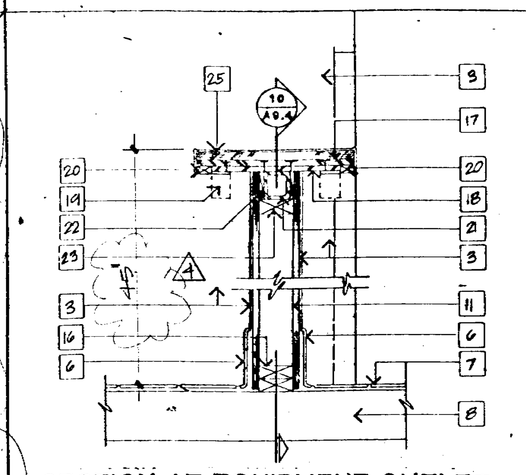

SECTION AT EQUIPMENT SHELF
SCALE 1½"=1'-0" (7 / A9.4)

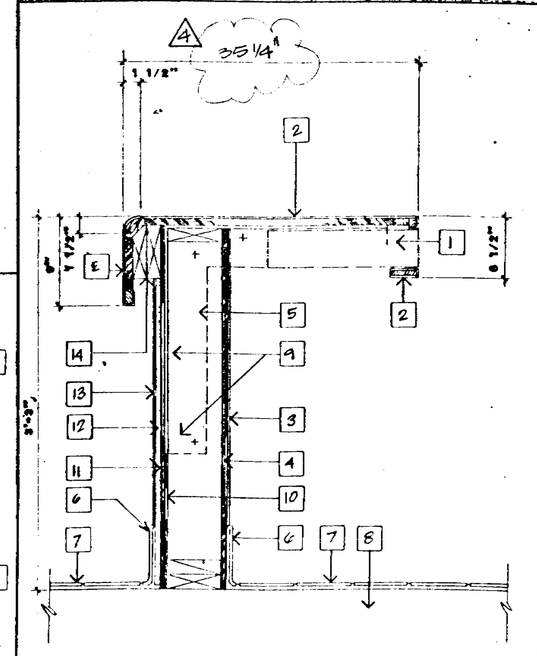

SERVING COUNTER SECTION
SCALE : 1½"=1'-0" (11 / A9.4)

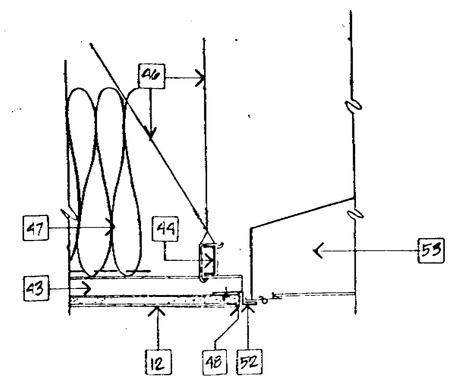

CEILING/LIGHT DETAIL
SCALE : 3"=1'-0" (8 / A9.4)

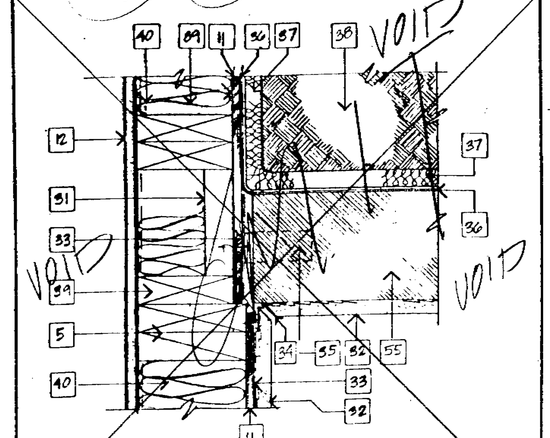

PLAN DETAIL AT PLANTER
SCALE 3"=1'-0" VOID (9 / A9.4)

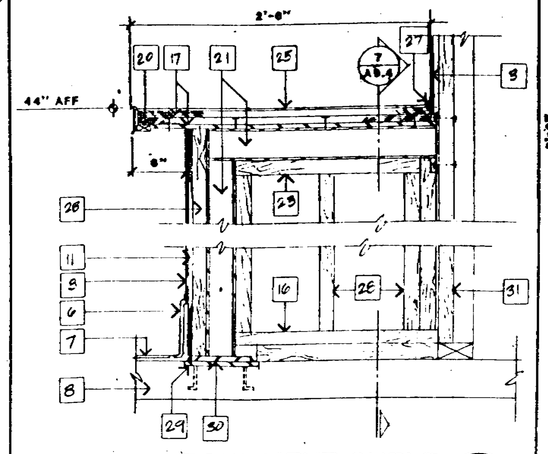

SECTION AT EQUIPMENT SHELF
SCALE : 1½"=1'-0" (10 / A9.4)

SHEET NOTE:

1. GAS BARREL - REFER TO EQUIPMENT PLAN ITEM # 2; SHEET A.1.
2. PLASTIC LAMINATE ON 3/4" PLYWOOD SERVING COUNTER W/ BULLNOSE SHEET - SUBMIT SHOP DRAWINGS TO ARCHITECT FOR APPROVAL.
3. 3/32" FIBERGLASS REINFORCED PLASTIC W/ TRIM - REFER TO FINISH SCHEDULE SHEET A.10.1.
4. PLYWOOD SHEAR WALL - REFER TO STRUCTURAL DRAWINGS.
5. 2X6 FRAMING - TYP..
6. 6" QUARRY TILE - REFER TO FINISH SCHEDULE SHEET A.10.1.
7. THIN SET QUARRY TILE - REFER TO FINISH SCHEDULE SHEET A.10.1.
8. CONCRETE SLAB - REFER TO STRUCTURAL.
9. 22"X22"X¼" FACIN MTL W.3.25, WELD @ 90° ANGLE STEEL TEE BRACKETS. DRILL & BOLT TO STUD @ EACH SIDE OF STIF.
10. 1/4" T. PLYWOOD.
11. 5/8" PLYWOOD.
12. 5/8" TYPE "X" GYPSUM BOARD
13. PLASTIC LAMINATE MILLWORKS - REFER TO FINISH SCHEDULE SHEET A.10.1.
14. 2 - 2X6.
15. 2X CONTROLS.
16. 2" X 2" X 1/4" TUBE.
17. 2 - 2X4 MT. PLATES.
18. 1/2" STEEL PLATE.
19. 2" W X 3" X 3/4" STEEL ANGLE BRACKET SECURE TO WOOD BLOCKING & WELD TO 1/2" STEEL SHELF - TYP. OF 2.
20. 1X2 - TYP.
21. 6"X3"X1/4" TUBE STEEL FRAME.
22. 1/4" CONT. PLYWOOD @ EX. SIDE OF STEEL TUBE FRAME.
23. 2X4 WOOD PLATE.
24. MOUNTING POINTS FOR EQUIPMENT - REFER TO EQUIPMENT PLAN & SCHEDULE SHEET A.12 - VERIFY LOCATIONS W/ OWNER - TYP.
25. 14 GA. STAINLESS STEEL TOP - SUBMIT SHOP DRAWINGS OF EQUIPMENT SHELF TO ARCHITECT FOR APPROVAL.
26. STRUCTURAL STEEL FRAME & WALL BLOW.
27. SEALANT & WELL.
28. 2X4 WOOD FRAMING - TYP.
29. 1/2" EMBEDDED WELD PLATE W/ ANCHORS.
30. 1/2" WELD PLATE.
31. 2X6.
32. STUCCO ON "R-CATH CORP." "STUCCO-RITE" LATH & BACKING TYP.
33. "PYROX" SITE 2ND ULTRATION BARRIER OR APPROVED EQUAL.
34. STUCCO EXPANSION GROUND.
35. BRICK TIE @ EACH CMU COURSE.
36. "ACA PRODUCTS" BC RE-CLOK MEMBRANE.
37. 2M-DRAIN SUBSURFACE DRAINAGE MATTING. TYPE 9120 W/ HEAT BONDED FILTER FABRIC.
38. PLANTING SOIL MIX.
39. THIN 2X6 FRAMING TO ALLOW FOR THICKNESS OF PLYWOOD AND MEMBRANE.
40. R-19 FOILFACED FIBERGLASS BATTS.
41. PEWI BOARD - REFER TO EQUIPMENT PLAN SHEET A.11 ITEM #59.
42. 2X4 BLOCKING - TYP.
43. METAL FURRING CHANNEL @ 2'-0" O.C. MAX. SECURE W/ FURRING CHANNEL CLIP OF EQUAL - TYP.
44. 1 1/2" FURRING CHANNEL @ 4'-0" O.C. MAX. - TYP.
45. ROOF TRUSSES - REFER TO STRUCTURAL.
46. HANGER WIRES - COMPLY W/ UBC STANDARD 47-10 FOR SEISMIC
47. 5/8" TYPE "X" GYPSUM BOARD CEILING.
48. 2X4 BLOCKING - TYP.
49. 2X4 BLOCKING - TYP. SEE PLAN FOR LOCATION.
50. PAINT SURFACE & WEAR SHEET METAL SURFACE FLAT BLACK IN THIS AREA.
51. RETURN AIR OR STEAM RELIEF GRILL MOUNT FLUSH W/ BOTTOM OF GYPSUM BOARD CEILING.
52. ELECTRICAL BACKBOX IN CHANNEL
53. LIGHT FIXTURE MOUNT FLUSH W/ BOTTOM OF GYPSUM BOARD CEILING.
54. 2" DUCT INSULATION - TYP.
55. 6" CMU WALL.
56. 1/2" PLYWOOD SPACERS @ STUDS.
57. 5/8" PLYWOOD SPACERS @ STUDS.

REVISIONS	BY
1 1-19-88	DA

Backhaus Associates
Architecture - Landscape Architecture - Planning
844 Seventeenth Avenue Santa Cruz, California 95062 408-462-1970

REGISTERED ARCHITECT MARK Y. SUNDBERG C-11038 STATE OF CALIFORNIA

Job Name:
TACO BELL
ALUM ROCK AVE.
SAN JOSE, CA

70673-1976

22

DETAILS

DRAWN	
CHECKED	
DATE	
SCALE	
JOB NO.	
SHEET	A9.4
OF	SHEETS

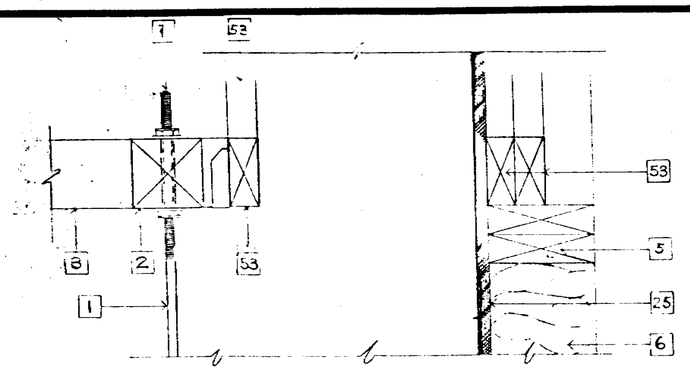

SHELF HANGER DETAIL

SCALE: 3" = 1'- 0"

1 / A9.5

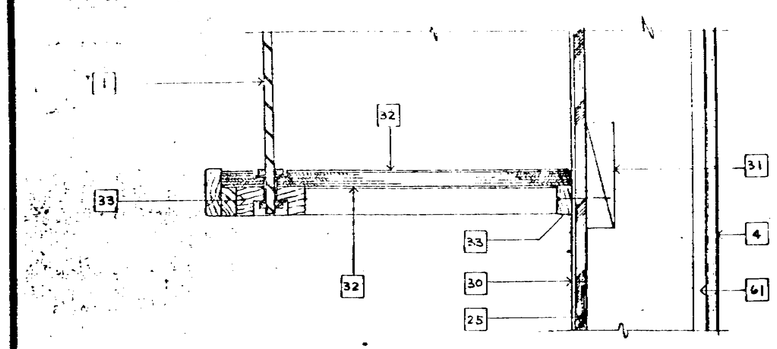

SHELF HANGER DETAIL.

SCALE: 3" = 1'- 0"

4 / A9.5

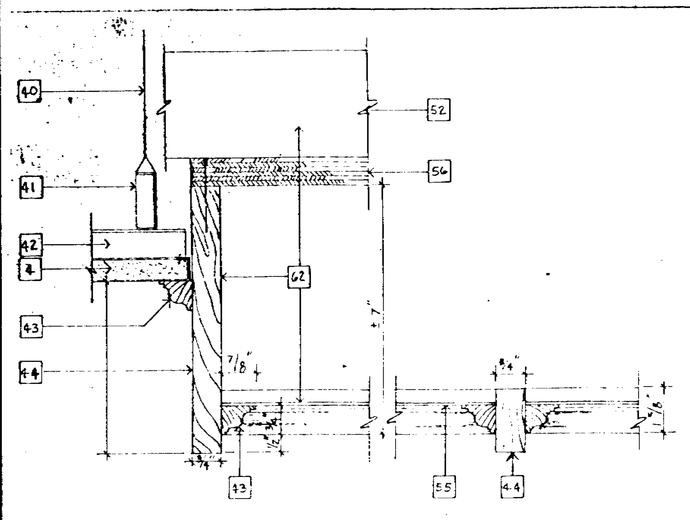

DINING AREA LIGHT DETAIL @ SERVING COUNTER

7 / A9.5

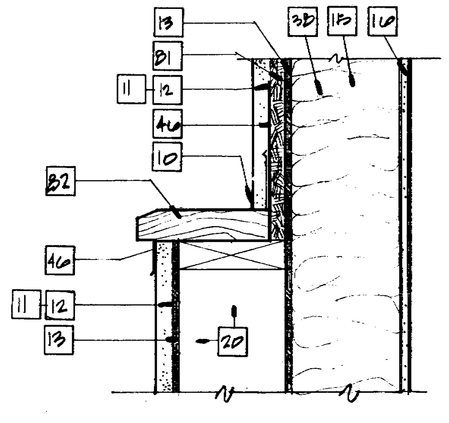

~~WALL TRIM DETAIL~~
3"=1'-0"

8 / A9.5

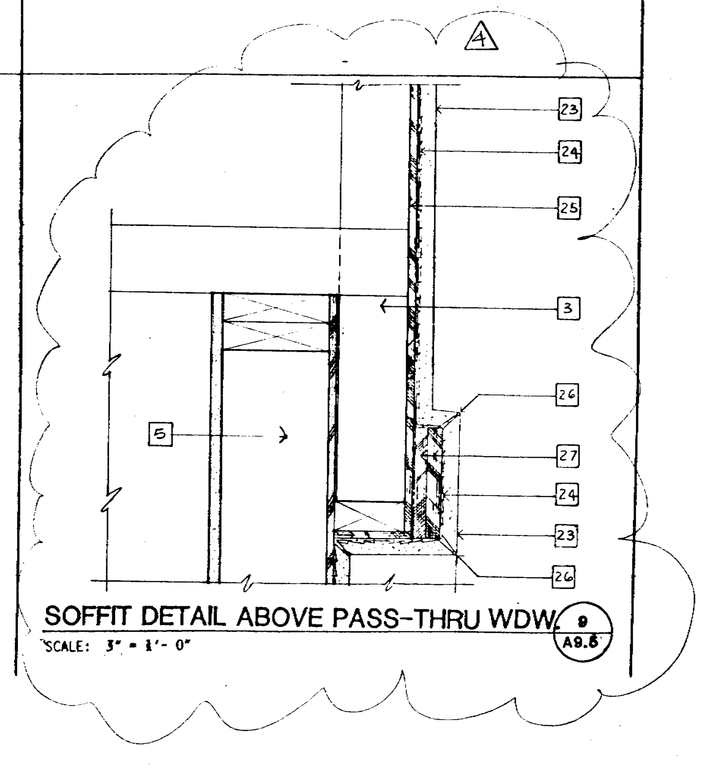

SOFFIT DETAIL ABOVE PASS-THRU WDW.

SCALE: 3" = 1'- 0"

9 / A9.5

SHEET NOTES:

1. 1/2" STEEL ROD W/ WASHERS & NUTS - REFER TO STRUCTURAL.
2. 4x6 FRAMING - REFER TO STRUCTURAL.
3. 2x8 FRAMING - REFER TO STRUCTURAL.
4. 5/8" TYPE "X" GYPSUM BOARD.
5. 2x6 WOOD FRAMING.
6. R-19 KRAFT FACED FIBERGLASS BATT INSULATION.
7. 25 GA. PAINTED GALVANIZED SHEET METAL CAP SECURE WITH CLEATS.
8. 8" CMU WALL - REFER TO STRUCTURAL FOR REINFORCING.
9. 7/8" STUCCO ON "K-LATH CORP." "STUCCO-RITE" LATH BACKING - TYP.
10. 3x12 WOOD BUMPER - REFER TO STRUCTURAL FOR ANCHORING DETAILS.
11. 6" CONC. SLAB - SLAB SLOPE 1/8"/FT TO DRAIN
12. 4" CONC. SLAB - REFER TO STRUCTURAL.
13. CONC. CURB.
14. 36"W x 12"D CONC. FOOTING
15. 2x WOOD LEDGER - REFER TO STRUCTURAL FOR ANCHORING DETAILS.
16. 2x6 ROOF JOISTS
17. "AGA PRODUCTS" BC BC-1-CH MEMBRANE SYSTEM OVER 5/8" PLYWOOD
18. TIE STRAP - REFER TO STRUCTURAL.
19. 6" RESILIENT TOP SET BASE.
20. WOOD HEADER - REFER TO STRUCTURAL.
21. 2 LAYERS 3/8" EXTERIOR PLYWOOD
22. GALVANIZED METAL.
23. 7/8" STUCCO ON "K-LATH CORP." "STUCCO-RITE" LATH AND BACKING - TYP.
24. "TYVEK" AIR INFILTRATION BARRIER OR APPROVED EQUAL.
25. 3/8" EXTERIOR PLYWOOD.
26. 7/8" STUCCO GROUND. FILL W 3/4" D ALL METAL FRAMES FOR SEALANT AND BACKER ROD AND RE DECORAT.
27. 2 LAYERS 3/4" EXTERIOR PLYWOOD BLUE TOGETHER AND SHEA SCREW TO 2 3/8" EXTERIOR PLYWOOD.
28. 3 1/4" EXTERIOR PLYWOOD.
29. 2x WOOD FRAMING.
30. 1/32" FIBERGLASS REINFORCED PLASTIC PANELS - REFER TO FINISH SCHEDULE SHEET A.10.1.
31. 2x8 BLOCKING.
32. PLASTIC LAMINATE TO MATCH SERVING COUNTER.
33. VERTICAL GRAIN CLEAR RED OAK TRIM.
34. CONC. FILLED STEEL POST - REFER TO 3/53 DIM.
35. CHAIN LINK W/ WOOD SLAT GATE - SUBMIT SHOP DRAWINGS FOR APPROVAL.
36. 5/8" BOLT.
37. FLOOR DRAIN.
38. 3"x3" HOLLOW METAL DROP-SUBMIT HARDWARE FOR APPROVAL.
39. EDGE OF 6" CONC. SIDEWALKS DOOR STOP.
40. HANGER WIRES - COMPLY W/ UBC STANDARD 47-IE FOR SEISMIC BRACING.
41. 1 1/2" FURRING CHANNEL 4'-0" O.C. MAX. - TYP.
42. METAL FURRING CHANNEL @ 2'-0" O.C. MAX. SECURE W/ FURRING CHANNEL CLIP OR EQUAL - TYP.
43. WOOD BASE - TYPE 2 F1 BY MOUSE OF MOULDING "MAN MOVE, CO. 800-558 - TYP.
44. 3/4"x3/4" CLEAR WCE OAK.
45. SEALANT & BACKER ROD.
46. ATTIC VENT W/ INSECT SCREEN - CONTRACTOR TO SUBMIT TO ARCHITECT FOR APPROVAL.
47. 1/2" PLYWOOD.
48. 2" CAST.
49. 2x6 BLOCKING.
50. "BALDOR" "TOP LITE" FIXTURE - REFER TO SHEET R.2.
51. BEACON MOUNTING BRACKET.
52. R-19 FOIL FACED FIBERGLASS BATT INSULATION.
53. ROOF TRUSSES - REFER TO STRUCTURAL.
54. 1/4"x 1 1/2" LAG BOLT W/ NEOPRENE WASHER @ BOTH FACES OF MOUNTING BRACKET - TYP.
55. A.P.I. WHITE POLYSTYRENE LENS - TYP.
56. 3/4" PLYWOOD SCREED & PAINTED WHITE.
57. 2x FRAMING BELOW TO TRUSSES.
58. ELECTRIC LIGHT & FIXTURE - REFER TO ELECTRICAL DRAWINGS.
59. CONC. FILLED STEEL GATE POST.
60. 8" RAIN WATER LEADER.
61. 5/8" PLYWOOD SPACER & SYMBS W.O.W.
62. GENERAL CONTRACTOR TO SUBMIT SHOP DRAWINGS TO ARCHITECT FOR APPROVAL.
63. 2" CAST. BOLT & 3/8"x.C. & 8" MAP. BAND & 2"x"D.C.
64. STUCCO SCREED.
65. STUCCO SCREED AND SEALANT.

70673-1976

23

DETAILS

REVISIONS	BY
4 1-19-88	

Backhaus Associates
Architecture - Landscape Architecture - Planning
846 Seventeenth Avenue Santa Cruz, California 95062 408-462-1970

REGISTERED ARCHITECT JACK V. SUTTONING C-11038 STATE OF CALIFORNIA

Job Name:
TACO BELL
ALUM ROCK AVE.
SAN JOSE, CA

DRAWN	
CHECKED	
DATE	
SCALE	
JOB NO.	
SHEET	A9.5
OF	SHEETS

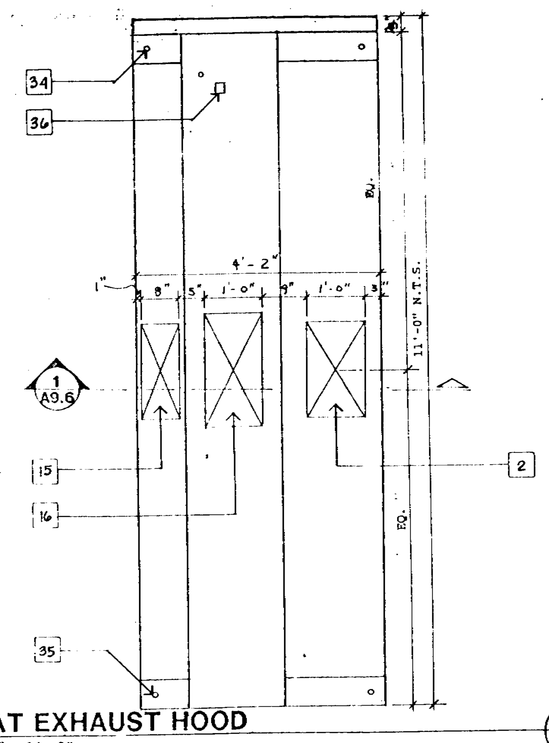

PLAN AT EXHAUST HOOD

SCALE: 3/4" = 1'- 0"

4 A9.6

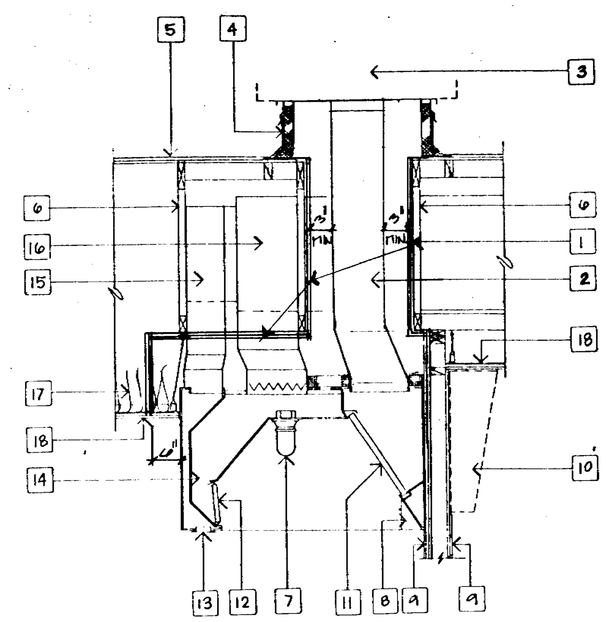

SECTION THRU EXHAUST HOOD

SCALE: 3/4" = 1' - 0"

1 A9.6

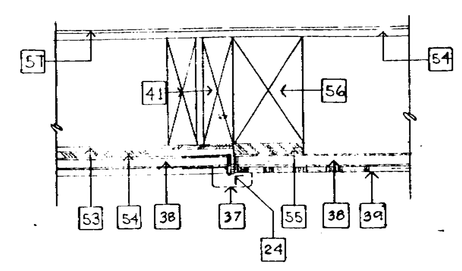

DETAIL AT COUNTER FASCIA

SCALE: 3" = 1'- 0"

5 A9.6

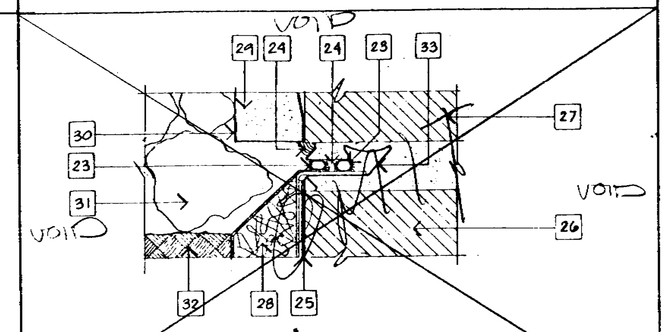

REGLET DETAIL @ CMU PLANTER WALL

FULL SIZE

VOID

2 A9.6

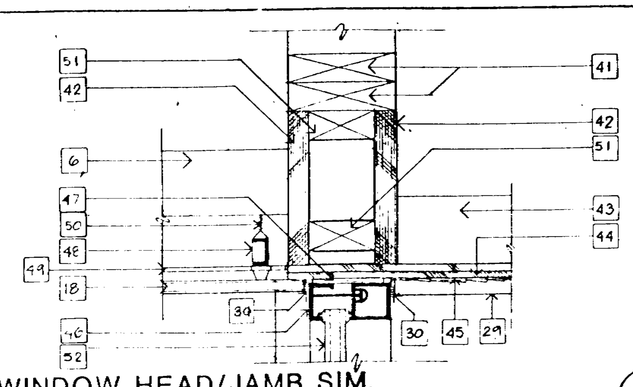

WINDOW HEAD/JAMB SIM.

SCALE: 3" = 1'- 0"

6 A9.6

3 A9.6

SHEET NOTES:

1. 2 LAYERS 3/8" TYPE 'X' GYP. BD.
2. 16 GA. METAL DUCT - TYP.
3. EXHAUST FAN UNIT.
4. VENTILATED CURB WITH 1/2" Ø HOLES @ 6" O.C. ON 2 SIDES W/ INSECT SCREEN.
5. 'ACA PRODUCTS' ROOF MEMBRANE.
6. ROOF TRUSSES - REFER TO STRUCTURAL - TYP.
7. VAPOR PROOF LIGHT FIXTURE.
8. REMOVABLE STAINLESS STEEL GREASE PAN.
9. CERAMIC TILE.
10. MENU BOARD.
11. REMOVABLE GREASE FILTER.
12. 8" DIFFUSER.
13. 3" WIDE AIR CURTAIN VENT.
14. INSULATED MAKE UP AIR PLENUM.
15. SUPPLY AIR DUCT TO AIR CURTAIN VENT.
16. MAKE UP AIR DUCT.
17. R-30 FOILFACED FIBERGLASS BATTS.
18. 5/8" TYPE X GYPSUM BOARD CEILING.
19. SPACER.
20. 1/4" CLEAR ANODIZED ALUMINUM BRACKET.
21. BANNER BOARD LOCATION - REFER TO NOTE # 6 OF ARCHITECTURAL ROOF PLAN, SHEET A12.
22. PROFILE OF SOFFIT AND CAP FLASHING.
23. VINYL ROPE.
24. SEALANT.
25. UNBACKED 'ACA PRODUCTS' MEMBRANE.
26. 4x8 CMU.
27. 2x8 CMU CAP BLOCK.
28. 'ENKADRAIN' SUBSURFACE DRAINAGE MATTING.
29. 7/8" STUCCO ON 'K-LATH CORP.' 'STUCCO-RITE LATH AND BACKING - TYP.
30. 7/8" STUCCO-GROUND. ALLOW 1/4" @ ALL METAL FRAMES FOR SEALANT AND BACKER ROD.
31. 2" MULCH LAYER.
32. PLANTING SOIL MIX.
33. REGLET.
34. CONDUIT.
35. HANGER ROD LOCATION - TYP.
36. JUNCTION BOX.
37. 1x2 V.G. CLEAR RED OAK TRIM AS REQ. BY THE ARCHITECT.
38. 5/8" GYPSUM BOARD.
39. PLASTIC LAMINATE WAINSCOTT.
40. 2x4 WOOD STUDS.
41. 2x6 WOOD FRAMING .
42. 1 1/8" EXTERIOR PLYWOOD.
43. 2x4 FRAMING.
44. 2 LAYERS OF 3/8" PLYWOOD.
45. 'TYVEK' AIR INFILTRATION BARRIER.
46. THERMALBREAK ANODIZED ALUMINUM FRAME.
47. 1/4" SHIM.
48. 1 1/2" METAL FRAMING CHANNEL 4'-0" O.C. MAX.
49. METAL FURRING CHANNEL @ 2'-0" O.C. MAX. SECURE WITH FURRING CHANNEL CLIP OR EQUAL.
50. HANGER WIRE.
51. 2x WOOD FRAMING.
52. TEMPERED INSULATION GLASS ASSEMBLY WITH MATCHING COLOR THERMALBREAK AND INTEGRAL DESSICANT - TYP.
53. 1/4" PLYWOOD - METAL COUNTER SUPPORT WHERE OCCURS. REFER TO DETAILS 4/A9.4 & 11/A9.4.
54. 3/8" PLYWOOD - REFER TO STRUCTURAL AND TO DETAILS 4/A9.4 & 11/A9.4.
55. 5.8" PLYWOOD SPACER.
56. 4x6 - REFER TO STRUCTURAL.
57. 3/32" FIBERGLASS REINFORCED PLASTIC PANELS.

70673-1976

24

DETAILS

REVISIONS	BY

Backhaus Associates
Architecture - Landscape Architecture - Planning
844 Seventeenth Avenue Santa Cruz, California 95062 408-462-1879

REGISTERED ARCHITECT
CHARLES V. SUNDBERG
C-11038
STATE OF CALIFORNIA

Job Name:
TACO BELL
ALUM ROCK AVE.
SAN JOSE, CA

DRAWN	
CHECKED	
DATE	
SCALE	
JOB NO	
SHEET	A9.6
OF	SHEETS

INTERIOR FINISH SCHEDULE

ROOM NO.	FLOOR: QUARRY TILE	FLOOR: CONCRETE	FLOOR: SEALED CONCRETE	BASE: QUARRY TILE	BASE: RESILIENT TOPSET BASE	WALLS NORTH: FRP	WALLS NORTH: 5/8" GYP. BD.	WALLS NORTH: 5/8 OR. STR. BD.	WALLS NORTH: CERAMIC TILE	WALLS NORTH: OTHER	WALLS EAST: CERAMIC TILE	WALLS EAST: FRP OVER 5/8 GYP. BD.	WALLS EAST: 5/8" GYP. BD.	WALLS EAST: 5/8 OR. STR. BD.	WALLS SOUTH: CERAMIC TILE	WALLS SOUTH: FRP	WALLS SOUTH: 5/8 GYP. BD.	WALLS SOUTH: 5/8 OR. STR. BD.	WALLS WEST: CERAMIC TILE	WALLS WEST: FRP	WALLS WEST: 5/8 GYP. BD.	WALLS WEST: 5/8 OR. STR. BD.	WALLS S.E.: FRP	WALLS N.W.: FRP	WAINSCOT: PLASTIC LAMINATE AT SERVING COUNTER	CEILING: GYP. BD.	CEILING: 2x2 ACOUSTIC GRID CEILING HT.	DOOR & FRAME DOOR: OTHER	DOOR: ALUMINUM	DOOR: HOLLOW METAL	DOOR: OTHER	FRAME: ALUMINUM	FRAME: HOLLOW METAL	FRAME: OTHER	REMARKS
101	1			2			3					3					3				3				3		4								R - MOUNT SPEAKERS & SUPPLY AIR DIFFUSERS ON 2x2 CEILING TILE REFER TO NOTE 4
DINING	A			A			B						B				B				B				C		R		G			G			
102	5			2		6	•					6			7					6						8				12		•			
SERVING	A			A		E	F					E			D					E						F				K		M			
103	5			2		6			7		7	6					6			6						8				12		•			
KITCHEN	A			A		E			D		D	E					E			E						F				K		M			
104	5			2		6						6					6			6						8				12		•			
OFFICE	A			A		E						E					E			E						F				K		M			
105	5			2		6						6					6			6						8									
CREW	A			A		E						E					E			E						F									
106	5			2		6						6					6			6						8									
STORAGE	A			A		E						E					E			E						F									
107	5			2						R																		R		R				R	R - 36" x 78" DOOR IN MODULAR INSULATED CONSTRUCTION SYSTEM REFER TO EQUIPMENT PLAN ITEM NO. 24 SHEET A-11
COOLER	A			A						•																			•			•			•	
108	5			2		6						6					6			6						8				13					
UTILITY	A			A		E						E					E			E						F				•					
109			•		9			10					10				10				10					10			•			•			
CLOSET			L		I			J					J				J				J					J			M			M			
110			•		9				•					•				•				•				10			•			•			
CLOSET			L		I				K					K				K				K				J			M			M			
111	1			2		11						11					11				11			11		8				12		•			
MEN	A			A		E						E					E				E			E		F				K		M			
112	1			2		11						11					11				11		11			8				12		•			
WOMEN	A			A		E						E					E				E		E			F				K		M			
113	1			2				3					3				3				3							•		12	•	•			
HALL	A			A				B					B				B				B								G	K	G	M			

SHEET NOTES:

1. 6X6X1/2" AMERICAN OLEAN 'SUNRISE' Q23.
2. 6' COVE BASE AMERICAN OLEAN TO MATCH FLOOR.
3. LIGHT SKIP-TROWEL TEXTURE.
4. 2'X2'X3/4" 'GLACIER ACOUSTONE' BY U.S. GYPSUM.
5. 6X6X1/2 AMERICAN OLEAN 'SUNRISE' W/ ABRASIVE FINISH - SIMILAR TO NOTE 1.1.
6. 3/32" FIBERGLASS REINFORCED PLASTIC PANELS OVER 5/8" GYPSUM BOARD, U.O.N.
7. 4 1/4" SQUARE AMERICAN OLEAN # 58 'VELLUM'.
8. SMOOTH FINISHED GYP. BD. SUSPENDED FROM. HAT CHANNELS & FRAMING CHANNELS.
9. 6" HIGH.
10. TAPE & BED & SAND SMOOTH.
11. 3/32" FIBERGLASS REINFORCED PLASTIC PANELS OVER 5/8" PLYWOOD.
12. SOLID CORE WOOD. CLEAR RED OAK
13. STAINLESS STEEL.

R SEE REMARKS
A DARK BROWN GROUT.
B BENJAMIN MOORE OW-72.
C FORMICA BRAND 'ALMOND SLATE' COLOR OR APPROVED EQUAL.
D ALMOND GROUT
E NATURAL ALMOND P-118 MANUFACTURED BY 'MARLITE' OR APPROVED EQUAL.
F BENJAMIN MOORE OW-72 IMPERVO ENAMEL.
G ANODIZED DARK BRONZE
H FINISH TO BE VERIFIED BY OWNER (NOT USED)
I DARK BROWN
J 2 COATS GYPSUM BOARD SEALER.
K 2 COATS CLEAR SEALER.
L CLEAR SEALER WITH ABRASIVE.
M BENJAMIN MOORE CB-16

GENERAL NOTES:

1. FINISH ON COUNTER NATURAL OAK SUEDE - 346
   ACCENT TOP - BENJAMIN MOORE GR - 111
   BOTTOM - BENJAMIN MOORE- ST-2
2. WALLS - BENJAMIN MOORE- OW - 72
3. FRAMES - BENJAMIN MOORE CB - 16
4. REFER TO SHEET A5 AND 2/A9.5 FOR EXTERIOR COLOR DESIGNATIONS.
5. EXTERIOR WALKS 6"x6"x1/2" 'QUARRY'-CANYON RED' QUARRY TILE -TYPICAL.

DOOR SCHEDULE

DOOR NUMBER	LOCATION	SIZE	TYPE	MATERIAL FRAME	MATERIAL DOOR	DETAIL HEAD	DETAIL JAMB	DETAIL SILL	HDWR GROUP	RATING	REMARKS
1	101 TO EXT.	PR 3'X 7'X1 3/4	A	ANOD. ALUM.	ANOD. ALUM.		3/A9.1 7/A9.1	12/A9.1	2		10" HIGH DOOR BOTTOM △A COMPLY WITH UBC 3304 (C)
2	101 TO EXT.	PR 3'X 7'X1 3/4	A	ANOD. ALUM.	ANOD. ALUM.		3/A9.1 7/A9.1	12/A9.1	2		10" HIGH DOOR BOTTOM △A COMPLY WITH UBC 3304 (C)
3	EXT. FROM 109	2'-6" X 6'-8" X 1 3/4	D	H.M.	H.M.	4/A9.2	4/A9.2	12/A9.2	5		10"x20" TOP AND BOTTOM LOUVERS @ 6" FROM ALL SIDES OF DOOR.
4	EXT. FROM 110	2'-6" X 6'-8" X 1 3/4	D	H.M.	H.M.	4/A9.2	4/A9.2	12/A9.2	5		WITHOUT LOUVERS
5	106 TO EXT.	4'-0" X 6'-8" X 1 3/4	B	H.M.	H.M.	4/A9.2	4/A9.2	8/A9.2	3		18" HIGH STAINLESS STEEL PLATE @ INTERIOR SIDE OF DOOR.
6	111 FROM 113	3'-0" X 6'-6" X 1 3/4	E	H.M.	S.C. WD.	3/A9.2	3/A9.2	11/A9.2	1		12" HIGH KICK PLATE @ EA. SIDE OF DOOR. SUBMIT FOR APPROVAL. CLEAR RED OAK.
7	112 TO 113	3'-0" X 6'-6" X 1 3/4	E	H.M.	S.C. WD.	3/A9.2	3/A9.2	11/A9.2	1		12" HIGH KICK PLATE @ EA. SIDE OF DOOR. SUBMIT FOR APPROVAL. CLEAR RED OAK.
8	102 FROM 113	2'-8"X 6'-8" X 1 3/4 △A	C	H.M.	S.C. WD.	3/A9.2	3/A9.2	11/A9.2	4		12" HIGH KICK PLATE @ EA. SIDE OF DOOR. SUBMIT FOR APPROVAL. CLEAR RED OAK.
9	103 TO 104	3'-0" X 6'-8" X 1 3/4	F	H.M.	S.C.WD.	7/A9.2	7/A9.2	11/A9.2	E		12" HIGH KICK PLATE @ EA. SIDE OF DOOR. SUBMIT FOR APPROVAL. CLEAR RED OAK.
10	107 TO 103	36" X 78" X 4"	R	R	R	—	—	—	—		MODULAR INSULATED COOLER. REFER TO EQ IP. PLAN, ITEM # 24, SHEET A - 11
11	106 TO ATTIC		G	SST.	SST.	—	—	—	—		ATTIC ACCESS DOOR 2'-0"x3'-6" SUBMIT FOR APPROVAL.

HARDWARE GROUP SCHEDULE

NOTE: ALL DOOR HARDWARE SHALL COMPLY W/ CALIF TITLE 24 PART 2 - 3003 WHERE APPLICABLE △A

GROUP	BUTTS	LOCKS	CLOSERS	STOPS	REMARKS
1		CYLINDRICAL HD. PRIVACY PUSHBUTTON 53 K, 60 LH-C STR 612	LCN 1053		LEVER BOTH SIDES OF DOOR, CLOSER @ BATHROOM SIDE OF DOOR.
2	AS REQUIRED	VERIFY WITH OWNER	NORTON 1605 BC DA DK BRONZE E		COMPLY WITH UBC 3304 (C)
3	2 PR McKINNEY # 74B 4 1/2" X 4 1/2"	MORTISE LOCKSET 24 H - 6 BW461-612	LCN 4116		LEVER ON BOTH SIDES OF DOOR.
4	1 1/2 PR McKINNEY # 74 B 4 1/2"X 4 1/2"	CYLINDRICAL - HD 83K 6D4, C STR 612	LCN 1053		↓
5	1 1/2 PR McKINNEY # 74B 4 1/2"X 4 1/2"	MORTISE LOCKSET 24H-6BW461-612			↓
6	1 1/2 PR McKINNEY #74B 4 1/2"X 4 1/2"	CYLINDRICAL - HD 83K 6D4 CSTR 612		HEWI WALL STOP	↓
7	BLUM HINGES	CORBIN	———	———	PROVIDE PRESSURE RELEASE LATCHES FOR ALL CABINETS

70673-1670

25

DOOR,HARDWARE & FINISH SCHEDULE

REVISIONS	BY
△1 11-17-87	PB
△2 1-19-88	DA

Backhaus Associates
Architecture - Landscape Architecture - Planning
944 Seventeenth Avenue Santa Cruz, California 95062 408-462-1870

REGISTERED ARCHITECT MARK Y. SUTTON C-11058 STATE OF CALIFORNIA

Job Name: TACO BELL
ALUM ROCK AVE.
SAN JOSE, CA

DRAWN
CHECKED
DATE
SCALE
JOB NO.
SHEET A10.1
OF SHEETS

WINDOW SCHEDULE

WINDOW LOCATION NUMBER	WINDOW TYPE	DETAIL HEAD	DETAIL JAMB	DETAIL SILL	FRAME MATERIAL	GLAZING	REMARKS
1	A	6/A9.6	1/A9.1 3/A9.1	4/A9.1	ANOD. ALUM.	THERMAL BREAK 2 PANES 1/4" TEMPERED	
2	B	5/A9.1	5/A9.1	9/A9.1			SILL 2" WIDER THAN HEAD & JAMB
3	B	5/A9.1	5/A9.1	3/A9.1			
4	C	5/A9.1	5/A9.1	9/A9.1			
6	E	SIM/ A9.1	SIM. 5/A9.1	SIM. 9/A9.1			
7	F	1/A9.2	1/A9.2	1/A9.2		1/4" TEMPERED	
8	F	2/A9.2	2/A9.2	2/A9.2			
9	D	SIM. 5/A9.1	SIM. 5/A9.1	SIM. 9/A9.1			FLUSH MOUNTED SLIDING SERVICE WINDOW

DOOR TYPES

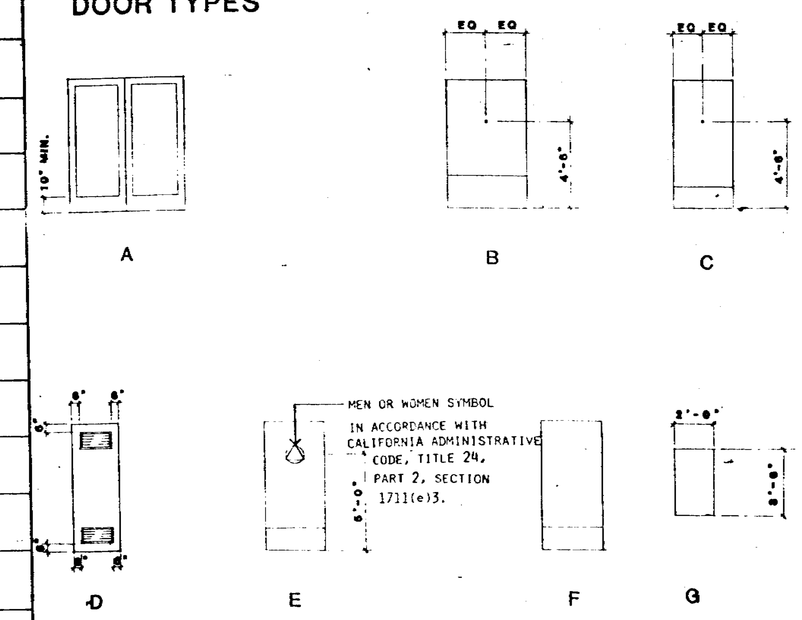

WINDOW TYPES

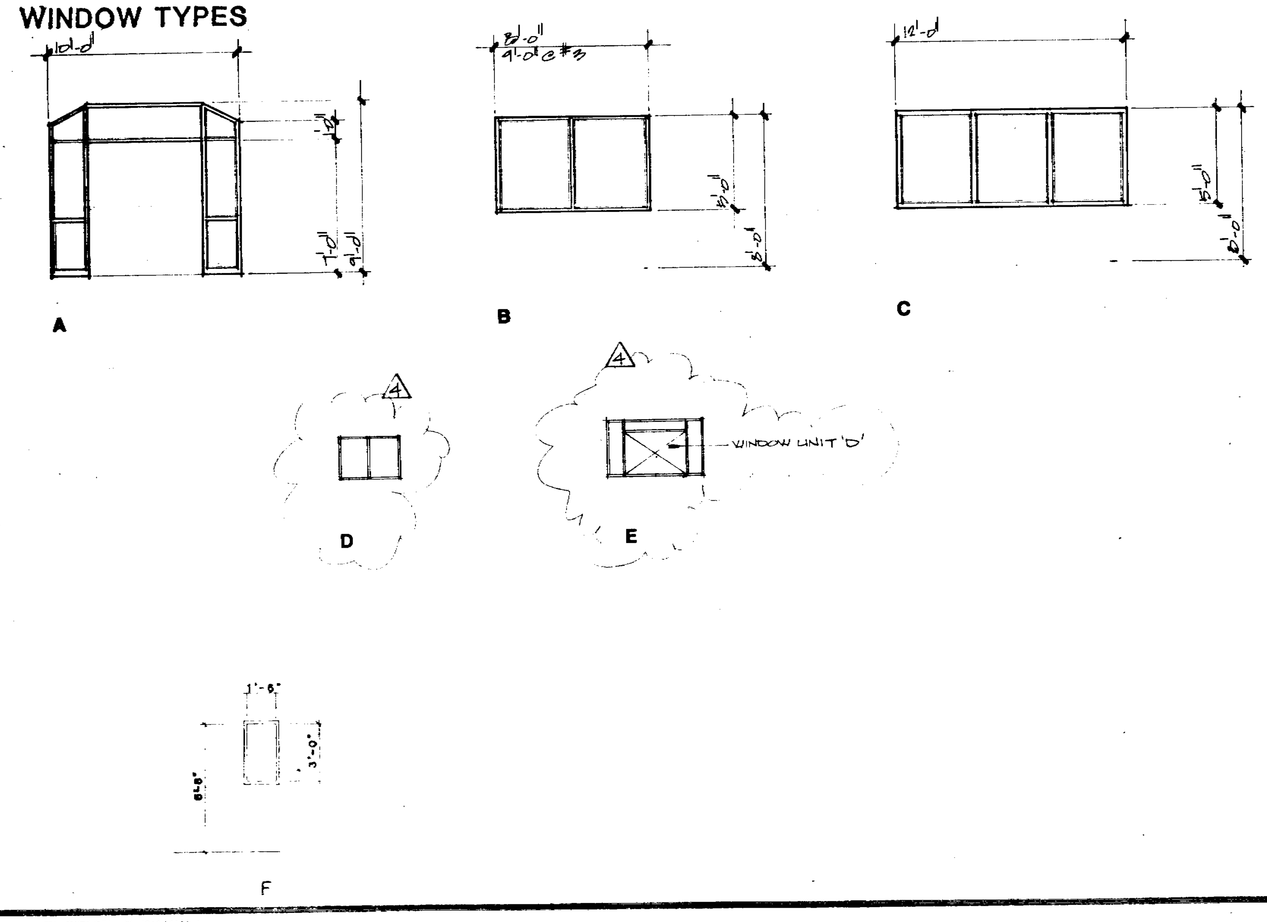

70673-1976

WINDOW SCHEDULE, WINDOW TYPES & DOOR TYPES

REVISIONS	BY
1 1-19-88	DA

Backhaus Associates
Architecture - Landscape Architecture - Planning
844 Seventeenth Avenue Santa Cruz, California 95062 408-462-1870

REGISTERED ARCHITECT MARK T. SUNDBERG C-11656 STATE OF CALIFORNIA

Job Name:
TACO BELL
ALUM ROCK AVE.
SAN JOSE, CA

DRAWN
CHECKED
DATE
SCALE
JOB NO.
SHEET
A10.2
OF SHEETS

EQUIPMENT SCHEDULE

NO	QTY	SUPPLIER EQ.	SUPPLIER G.C.	SUPPLIER T.B.	INSTALL G.C.	INSTALL T.B.	ITEM	MANUF./MODEL NO.	C.W.	H.W.	DRAIN	GAS	ELECTRICAL	REMARKS
1	1			•	•		ICE MACHINE	SCOTSMAN M0750	1/4"		3/8"		115V/60HZ/1PH	
2	1			•	•		ICE BIN	SLIM TRIM 400 BIN			1"			1'x6"Wx2'-6 1/2"Dx5'-8"H
3	1	•			•		DRINK DISPENSER	UNITED BEVERAGE/PX[illegible]0-6TB	3/8"		5/8"		115V/60HZ/1PH	BY CONCESSION SERVICE CORP. PROVIDE CONDUIT AND CHASE FOR ALL CONCEALED
4	1	•			•		REMOTE DISPENSER	UNITED BEVERAGE/CPE-6TB	3/8"		5/8"		115V/60HZ/1PH	BY CONCESSION SERVICE CORP. SERVICES & DISTRIBUTION LINES
5	1			•		•	COFFEE DISPENSER	BUNN-O-MATIC/VPR					120V/60HZ/1PH	
6	1	•			•		VEG. (CONDIMENT BIN)	SOUTHERN EQUIPMENT/FAB.			1"			DRAIN TO FLOOR SINK
7	1	•			•		OVER SHELF	SOUTHERN EQUIPMENT/FAB.						
8	2	•			•		TACO RACK (RAILS)	SOUTHERN EQUIPMENT/FAB.						
9	1	•			•		INSULATED SERVICE SHAFT	SOUTHERN EQUIPMENT/FAB.						EQUIPMENT CHASE TO OVERHEAD
10	1	•			•		STEAM CABINET	SOUTHERN EQUIPMENT/FAB.	1/2"	1/2"	1"			DRAIN TO FLOOR SINK
11	1	•			•		PAPER SHELF, TELEPOLE & MON. SHELF	SOUTHERN EQUIPMENT/FAB.						
12	1	•			•		STEAM CABINET	SOUTHERN EQUIPMENT/FAB.		1/2"	1"			DRAIN TO FLOOR SINK
13	1	•			•		REFRIGERATOR	SOUTHERN EQUIPMENT/FAB.						
14	1	•			•		SIDE. SHELF, TELEPOLE & MON. SHELF	SOUTHERN EQUIPMENT/FAB.						
15	1	•			•		6'-0" ONE COMPARTMENT VEG. SINK	SOUTHERN EQUIPMENT/FAB.	1/2"	1/2"	2"			DRAIN LINE TO ABOVE CENTERLINE OF FLOOR SINK
16	1	•			•		10'-0" THREE COMPARTMENT SINK	SOUTHERN EQUIPMENT/FAB.	3/8 1/2"	3/8 1/2"	3/8 2"			WITH GOOSE NECK FAUCET WITH 5" SPRAY
17	1			•	•		FOOD CHOPPER NSF # 330	HOBART/1812					120V/60HZ/1PH	1 HP
18	1			•	•		TACO RACKS NSF # 102	4-UNIT MOLE/NTRH-4-0				3/4"		
19	1	•			•		EXHAUST HOOD	DELFIELD CO.						AIR CURTAIN/VAPOR PROOF LIGHT FIXTURES
20	2			•	•		FRYER NSF # 5/3	FYRMASTER/MJ45E				3/4"	120V/60HZ/1PH	WITH FILTER MAGIC SYSTEM
21	1	•			•		WORK TABLE NSF # 104	SOUTHERN EQUIPMENT/FAB.						2'-6"Wx1'-0"L W/ CASTERS (1 TO BE 3'-8"L)
22	1	•			•		UNION DICER	KEEN CUT MODEL D						WALL MOUNTED - PROVIDE BLOCKING
23	1		•		•		FIRE SUPPRESSION SYSTEM	ANSUL/R-101-30						TANKS, PULL, AND SUPPLY PIPING
24	1			•	•		WALK-IN COOLER	VOLRATH, INC.			3/4"			7'-0"x13'-6"x8'-7" REFER TO 4/A9.2
														ASSEMBLY BY G.C.
														R MECHANICAL CONTRACTOR TO PROVIDE & INSTALL
														1 FLOOR SINK REFER TO SHEET # P-1
														FLAME SPREAD RATING OF NOT MORE THAN 75 SMOKE
25	LOT			•	•		CORR-PROOF WIRE SHELVING							DEVELOPED RATING OF NOT MORE THAN 450
26			•		•		7-DAY CYCLE EXTERIOR LIGHT CONTROLLER	SUBMIT FOR APPROVAL						WITH PHOTO ELECTRIC OVERIDE
27	1		•		•		HAND HELD FIRE EXTINGUISHER	40 BC						VERIFY WITH FIRE MARSHALL
28	1			•	•		18"x30" WIRE SHELVING	INTERMETRO INDUSTRIES						FULL HEIGHT
29	5			•	•		18"x42" WIRE SHELVING	INTERMETRO INDUSTRIES						FULL HEIGHT
30	2			•	•		18"x36" WIRE SHELVING	INTERMETRO INDUSTRIES						FULL HEIGHT
31	3			•	•		18"x60" WIRE SHELVING	INTERMETRO INDUSTRIES						FULL HEIGHT
32	1	•			•		26"x18" UTILITY SINK	SOUTHERN EQUIPMENT/FAB.	1/2"	1/2"	2"			W/ 3" HOSE DRAIN LINE TO ABOVE FLOOR SINK
33	1				•		HAND SINK 15"x15"	STAINLESS STEEL	1/2"	1/2"	1/4"			WITH GOOSE NECK SPOUT
34	1		•		•		GAS, WATER, HEATER & SEISMIC RESTRAINT SYSTEM							GAS, WATER, HEATER TO BE APPROVED BY THE
35	1		•		•		PAPER TOWEL DISPENSER	BOBRICK/B-262						ARCHITECT
36	2			•	•		TACO STORAGE CABINET	FABRICATED						32"W x 23"D x 72"H
37	1			•	•		WORK TABLE	FABRICATED						
38	2			•	•		ELECTRIC CLOCK							10" x 10"
39	1			•	•		EVAP. COIL	VOLLRATH, INC.						TO BE SUPPLIED W/ WALKIN COOLER (ITEM # 24)
40	1		•		•		EMPLOYEE COUNTER	FORMICA/346-65						FAB. & ASSEMBLY BY G.C. SUBMIT SHOP DWGS.
41	1				•		MIRROR AT INSIDE OF CABINET DOOR	BOBRICK/B165 FIELD VER. SIZE						FOR APPROVAL
42	4			•	•		BULLETIN BOARD							REFER TO INT. ELEV. FOR SIZES
43	1		•		•		METAL ACCESS LADDER TO ROOF							CONTRACTOR TO PROVIDE & INSTALL ALL PARTS
44	1			•	•		CAN OPENER	EULIND # 2						AND BLKG. IN WALL AS REQUIRED.
45	1			•	•		KNIFE RACK	HALCO/HKP-123						
46	1			•	•		FIRST AID KIT	9 1/2" x 14" x 2 3/4"						ON SHELF UNDER CABINET
47	1		•		•		HAND HELD FIRE EXTINGUISHER	2A-10 BC RATING						VERIFY WITH FIRE MARSHALL
48	1		•		•		DESK COUNTER TOP	FORMICA/346-65						FAB. & ASSEMBLY BY G.C. SUBMIT SHOP DWGS.
49			•		•		WALL HUNG CABINETS	FORMICA/346-65						FAB. & ASSEMBLY BY G.C. SUBMIT SHOP DWGS.
50	1			•	•		TIME CARD RACK							
51	1			•	•		KNIFE SHARPENER	HALCO/ 800 KS						MOUNT UNDER SHELF
52	1		•		•		EQUIPMENT SHELF	FABRICATED						SST. TOP REF. TO ARCH DETAILS 3/A9.4,
53	1			•		•	ICE TEA DISPENSER							7/A9.4 & 10/A9.4 SUBMIT SHOP DWGS. F/APPROVAL
54	10	•			•		CUP DISPENSERS	SHELLY MFG. CO. OR APPR. EQ.						TYPE 302 STAINLESS STEEL
55	15 3/4	•			•		2"x2"x4'-0" SST CORNER	FABRICATED						TYPE 302 STAINLESS STEEL
56	1		•		•		SOAP DISPENSER							SUBMIT FOR APPROVAL
57	4			•	•		18" x 48" WIRE SHELVING	INTERMETRO INDUSTRIES						BELOW COUNTER 34 1/2" HIGH
58	2			•	•		BAG SHELF							
59	1			•	•		MENU BOARD							
60	3			•	•		P.O.P. BOARD							
61	1			•		•	SAFE	ALLIED/GARY SAFE & VAULT CO.						BELOW COUNTER
62	1		•		•		COIN OPERATED PUSHBUTTON TEL.							SUBMIT FOR APPROVAL
63	1		•		•		MOP & BROOM BRACKET							SUBMIT FOR APPROVAL
64	2		•		•		RECESSED SOAP DISPENSER	BOBRICK/B305						
65	2		•		•		PAPER TOWEL DISP. & TRASH RECP.	BOBRICK/B39944						
66	2		•		•		TOILET TISSUE DISPENSER	BOBRICK/B388						
67	3			•		•	CASH REGISTER							SYSTEM
68	2		•		•		MIRROR	BOBRICK/B165-1830						
69	LOT		•		•		SEISMIC RESTRAINT SYS. F/TANKS							TO BE APPROVED BY ARCHITECT, G.C. TO PROVIDE
														& INSTALL BLKG. IN WALL AS REQUIRED
70	1		•		•		COAT RACK							SUBMIT FOR APPROVAL
71	5			•		•	CASH DRAWER	TSANTI 29						PART OF ITEM # 67 SYSTEM
72	1			•	•		SOFTDRINK, SYRUP RACK							
73	1			•	•		SODA PUMP							
74			•		•		IRRIGATION CONTROLLER	SUBMIT FOR APPROVAL						
75	1			•	•		FAJITA COOKER	FYRMASTER			3/4"		120V/60HZ/1PH	
76	1	•			•		WORK TABLE	FABRICATED						VERIFY SIZE
77	1				•		FREEZER						115V./12A	SUPPLIED BY OWNER

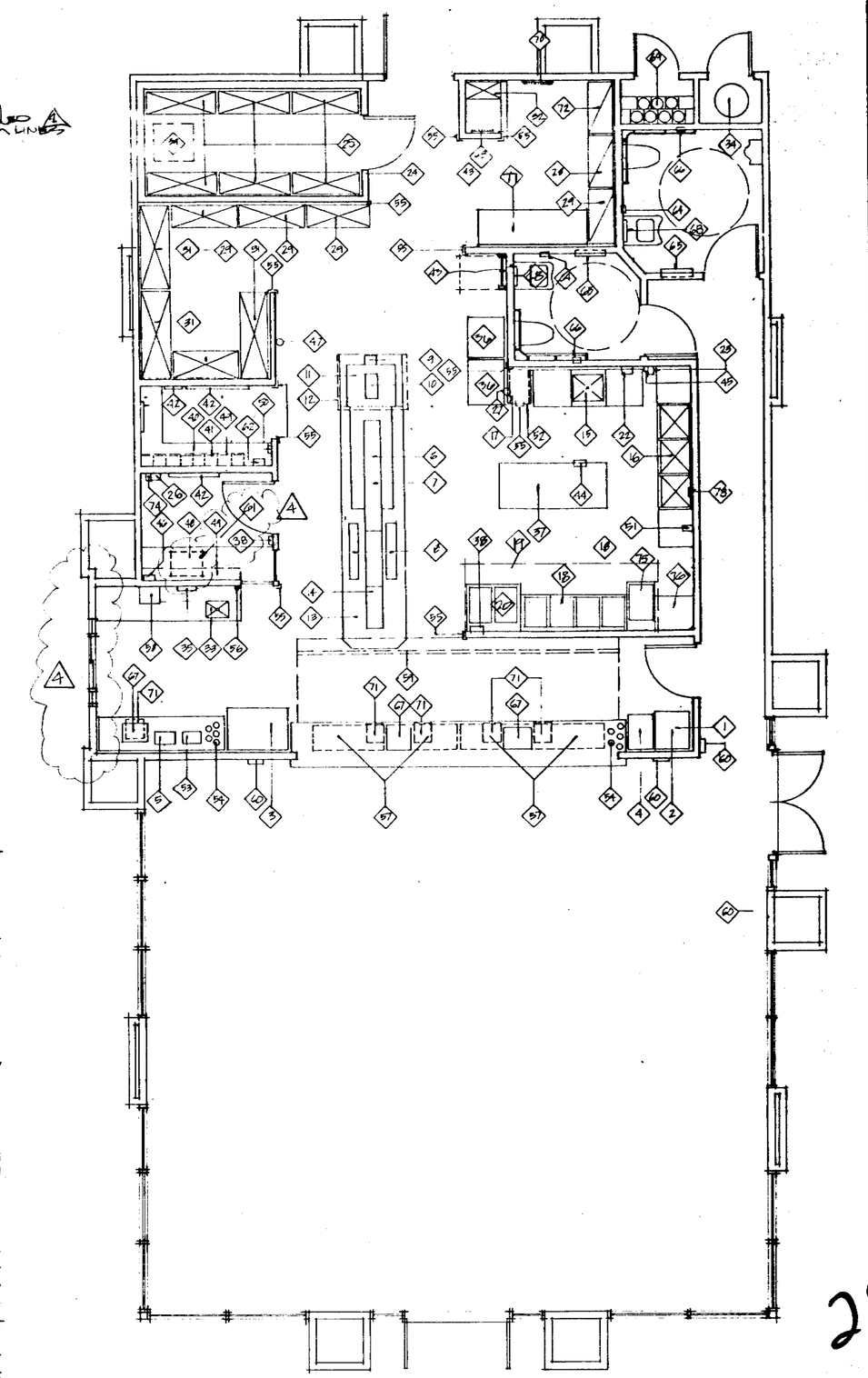

EQUIPMENT PLAN 1 / A11

SCALE: 1/4"=1'-0"

70673-1976

EQUIPMENT PLAN AND SCHEDULE

REVISIONS	BY
1 FIRE 9-7-87	MS
2 LOCATION 10-22-87	MS
3 1-19-88	DA

Backhaus Associates
Architecture - Landscape Architecture - Planning
844 Seventeenth Avenue Santa Cruz, California 95062 408-462-1870

REGISTERED ARCHITECT TIMOTHY V. SUNDBERG C-11058 STATE OF CALIFORNIA

Job Name:
TACO BELL
ALUM ROCK AVE.
SAN JOSE, CA

27

DRAWN	
CHECKED	
DATE	
SCALE	
JOB NO.	
SHEET	A11
OF	SHEETS

SHEET NOTES

1. MECHANICAL EQUIPMENT, REFER TO SHEET M2
2. 'ACA PRODUCTS' BE GE-LEN ROOFING MEMBRANE SYSTEM. CLASS A OR B FIRE RESISTIVE (VERIFY W/ MFGR.)
3. LIFE TILE MISSION RED FLASHED #106 (EQUAL TO MONIER MISSION CORDOVA) SUBMIT TO ARCHITECT FOR APPROVAL.
4. 2X8 RWD CAP OVER 25 GA. G.I. PAINTED CAP FLASHING SECURE WITH CLEATS.
5. TECH SPECIALTIES ROOF DRAIN SYSTEM T0003 WITH OVERFLOW DRAIN AND GRATES, TYP. OF 4.
6. ROOF MEMBRANE SYSTEM OVER PLYWOOD CANT. SLOPE TO DRAIN
7. 4" CANT.
8. ROOF HATCH, MAKE NO VENT PENETRATIONS WITHIN 6 FEET OF ROOF HATCH.
9. CONCEALED DRAIN (THROUGH WALL BELOW)
10. LINE OF EXTERIOR FACE OF BUILDING WALLS.
11. 24 GA. G.I. SHEET METAL GUTTER.
12. LOUVERED ATTIC VENTS @ 10'-0" O.C.

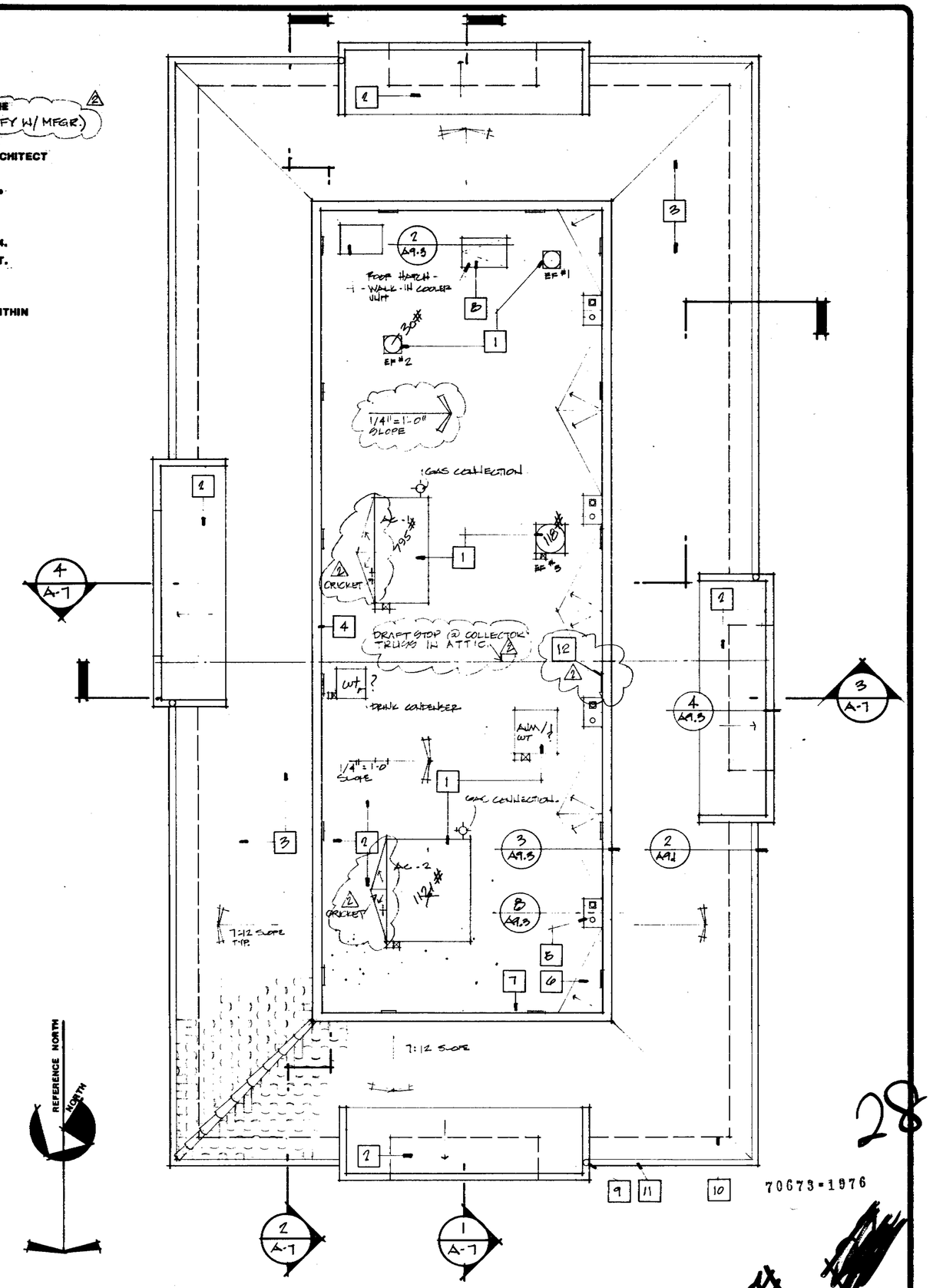

ROOF PLAN

28

REVISIONS	BY
1 11-17-87	PB

REGISTERED ARCHITECT MARK T. SUNDBERG C-11038 JAN. 26 1988 STATE OF CALIFORNIA

TACO BELL
ALUM ROCK AVE.
SAN JOSE, CA

DRAWN C.P.
CHECKED M.V.S.
DATE
SCALE 1/4" = 1'-0"
JOB NO.
SHEET A 12
OF SHEETS

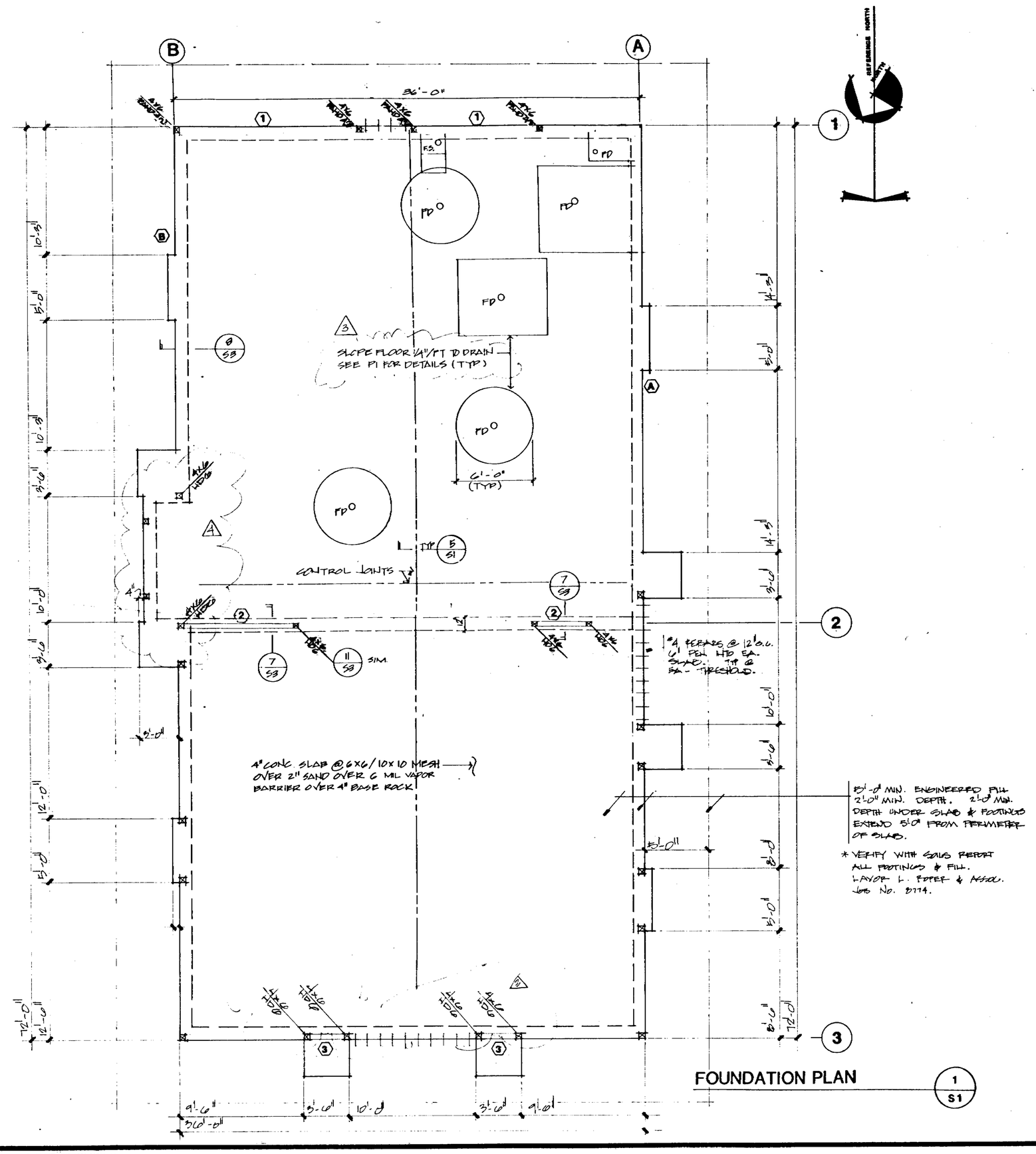

FOUNDATION PLAN 1/S1

SHEAR WALL SCHEDULE

1 SHEAR WALL @ LINE 1

3/8" thk. plywood, CDX, with 8d common nails at 6" o.c. at panel edges and at 12" o.c. at field. (One side only)
Mudsill Anchors ~~- 5/8" dia. x 10"~~ long at 48" o.c. max.
HOLDOWNS - PAHD 42

2 SHEAR WALL @ LINE 2

3/8" thk. plywood, CDX at serving area side of wall with 8d common nails at 2½" o.c. at panel edges and at 12" o.c. at field.
MUDSILL ANCHORS - 5/8" dia. x 10" long at 32" o.c.
HOLDOWNS - Simpson ~~HDU8~~ on 6 x 6 post.
TOP PLATE CONNECTION TO BOTTOM OF TRUSS - Simpson A35 at 12" o.c.
NOTE: Provide Truss collector on top of shear wall and extend 3/8" plywood to truss on one side and nail with 8d common nails at 4" o.c./12" o.c.

3 SHEAR WALL @ LINE 3

3/8" thk. plywood CDX at one side, with 8d common nails at 2½" o.c. at panel edges and at 12" o.c. at field.
MUDSILL ANCHORS - 5/8" dia. x 10" long - 2 min. ea. wall
HOLDOWNS - Simpson ~~HDU~~ on 6 x 6 post.

A SHEAR WALL @ LINE A

3/8" thk. plywood CDX with 8d common nails at 6" o.c. at panel edges and at 12" o.c. at field. (One side only).
MUDSILL ANCHORS - 5/8" dia. x 10" long at 48" o.c.
HOLDOWNS - not required

B SHEAR WALL @ LINE B

3/8" thk. plywood CDX at one side with 8d nails at 6" o.c. at edges and at 12" at field.
MUDSILL ANCHORS - 5/8" dia. x 10" long at 4'-0" o.c.
HOLDOWNS - not required

GENERAL NOTES

A. FOUNDATION AND SLAB ON GRADE

1. Design of foundation system is based on an allowable soil pressure of 2000 psf for dead plus live load. Refer to soil report by GILES ENGINEERING ASSOCIATES, INC. Job # C-850705.
2. Concrete for foundation and slab on grade shall have a minimum compressive strength of 2000 psi at 28 days.
3. Reinforcing steel bars shall be deformed bars conforming to ASTM A615, Grade 40. Lap splices shall not be less than 30 bar diameter nor 18 inches which ever is greater.
4. Concrete foundation shall bear on undisturbed soil. Any over-excavation shall be filled with lean concrete mix.

70679-1976

B STRUCTURAL FRAMING

1. Wood Framing members shall be Douglas Fir of the following grades unless otherwise shown:

CLASSIFICATION	GRADE
Studs	No. 2 DF
Structural Light Framing	No. 2 DF
Post and Timbers	No. 1 DF
Beams and Stringers	No. 1 DF

2. Plywood sheathing shall be 1/2 inch thick, APA Rated Sheathing Panel Index (24/0), Exposure 1. Each panel shall be identified with the appropriate trademark of the AMERICAN PLYWOOD ASSOC. and shall meet the requirements of the latest edition of A199.1 or one of APA's Performance Standards.
3. Roof trusses shall be open web trusses. Design of roof trusses shall be by truss manufacturer. Truss drawings and analysis shall be approved by the Engineer prior to fabrication. Roof trusses shall be designed for 20 psf dead load (including truss weight) plus 20 psf live load. Deflection shall be limited to L/240 for DL + LL. Carrier trusses carrying concentrated loads in addition to above mentioned loads shall be designed to carry additional loads without increase in deflection.
4. Glu-laminated beams shall conform to the requirements of PRODUCT STANDARD PS 56-73, "Structural Glued Laminated Timber" Fb = 2400 psi, Fv = 165 psi, Fc = 450 psi, E = 1,800,000 psi.
5. All nailings, unless otherwise shown in the drawings shall be in accordance with Table No. 25P (Nailing Schedule) of the 1982 Uniform Building Code.
6. Mudsill shall be Douglas Fir pressure treated timber or Redwood foundation grade.
7. All anchor bolts shall be 5/8" diameter x 8" long conforming to ASTM A307. Spacing of anchor bolts shall be 5'-0" o.c. maximum unless otherwise noted in the shear wall schedule or in the drawings.

* PROVIDE CERTIFICATES OF FABRICATION TO CITY OF S.J. UPON INSTALLATION.

FOUNDATION PLAN

REVISIONS	BY
~~SLOPE SLOPE SF FLR.~~	DA 12/8
1-19-88	DA

Backhaus Associates
Architecture - Landscape Architecture - Planning
844 Seventeenth Avenue Santa Cruz, California 95062 408-462-1870

REGISTERED ARCHITECT MARK J. SUNDBERG C-11038 STATE OF CALIFORNIA

Job Name:
TACO BELL
ALUM ROCK AVE.
- SAN JOSE, CA

DRAWN	
CHECKED	
DATE	
SCALE	
JOB NO.	
SHEET	S1
OF	SHEETS

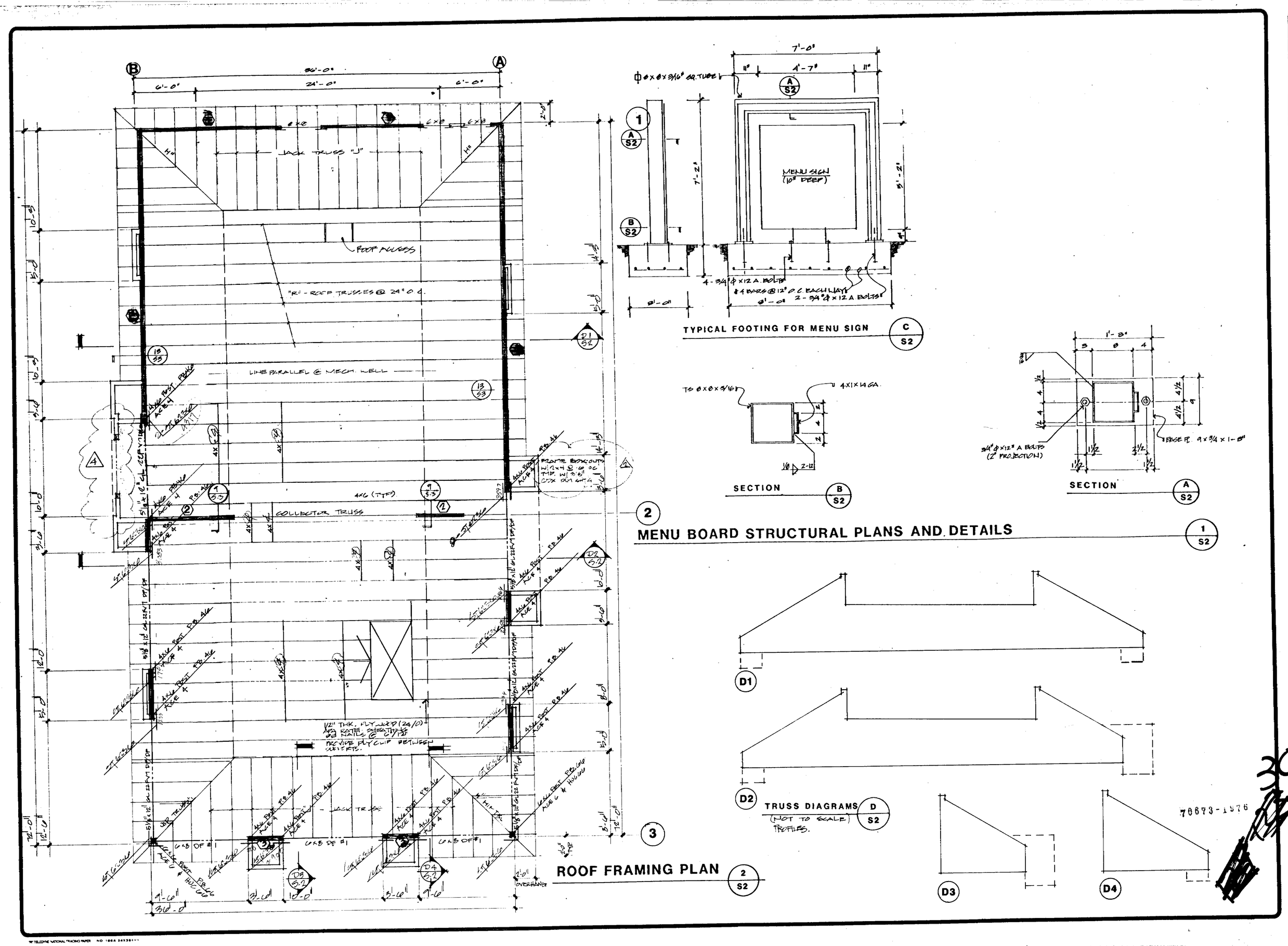

ROOF FRAMING PLAN (2/S2)

TYPICAL FOOTING FOR MENU SIGN (C/S2)

SECTION (B/S2)

SECTION (A/S2)

MENU BOARD STRUCTURAL PLANS AND DETAILS (1/S2)

TRUSS DIAGRAMS (D/S2)
(NOT TO SCALE)
PROFILES.

70673-1976

REVISIONS	BY
12-87	MS
1-19-88	DA

Backhaus Associates
Architecture - Landscape Architecture - Planning
844 Seventeenth Avenue Santa Cruz, California 95062 408-462-1870

REGISTERED ARCHITECT
HARRY V. SUNDBERG
C-11038
STATE OF CALIFORNIA

Job Name:
TACO BELL
ALUM ROCK AVE.
SAN JOSE, CA

DRAWN
CHECKED
DATE
SCALE
JOB NO.
SHEET
S2
OF

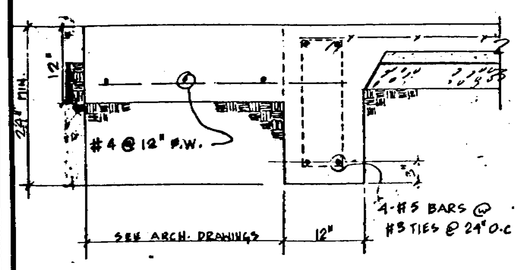

FOOTING AT TOWER (1 / S3)

SCALE 1"=1'-0"

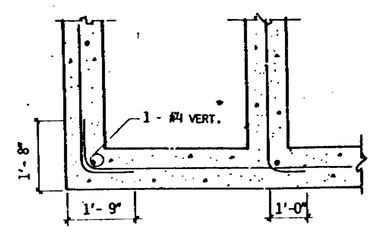

PLAN SECTION AT FOOTING (2 / S3)

SCALE 1/2"=1'-0"

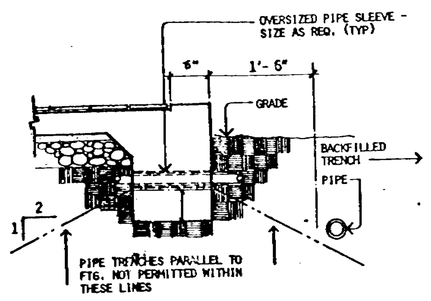

PIPE EXCLUSION DETAIL (6 / S3)

SCALE 1"=1'-0"

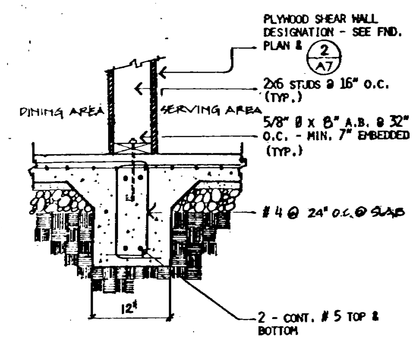

INTERIOR FOOTING (7 / S3)

SCALE 1"=1'-0"

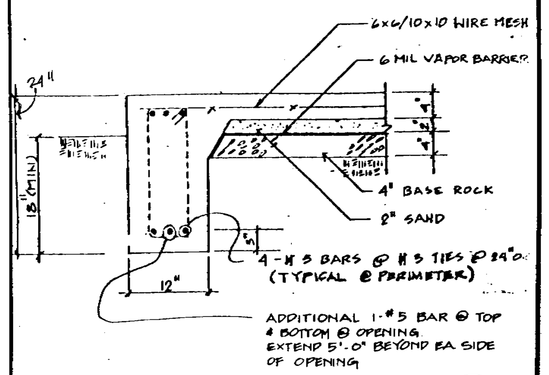

PERIMETER FTG. AT OPENING (#0 / S3)

SCALE 1" = 1'- 0"

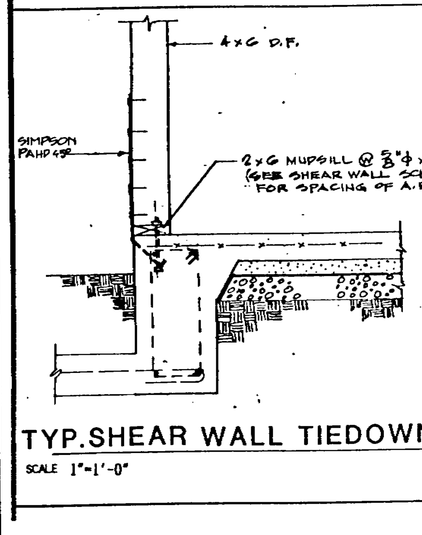

TYP. SHEAR WALL TIEDOWN (11 / S3)

SCALE 1"=1'-0"

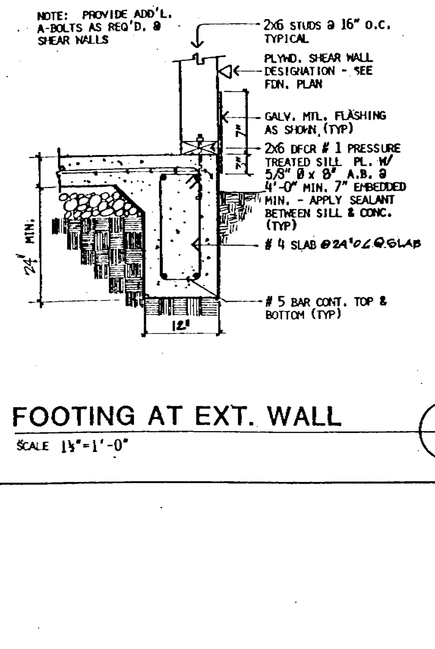

FOOTING AT EXT. WALL (8 / S3)

SCALE 1½"=1'-0"

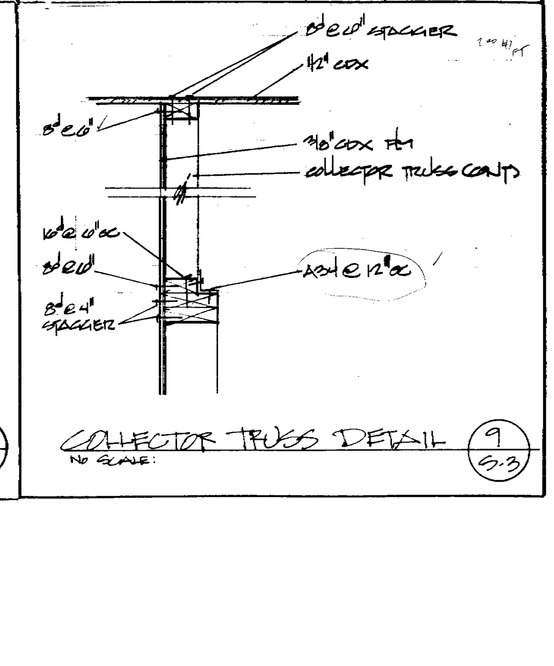

COLLECTOR TRUSS DETAIL (9 / S.3)

No SCALE

70673-1976

STRUCTURAL DETAILS

REVISIONS	BY

Backhaus Associates
Architecture - Landscape Architecture - Planning
844 Seventeenth Avenue Santa Cruz, California 95062 408-462-1870

REGISTERED ARCHITECT MARK V. SUNDBERG C-11038 STATE OF CALIFORNIA

Job Name:
TACO BELL
ALUM ROCK AVE.
SAN JOSE, CA

DRAWN	
CHECKED	
DATE	
SCALE	
JOB NO.	
SHEET	S.3
OF	SHEETS

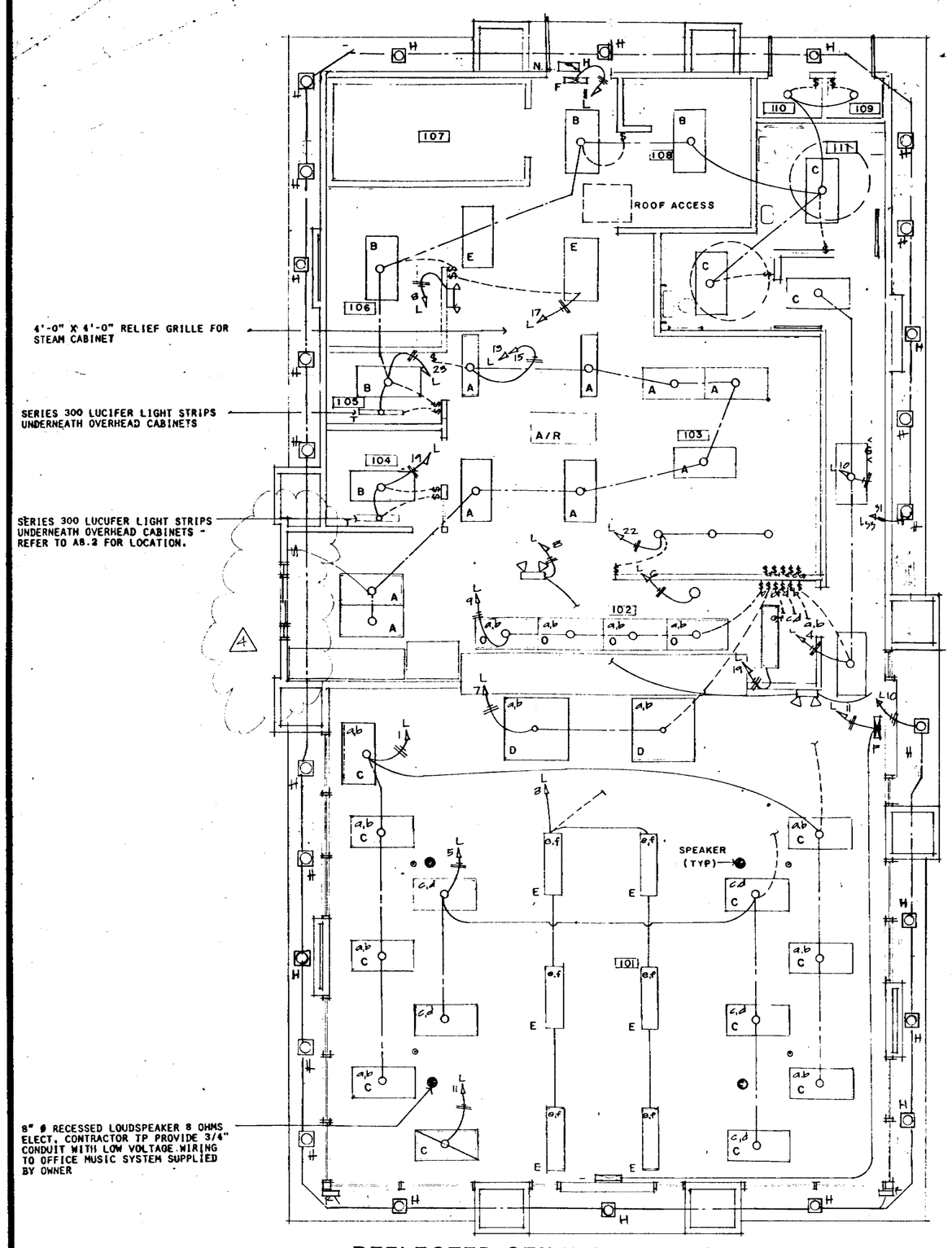

REFLECTED CEILING AND LIGHTING PLAN

GENERAL NOTES

1. ALL ELECTRICAL WORK TO CONFORM TO ALL LOCAL CODES AND LOCAL UTILITY COMPANY REQUIREMENTS.
2. CONTRACTOR SHALL VERIFY LOCATION OF PARKING LOT LIGHTS AND PYLON SIGNS ON SIGHT PLAN.
3. CONTRACTOR SHALL VERIFY SERVICE VOLTAGE w/ UTILITY COMPANY & CONFORM TO ALL UTILITY COMPANY REQUIREMENTS.
4. ALL REMOTE EQUIPMENT ON ROOF SHALL HAVE DISC. SWITCH @ EA. PIECE OF EQUIPMENT.
5. ALL EXTERIOR RECEPTACLES, JUNCTION BOXES AND EQUIPMENT SHALL BE WEATHERPROOF.
6. ALL CONDUIT AND JUNCTION BOXES ARE TO BE RECESSED WHERE POSSIBLE AND ALLOWABLE BY CODE.
7. INSULATE ALL CONDUIT PASSING THROUGH WALK IN COOLER. FILL AROUND CONDUIT WITH DUCK-SEAL WHERE IT PASSES THROUGH COOLER WALL OR CEILING.
8. CONTRACTOR SHALL INSTALL 2-8" ø X 8 OHM LOUDSPEAKERS WITH GRILLE, LOCATE AS PER PLAN SHT. - 1 STUB OUT LOW VOLTAGE WIRING IN OFFICE FOR FUTURE MUSIC SYSTEM RUN IN 3/4" ø CONDUIT.
9. REFER TO SHEET M-1 ø EQ. - I FOR LOCATION OF THERMOSTATS, UNIT AND OTHER SPECIAL EQUIPMENT.
10. PANELBOARD AND SERVICE SWITCHS SHALL BE SQUARE 'D' PETERSON PANEL OR PLANS APPROVED BY ARCHITECT AND OWNER. CIRCUIT BREAKER SHALL BE SWITCH DUTY - "SD" UL APPROVED FOR USE AS SWITCHES.
11. ALL WIRING SHALL BE TYPE THHW OR TYPE THWN. ALL CONDUCTORS TO BE COPPER.
12. STARTERS AND RELATED WIRING SHALL BE INSTALLED BY ELECTRICAL CONTRACTOR. OVERLOAD UNITS SHALL BE INSTALLED AS PER GIVEN NAME PLATE DATA ON EQUIPMENT. STARTERS SHALL BE FURNISHED BY MECHANICAL CONTRACTOR.
13. THE EQUIPMNET ROUGH-INS ARE ACCURATE TO THE BEST OF OUR KNOWLEDGE. HOWEVER IN SOME INSTANCES THE OWNER OR SUPPLIER MAY SUBSTITUTE OR, THE EQUIPMENT MAY VARY FROM WHAT IS SHOWN THEREFORE THE CONTRACTOR SHALL VERIFY ALL CRITICAL DIMENSIONS W/ THE OWNER PRIOR TO CONSTRUCTION. FAILURE OF THE CONTRACTOR TO VERIFY THESE DIMENSIONS SHALL PLACE THE RESPONSIBILITY FOR SUBSEQUENT RELOCATION DIRECTLY UPON THE CONTRACTOR.
14. PROVIDE FOR CONNECTION OF FIRE SUPPRESSION SYSTEM ON HOOD.
15. VERIFY EXACT ELECTRICAL REQUIREMENTS OF ALL EQUIPMENTS TO BE BY OTHERS. ELECTRICAL CONTRACTOR SHALL BE RESPONSIBLE FOR PROPER COORDINATION WITH THE EQUIPMENT SUPPLIER.
16. FLOURESCENT LAMPS SHALL BE WATT-MISER ENERGY SAVER TYPE.
17. FLOURESCENT BALLASTS SHALL BE SOLID STATE TYPE SYLVANIA OR APPROVED EQUAL.
18. PROVIDE W.P. RECEPTACLE @ ROOF PER UMC REQUIREMENT.
19. LIGHTING SHALL BE DOUBLE SW. FOR ALL RM. OVER 100 SQ. FT./ TITLE 24 C.A.C.
20. ELECTRICAL CONTRACTOR TO LAY OUT PANELS AND BALANCE LOADS PER BUILDING DEPT. REQUIREMENTS.
21. MAX. SWITCH HEIGHT +48" - MIN. 36" A.F.F. MIN. OUTLET HEIGHT +12" A.F.F.

NOTE:

REFER TO HVAC ROOF PLAN FOR ROOF LIGHTS- SHEET M2

ELECTRICAL LEGEND

	FLOURESCENT LIGHTING FIXTURE. SURFACE MOUNTED-SEE FIXTURE SCHEDULE
	FLOURESCENT LIGHTING. RECESSED - SEE FIXTURE SCHEDULE
	INCANDESCENT LIGHTING FIXTURE. CEILING MOUNTED-SEE FIXTURE SCHEDULE
	INCANDESCENT LIGHTING FIXTURE. WALL MOUNTED-SEE FIXTURE SCHEDULE
	INCANDESCENT LIGHTING FIXTURE. RECESSED-SEE FIXTURE SCHEDULE
S_1	SINGLE POLE TOGGLE SWITCH +48"
S_2	TWO POLE TOGGLE SWITCH +48"
S_3	THREE WAY TOGGLE SWITCH +48"
S_4	FOUR WAY TOGGLE SWITCH +48"
	CEILING MOUNTED EXHAUST FAN-N.I.E.S.-CONNECT AS REQUIRED
	CONCRETE PULL BOX-SIZE AS NOTED, N-16 SHOWN-W/TIE-DOWN HARDWARE & "ELECT." LID
TS	TIME SWITCH-SANGAMO #WZ-11NL, ASTRO DIAL, CARRYOVER, SEP. BYPASS SW.
a, k, p	SWITCH SUBSCRIPTS - a = DEVICE CONTROLLED, k = KEY, p = PILOT LIGHT
	DUPLEX RECEPTACLE +12"
	FLOOR TELEPHONE RECEPTACLE - WALKER NO. 718AL-G
	FLOOR POWER RECEPTACLE - WALKER NO. 713ALDPSG-G
	UNDERFLOOR RACEWAY - WALKER NO. 4
	50 AMP, 4 WIRE, GROUND RECEPTACLE - A & H#5754 WITH#5714 CORD SET
	30 AMP, 4 WIRE, GROUND RECEPTACLE - A & H#5744 WITH#5715 CORD SET
	JUNCTION BOX - SIZE AND TYPE AS REQUIRED.
	FLOOR JUNCTION BOX - WALKER 800, WITH ABANDON PLUG
	PANELBOARD - SEE SCHEDULE
	CONDUIT-SURFACE MOUNTED OR ABOVE CEILING-IMC SURFACE MT., EMT W/COMP. RING FTG. ABOVE CEILING
	CONDUIT - CONCEALED BELOW FLOOR OR U.G.-EMT W/ COMP. RING FTG. U.N. FLOOR-SCH. 40PVC W/ I.M.C. ELLS U
	HOMERUN TO RESPECTIVE PANEL OR TERMINAL
NOTE	BRANCH CIRCUIT WITHOUT FURTHER DESIGNATION IS A 2#12 WIRE CIRCUIT FOR MORE THAN 2#12 WIRES AS FOLLOWS; 3#12, 4#12, ETC. FOR OTHER SIZES AS FOLLOWS; 3#10, 4#6, ETC.-3/4" CONDUIT U.N.O.
	FUSED DISCONNECT SWITCH - SIZE AS NOTED - SIZE 30A. SHOWN
	COMBINATION STARTER - SIZE AS NOTED - SIZE 3 SHOWN
	FULL VOLTAGE STARTER - SIZE AS NOTED - SIZE 3 SHOWN
	MOTOR - N.I.E.S. CONNECT AS REQUIRED
	THERMOSTAT - N.I.E.S. INSTALL AND CONNECT AS REQUIRED
	FIXTURE IDENTIFICATION - NUMERAL INDICATES LAMP WATTS, LETTER INDICATES FIX TYPE
N.I.E.S	ABBREV. FOR NOT IN ELECTRICAL SECTION OF THESE PLANS AND SPECS.
N.L.	ABBREV. FOR NIGHT LIGHT
E.L.	ABBREV. FOR EMERGENCY LIGHT
W.P.	ABBREV. FOR WEATHERPROOF
M.T.	ABBREV. FOR EMPTY CONDUIT WITH 1#12 COPPER PULL WIRE
E.P.	ABBREV. FOR EXPLOSION PROOF
▶	TELEPHONE OUTLET - 4-11/16" SQ. BOX WITH 1 DEV. RING & COVER-PULL CORD TO ABOVE CEILING

LIGHT FIXTURE SCHEDULE

MARK	SYMBOL	MANUFACTURER AND MODEL NO.	LAMP NO	LAMP TYPE	REMARKS
A	A	LITHONIA #2GS-340-FW-A12(2X4 FLOURESCENT W/ CLEAR ACRYLIC LENS .125" THICK	3	F40 CW/ WM OR SS	RECESSED W/METAL ANGLE
B	B	LITHONIA #2GS-240-FW-A12(2X4 FLOURESCENT W/ CLEAR ACRYLIC LENS .125" THICK	2	F40 CW/ WM OR SS	RECESSED W/METAL ANGLE OR RECESSED T-BAR
C	C	LITHONIA #2GS-240-FW-C70(2X4 FLOURESCENT W/ ALP-1/WHITE POLYSTERENE LENS	2	F40 CW/ WM OR SS	RECESSED T-BAR
D		ACME/LITHONIA 8046/48-AR-536 (4X4 FLOUR. W/ ALP-1/WHITE POLYSTERENE LENS	6	F40 CW/ WM OR SS	RECESSED SEE 7 A8.2
E		ACME/LITHONIA #8042-12-R4-316(4X4 FLOUR. W/ALP-1/WHITE POLYSTERENE LENS	2	F40 CW/ WM OR SS	RECESSED
F	F	LITHONIA #XSW 1-R-07-120V (EXIT SIGN W/ RED LETTERS & SINGLE FACE	2	20T6-1	SURFACE ~~FLASHLITE~~ LIGHT IN EMERGENCY
G	G	DUAL-LITE #MLV-5-12V-V (INCANDESCENT EMERGY. W/BAT. PACK & VOLTMETER	2	18W-36-PAR	SURFACE
H	H	~~BERGEN ILLUMINATION, INC.~~ WD-175-MH.	1	175 W. ~~METAL HALIDE~~	RECESSED
I	I	INCANDESCENT LIGHT	1	60W/A-19	CEILING MOUNT
J	J	BY OWNER (FLOURESCENT MENU BRD. SUPPLIED BY OWNER, INSTALLED BY G.C.)	2 8	24"T12CW 36"T12CW	WALL MOUNT
K	K	BY OWNER(EXIT/THANK YOU SEE SITE PLAN		AS REQD.	
L	L	BY OWNER(MONUMENT SIGN SEE SITE PLAN		AS REQD.	
M	M	BY OWNER (TACO BELL ENTER SIGN - SEE SITE PLAN		AS REQD.	
N	N	BEIBER/HYDE PARK METAL HALIDE PARKING LOT LIGHT	1	400W MH HP-210	14'-0" ALUM POST #1 MOUNT-BRONZE
O	O	LITHONIA #2GS-240-FW-A12(2X2 FLOURESCENT W/ ALP 1 WHITE POLYSTYRENE LENS	4	F40 CW/ WM OR SS	RECESSED W/ METAL ANGLE OR RECESSED T-BAR
P	P	BY OWNER (DRIVE UP MENU BOARD		AS REQD.	
Q	Q	LITHONIA #EA-120-AW 2' FLOUR. LAMP	1	20W	SURFACE
R		SYLVAN DESIGN S-1163W INCAND. DECORATIVE WALL MOUNT CUSTOM FIXT. W/ WHITE ACRYLIC DIFFUSER U.L. LABELLED	1	100W B-21	SURFACE WALL
S	S	BY OWNER (PADDLE FAN W/ SPEED CONTROL			CEILING MOUNT
T	T	SERIES 300 LUCIFER LT. STRIPS			UNDERNEATH OVERHEAD CABINETS

70673-1976

LIGHTING PLAN

REVISIONS	BY
1 4-17-87	EPP
2 1-19-88	EA

Backhaus Associates
Architecture - Landscape Architecture - Planning
844 Seventeenth Avenue Santa Cruz, California 95062 408-462-1870

REGISTERED ARCHITECT ROBERT T. SUNDBERG C-12050 STATE OF CALIFORNIA

Job Name: TACO BELL
ALUM ROCK AVE.
SAN JOSE, CA

DRAWN
CHECKED
DATE
JOB NO.
SHEET
32
E1
OF SHEETS

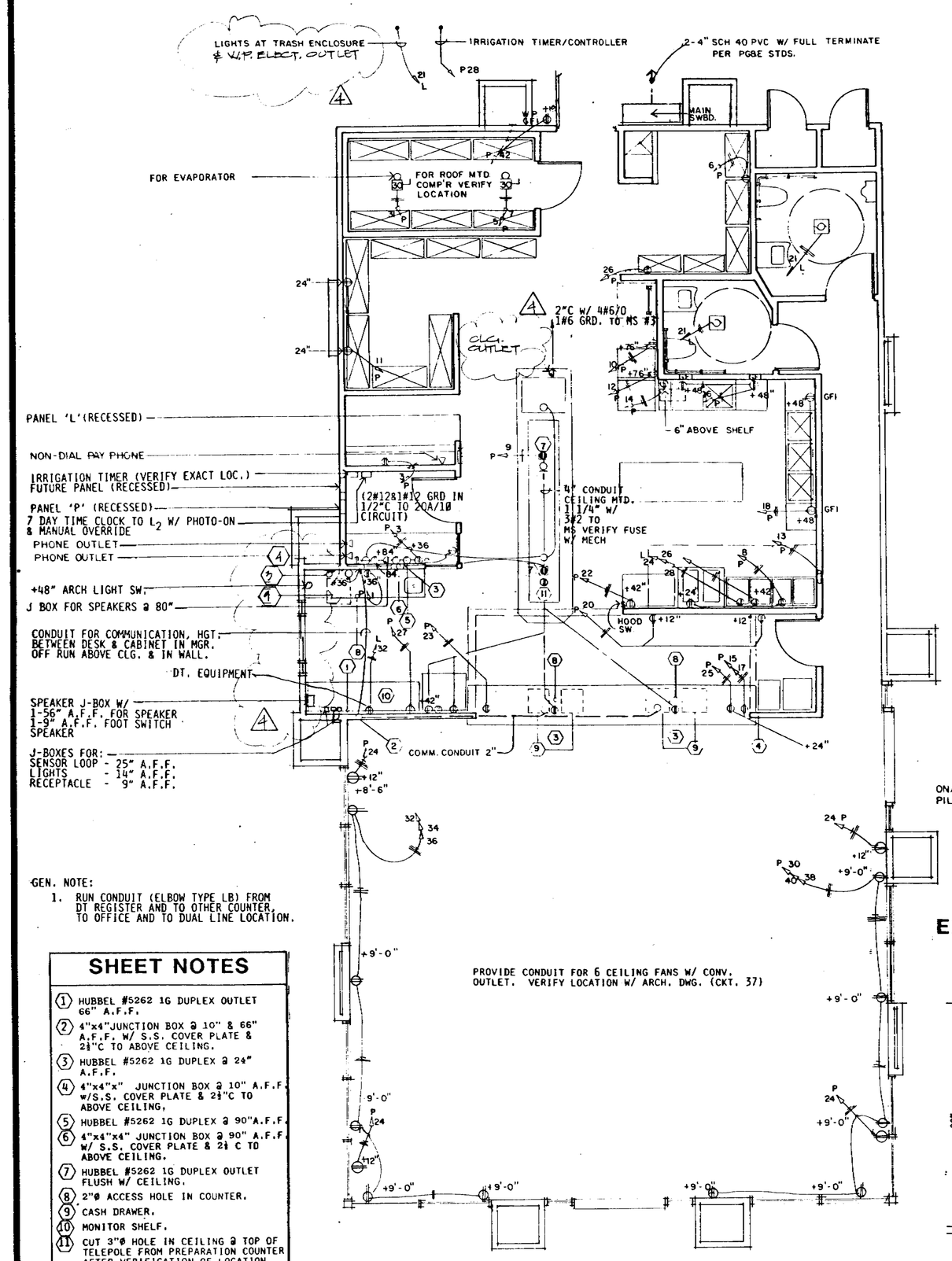

GEN. NOTE:

1. RUN CONDUIT (ELBOW TYPE LB) FROM DT REGISTER AND TO OTHER COUNTER, TO OFFICE AND TO DUAL LINE LOCATION.

SHEET NOTES

1. HUBBEL #5262 1G DUPLEX OUTLET 66" A.F.F.
2. 4"x4"JUNCTION BOX @ 10" & 66" A.F.F. W/ S.S. COVER PLATE & 2½"C TO ABOVE CEILING.
3. HUBBEL #5262 1G DUPLEX @ 24" A.F.F.
4. 4"x4"x" JUNCTION BOX @ 10" A.F.F. W/S.S. COVER PLATE & 2½"C TO ABOVE CEILING.
5. HUBBEL #5262 1G DUPLEX @ 90"A.F.F.
6. 4"x4"x4" JUNCTION BOX @ 90" A.F.F. W/ S.S. COVER PLATE & 2½ C TO ABOVE CEILING.
7. HUBBEL #5262 1G DUPLEX OUTLET FLUSH W/ CEILING.
8. 2"Ø ACCESS HOLE IN COUNTER.
9. CASH DRAWER.
10. MONITOR SHELF.
11. CUT 3"Ø HOLE IN CEILING @ TOP OF TELEPOLE FROM PREPARATION COUNTER AFTER VERIFICATION OF LOCATION.

PANEL - P

200 AMP/42 CIRCUIT CAPACITY/RECESSED PANEL LUGS ONLY 120/208 VOLTS, 3 PHASE, 4 WIRE, 60 HZ., FLUSH MOUNTED, A.I.C. 10,000 AMPS., BUSSING: 225A

CKT#	AMP TRIP	# POLES	WIRES & COND.	LOAD SERVE	WATTS A	WATTS B	WATTS C
1	20	1	2#12,1/2C	CONV. OUTLET	600		
2	20	2	2#12,1/2C	E.F. #2		700	
3	20	1	2#12,1/2C	CONV. OUTLET			400
4	20	2	2#12,1/2C	E.F. #2	700		
5	30	2	2#10,1/2C	COOLER COMP.		1920	
6	20	1	2#12,1/2C	EQUIPT. REC.			400
7	30	2	2#10,1/2C	COOLER COMP.	1920		
8	20	1	2#12,1/2C	CONV. OUTLET		400	
9 *	20	1	2#12,1/2C	CASH REG.			800
10	20	1	2#12,1/2C	EQUIPT. REC.	1200		
11	20	1	2#12,1/2C	CONV. OUTLET		500	
12	20	1	2#12,1/2C	EQUIPT. REC.			1200
13	20	1	2#12,1/2C	ANSUL SYSTEM	750		
14	20	1	2#12,1/2C	EQUIPT. REC.		1640	
15	20	2	2#12,1/2C	ICE MACHINE			1680
16	30	1	2#10,1/2C	EQUIPT. REC.	1960		
17	20	2	2#12,1/2C	ICE MACHINE		1680	
18	20	1	2#12,1/2C	EQUIPT. REC.			1200
19	20	2	2#12,1/2C	DRINK MACH. COMP.	1410		
20	20	1	2#12,1/2C	EQUIPT. REC.		700	
21	20	2	2#12,1/2C	DRINK MACH. COMP.			1410
22	20	1	2#12,1/2C	EQUIPT. REC.	600		
23	20	1	2#12,1/2C	DRINK MACH.		640	
24	20	1	2#12,1/2C	EQUIPT. REC.			900
25	20	1	2#12,1/2C	DRINK MACHREM.	640		
26	20	1	2#12,1/2C	EQUIPT. REC.		500	
27	20	1	2#12,1/2C	COFFEE MAKER			1600
28	20	1	2#12,1/2C	IRRIGATION TIMER	180		
29	20	1	C	SPARE		500	
30	20	1	2#12,1/2C	SHOW WINDOW			1600
31	30	1	2#10,1/2C	COOLER EVAP.	1920		
32	20	1	2#12,1/2C	SHOW WINDOW		1600	
33	20	1	C	SPARE			1600
34	20	1	2#12,1/2C	SHOW WINDOW	1600		
35	20	1	C	SPARE		500	
36	20	1	2#12,1/2C	SHOW WINDOW			1600
37	20	1	2#12,1/2C	SPARE	500		
38	20	1	2#12,1/2C	SHOW WINDOW		1600	
39	0		C	SPACE			00
40	20	1	2#12,1/2C	SHOW WINDOW	1600		
41	0		C	SPACE		00	
42	20	1	2#12,1/2C	ROOF & OUTSIDE REC.			1000
			WATTS/PHASE		15580	12880	15990
			TOTAL CONNECTED LOAD		44450WATTS		
			LONG CONTINUOUS LOAD @ 125%		46450WATTS		
			AMPS @ 208V , 3 PHASE		130AMPS		

DEDICATED CKT. (ISO. GRD.) WITH LOCK ON DEVICE

PANEL - L

200 AMP/42 CIRCUIT CAPACITY/RECESSED PANEL LUGS ONLY 120/208 VOLTS, 3 PHASE, 4 WIRE, 60 HZ., FLUSH MOUNTED, A.I.C. 10,000 AMPS., BUSSING: 200A

CKT#	AMP TRIP	# POLES	WIRES & COND.	LOAD SERVE	WATTS A	WATTS B	WATTS C
1	20	1	2#12,1/2C	GEN. LIGHTING	560		
2	20	1	2#12,1/2C	TIMER CLOCK		450	
3	20	1	2#12,1/2C	GEN. LIGHTING			480
4	20	1	2#12,1/2C	GEN. LIGHTING	320		
5	20	1	2#12,1/2C	GEN. LIGHTING		1180	
6	20	1	2#12,1/2C	MENU BOARD			320
7	20	1	2#12,1/2C	GEN. LIGHTING	480		
8	20	1	2#12,1/2C	ENERGCY. LTS.		600	
9	20	1	2#12,1/2C	GEN. LIGHTING			320
10 *	20	1	2#12,1/2C	EXT. LIGHTS	1320		
11	20	1	2#12,1/2C	EXIT/NIGHT LTS.		650	
12 *	20	1	2# 8,1/2C	EXT. LIGHTS			1320
13	20	1	2#12,1/2C	KITCHEN LTS.	540		
14 *	20	1	2#12,1/2C	EXT. LIGHTS		1200	
15	20	1	2#12,1/2C	KITCHEN LIGHTS			540
16 *	20	1	2#10,1/2C	EXT. LIGHTS	1440		
17	20	1	2#12,1/2C	KITCHEN LIGHTS		600	
18 *	20	1	2#10,1/2C	EXT. LIGHTS			1440
19	20	1	2#12,1/2C	OFFCIE LIGHTS	160		
20	20	1	2#10,1/2C	POLE UIR. LIGHTS		1440	
21	20	1	2#12,1/2C	E.F. BATH RMS. EXT.LTS.			380
22	20	1	2#12,1/2C	HOOD LIGHTS	180		
23	20	1	2#12,1/2C	GEN. LIGHTING		480	
24	20	3	3#12,1/2C	EXH. FAN #3			1200
25	20	3	2#12,1/2C	MAKE UP AIR	900		
26	20	3	3#12,1/2C	EXH. FAN # 3		1200	
27	20	3	2#12,1/2C	MAKE UP AIR			900
28	20	3	3#12,1/2C	EXH. FAN # 3	1200		
29 *	20	3	3#10,1/2C	MUA		900	
30	20	1	2# 8,1/2C	MENU BRD. DT SIGN			800
31 *	20	1	2#12,1/2C	EXT. DN. LTS.	800		
32	20	1	2#12,1/2C	DT EQUIPMENT		500	
33 *	20	1	2#12,1/2C	EXT. DN. LTS.			1320
34	20	1	2#12,1/2C	SPARE	500		
35	20	1	C	SPARE		500	
36TO42	20	1	C	SPARE			500
			WATTS/PHASE		8400	9700	9460
			TOTAL CONNECTED LOAD		27560 WATTS		
			LONG CONTINOUS LOAD @ 125%		29440 WATTS		
			AMPS @ 208V. , 3 PHASE		82 AMPS		

* LIGHTING CIRCUIT TO BE WIRED THRU MECH. RELAY

PANEL - MS

600 AMP/ 8 CIRCUIT CAP./ SURFACE MTD. PANEL WITH 600 AMP MAIN 208 VOLTS 3 PHASE, 4 WIRE, 60 HZ., 42,000 AMPS A.I.C. ON MAIN SWITCH BRD OR HIGHEST I.C. RATING FROM UTILITY CO. PROVIDE LIMITING FUSE OR BREAKER ON SUB-PANEL TO 10,000 AMPS.

CKT#	AMP TRIP	# POLES	WIRES & COND.	LOAD SERVE	WATTS A	WATTS B	WATTS C
1	200	3	SEE RISER	PANEL - P	16000		
	200	3	DIAG. FOR	PANEL - P		16000	
	200	3	WIRE AND	PANEL - P			16000
2	150	3	CONDUIT	PANEL - L	9600		
	150	3	SIZE INCL.	PANEL - L		9600	
	150	3	GRD. WIRE	PANEL - L			9600
3	150	3		STEAM TABLE	10800		
	150	3	SIZE	STEAM TABRE		10800	
	150	3		STEAM TABLE			10800
4	60	3		AC/1	4500		
	60	3		AC/1		4500	
	60	3		AC/1			4500
5	100	3		AC/2	5000		
	100	3		AC/2		5000	
	100	3		AC/2			5000
6	100	3		SPARE	6000		
	100	3		SPARE		6000	
	100	3		SPARE			6000
7	TO 8	3		SPARE	0	0	0
			WATTS/PHASE		45900	45900	45900
			TOTAL CONNECTED LOAD		137700 WATTS		
			LONG CONTINUOS LOAD @ 125%		152700 WATTS		
			AMPS @ 208 V , 3 PHASE		424 AMPS		

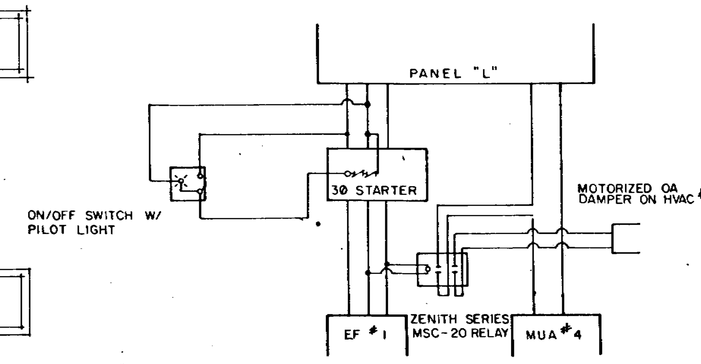

EXH.FAN /MAKE-UP AIR /DAMPER WIRING

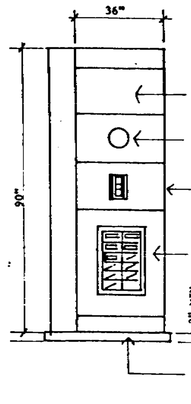

POWER RISER DIAGRAM

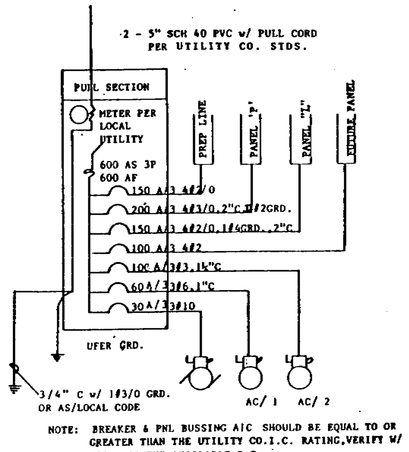

NOTE: BREAKER & PNL BUSSING AIC SHOULD BE EQUAL TO OR GREATER THAN THE UTILITY CO.I.C. RATING,VERIFY W/ PG&E FOR THE AVAILABLE I.C.

33

70673-1976

POWER PLAN

REVISIONS	BY
4 1-19-88	

Backhaus Associates
Architecture - Landscape Architecture - Planning
844 Seventeenth Avenue Santa Cruz, California 95062 408-462-1870

REGISTERED ARCHITECT MARK L. SUNDBERG JAN 26 1988 STATE OF CALIFORNIA

Job Name: TACO BELL ALUM ROCK AVE.

DRAWN
CHECKED
DATE
SCALE
JOB NO.
SHEET E2
OF SHEETS

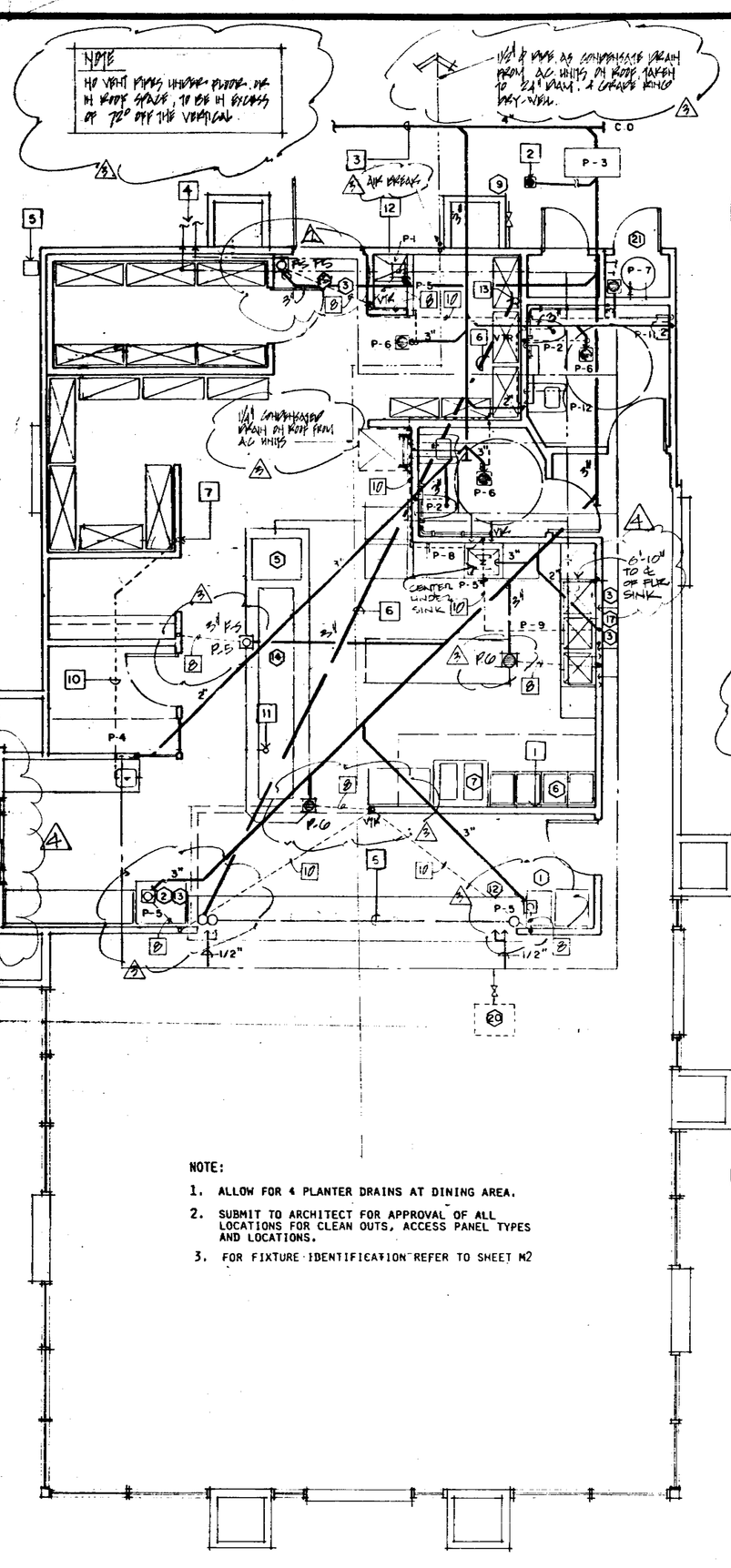

NOTE:

1. ALLOW FOR 4 PLANTER DRAINS AT DINING AREA.
2. SUBMIT TO ARCHITECT FOR APPROVAL OF ALL LOCATIONS FOR CLEAN OUTS, ACCESS PANEL TYPES AND LOCATIONS.
3. FOR FIXTURE IDENTIFICATION REFER TO SHEET M2

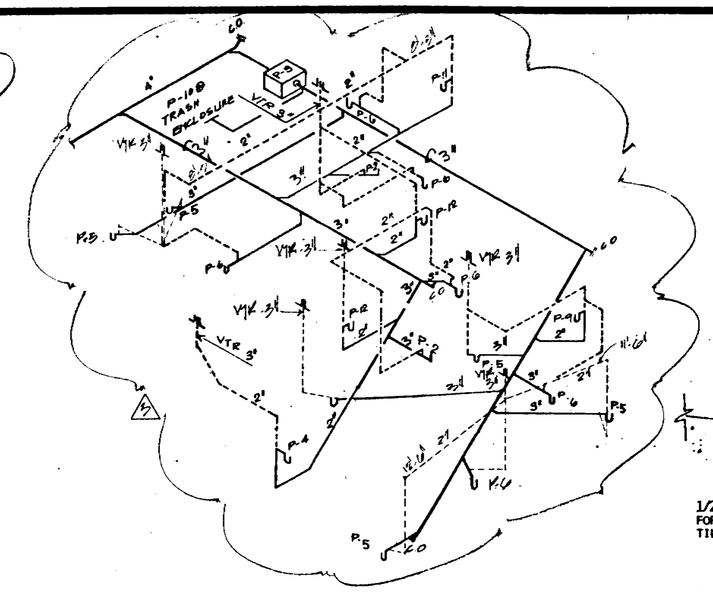

SOIL WASTE & VENT PIPING DIAGRAM

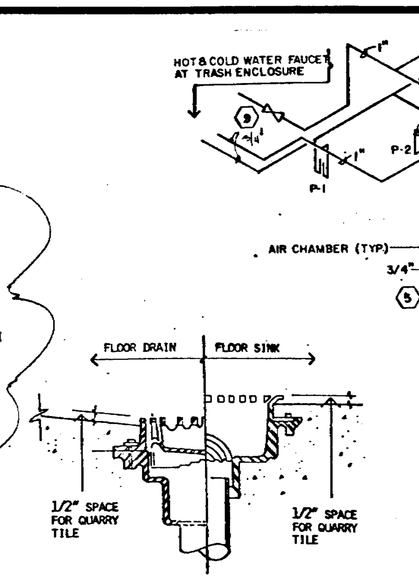

FLOOR/SINK DRAIN DETAIL

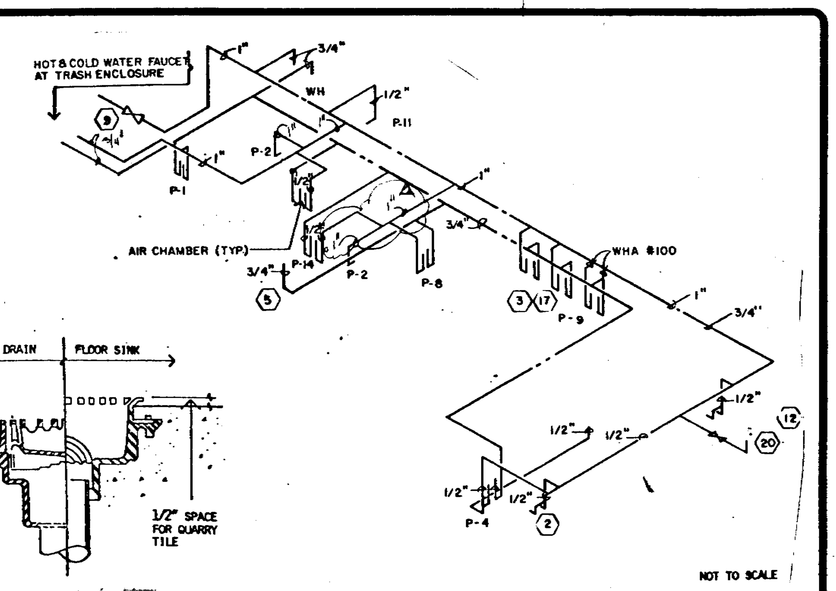

WATER PIPING DIAGRAM

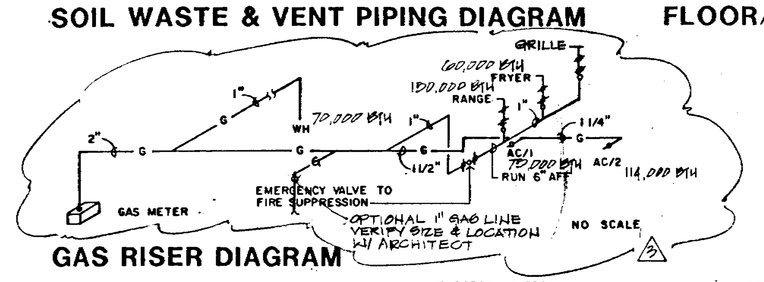

GAS RISER DIAGRAM

SHEET NOTES:

1. HOT AND COLD WATER @ 5'-6" A.F.F. & CAP IN WALL.
2. P-10 @ TRASH ENCLOSURE.
3. TO EXISTING SANITARY SEWER.
4. PROVIDE FOR CAN WASH SEE NOTE (18) NOTE MAX. DEV. LENGTH OF 170' FR. METER
5. GAS METER - PROVIDE GAS SUPPLY TO FIXTURES NOT SHOWN.
6. 6"@ PVC DRINK CONDUIT.
7. 11" VTR 10" MIN. FROM AIR INTAKE.
8. 11" VENT UNDER FLOOR
9. 11" HORIZ. VENT.
10. 2" VENT IN ATTIC (72" MAX OFF VERTICAL)
11. CW FOR PIZZA CABINET FROM UNDER SLAB.
12. P-5 ALIGN WITH P-1 DRAIN.
13. REFER TO 1-4/A6.3 & 5-4/A6.3 FOR LOCATION.

PLUMBING LEGEND

————	SOIL AND WASTE PIPING
- - - - - -	SANITARY VENT PIPING
————	COLD WATER PIPING (C.W.)
————	HOT WATER PIPING (H.W.)
——G——	GAS PIPING
	PIPE ELBOWS-HORIZ.,DOWN,UP
	PIPE TEES-HORIZ.,DOWN,UP
FD	FLOOR DRAIN
CO	CLEANOUT
H.D.	HUB DRAIN-OPEN RECEPTACLE W/ P-TRAP
V.T.R.	VENT THRU ROOF
	GATE VALVE
	GATE VALVE INVERTICAL
F.S.	FLOOR SINK

GAS PIPING NOTES:

1. PROVIDE 3/4"FLEXIBLE GAS PIPING W/ QUICK DISC. FITTINGS TO RANGE & FRYER PIPING SHOULD BE OF STAINLESS STEEL HOSE & BRAID AS MFG. BY DORMANT MANUFACTURING, PITTS., OR EQUAL, MODEL NO. SSC 1675 BPQ-BRASS.
2. ALL PIPING SHALL BE ACCESSIBLE AND EXPOSED ON THE ROOF.
3. EQUIPMENT WHICH REQUIRES QUICK DISCONNECTS SHALL COME FROM THE MANUFACTURER WITH PROPER FITTINGS.

GAS LOAD:

~~GRILLE~~	40,000 BTU
WATER HEATER	70,000 BTU
HVAC #1	75,000 BTU
HVAC #2	114,000 BTU
FRYER	60,000 BTU
RANGE	150,000 BTU
TOTAL	509,000 BTU

FIRE EXTINGUISHER SYSTEM:

SUPPLY FIRE EXTINGUISHER SYSTEM #R 101-30 RESTAURANT FIRE SUPPRESSION SYSTEM AS MFD. BY ANSUL COMPANY OR APPROVED EQUAL. FURNISH AND INSTALL ONE (1) TANK SYS. THE SYSTEM SHALL COMPLY WITH ALL LOCAL CODES & N.F.P.A. BULLETIN #96 PLUS THE FOLLOWING:

1. ALL EXPOSED PIPE SHALL BE GALVANIZED IRON.
2. INSTALL SO AS NOT TO INTERFERE WITH VENTILATOR OPERATION AND PERFORMANCE.
3. SUPPLY WALL MOUNTED 10#CO2 BC FIRE EXTINGUISHER AS SHOWN.

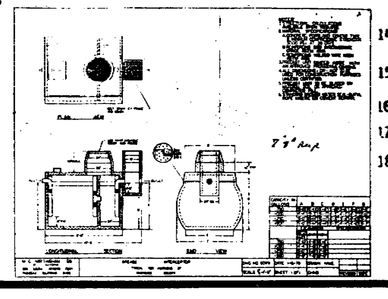

GENERAL NOTES:

1. ALL WORK TO BE PERFORMED PER APPLICABLE LOCAL AND STATE CODES.
2. WATER PIPING BELOW GRADE TO BE TYPE "K" COPPER AND ABOVE GRADE TYPE "L" COPPER.
3. ALL SANITARY WASTE LINES BELOW CONCRETE SLAB TO BE CAST IRON AND ALL OTHER SANITARY WASTE LINES ARE TO BE SCHD. 40 PVC.
4. INSTALL SHUT-OFF VALVES ON ALL HOT & COLD WATER LINES-CHROME PLATED WHERE EXPOSED.
5. INSULATE ALL HOT WATER LINES OUTDOOR/INDOOR ABOVE AND BELOW SLAB WITH 1" AEROTUBE BY JOHN MANVILLE OR APPROVED EQUAL.
6. PLUMBER SHALL KEEP ALL DRAIN, WATER AND GAS LINES TIGHT TO THE UNDERSIDE OF EQUIPMENT AND SECURELY IN PLACE.
7. ALL DRAIN LINES FROM SERVING LINE TO BE PIPED SEPARATELY TO FLOOR SINK.
8. THE EQUIPMENT ROUGH-INS AS SHOWN ARE ACCURATE TO THE BEST OF OUR KNOWLEDGE HOWEVER, IN SOME INSTANCES THE OWNER OR SUPPLIER MAY SUBSTITUTE OR THE EQUIPMENT MAY VARY FROM WHAT IS SHOWN THEREFORE THE CONTRACTOR SHALL VERIFY ALL CRITICAL DIMENSIONS WITH THE OWNER, PRIOR TO START OF CONSTRUCTION. FAILURE OF THE CONTRACTOR TO VERIFY THESE DIMENSIONS, SHALL PLACE THE RESPONSIBILITY FOR ANY RELOCATION DIRECTLY ON THE CONTRACTOR.
9. SEE ROOF PLAN FOR GAS PIPING & CONDENSATE LINES.
10. 6"@ BEVERAGE LINES MUST BE MADE OF ELECTRICAL PVC. PLUMBING PVC WILL NOT BE ACCEPTABLE.
11. HUB DRAIN TO BE 3" CAST IRON PIPE. HUB INSTALLED FLUSH W/ TILE FLOOR AND PROVIDED W/ P-TRAP.
12. SEE EQUIPMENT SUPPLIERS PLAN FOR HOT AND COLD WATER REQUIREMENTS. INSTALLATION BY PLUMBING CONTRACTOR PER ALL APPLICABLE CODES.
13. PLUMBER TO COORDINATE WITH HEAT RECOVERY EQPT. SUPPLIER INSTALLATION OF ROOF COMPRESSOR WASTE HEAT/WATER PRE-HEAT SYSTEM.
14. VENTS IN PARAPET WALLS TO BE OFFSET TO ROOF AREA IN LIEU OF PENETRATING TOP OF PARAPET.
15. SURFACE MOUNTED PIPE AND CONDUIT TO HAVE SANITARY STAND-OFFS PER STATE & LOCAL REG'S.
16. TERMINATE VENTS MIN. 12" FROM MAKE UP AIR VENTS.
17. PLUMBER TO VERIFY SELECTION OF HUB DRAINS WITH OWNER WHERE REQUIRED.
18. RUN CONDENSATE PIPING TO NEAREST DRAIN.

1. 1/2" C.W. FOR ICE MACHINE. AT +18" A.F.F.
2. 3/4" C.W. W/ 2 1/2" VALVES FOR DRINK MACHINE PROVIDE CONNECTIONS TO CARBONATOR W/A GATE VALVE SHUT-OFF +48 A.F.F. @ RCCF.
3. 1/2" C.W. & H.W. FOR UTILITY SINK @ 12" A.F.F.
4. 1/2" C.W. & H.W. FOR POT SINK @ 12" A.F.F.
5. 3/4" H.W. FROM UNDER THE SLAB TO STEAM TABLE AND STEAM CABINET.
6. 3/4"@ GAS LINES FOR RANGE 150,000 BTUH 8" A.F.F.
7. 1/2"@ GAS LINE FOR FRYER 60,000 BTUH 8" A.F.F.
8. 6" ELECT. PVC CONDUIT OVERHEAD TO 72" A.F.F.
9. 1" C.W. W/ WATER METER PER LOCAL UTILITY VERIFY LOCATION.
10. GAS SERVICE AND METER W/ LINE TO ROOF, STUB DOWN TO FRYER, RANGE AND WATER HEATER.
11. GAS LINE DOWN FROM ROOF TO FRYER AND RANGE.
12. PROVIDE 3/4" CONDENSATE LINE AND 1/2" DRAIN LINE FROM ICE MACHINE W/ 1" AIR GAP @ F.S.
13. PROVIDE 3/4"@ WASTE FROM ICE BIN TO F.S. W/ 1" AIR GAP.
14. PROVIDE 1"@ WASTE LINE FROM STEAM TABLE AND CONDIMENT BIN TO FLOOR SINK.
15. PROVIDE 3/4"@ CONDENSATE LINE FROM COOLER EVAPORATOR COIL TO F.S.
16. INDIRECT WASTE CONNECTION FOR SINK (P-8) SHALL BE SMITH #3818 DRIP FUNNELS OR APPROVED EQUAL.
17. CHICAGO FAUCET #923 PRE RINSE UNIT W/ 1/2" C.W. AND H.W.
18. 1/2" C.W. AND H.W. W/ EXPOSED FAUCET AND VACUUM BREAKER WITH LOOSE KEY HANDLES - FLOOR DRAIN (P-12) FOR TRASH ENCLOSURE.
19. 1/2" C.W. @ 18" + A.F.F.
20. 1/2" C.W. WITH SHUT-OFF @ MAKE-UP AIR UNIT @ ROOF.
21. PROVIDE FLUE VENT TO ROOF FOR WATER HEATER.

70673-1976

PLUMBING PLAN

REVISIONS	BY
1 HEALTH 8-26-87	MS
2 VENT 1-12-88	KF
3 1-19-88	KF

Backhaus Associates
Architecture - Landscape Architecture - Planning
944 Seventeenth Avenue Santa Cruz, California 95062 408-462-1870

REGISTERED ARCHITECT MARK V. SUHR C-11038 STATE OF CALIFORNIA

Job Name: TACO BELL
ALUM ROCK AVE.
SAN JOSE, CA

DRAWN
CHECKED
DATE
SCALE
JOB NO.
SHEET P1
OF SHEETS

NOTE

PROVIDE SMOKE DETECTOR AT EXH. HOOD DETECTOR TO BE IN COMPLIANCE W/ CITY FIRE & MECHANICAL DEPT SPECIFICATION REQUIREMENTS.

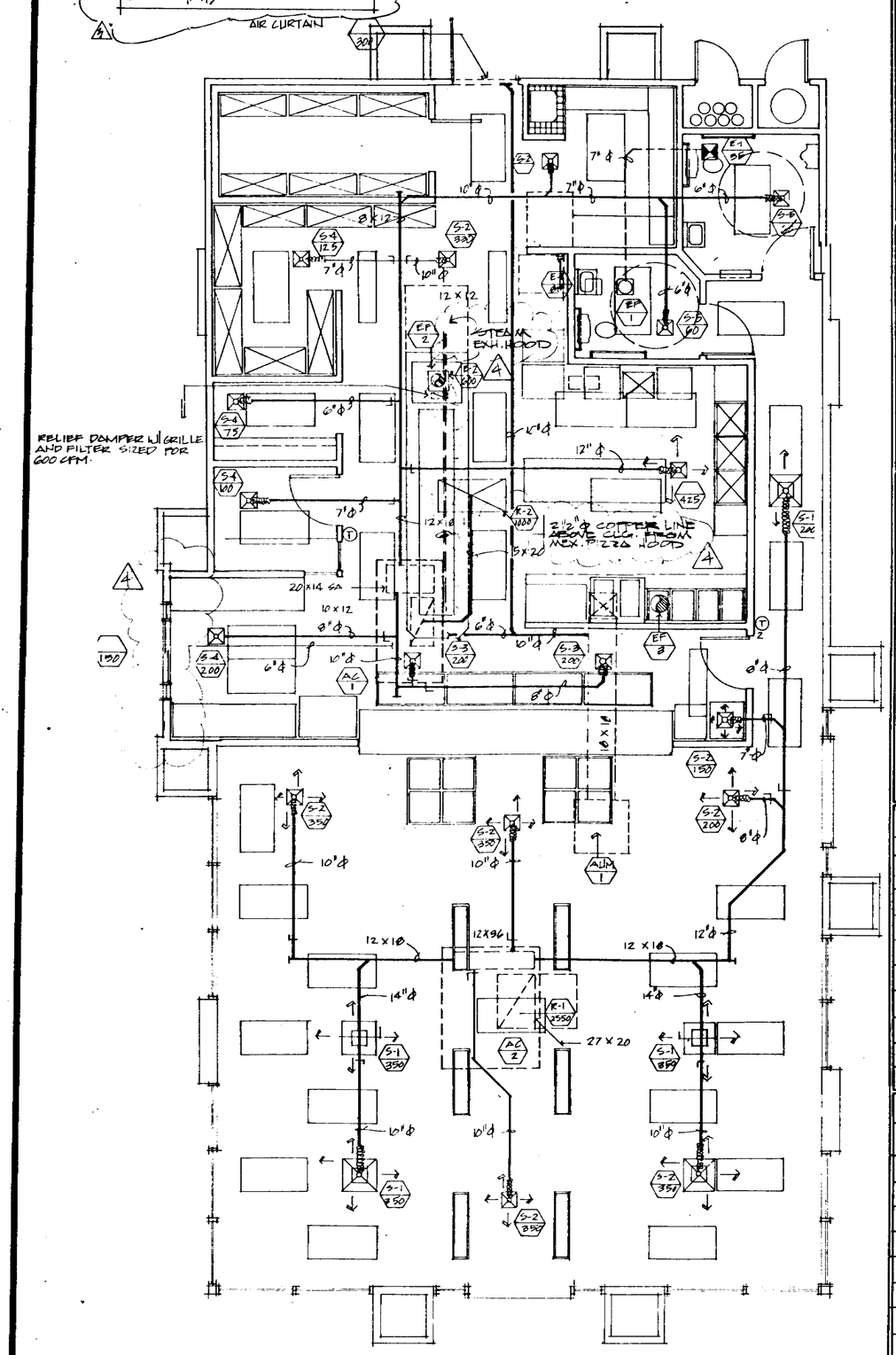

ROOF MTD.HEATING ,VENTILATING & AIRCONDITIONING SCHED.

SYMBOL	LOCATION	MFR.	MODEL	CFM	SP	COOLING BTUH	HEATING CAP INPUT	HEATING CAP OUTPUT	*FILTER NO.	*FILTER SIZE	ELECT. DATA HP	ELECT. DATA VOLTS	ELECT. DATA PH	COPPER	OPER. WT.	REMARKS
AC/1	ROOF	CARRIER	48 LDT 006	2000	½	61000	80000	61600	1	1"	1	208/230 45A.F.	30	7.95	795	INSTALL FULLY MODULATING ECONOMIZER
AC/2	ROOF	CARRIER	48 LDD 008	3000	½	91000	114000	91200	1	1"		208 V. 50A.F.	30	8.2	1121	BAROMETRIC RELIEF DAMPER TYP. (AC/1&2)

EXHAUST FAN & EVAP. COOLER SCHEDULE

SYMBOL	LOCATION	MFR.	SONES	MODEL	S.P.	CFM	ELECTRICAL DATA HP	ELECTRICAL DATA VOLTS	ELECTRICAL DATA PH	OPER. WT.	REMARKS
EF/1	TOILET	PENN	3.2	DOMEX XR82	½	175	1/25	208	1		INTERLOCK WITH AC/1 FAN
EF/2	STEAM HOOD	PENN	5.4	FUMEX FMX/9Q	½	600	1/12	208	1	30	PROVIDE RELIEF DAMPER W/ GRILE & FILTER SIZED FOR 600 CFM
EF/3	KITCHEN HOOD	PENN	9.0	FUMEX FMX/18B	3/4	3600	1½	208	3	118	INTERLOCK W/ MUA & AC/1
MUA/1	KITCHEN HOOD	McGROW EDISON		ARTIC CIRCLE #S430A	3/4	2945	1½	208	1		INTERLOCK W/ HOOD EXH. FAN & AC/1

BRANCH DUCT

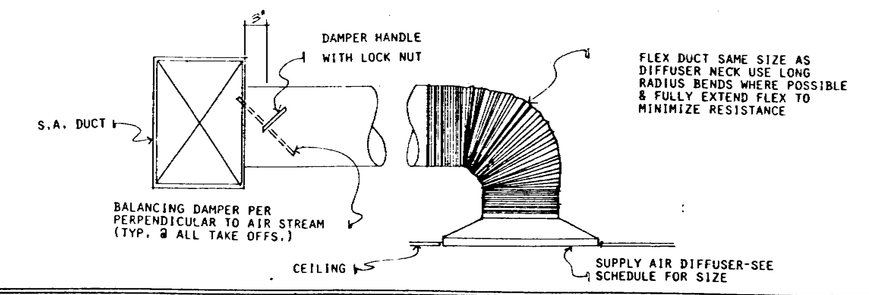

AIR HANDLING EQUIPMENT SCHEDULE

MARK	DESCRIPTION	CFM	TYPE	MT'G.	REMARKS
S-1	TITUS TDC-AA-12x12-3-24x24-4F	350	4 WAY	T-BAR	OFF WHITE
S-2	TITUS TDC-AA-12x12-1-12x12-4F	AS NOTED	4 WAY	FLANGE	FINISH TO
S-3	TITUS TDC-AA-12x12-1-12x12-4F	200	2 WAY	"	ALL SUPPLY
S-4	TITUS (SAME AS S-2)	AS NOTED	AS NOTED	"	AND RETURN
S-5	TITUS TDC 6x6	60	3 WAY	"	DIFFUSER
R-1	TITUS MODEL #50MFR(48x20) W/OBD.	2550	RETURN	"	RETAINING GRILLE
R-2	TITUS MODEL #50 P(36x20)W/OBD.	1000	RETURN	"	RETAINING GRILLE
E-1	TITUS TDC 6x6	AS NOTED		"	TOILET DIFFUSER
E-2	TITUS 48x48	600			STEAM HOOD

AIR BALANCE SYSTEM

MARK	SUPPLY	RETURN	OUTSIDE	EXHAUST	RESULTING PRESSURE
EF/1				175	-175
EF/2				600	-600
EF/3				3600	-3600
MUA/1	2945		2945		+2945
AC/1	2000	1000	1000		+1000
AC/2	3000	2450	550		+550
TOTAL	7945	3450	4495	4375	+120

HVAC (HEATING,VENTILATING AIR CONDITIONING) LEGEND

SUPPLY DIFFUSER - 4 WAY

SUPPLY DIFFUSER - 3 WAY

RETURN AIR GRILL

DEVICE MARK
DIFFUSER/GRILLE/LOUVER SYMBOL
AIR QUANTITY (CFM)

T THERMOSTAT MOUNTED 4'-0" A.F.F. U.O.N.

MAIN DUCT
BRANCH DUCT
VOLUME DAMPER (VD)
FLEXIBLE DUCT

SA SUPPLY AIR
RA RETURN AIR

FIRE SUPPRESSION SYSTEM SCHEMATIC

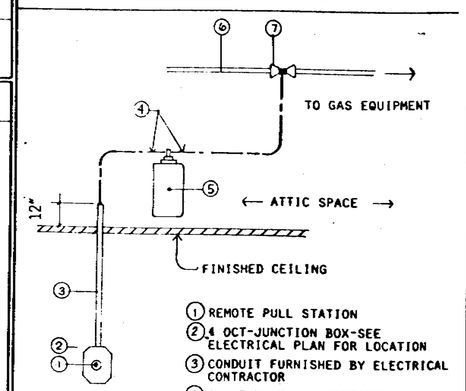

1. REMOTE PULL STATION
2. 4 OCT-JUNCTION BOX-SEE ELECTRICAL PLAN FOR LOCATION
3. CONDUIT FURNISHED BY ELECTRICAL CONTRACTOR
4. CABLE BY FIRE PROTECTION CONTRACTOR
5. EXTINGUISHING TANK-VERIFY LOCATION
6. MAIN GAS SUPPLY
7. MECHANICAL GAS VALVE - FURNISHED BY FIRE PROTECTION CONTRACTOR & INSTALLED BY PLUMBING CONTRACTOR LOCATE ABOVE CEILING (TYP.)

HVAC UNIT GAS CONNECTION

NOTE: GAS CONNECTIONS BY PLUMBING CONTRACTOR.

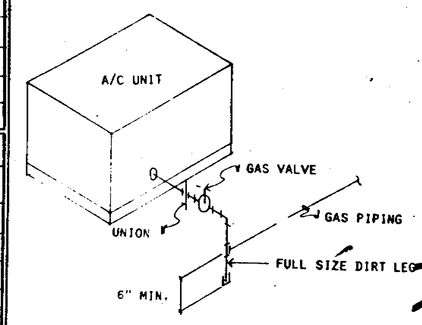

70673-1976

35

HVAC PLAN
HVAC SCHEDULE

REVISIONS	
1 11-17-87	
2 1-19-88	
3 1-19-88	

Backhaus Associates
Architecture - Landscape Architecture - Planning
844 Seventeenth Avenue Santa Cruz, California 95062 408-462-1870

REGISTERED ARCHITECT JOHN V. SUNDBERG C-11058 STATE OF CALIFORNIA

Job Name
TACO BELL
ALUM ROCK AVE.
SAN JOSE, CA

DRAWN
CHECKED
DATE
SCALE
JOB NO.
SHEET M1
OF SHEETS

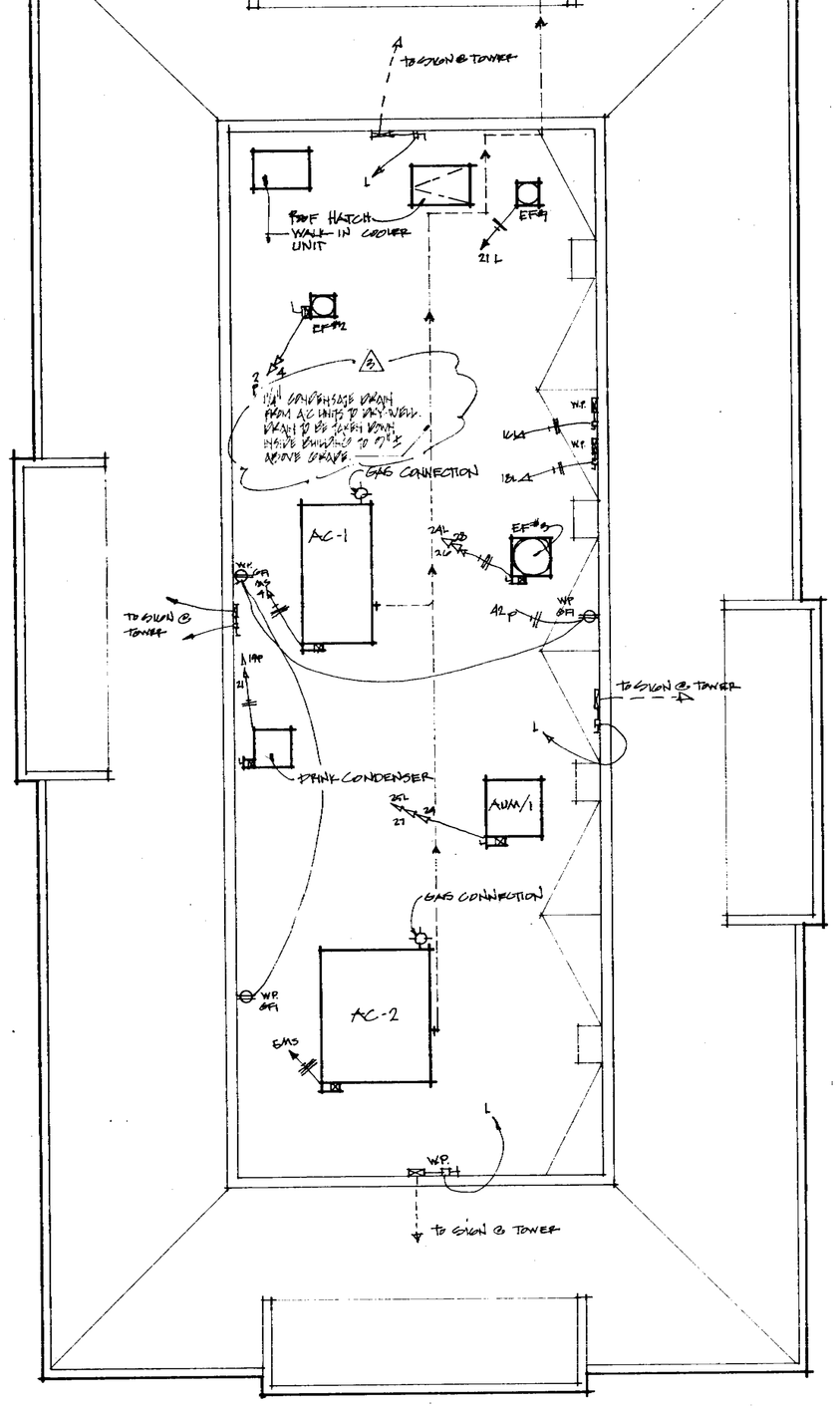

FIXTURE SCHEDULE

MARK	FIXTURE	WATER COLD	WATER HOT	WASTE	FIXTURE AND TRIM DESCRIPTIONS
P-1	UTILITY SINK	1/2"	1/2"	2"	FURNISHED BY KITCHEN SUPPLIER & INSTALLED BY CONTRACTOR (S.S.) N.S.F. APPROVED - REFER TO SHEET A.11, ITEM # 22.
P-2	WATER CLOSET	1"	-	3"	AMER. STD. "MADERA" TOILET" #2221.018 TOP SPUD WATER SAVER W/ SIPHON JET ACTION, ELONGATED BOWL, 1½ INLET SLOAN ROYAL 110-3 CHURCH SEAT 5321.112 OSCILLATING TYPE FLUSH HANDLE W/ MAX 3# OPERATING FORCE
P-3	GREASE TRAP	-	-	4"	1250 GAL. GREASE INTERCEPTOR.
P-4	BAR TYPE HAND SINK	1/2"	1/2"	1 1/2"	15"x15" STAINLESS STEEL SUBMIT TO ARCHITECT FOR APPROVAL - REFER TO SHEET A.11, ITEM # 33.
P-5	FLOOR SINK	-	-	3"	JOSAM #49033 CAST IRON FLOOR SINK, W/ ACID RESISTING PORCELAIN ENAMELED INTERIOR, SE SEDIMENT BUCKET "31", 314 GRATE-4 NON TRAFFIC TOP, 10"x10" SQ. FT. "U".
P-6	FLOOR DRAIN	-	-	3"	JOSAM #32123 CAST IRON FLOOR DRAIN W/ SEDIMENT BUCKET CONTRACTOR TO FURNISH CAST IRON TRAP.
P-7	WATER HEATER	1"	3/4"	-	STATE 'TERBO SAND-BLASTER' SBT 50-65E, 50 GAL. 20" Ø 65000 BTUH INPUT, 4" Ø FLUE RECOVERY 61 GPH @ 100°F 3/4 MPT, 1/2" GAS.
P-8	VEGETABLE SINK	1/2"	1/2"	2"	FURNISHED BY KITCHEN SUPPLIER & INSTALLED BY CONTRACTOR (S.S.) N.S.F. APPROVED - REFER TO SHEET A.11, ITEM #16
P-9	THREE COMPARTMENT SINK	1/2"	1/2"	2"	FURNISHED BY KITCHEN SUPPLIER & INSTALLED BY CONTRACTOR (S.S.) N.S.F. APPROVED - REFER TO SHEET A.11, ITEM #15.
P-10	CAN WASH FLOOR DRAIN	-	-	3"	WADE W-1413 HEAVY DUTY FLOOR DRAIN AT TRASH ENCLOSURE.
P-11	URINAL	3/4"	-	2"	AMERICAN STANDARD 'ALLBROOK' 6540.017 W/ SLOAN ROYAL 180 ES-S EL. 150 MODIFIED 1.5 GAL.
P-12	WALL-HUNG LAVATORY	1/2"	1/2"	1 1/4"	AMERICAN STANDARD #9141.011 W/ HERITAGE CENTER SET LAVATORY FAUCET #2103.620.

GENERAL NOTES:

1. NO VENT PIPES WITHIN X FEET OF ROOF HATCH - REFER TO SHEET A/12 FOR REQUIREMENT.
2. REFER TO SHEET 1/A12 FOR ROOF DRAIN AND OVERFLOW DRAIN LOCATIONS.
3. NO VENT PENETRATIONS THRU TILE ROOF AREAS.

70673-1976

36

HVAC ROOF PLAN AND FIXTURE SCHEDULE

REVISIONS	BY
2 11-17-87	
3 1-17-88	

Backhaus Associates
Architecture - Landscape Architecture - Planning
644 Seventeenth Avenue Santa Cruz, California 95062 408-462-1870

REGISTERED ARCHITECT MARK V. SUNDBERG C-11050 JAN 26 1988 STATE OF CALIFORNIA

Job Name:
TACO BELL
ALUM ROCK AVE.

DRAWN CFB.
CHECKED MVS.
DATE
SCALE 1/4"=1'-0"
JOB NO.
SHEET M2
OF SHEE

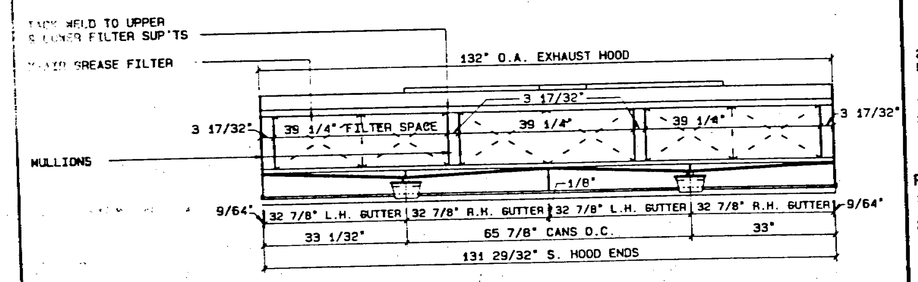

HOOD LONGITUDINAL SECTION — NO SCALE — 4

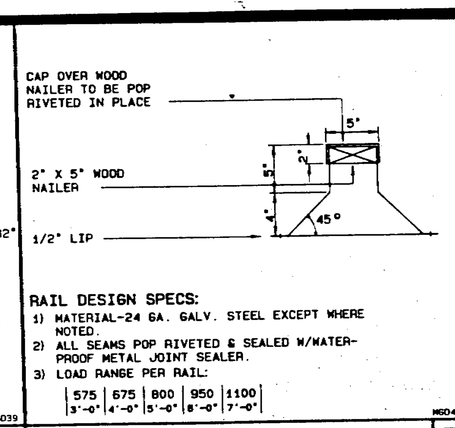

SECTION THRU RF. RAIL (TYP.) — 3

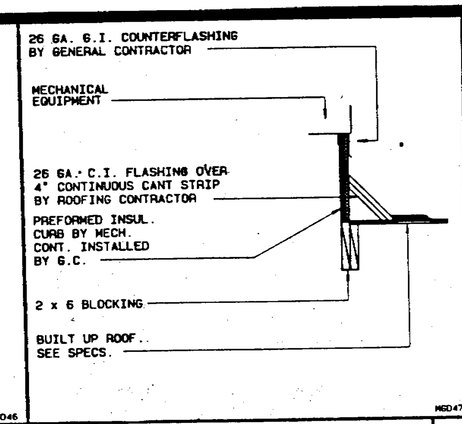

MECH. UNIT ROOF CURB — 2

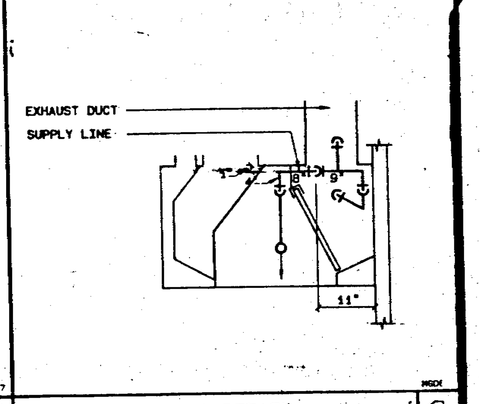

FIRE SYSTEM HOOD DETAIL — 1

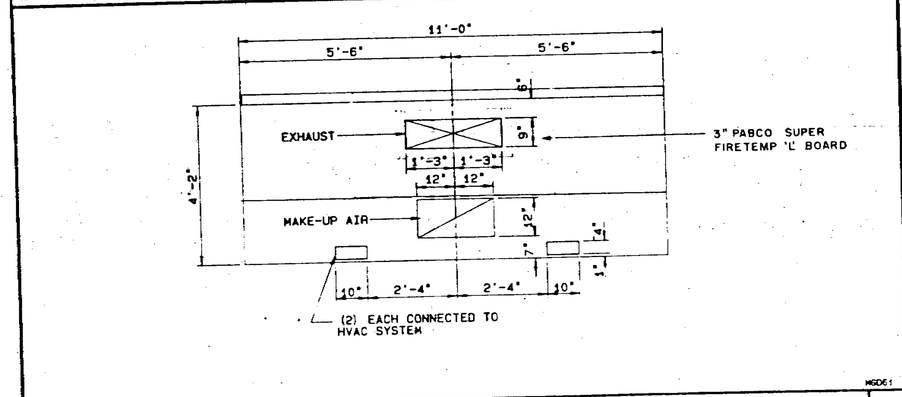

HOOD PLAN VIEW — 1/2" = 1'-0" — 7

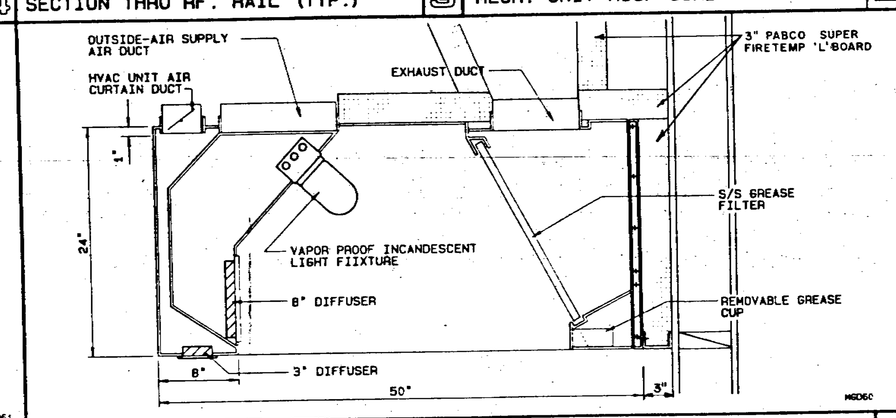

HOOD CROSS SECTION ≈ 30,472 @ 16ga. = .0598 — 1 1/2" = 1'-0" — 6

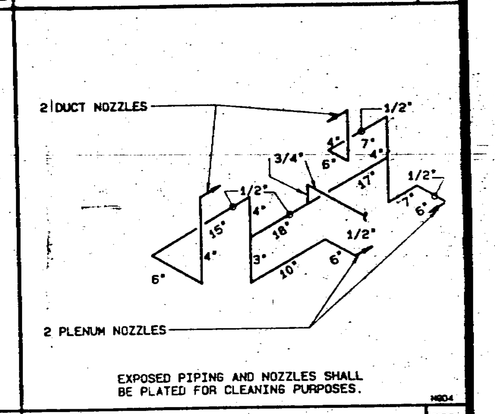

FIRE EXTINGUISHING SYSTEM — 5

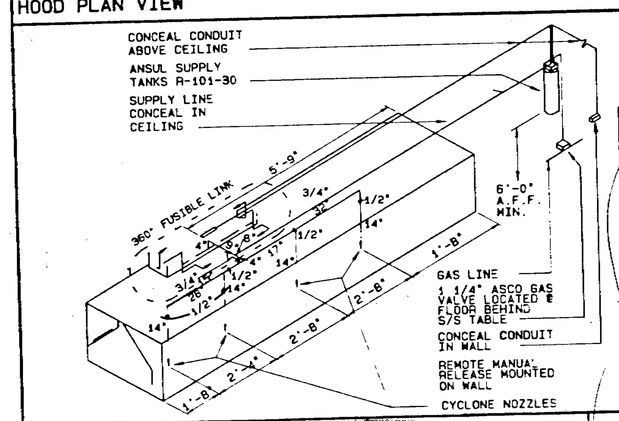

FIRE EXTINGUISHER SYSTEM — 12

NOTE:
ALL EXPOSED PIPING INSTALLED IN FIELD FOR FIRE SUPRESSION SYSTEM TO BE CHROME PLATED

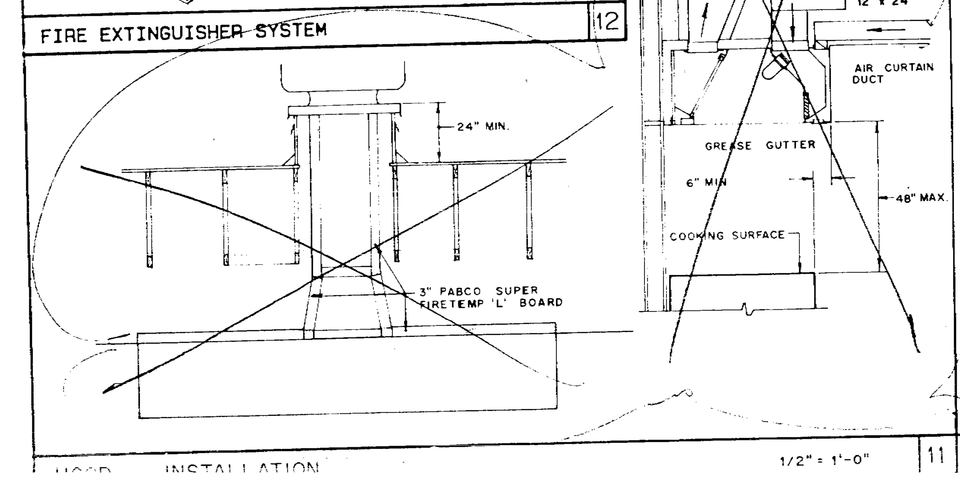

HOOD INSTALLATION — 1/2" = 1'-0" — 11

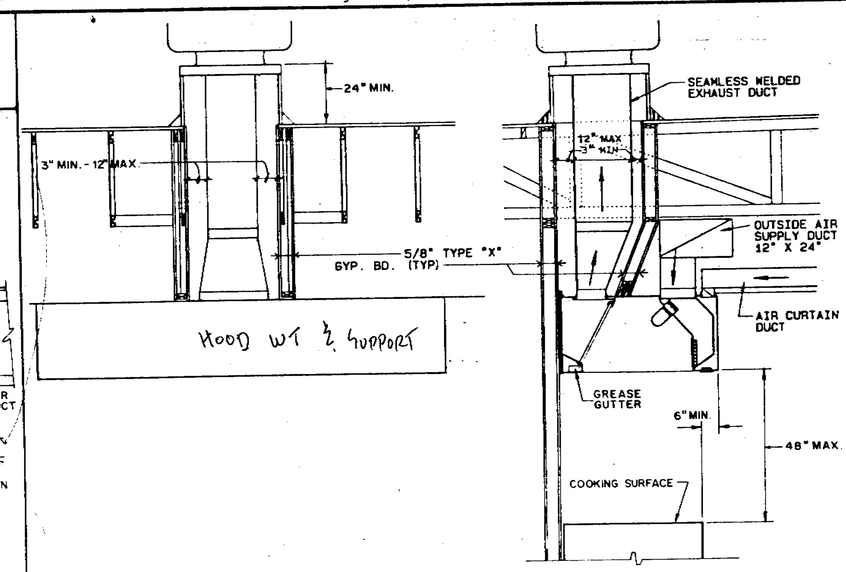

HOOD INSTALLATION — 1/2" = 1'-0" — 10

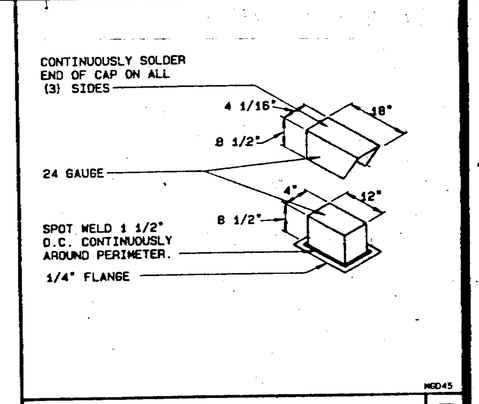

REFRIGERANT LINE TO PITCH PAN — 8

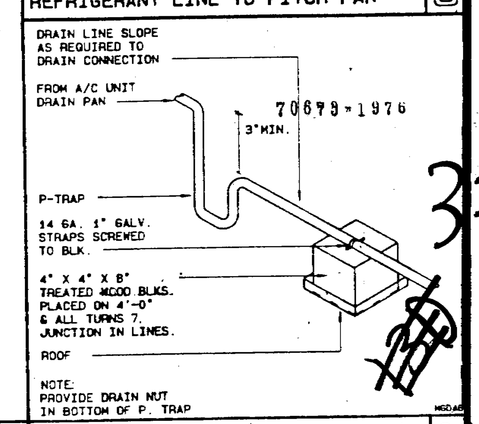

CONDENSATE DRAIN SUPPORT — 9

REVISIONS	BY
12-2-87	HS

backhaus Associates
Architecture - Landscape Architecture - Planning
844 Seventeenth Avenue, Santa Cruz, California 95062 408-462-1970

REGISTERED ARCHITECT
GARY V. SUNDBERG
C 11038
STATE OF CALIFORNIA

TACO BELL
ALUM ROCK AVE.
SAN JOSE, CA.

DRAWN	
CHECKED	
DATE	
SCALE	
JOB NO.	
SHEET	M-3
OF	SHEETS

37

Certificate of Compliance (Part 1 of 2)

CF-1

Project Title: TACO BELL ALUM ROCK

Project Architect/Engineer: MARK SUNDBERG — Building Permit Number: ALUM ROCK CA. SAN JOSE

Project Location: SAN JOSE CA — Climate Zone

City/Town

Documentation Author: LANCE BARKER — Date: 11.20.87

For Enforcement Agency Use Only

Plan Checked By — Date

Signature and Registration Stamp — Field Checked By — Date — Approved By — Date

Prescriptive Approach/Performance Approach Strategy

General

1 CEC Occupancy Type . . . . . OFF
2 UBC Occupancy Group/Division B2
3 Package Selected 7576 ft2
4 Gross Conditioned Floor Area 7576 ft2

Roof and Floors

5 Proposed Roof/Ceiling R_t (CF-2, CF-3) . . . 24HB hr-F-ft2/Btu
6 Required Roof/Ceiling R_t (CF-2) 10 hr-F-ft2/Btu
7 Proposed Exterior Floor R_t (CF-2, CF-3) . . NA hr-F-ft2/Btu
8 Required Exterior Floor R_t (CF-2) . . . . . NA hr-F-ft2/Btu

Walls

9 Proposed Opaque Wall R_t (CF-2, CF-3) . . ____ hr-F-ft2/Btu
10 Wall Heat Capacity (CF3) . . . . . ____ Btu/F-ft2
11 Required Opaque Wall h_q (CF-2) . . . . . ____ hr-F-ft2/Btu

Glazing in Walls

12 Exterior Wall Area (CF-2) . . . . . ____ ft2
13 Total Glazing Area (CF-2) . . . . . ____ ft2
14 Proposed Total Percent (Line 13 / Line 12) . ____ %
15 Average Total SC (CF-2) . . . . . ____
16 Allowed Total Glazing Percent . . . . . ____ %
17 West Exterior Wall Area (CF-2) . . . . . ____ ft2
18 West Glazing Area (CF-2) . . . . . ____ ft2
19 Proposed West Percent (CF-2) . . . . . ____ %
20 Average West SC (CF-2) . . . . . ____
21 Allowed West Glazing Percent . . . . . ____ %

Glazing in Roof (CF-6) — Proposed — Allowed

22 Skylight 1 . . . . . ____ ____ ft2
23 Skylight 2 . . . . . ____ ____ ft2
24 Skylight 3 . . . . . ____ ____ ft2
25 Skylight 4 . . . . . ____ ____ ft2
26 Skylight 5 . . . . . ____ ____ ft2
27 Skylight 6 . . . . . ____ ____ ft2
28 Skylight 7 . . . . . ____ ____ ft2
29 Skylight 8 . . . . . ____ ____ ft2

Lighting

30 Proposed Adjusted LPD (CF-5) . . . . . ____ Watts/ft2
31 Allowed LPD (CF-5) . . . . . ____ Watts/ft2

HVAC

32 Performance Set Selected . . . . . ____
33 Proposed Fan Wattage Index (CF-4) . . . ____ Watts/ft2
34 Allowed Fan Wattage Index . . . . . ____ Watts/ft2
35 Proposed Cooling Power Index (CF-4) . . ____ Btu/hft2
36 Allowed Cooling Power Index . . . . . ____ Btu/hft2
37 Proposed Heating Power Index (CF-4) . . ____ Btu/hft2
38 Allowed Heating Power Index . . . . . ____ Btu/hft2

Form Revised September 1986

Performance Approach

Energy Budget

1 CEC Occupancy Type . . . . . ____
2 UBC Occupancy Group/Division . . . . . ____
3 Conditioned Floor Area . . . . . ____ ft2
4 Budget Table . . . . . ____
5 Allowed Energy Budget (WS-1A) . . . . . ____ kBtu/yr-ft2

Calculated Annual Energy Consumption

6 Approved Calculation Method . . . . . ____
7 CEC Designation . . . . . ____
8 Multiplier . . . . . ____

Estimated Energy Use

9 Heating . . . . . ____ kBtu/yr-ft2
10 Cooling . . . . . ____ kBtu/yr-ft2
11 Fans . . . . . ____ kBtu/yr-ft2
12 Lights . . . . . ____ kBtu/yr-ft2
13 Miscellaneous Equipment . . . . . ____ kBtu/yr-ft2
14 Total . . . . . ____ kBtu/yr-ft2
15 Adj. Total Energy Use (line 8 x line 14) . . ____ kBtu/yr-ft2

Compliance Statement

General. The proposed building represented in this set of compliance documentation is consistent with the other compliance forms and worksheets, with the plans and specifications and with any other calculations or computer runs submitted with this permit application.

Performance Approach. (when applicable) The energy performance estimate presented on this form was calculated using the approved calculation method indicated above and with the CEC established fixed and restricted engineering inputs for the applicable climate zone and occupancy type.

Prescriptive Approach. (when applicable) The proposed building has been designed to meet the requirements of the Alternative Component Package indicated above for the appropriate occupancy type and climate zone.

Signed

Name/Title: MARK SUNDBERG / ARCHITECT

Company: BACKHAUS ASSOC.

Address: 344 17th AVE

City/State/Zip: SANTA CRUZ CA 95062

Telephone: 408-462-1870 — Calif. License Number: C-11038

Page ____ of ____

Certificate of Compliance (Part 2 of 2)

CF-1

Project Title: TACO BELL - ALUM ROCK CO.

Documentation Author/Firm: MARK SUNDBERG / BACKHAUS — Date: LANCE BARKER AEC DESIGN

For Enforcement Agency Use Only

Checked By — Date

Both parts one and two of this Certificate of Compliance must be included with each building permit application for the above noted building and appear on the plans submitted for approval. The building features and requirements represented on the Certificate of Compliance are adequate to achieve compliance with the second generation nonresidential energy standards for the building referenced above. The building features and requirements are also adequate for any subsequent alterations, modifications or additions to the building.

Designer One

Name (Print): MARK V SUNDBERG

Title/Company Name: BACKHAUS ASSOCIATES

Address: 344 17th AVE SANTA CRUZ CA

Signature — Date: 11.20.87

Enforcement Agency Signature — Date

Designer Two

Name (Print): LANCE BARKER

Title/Company Name: AEC DESIGN

Address: 1334 OAKLEM, #8 SEBASTOPOL CA

Signature — Date: 11.20.87

Enforcement Agency Signature — Date

Owner

Name (Print): CARL LACSON

Title/Company Name: TACO BELL INC.

Address

Signature — Date

Designer Three

Name (Print)

Title/Company Name

Address

Signature — Date

Enforcement Agency Signature — Date

Designer Four

Name (Print)

Title/Company Name

Address

Signature — Date

Enforcement Agency Signature — Date

Enforcement Agency

Name (Print)

Title/Agency

Address

Form Revised September 1986

Page ____ of ____

Mandatory Measures Checklist

MF-1

Project Title: TACO BELL - ALUM ROCK CO.

Documentation Author/Firm: MARK SUNDBERG / BACKHAUS — Date: LANCE BARKER AEC DESIGN

For Enforcement Agency Use Only

Checked By — Date

Reference in Construction Documents

Envelope Measures

[ ] Certified insulation materials per 2-5311(a) A1/A8
[ ] Insulation installed to meet flame spread and smoke density requirements of 2-5311(b) A1/A8
[ ] Urea formaldehyde foam insulation is installed per 2-5311(d) . . . . . NA
[ ] Retrofit insulation specified as per 2-5313 . . . . . NA
[ ] Air infiltration is minimized by specification of tested manufactured doors and windows and proper sealing and weatherstripping as per 2-5317 . . . . . A10

Lighting System Measures

[ ] Certified luminaires/ballasts per 2-5314(b) E1
[ ] Independent control w/ enclosed areas per 2-5319(a) . . E1
[ ] Manual switching readily accessible per 2-5319(b) . . . E1
[ ] Reduction of lighting load to at least one half per 2-5319(c). Occupancy sensors or programmable timers meeting CEC criteria may substitute E1
[ ] Separate switching of daylit areas per 2-5319(d) E1
[ ] Separate switching of display and valance lighting in retail and wholesale stores per 2-5319(h) E1
[ ] Automatic control of display lighting in retail and wholesale stores per 2-5319(h) . . . . . NA
[ ] Tandem wiring of one- and three-lamp luminaires per 2-5319(i) . . . . . NA

Daylighting and Lumen Maintenance Controls (when applicable)

[ ] Uniformly illumination reduction to one-half per 2-5319(e)1 . . . . . ____
[ ] Flicker free operation and no premature lamp failure per 2-5319(e)2 . . . . . ____
[ ] Time delays to prevent undesirable cycling per 2-5319(e)3 . . . . . ____
[ ] Step switching devices with separation between on/off settings per 2-5319(e)4 . . . . . ____
[ ] Photocell sensors with a diffusing cover and no opaque cover per 2-5319(e)5 . . . . . ____
[ ] Manufacturer's instructions provided for installation and calibration per 2-5319(e)6 . . . . . ____
[ ] Proper installation of controls including sensor location, certification of initial calibration and control of luminaires only within daylit area per 2-5319(e)8 . . . . . ____
[ ] Visible or audible malfunction alarms per 2-5319(g) . . . ____

Occupancy Sensing Devices (when applicable)

[ ] Flicker free operation and no premature lamp failure per 2-5319(e)2 . . . . . ____
[ ] Time delays to prevent undesirable cycling per 2-5319(e)3 . . . . . ____
[ ] Visible or audible malfunction alarms per 2-5319(g) . . . ____
[ ] Limits on emissions per exceptions to 2-5319(e) . . . . ____

HVAC and Plumbing System Measures

[ ] Piping insulated as required by 2-5312 . . . . . M3-F
[ ] Certified HVAC equipment per 2-5314(a) M3-F
[ ] Certified plumbing equipment per 2-5314(a) P1
[ ] Heating and cooling equipment efficiency per 2-5314(b) . . M1
[ ] Pilotless ignition of gas appliances per 2-5314(c) M3-F
[ ] Automatic controls for off-hours per 2-5315(a)1 . . . . . M1-F
[ ] Thermostat set point requirements per 2-5315(a) M1
[ ] Sequential control of heating and cooling per 2-5315(a)3 . M1
[ ] Automatic exhaust fan dampers per 2-5316(b) M1
[ ] Thermostat controls for each zone per 2-5315(b) M3
[ ] Ventilation provided per 2-5316 and 2-5343 . . . . . M3
[ ] Heaters for domestic hot water and/or pools per 2-5318 . NA

Form Revised September 1986

Page ____ of ____

70573-1976

38

REVISIONS	BY

Backhaus Associates
Architecture – Landscape Architecture – Planning
844 Seventeenth Avenue Santa Cruz, California 95062 408-462-1870

MARK V. SUNDBERG — C-11038 — JAN 26 1988

Job Name:
TACO BELL
ALUM ROCK @ CAPITOL AVE
SAN JOSE, CA

DRAWN	
CHECKED	
DATE	
SCALE	
JOB NO.	
SHEET	EC-1
OF	SHEETS

ALUM ROCK SQUARE

ALUM ROCK AVENUE AT CAPITOL AVENUE
SAN JOSE, CALIFORNIA

BEST AVAILABLE

70673-1976

39

FINAL PERMIT
PLANNING DEPARTMENT
CP86-7-49

REVISIONS	BY

Backhaus Associates
Architecture - Landscape Architecture - Planning
944 Seventeenth Avenue Santa Cruz, California 95062 408-462-1870

Job Name:
ALUM ROCK SQUARE
ALUM ROCK @ CAPITOL AVE
SAN JOSE, CA

DRAWN	
CHECKED	
DATE	
SCALE	
JOB NO.	
SHEET	1
OF	SHEETS

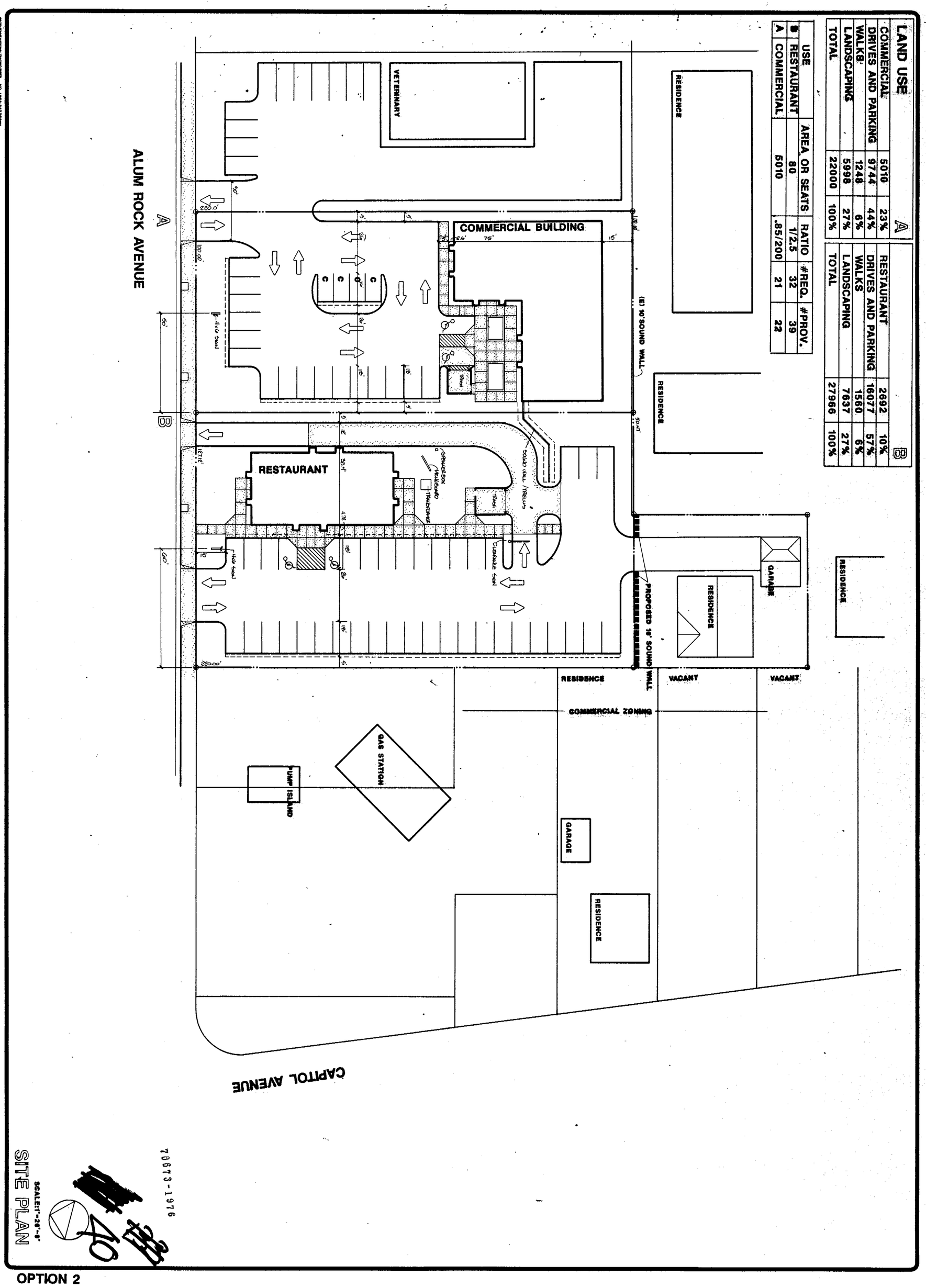

LAND USE		A
COMMERCIAL	5010	23%
DRIVES AND PARKING	9744	44%
WALKS	1248	6%
LANDSCAPING	5998	27%
TOTAL	22000	100%

		B
RESTAURANT	2692	10%
DRIVES AND PARKING	16077	57%
WALKS	1560	6%
LANDSCAPING	7637	27%
TOTAL	27966	100%

USE	AREA OR SEATS	RATIO	#REQ.	#PROV.
B RESTAURANT	80	1/2.5	32	39
A COMMERCIAL	5010	.85/200	21	22

70673-1976

SITE PLAN

SCALE: 1"=20'-0"

OPTION 2

DRAWN	D.S.B.
CHECKED	
DATE	3-12-87
SCALE	1"=20'-0"
JOB NO.	
SHEET	2
OF	
SHEETS	

Job Name:
ALUM ROCK SQUARE
ALUM ROCK @ CAPITOL AVE
SAN JOSE, CA

Backhaus Associates
Architecture - Landscape Architecture - Planning
844 Seventeenth Avenue Santa Cruz, California 95062 408-462-1870

REVISIONS	BY
4-1-87	DB
4-2-87	DB
Standard 4/10/87	D.B.

LAND USE		A
COMMERCIAL	5010	23%
DRIVES AND PARKING	9744	44%
WALKS	1248	6%
LANDSCAPING	5998	27%
TOTAL	22000	100%

		B
RESTAURANT	2692	10%
DRIVES AND PARKING	16077	57%
WALKS	1560	6%
LANDSCAPING	7637	27%
TOTAL	27966	100%

	USE	AREA OR SEATS	RATIO	#REQ.	#PROV.
B	RESTAURANT	80	1/2.5	32	39
A	COMMERCIAL	5010	.85/200	21	27

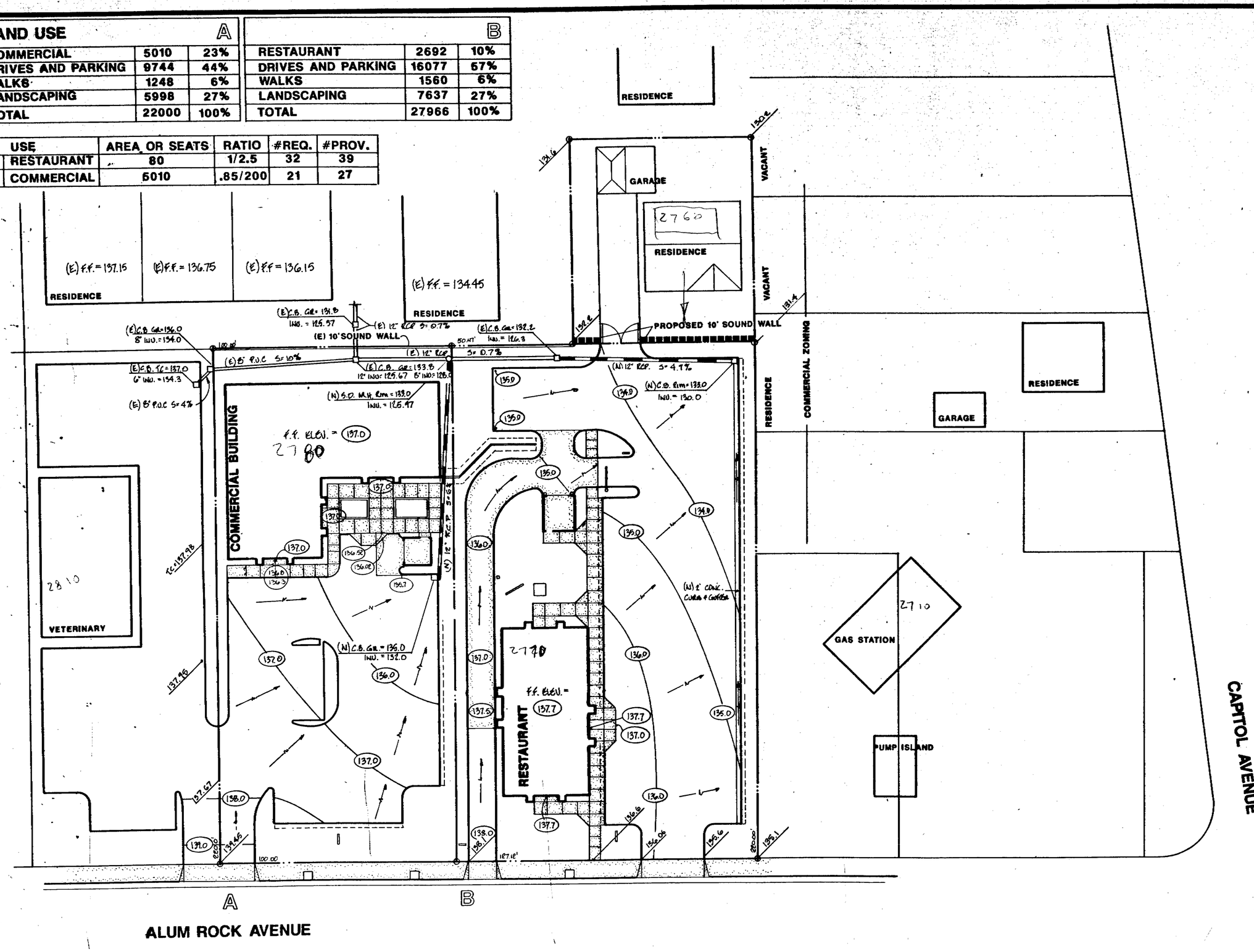

70673-1976

41

SCALE: 1"=20'-0"

GRADING PLAN

OPTION 2

REVISIONS	BY
3/19/87	D.B.
4-6-87	D.B.
4/10/87	D.B.

Backhaus Associates
Architecture - Landscape Architecture - Planning
844 Seventeenth Avenue Santa Cruz, California 95062 408-462-1970

Job Name:
ALUM ROCK SQUARE
ALUM ROCK @ CAPITOL AVE
SAN JOSE, CA

DRAWN	D.S.B.
CHECKED	M.D.B.
DATE	3-12-87
SCALE	1"=20'-0"
JOB NO.	
SHEET	3
OF	SHEETS

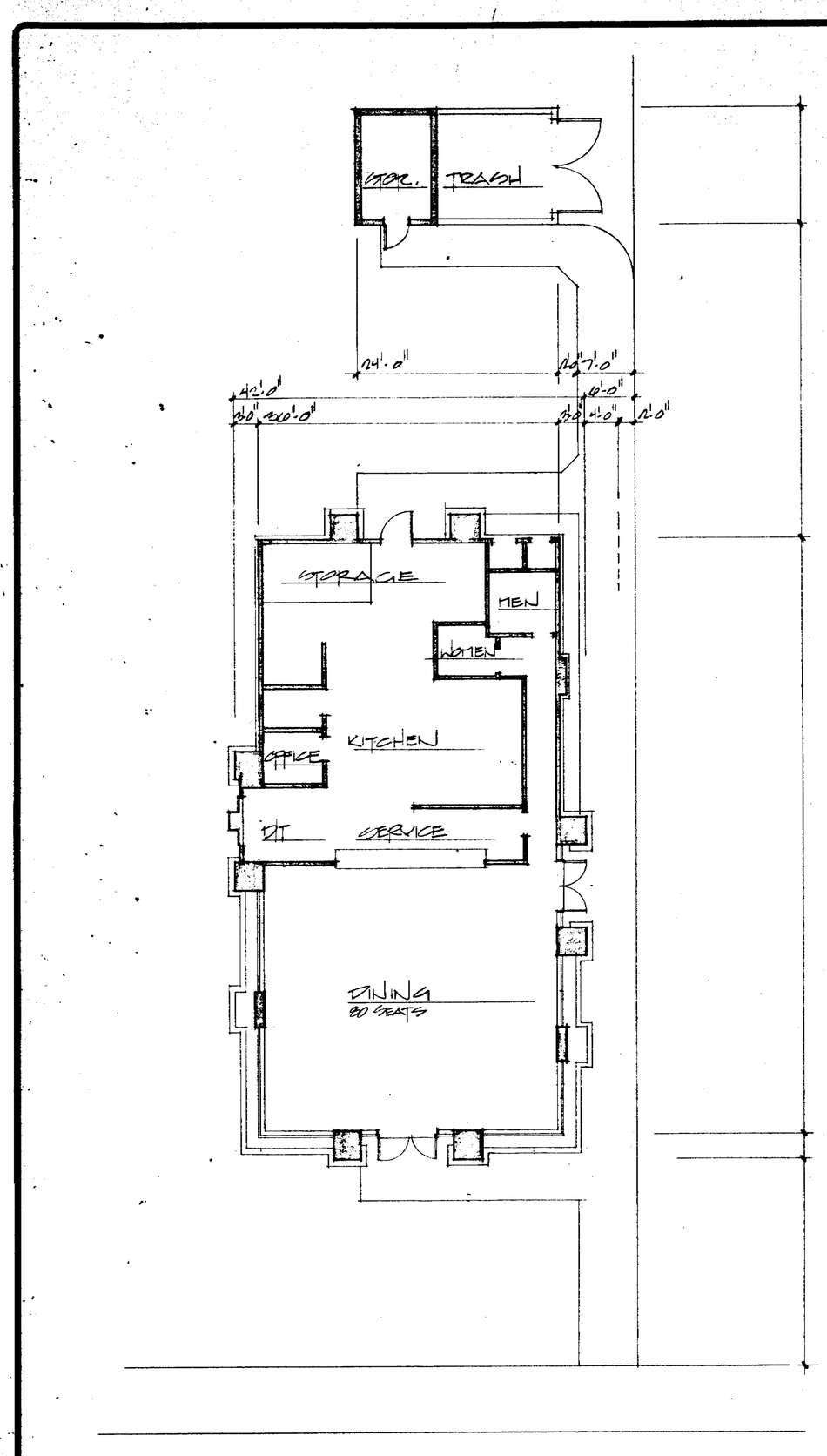

FLOOR PLAN – RESTAURANT GROSS FLOOR AREA 1609 SF
1/8" = 1'-0" DINING AREA 1120 SF

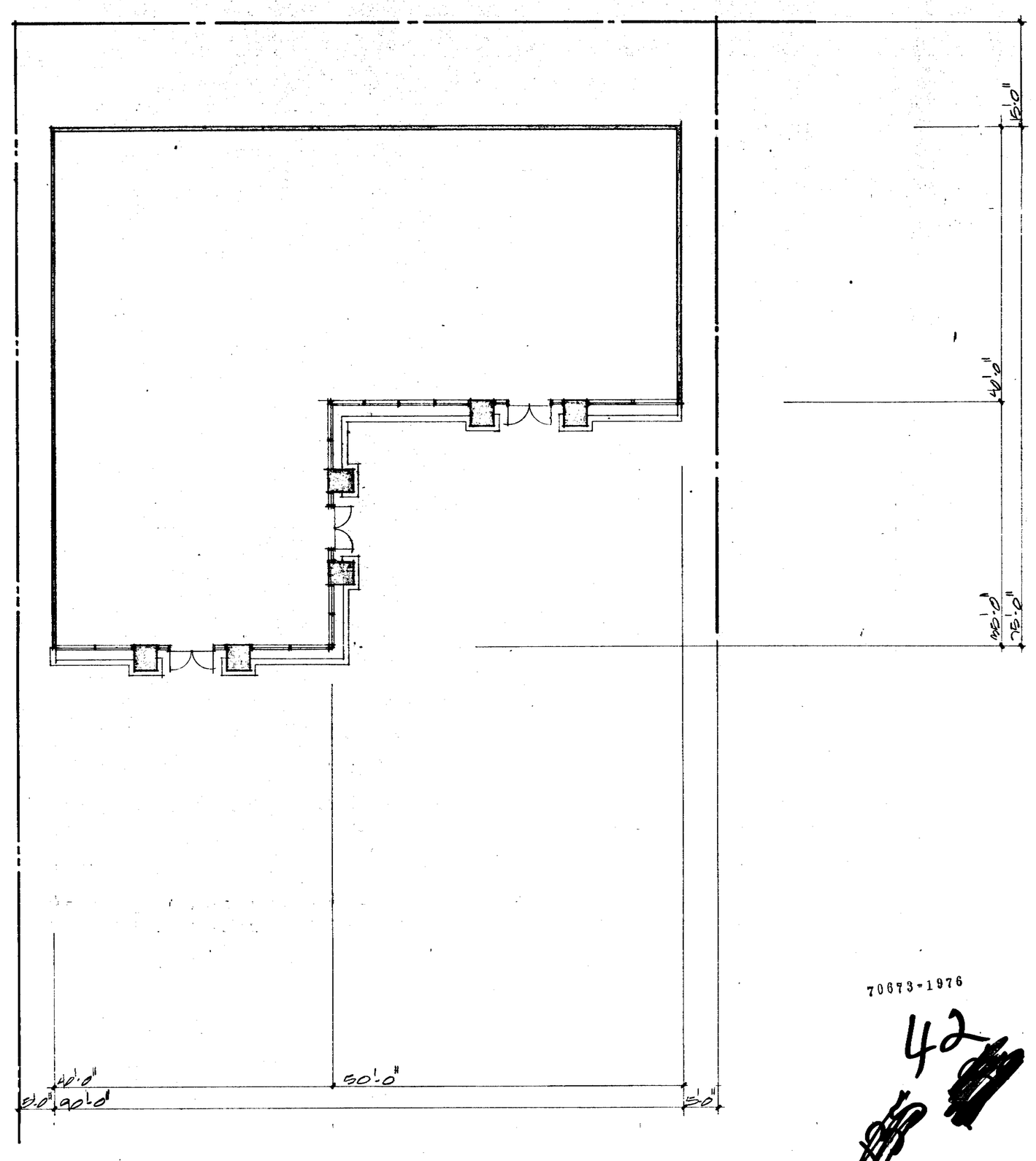

FLOOR PLAN – COMMERCIAL BUILDING GROSS BUILDING AREA 5000 SF
1/8" = 1'-0" NET (65%) BUILDING AREA 4280 SF

70673-1976

42

REVISIONS	BY

Backhaus Associates
Architecture – Landscape Architecture – Planning
944 Seventeenth Avenue Santa Cruz, California 95062 408-462-1970

Job Name:
ALUM ROCK SQUARE
ALUM ROCK @ CAPITOL AVE
SAN JOSE, CA

DRAWN	
CHECKED	
DATE	
SCALE	
JOB NO.	
SHEET	4
OF	SHEETS

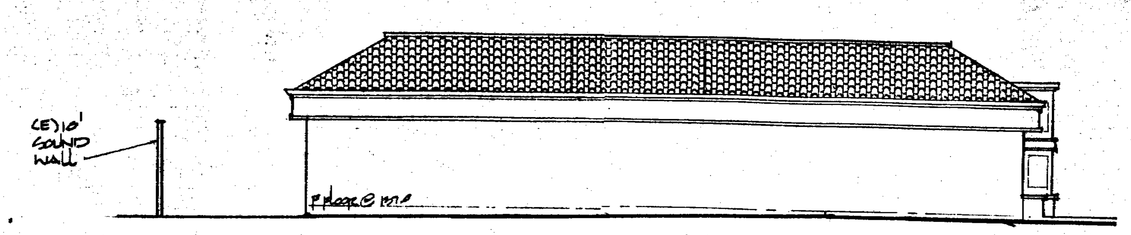

NORTHEAST

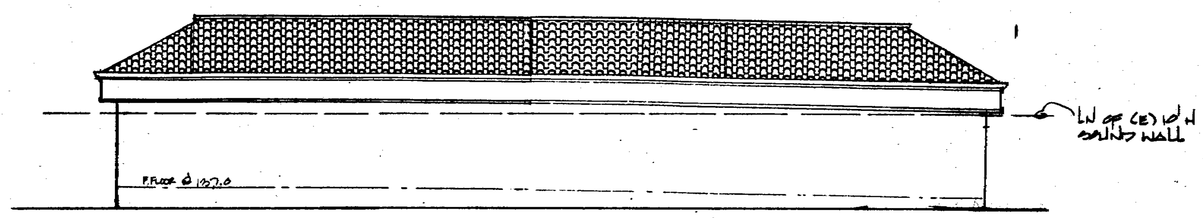

SOUTHEAST

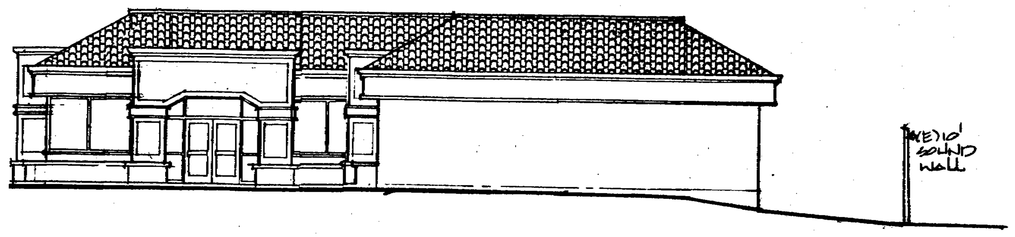

SOUTHWEST

70673-1976

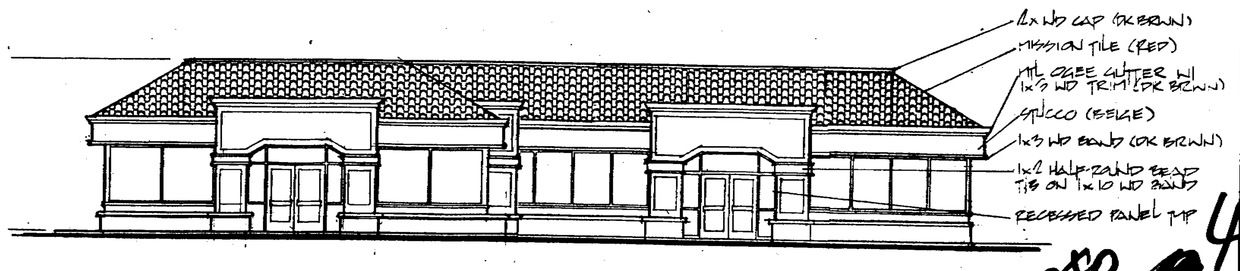

NORTHWEST

43

REVISIONS	BY

Backhaus Associates
Architecture - Landscape Architecture - Planning
554 Seventeenth Avenue Santa Cruz, California 95062 408-462-1870

Job Name:
ALUM ROCK SQUARE
ALUM ROCK @ CAPITOL AVE
SAN JOSE, CA

DRAWN	
CHECKED	
DATE	
SCALE	
JOB NO.	
SHEET	5
OF	SHEETS

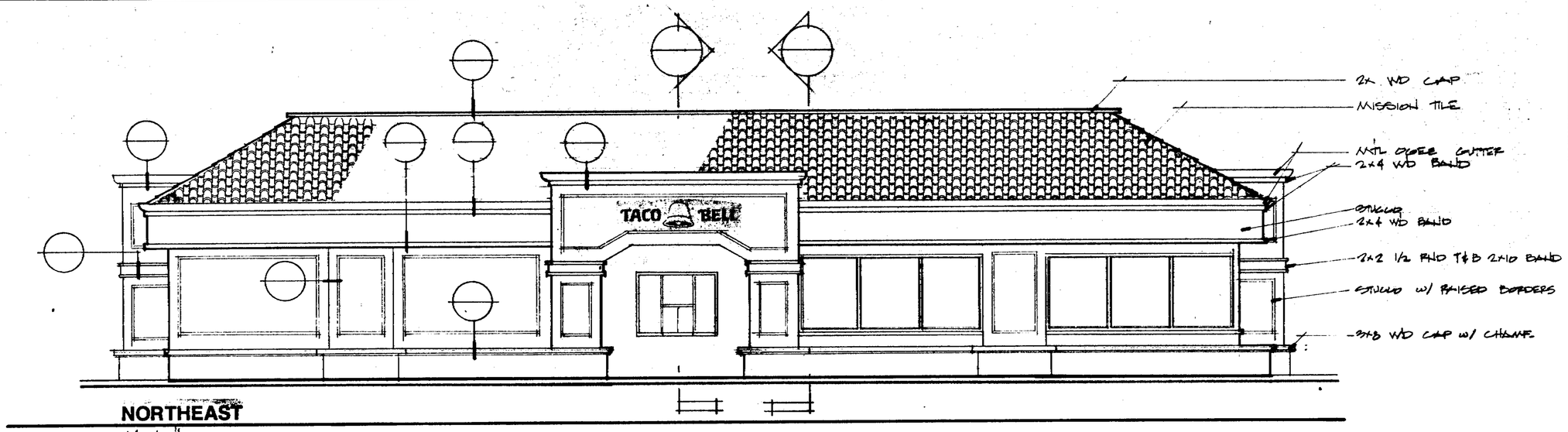

NORTHEAST

1/4" = 1'-0"

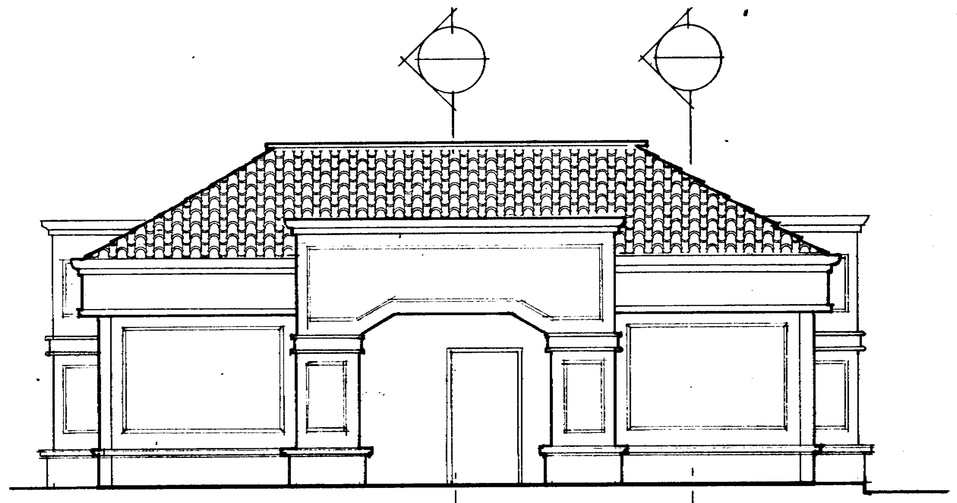

SOUTHEAST

1/4" = 1'-0"

NORTHWEST

1/4" = 1'-0"

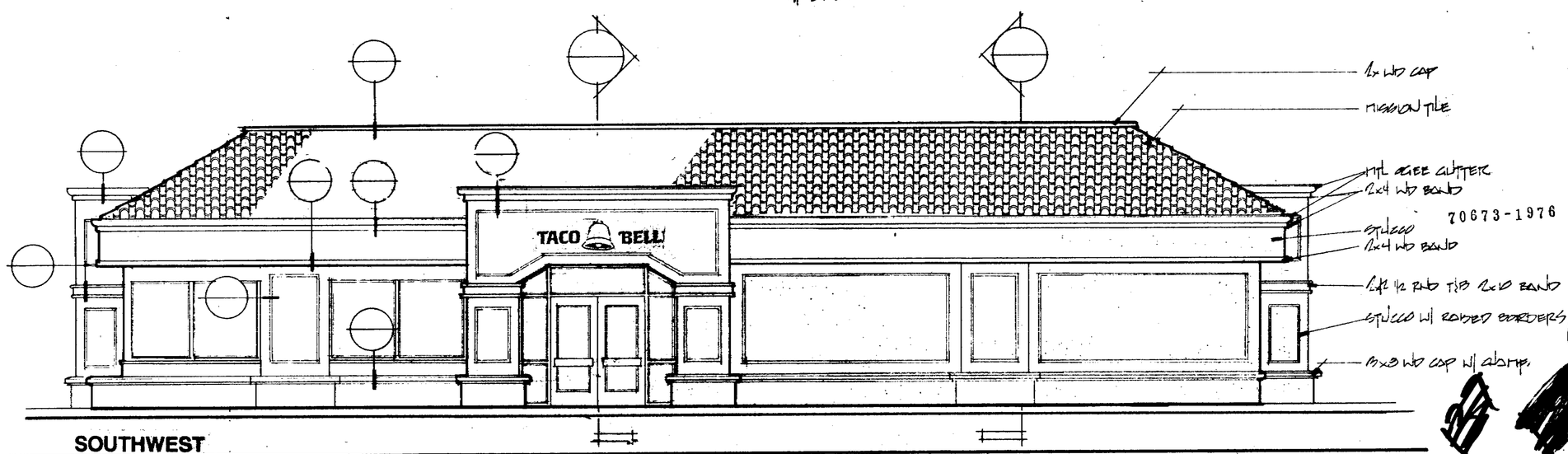

70673-1976

SOUTHWEST

1/4" = 1'-0"

44

REVISIONS	BY

Backhaus Associates
Architecture - Landscape Architecture - Planning
844 Seventeenth Avenue Santa Cruz, California 95062 408-462-1970

Job Name:
ALUM ROCK SQUARE
ALUM ROCK @ CAPITOL AVE
SAN JOSE, CA

DRAWN	
CHECKED	
DATE	
SCALE	
JOB NO.	
SHEET	6
OF	SHEETS

TELEDYNE NATIONAL TRACING PAPER NO. 186A-64X36

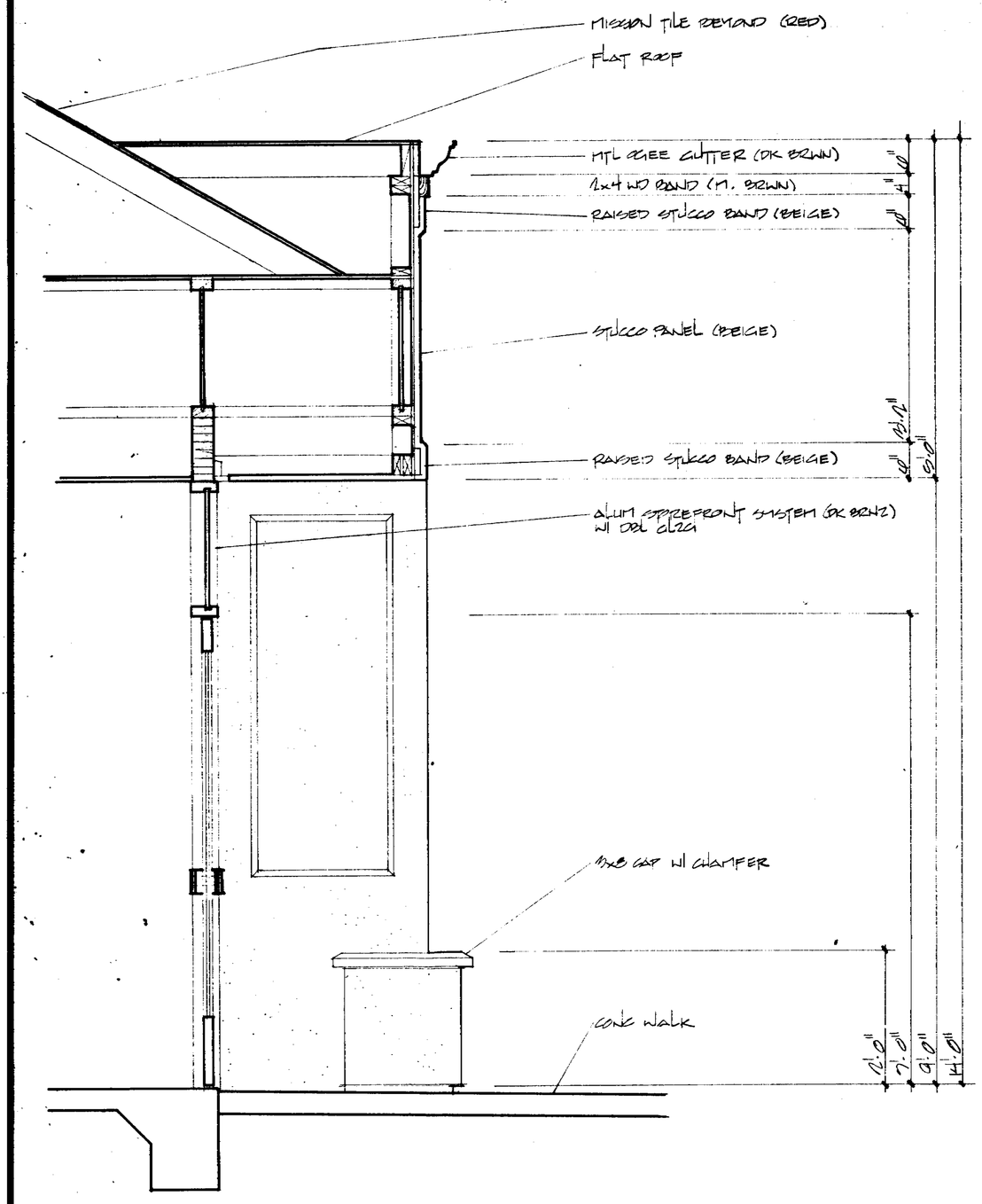

SECTION AT ENTRY ELEMENT

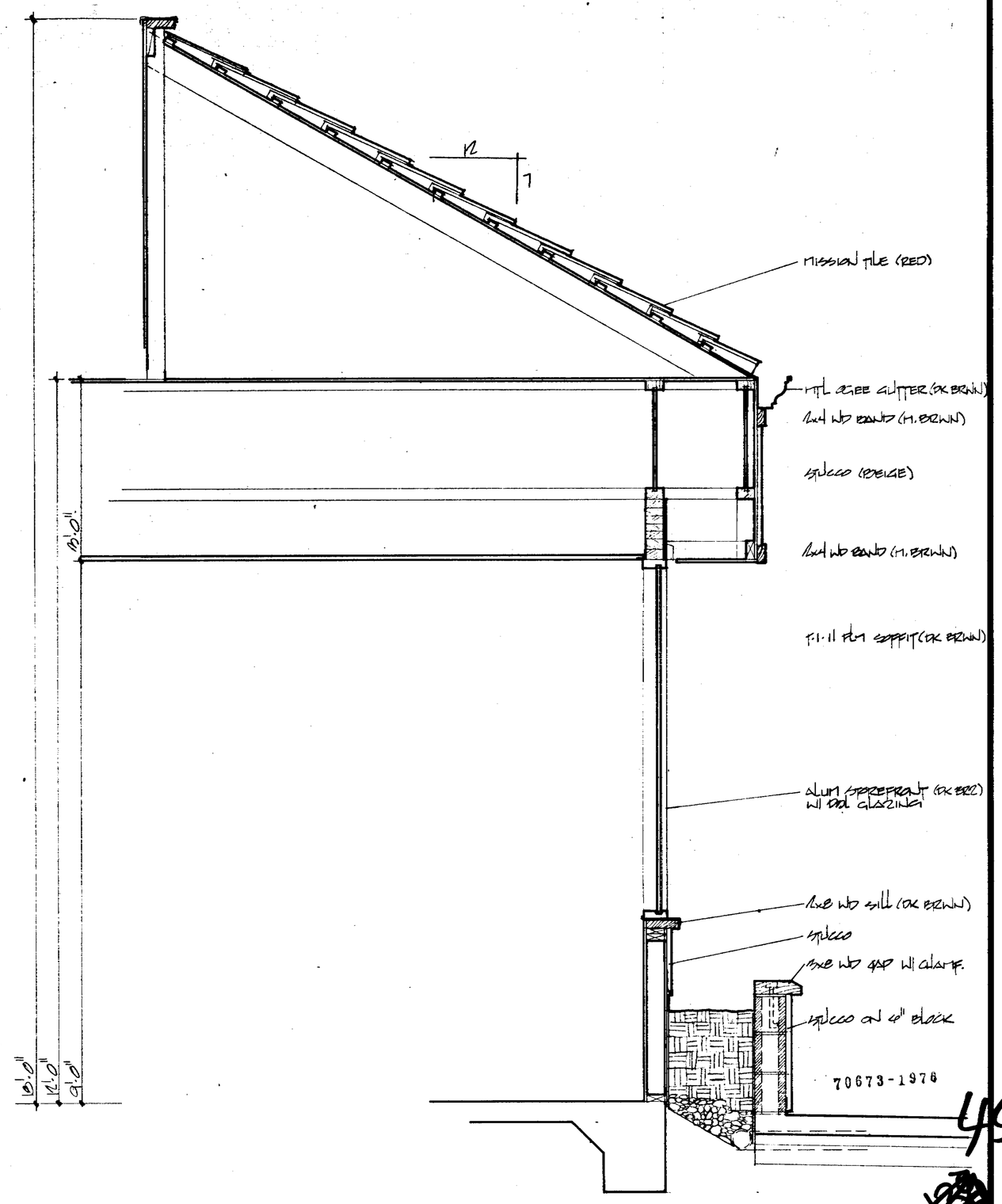

TYPICAL WALL SECTION

REVISIONS	BY

Backhaus Associates
Architecture - Landscape Architecture - Planning
844 Seventeenth Avenue Santa Cruz, California 95062 408-462-1970

Job Name:
ALUM ROCK SQUARE
ALUM ROCK @ CAPITOL AVE
SAN JOSE, CA

DRAWN	
CHECKED	
DATE	
SCALE	
JOB NO.	
SHEET	7
OF	SHEETS

45

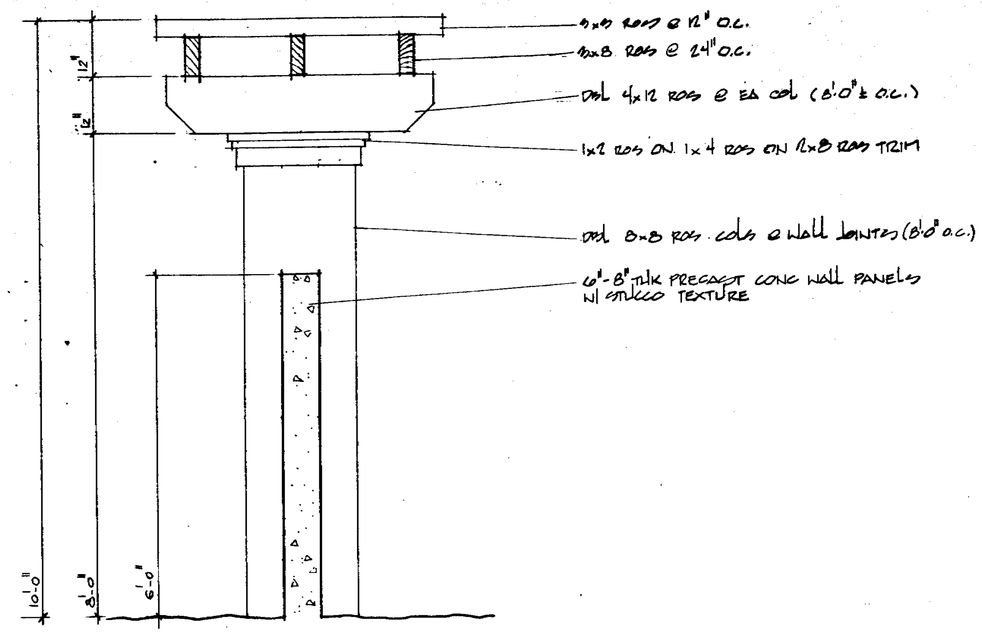

SOUND WALL/TRELLIS

1/4"=1'-0"

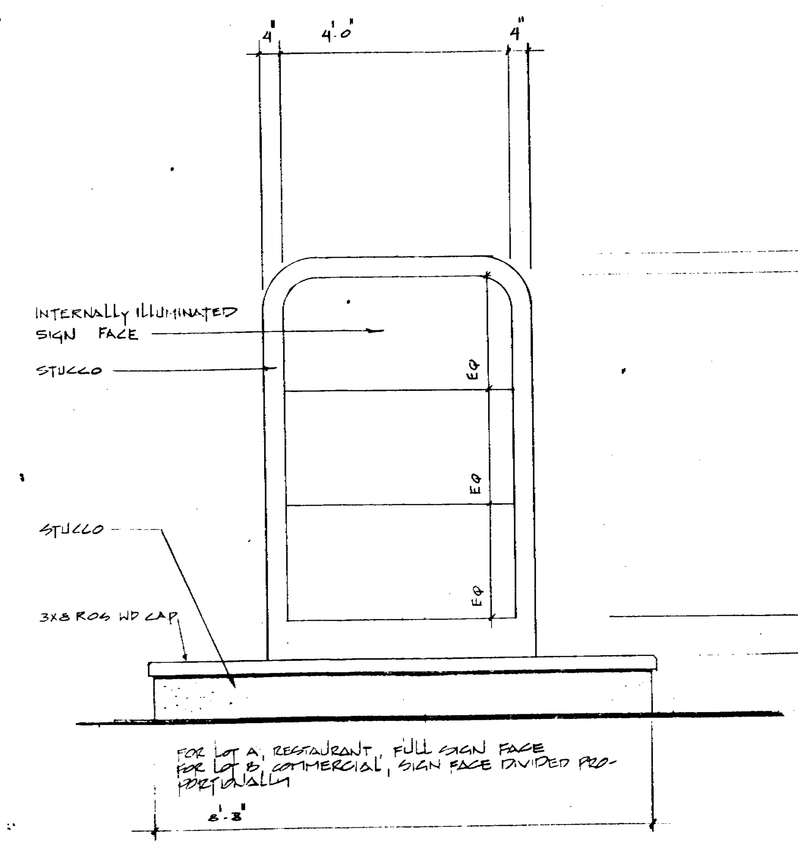

FRONT ELEVATION

SCALE 3/4"=1'-0"

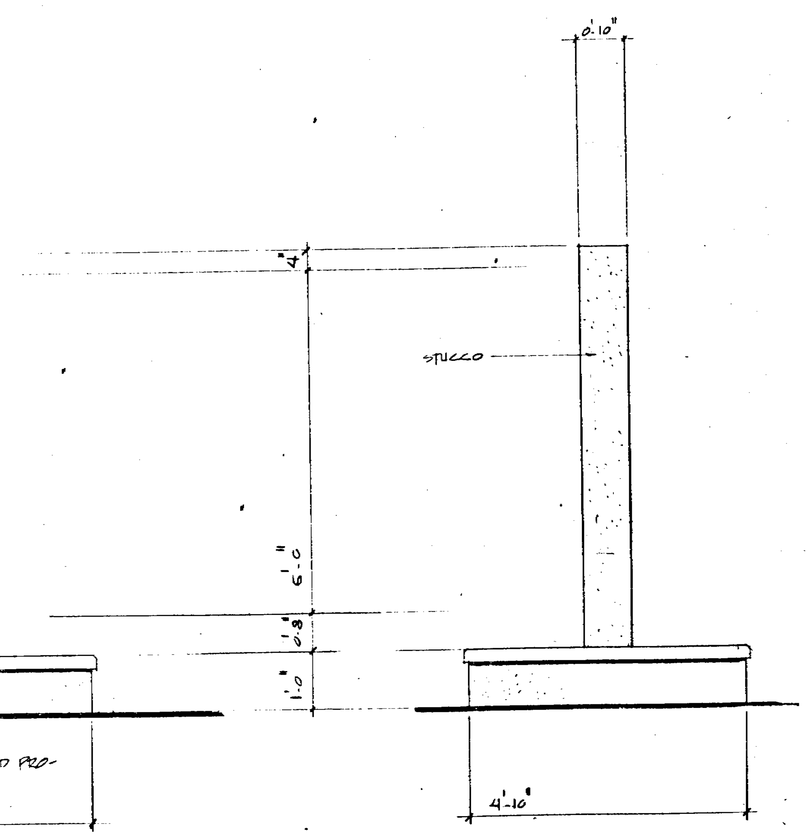

SIDE ELEVATION

SCALE 3/4"=1'-0"

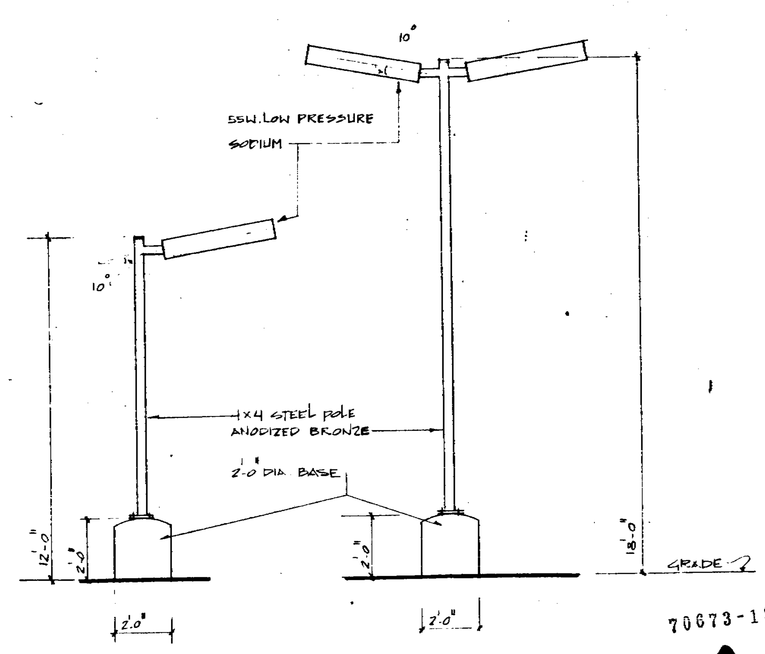

LIGHT STANDARD

SCALE 3/8"=1'-0"

70673-1976

46

REVISIONS	BY
4/10/07 SIGNAGE	RB

Backhaus Associates
Architecture – Landscape Architecture – Planning
844 Seventeenth Avenue Santa Cruz, California 95062 408-462-1870

Job Name:
ALUM ROCK @ CAPITOL AVE
SAN JOSE, CA

DRAWN	
CHECKED	
DATE	
SCALE	
JOB NO.	
SHEET	8
OF	SHEETS

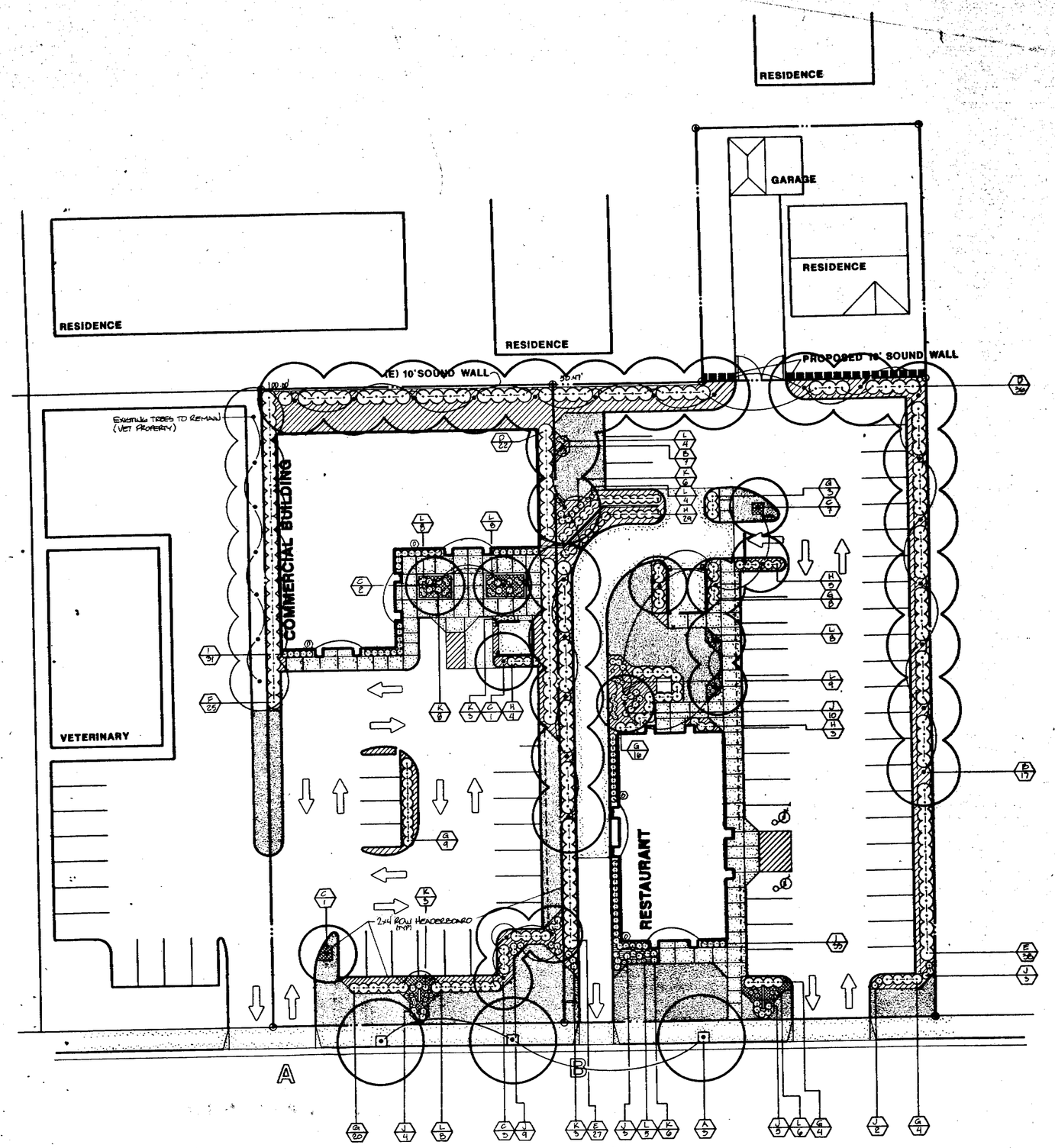

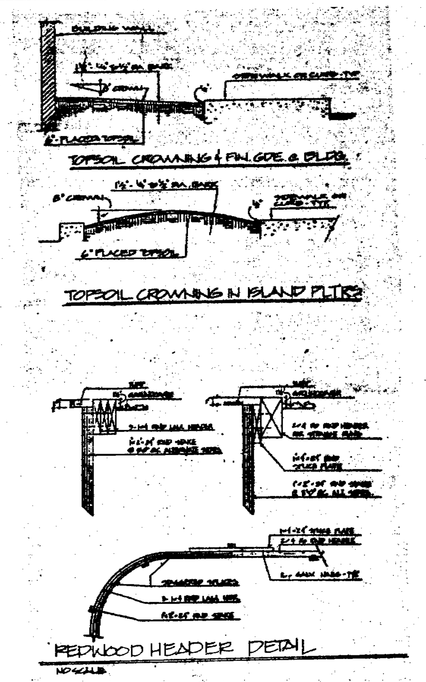

LANDSCAPE SPECIFICATIONS

1. RENOVATION & REMOVAL. The Landscape Contractor shall remove all trees, groundcovers, cross, ornamental gravel, chips, and other debris, stones unless otherwise noted on the Drawings. All items noted shall be removed from the site by use of truck or rental truck, dumpster.

2. FINE GRADING. All landscape areas shall be filled and/or mounded to match the Drawings. Imported fill material shall be sandy-loam soil and shall be free of weeds, sticks, trash, and foreign debris. All mounds and berms shall be thoroughly watered and compacted prior to planting.

3. SOIL PREPARATION. Rip or scarify all planting areas to a depth of 6 inches and moisten. Apply uniformly to all planting areas per every 1000 square feet, 3 cubic yards of redwood shavings and 150 pounds of GRO-POWER humotill amendments into top 6 inches of soil.

4. PLANT INSPECTION. Notify the Landscape Architect of plant material shipment. All Plants will be inspected at POINT OF ORIGIN for acceptance of shipment on project site. No plant material will be accepted at roothound or of poor quality. All material rejected shall be removed from the site without prior notice. Upon being given the Landscape Architect, the original price, material being given the Landscape Architect, the original price, material to remove and replace at his own expense. Contractor may be required to remove and replace at his own expense.

5. TREE & SHRUB PLANTING. The Planting Plans are a schematic guide to plant locations and due to actual field conditions, the planting may be required to be relocated, therefore contact the Landscape Architect for planting approval 24 hours in advance. Dig all plants pits twice the diameter and equal to the depth of the plant root ball. Flood plant pit and allow water to thoroughly percolate. Fill plant pit and adjacent soil prior to planting with 75% planting soil and 25% redwood shavings. Fertilizer shall be directed by the manufacturer's recommendations. Construct a 3" high basin around each plant and water thoroughly several times prior to removal of basin.

6. TREE STAKING & GUYING. All 5 and 15 gallon trees shall be staked using CONCEPTS tree stakes and all boxed or field grown specimens shall be guyed using 3 galvanized 10 gauge wire and 4" x 4" x 36" deadmen buried 24" below finish grade.

7. CONTAINERIZED PLANTING. Water area thoroughly to a 4 inch penetration the day before planting. Plant well rooted plants from flats in a triangular pattern. Water thoroughly after planting and fertilize each flat. Top dress with 25 pounds of GRO-POWER organic fertilizer.

8. CLEANUP OF SITE. Cleanup shall consist of cleaning daily each site by removing sage, plant cor ners, debris and packing shrubs.

9. MAINTENANCE. During the landscape process all areas shall be maintained continuously until the project has been completed and approved by the Landscape Architect.

10. GUARANTEE. The Landscape Contractor shall guarantee all container grown material up to 15 gallon size for a period of 60 days following final acceptance to be live and healthy. Container grown material 15 gallon size or larger shall be guaranteed to be live and healthy for 1 year beyond date of final acceptance.

NOTES

1. Treflan or Ratan pre-emergence herbicide is to be applied to all planter areas following manufacturer's specifications.
2. All planter beds to receive 2" of redwood or fir bark.
3. No slopes to exceed 30% except where specified.
4. All slopes exceeding 25% to receive jute netting except in swale areas.
5. 2"x4" rough redwood headerboard for straight runs and double 1/4"x4" for curves are to be placed between all zones and groundcover areas around 5' on center curves 1"x2"x12".

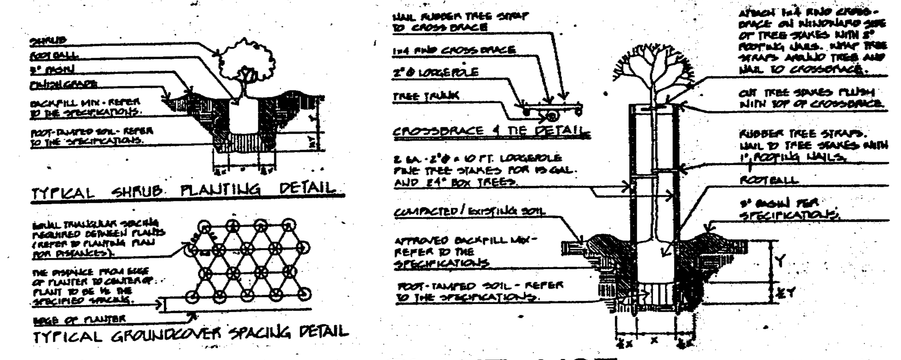

PLANT LIST

KEY	BOTANICAL NAME	COMMON NAME	SIZE	QUANITY	REMARKS
A	PLATANUS ACERFOLIA 'BLOODGOOD'	LONDON PLANE TREE	15GAL	3	
B	FICUS MICROCARPA 'NITIDA'	INDIAN LAUREL FIG	15GAL	24	
C	LAGERSTROEMIA INDICA 'CHEROKEE'	CRAPE MYRTLE	15GAL	14	
D	PHOTINIA FRASERI	FRASER'S PHOTINIA	5GAL	58	
E	ESCALLONIA EXONIENSIS 'FRADESI'	FRADE'S ESCALLONIA	5GAL	65	
F	PITOSPORUM TOBIRA 'VARIEGATA'	VARIEGATED PITOSPORUM	5GAL	25	
G	RAPHIOLEPIS INDICA 'SPRINGTIME'	INDIA HAWTHORNE	5GAL	69	
H	NERIUM OLEANDER 'PETITE SALMON'	DWF OLEANDER	5GAL	41	
I	AZALEA 'HAPPY DAYS'	LAVENDER AZALEA	5GAL	64	
J	AGAPANTHUS AFRICANUS	LILY OF THE NILE	1GAL	36	
K	EUROPS PECTINATUS 'SEA GREEN'	BUSH DAISY	1GAL	29	
L	FELICIA AMELLOIDES	BLUE MARGUERITE	1GAL	59	
M	HYPERICUM CALYCINUM	AARON'S BEARD	FLATS	AS PER PLAN	PLANT @ 14" O.C.
N	MARIGOLDS / SUN ANNUALS / PER SEASON		CLPKS	AS PER PLAN	PLANT @ 6" O.C.
O	IMPATIENS / SHADE ANNUALS / PER SEASON		CLPKS	AS PER PLAN	PLANT @ 6" O.C.
P	BLUEGRASS SOD.			AS PER PLAN	

SCALE: 1"=20'-0"

LANDSCAPE PLAN

OPTION 2

REVISIONS	BY
4-6-87	
SIGNATURE 4/10/87	D.B.

Backhaus Associates
Architecture - Landscape Architecture - Planning
944 Bonaventura Avenue Santa Cruz, California 95062 408-462-1870

Job Name:
ALUM ROCK SQUARE
ALUM ROCK @ CAPITOL AVE
SAN JOSE, CA

DRAWN	D.S.B.
CHECKED	
DATE	3-25-87
SCALE	1"=20'-0"
JOB NO.	
SHEET	9
OF	SHEETS