City of San Jose - Building Division - Index Cover

Address 2445 Fontaine Rd.

PLAN CHECK # _____ PERMIT # (B E P M) 10-0107-16

Prepared By SM Page # _____ Date 4.23.2010

Category	Document Type	Sub Document Type
☐ MP Tracts	☐ PP Plot Plans	
	☐ TP Tract Plans	☐ BD Building ☐ PB Plumbing ☐ MM Mechanical ☐ EE Electrical
	☐ TD Supporting Documents	
	☐ TC Structural Calculations	
	☐ TN Energy Calculations	
	☐ TS Soils Report	
	☐ TT Trusses/Shop Drawings	
	☐ TM Tract Map	☐ AR Addressed
☒ PL Plans	☐ PY Preliminary Plans	
	☒ EP Plans	☒ BL Building ☐ BP Plumbing ☐ BM Mechanical ☐ BE Electrical
	☐ PM Parcel Map	
	☐ AM Alternate Materials	
	☐ SC Structural Calculations	
	☐ EC Energy Calculations	
	☐ SD Supporting Documents	
	☐ SR Soils Report	
	☐ TR Trusses/Shop Drawing	
	☐ CR Copy Request	
☐ PT Permits	☐ AD Addressing	
	☐ IN Inspection Notices	☐ EP Expired
	☐ PR Permits & Applications	☐ CC Cash Receipts / Refunds ☐ CO C of O ☐ CP Correspondence ☐ EX Expired / Voided ☐ FI Finals ☐ IN Initial ☐ IS Initial – Supporting Doc's ☐ MR Meter Releases ☐ SI Special Inspection Reports
	☐ CF Compliance Files	☐ CN Compliance Notices ☐ RS Rescind ☐ SW Stop Work Orders
	☐ DR Damage Reports	☐ ED Earthquake Damage ☐ FD Flood Damage ☐ FA Fire/Auto Survey ☐ IV Investigation Survey

Rev. 06/27/2008

clear

CA-SJC0224D

CHUCK E CHEESE

2445 FONTAINE RD
SAN JOSE, CA 95121

PROPRIETARY INFORMATION

THE INFORMATION CONTAINED IN THIS SET OF CONSTRUCTION DOCUMENTS IS PROPRIETARY BY NATURE. ANY USE OR DISCLOSURE OTHER THAN THAT WHICH RELATES TO CARRIER SERVICES IS STRICTLY PROHIBITED.

clear
4400 CARILLON POINT
KIRKLAND, WA 98033

NSA Wireless, Inc.
Site Acquisition • Planning • Construction Management • Site Modifications
Bishop Ranch 15 1st Floor
12647 Alcosta Blvd., Suite 110
San Ramon, CA 94583
(925) 244-1890 OFFICE

CDG
CONNELL DESIGN GROUP, LLC
CONSULTING CIVIL ENGINEERS
4685 MACARTHUR COURT, SUITE 480, NEWPORT BEACH, CA 92660
(949) 753-8807 OFFICE - (949) 753-8833 FAX

Office

PROJECT INFORMATION

PROJECT DESCRIPTION:
CLEARWIRE PROPOSES TO CONSTRUCT AN UNSTAFFED TELECOMMUNICATIONS FACILITY CONSISTING OF A THREE-SECTOR ANTENNA ARRAY WITH (1) ANTENNA PER SECTOR AND (4) MICROWAVE DISHES (1) EQUIPMENT CABINET MOUNTED ON AN EXISTING ROOFTOP AND ONE GPS ANTENNA AND ALL ASSOCIATED UTILITY CONDUITS AND CABLES.

APPLICANT:
CLEARWIRE
4400 CARILLION POINT
KIRKLAND, WA 98033
PHONE: (425) 216-7600

PROPERTY OWNER:
NCA & ASSOCIATES
2445 FONTAINE RD.
SAN JOSE, CA 95122

PROJECT LEAD:
CONTACT: LARRY DANIEL
PH: (925) 244-1890

SITE ACQUISITION:
CONTACT: RACHEL FENTON
PH: (925) 216-1273

ZONING MANAGER
CONTACT: RACHEL FENTON
PH: (925) 216-1273

CONSTRUCTION:
CONTACT: MIRO MILOSEVICH
PH: (925) 202-1903

RF ENGINEER:
CONTACT: ALWYN DIPPENAAR
PH: (703) 201-3797

CODE INFORMATION:
ZONING CLASSIFICATION: C2
BUILDING CODE: 2007 CBC
CONSTRUCTION TYPE: V-B
OCCUPANCY: B
JURISDICTION: CITY OF SAN JOSE
CURRENT USE: TELECOMMUNICATIONS FACILITY
PROPOSED USE: TELECOMMUNICATIONS FACILITY

SITE LOCATION: (BASED ON NAD 83):
LATITUDE: 39.31869 N
LONGITUDE: -121.82941 W
TOP OF STRUCTURE AGL: 29'
BASE OF STRUCTURE AMSL: TBD

PARCEL NUMBER(S):
670-01-035

PROJECT AREA:
7' X 7' = 49 S.F. LEASE AREA

GENERAL INFORMATION:
1. PARKING REQUIREMENTS ARE UNCHANGED.
2. TRAFFIC IS UNAFFECTED.
3. SIGNAGE IS PROPOSED.
4. NO ADDITIONAL IMPERVIOUS AREA IS PROPOSED.

VICINITY MAP

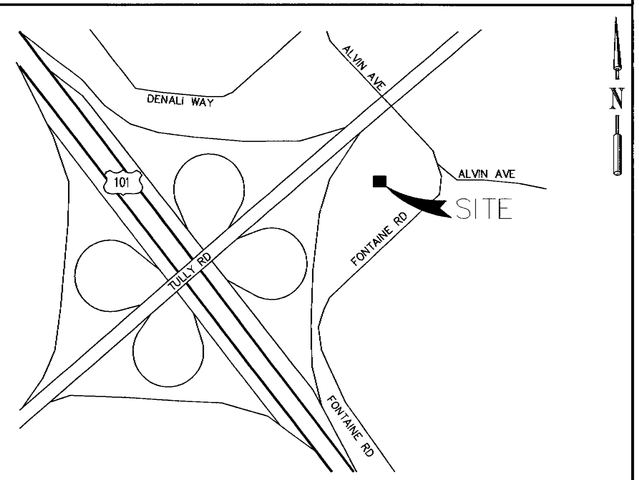

DRAWING INDEX

SHEET	DESCRIPTION
T-1	TITLE SHEET
T-2	GENERAL NOTES
A-1	SITE PLAN
A-2	ENLARGED SITE PLAN
A-3	ELEVATIONS
D-1	EQUIPMENT DETAILS
D-2	FENCE DETAILS
E-1	GROUNDING PLAN
E-2	GROUNDING DETAILS

LEGAL DESCRIPTION

THE LAND REFERRED TO HEREIN IS SITUATED IN THE STATE OF CALIFORNIA, COUNTY OF SANTA CLARA, DESCRIBED AS FOLLOWS:

T.B.D.

OFFICE SET

CITY OF SAN JOSE BUILDING DIVISION
APPROVED PLAN SET
( ) OFFICE SET ( ) FIELD SET
ADDRESS 2445 Fontaine Rd
PERMIT No. 10-076716 DATE 2-23-10
P.C. No. 10-002216 DATE 2-23-10
CODE EDITIONS: CBC, UMC, UPC 2007 NEC ___ ENERGY ___ TDI ___
OCCUPANCY GROUP(S) A-2 TYPE OF CONSTRUCTION V-B
PLANS APPROVED FOR: CHECKED BY: APPROVED BY
(X) BUILDING NON-STRUCT NISSAN NISSAN
(X) BUILDING STRUCT
( ) ~~ELECTRICAL~~
( ) ~~PLUMBING~~
( ) MECHANICAL
( ) ~~HEAT~~
( ) ~~GAS~~
( ) ZONING PLANNING PERMIT #
COMMENTS

BE10-076716

CA-SJC0224D
CHUCK E CHEESE
2445 FONTAINE RD
SAN JOSE, CA 95121

REGISTERED PROFESSIONAL ENGINEER DANIEL MICHAEL CONNELL No. 62543 Expires 12/31/11 CIVIL STATE OF CALIFORNIA

JAN 12 2010

DRIVING DIRECTIONS

DEPART FROM CARRIER OFFICE, IRVINE:
TAKE I-680 S VIA THE RAMP TO SAN JOSE 33.9 MI
TAKE THE EXIT ONTO US-101 S TOWARD LOS ANGELES 2.1 MI
EXIT ONTO TULLY RD 0.8 MI
TURN RIGHT AT ALVIN AVE 400 FT
TAKE THE 1ST RIGHT ONTO FONTAINE RD 354 FT

APPROVAL	DATE	SIGNATURE
CLEARWIRE:		
LANDLORD:		
CONST:		
S/A:		
R.F.:		
ZONING:		
A&E:		
R.F.:		
B.H.:		

REVIEWERS SHALL CLEARLY PLACE INITIALS ADJACENT TO EACH REDLINE NOTE AS DRAWINGS ARE BEING REVIEWED

ABBREVIATIONS

A/C	AIR CONDITIONING	HORZ	HORIZONTAL	PLYWD	PLYWOOD
AGL	ABOVE FINISH GRADE	HR	HOUR	PROJ	PROJECT
APPROX	APPROXIMATELY	HT	HEIGHT	PROP	PROPERTY
		HVAC	HEATING VENTILATION AIR CONDITIONING	PT	PRESSURE TREATED
BLDG	BUILDING			REQ	REQUIRED
BLK	BLOCKING			RM	ROOM
				SHT	SHEET
CLG	CEILING	ID	INSIDE DIAMETER	SIM	SIMILAR
CLR	CLEAR	IN	INCH	SPEC	SPECIFICATION
CONC	CONCRETE	INFO	INFORMATION	SF	SQUARE FOOT
CONST	CONSTRUCTION	INSUL	INSULATION	SS	STAINLESS STEEL
CONT	CONTINUOUS	INT	INTERIOR	STL	STEEL
		IBC	INTERNATIONAL BUILDING CODE	STRUCT	STRUCTURAL
DBL	DOUBLE			STD	STUD
DIA	DIAMETER			SUSP	SUSPENDED
DIAG	DIAGONAL	LBS	POUNDS		
DN	DOWN	MAX	MAXIMUM	THRU	THROUGH
DET	DETAIL	MECH	MECHANICAL	TNNG	TINNED
DWG	DRAWING	MTL	METAL	TYP	TYPICAL
		MFR	MANUFACTURE		
EA	EACH	MGR	MANAGER	UNO	UNLESS NOTED OTHERWISE
ELEV	ELEVATION	MIN	MINIMUM		
ELEC	ELECTRICAL	MISC	MISCELLANEOUS	VERT	VERTICAL
EQ	EQUAL	RO	ROUGH OPENING	VIF	VERIFY IN FIELD
EQUIP	EQUIPMENT				
EXT	EXTERIOR	NA	NOT APPLICABLE	W/	WITH
		NIC	NOT IN CONTRACT	W/O	WITHOUT
FIN	FINISH	NTS	NOT TO SCALE	WP	WATER PROOF
FLUOR	FLUORESCENT				
FLR	FLOOR	OC	ON CENTER		
FT	FOOT	OD	OUTSIDE DIAMETER		
GA	GAUGE				
GALV	GALVANIZED				
GC	GENERAL CONTRACTOR				
GRND	GROUND				
GYP BD	GYPSUM WALL BOARD				

PROJECT TEAM

PROJECT ENGINEER
DAN CONNELL, PE
CONNELL DESIGN GROUP, LLC
4685 MACARTHUR CT., SUITE 480
NEWPORT BEACH, CA 92660
CONTACT: DAN CONNELL
PH: (949) 753-8807
DCONNELL@CONNELLDESIGNGROUP.COM

PROJECT CONSULTANT
NSA WIRELESS
12647 ALCOSTA BLVD., SUITE 110
SAN RAMON, CA 94583
PH: (925) 244-1890
CONTACT: LARRY DANIEL

REVISIONS

NO.	DATE	DESCRIPTION	INITIAL
1	11/24/09	90% CD	FC
2	12/24/09	100% CD	FC
3	01/05/10	100% CD	EN

FOR CONSTRUCTION

SHEET TITLE
TITLE SHEET

SHEET NUMBER
T-1

THE INFORMATION CONTAINED IN THIS SET OF CONSTRUCTION DOCUMENTS IS PROPRIETARY BY NATURE. ANY USE OR DISCLOSURE OTHER THAN THAT WHICH RELATES TO CARRIER SERVICES IS STRICTLY PROHIBITED.

1. THE LATEST EDITION OF THE AMERICAN INSTITUTE OF ARCHITECTS DOCUMENT A201 "GENERAL CONDITIONS OF THE CONTRACT FOR CONSTRUCTION" ARE INCLUDED IN THESE SPECIFICATIONS AS IF COMPLETELY REPRODUCED HEREIN.

2. THIS FACILITY IS AN UNOCCUPIED PCS TELECOMMUNICATIONS SITE AND IS EXEMPT FROM DISABLED ACCESS REQUIREMENTS.

3. PRIOR TO THE SUBMISSION OF BIDS, THE CONTRACTORS PARTICIPATING SHALL VISIT THE JOB SITE AND FAMILIARIZE THEMSELVES WITH ALL CONDITIONS AFFECTING THE NEW PROJECT, WITH THE CONSTRUCTION AND CONTRACT DOCUMENTS, FIELD CONDITIONS, AND CONFIRM THAT THE PROJECT CAN BE ACCOMPLISHED AS SHOWN, PRIOR TO PROCEEDING WITH SUBMISSION OF BIDS & CONSTRUCTION. SHOULD ANY ERRORS, OMISSION, OR DISCREPANCIES BE FOUND, THE CONTRACTORS SHALL IMMEDIATELY NOTIFY PROJECT MANAGER, AND THE ARCHITECT IN WRITING. IN THE EVENT OF DISCREPANCIES, THE CONTRACTOR SHALL INCLUDE THE MORE COSTLY OR EXTENSIVE WORK IN THE BID, UNLESS SPECIFICALLY DIRECTED OTHERWISE. IF A DISCREPANCY EXISTS AND THE PROJECT MANAGER AND ARCHITECT ARE NOT NOTIFIED, THE GENERAL CONTRACTOR SHALL BE HELD RESPONSIBLE FOR ALL COSTS INCURRED TO REPAIR OR CORRECT ALL PROBLEMS THAT RESULT.

4. DRAWINGS SHALL NOT BE SCALED. FIGURED DIMENSIONS HAVE PRECEDENCE OVER DRAWING SCALE AND DETAIL DRAWINGS HAVE PRECEDENCE OVER SMALL SCALE DRAWINGS. CONTRACTOR SHALL CHECK ACCURACY OF ALL DIMENSIONS IN THE FIELD. UNLESS SPECIFICALLY NOTED, DO NOT FABRICATE ANY MATERIALS, OR BEGIN ANY CONSTRUCTION UNTIL THE ACCURACY OF DRAWING DIMENSIONS HAS BEEN VERIFIED AGAINST ACTUAL FIELD DIMENSIONS.

5. CONTRACTOR SHALL NOTIFY THE PROJECT MANAGER AND THE ARCHITECT IF ANY DETAILS ARE CONSIDERED IMPRACTICAL, UNSUITABLE, UNSAFE, NOT WATERPROOF, OR NOT WITHIN CUSTOMARY TRADE PRACTICE. IF WORK IS PERFORMED, IT WILL BE ASSUMED THAT THERE IS NO OBJECTION TO ANY DETAIL. DETAILS ARE INTENDED TO SHOW THE END RESULT OF THE DESIGN. MINOR MODIFICATIONS MAY BE REQUIRED TO SUIT JOB CONDITIONS, AND SHALL BE INCLUDED AS PART OF THE WORK.

6. (E) ELEVATIONS AND LOCATIONS TO BE JOINED SHALL BE VERIFIED BY THE CONTRACTOR BEFORE CONSTRUCTION. IF THEY DIFFER FROM THOSE SHOWN ON THE PLANS, THE CONTRACTOR SHALL NOTIFY THE PROJECT MANAGER, AND THE ARCHITECT SO THAT MODIFICATIONS CAN BE MADE BEFORE PROCEEDING WITH THE WORK.

7. ALL SYMBOLS AND ABBREVIATIONS USED ON THE DRAWINGS ARE CONSIDERED CONSTRUCTION STANDARDS. IF THE CONTRACTOR HAS QUESTIONS REGARDING THEIR EXACT MEANING, THE PROJECT MANAGER, AND THE ARCHITECT SHALL BE NOTIFIED FOR CLARIFICATION BEFORE THE CONTRACTOR PROCEEDS WITH THE WORK.

8. THE CONTRACTOR SHALL OBTAIN AND PAY FOR PERMITS, LICENSES AND INSPECTIONS NECESSARY FOR PERFORMANCE OF THE WORK AND INCLUDE THOSE IN THE COST OF THE WORK TO ROYAL STREET.

9. THE CONTRACTOR SHALL SUPERVISE AND DIRECT ALL WORK, USING THE BEST SKILL AND ATTENTION. HE SHALL BE SOLELY RESPONSIBLE FOR ALL CONSTRUCTION MEANS, METHODS, TECHNIQUES, PROCEDURES AND SEQUENCES, AND FOR COORDINATING ALL PORTIONS OF THE WORK UNDER THE CONTRACT, INCLUDING CONTACT AND COORDINATION WITH THE IMPLEMENTATION ENGINEER AND WITH THE LANDLORD'S AUTHORIZED REPRESENTATIVE'S

10. WORKMANSHIP THROUGHOUT SHALL BE OF THE BEST QUALITY OF THE TRADE INVOLVED, AND SHALL MEET OR EXCEED THE FOLLOWING MINIMUM REFERENCE STANDARDS FOR QUALITY AND PROFESSIONAL CONSTRUCTION PRACTICE:

NRCA – NATIONAL ROOFING CONTRACTORS ASSOCIATION
O'HARE INTERNATIONAL CENTER
10255 W. HIGGENS ROAD, SUITE 600 ROSEMONT, IL 60018
SMACNA – SHEET METAL AND AIR CONDITIONING CONTRACTORS NATIONAL ASSOCIATION
4201 LAFAYETTE CENTER DRIVE CHATTILY, VA 22021–1209

ITLP – INTERNATIONAL INSTITUTE FOR LATH AND PLASTER
820 TRANSFER ROAD
ST. PAUL, MN 55114–1406
AMA – ADHESIVE MANUFACTURERS ASSOCIATION
401 NORTH MICHIGAN AVENUE, SUITE 2400
CHICAGO, IL 60611

11. THE CONTRACTOR SHALL VERIFY, COORDINATE, AND PROVIDE ALL NECESSARY BLOCKING, BACKING, FRAMING, HANGERS OR OTHER SUPPORTS FOR ALL ITEMS REQUIRING THE SAME.

12. ALL WORK PERFORMED AND MATERIALS INSTALLED SHALL BE IN STRICT ACCORDANCE WITH ALL APPLICABLE CODES, REGULATIONS AND ORDINANCES. CONTRACTORS SHALL GIVE ALL NOTICES AND COMPLY WITH ALL LAWS, ORDINANCES, RULES, REGULATIONS AND LAWFUL ORDERS OF ANY PUBLIC AUTHORITY REGARDING THE PERFORMANCE OF THE WORK. MECHANICAL AND ELECTRICAL SYSTEMS SHALL BE INSTALLED IN ACCORDANCE WITH ALL APPLICABLE MUNICIPAL AND UTILITY COMPANY SPECIFICATIONS, LOCAL AND STATE JURISDICTIONAL CODES, ORDINANCES AND APPLICABLE REGULATIONS. CONTRACTORS SHALL COMPLY WITH STATE DEPARTMENT OF INDUSTRIAL REGULATIONS AND DIVISION OF INDUSTRIAL SAFETY (OSHA) REQUIREMENTS.

13. CONTRACTORS SHALL PROTECT THE OWNERS' PROPERTY FROM DAMAGE WHICH MAY OCCUR DURING CONSTRUCTION. ANY DAMAGE TO NEW AND (E) CONSTRUCTION, STRUCTURE, LANDSCAPING, CURBS, STAIRS, OR EQUIPMENT, ETC., SHALL BE IMMEDIATELY REPAIRED OR REPLACED TO THE SATISFACTION OF THE PROPERTY OWNER, OR HIS REPRESENTATIVE, AND ROYAL STREET' REPRESENTATIVE, AT THE EXPENSE OF THE CONTRACTOR.

14. THE CONTRACTOR SHALL BE RESPONSIBLE FOR, AND SHALL REPLACE OR REMEDY, ANY FAULTY, IMPROPER, OR INFERIOR MATERIALS OR WORKMANSHIP, OR ANY DAMAGE WHICH SHALL APPEAR WITHIN ONE YEAR AFTER THE COMPLETION AND ACCEPTANCE OF THE WORK UNDER THIS CONTRACT BY ROYAL STREET.

15. ALL SITE WORK SHALL BE CAREFULLY COORDINATED BY GENERAL CONTRACTOR WITH LOCAL UTILITY COMPANY, TELEPHONE COMPANY, AND ANY OTHER UTILITY COMPANIES HAVING JURISDICTION OVER THIS LOCATION. IT SHALL BE THE RESPONSIBILITY OF THE GENERAL CONTRACTOR TO LOCATE ALL (E) UTILITIES, WHETHER SHOWN HEREIN OR NOT, AND TO PROTECT THEM FROM DAMAGE. THE CONTRACTORS SHALL BEAR ALL EXPENSES FOR REPAIR OR REPLACEMENT OF UTILITIES OR OTHER PROPERTY DAMAGED IN CONJUNCTION WITH THE EXECUTION OF WORK.

16. THE CONTRACTOR SHALL BE RESPONSIBLE FOR THE COMPLETE SECURITY OF THE PROJECT SITE WHILE THE JOB IS IN PROGRESS AND UNTIL THE JOB IS COMPLETED AND ACCEPTED BY ROYAL STREET.

17. THE CONTRACTOR SHALL PROVIDE TEMPORARY WATER, POWER AND TOILET FACILITIES AS REQUIRED BY THE PROPERTY OWNER AND THE CITY OR GOVERNING AGENCY.

18. THE LATEST EDITION OF ALL PERMITTED AND APPROVED PLANS PERTAINING TO THIS PROJECT SHALL BE KEPT IN A PLAN BOX AND SHALL NOT BE USED BY WORKERS. ALL CONSTRUCTION SETS SHALL REFLECT THE SAME INFORMATION. THE CONTRACTOR SHALL ALSO MAINTAIN IN GOOD CONDITION, ONE COMPLETE SET OF PLANS WITH ALL REVISIONS, ADDENDA AND CHANGE ORDERS, ON THE PREMISES AT ALL TIMES. THESE ARE TO BE UNDER THE CARE OF THE JOB SUPERINTENDENT.

19. THE CONTRACTOR SHALL REMOVE ALL RUBBISH AND WASTE MATERIALS ON A DAILY BASIS, AND SHALL EXERCISE STRICT CONTROL OVER JOB CLEANING THROUGHOUT CONSTRUCTION, INCLUDING FINAL CLEANUP UPON COMPLETION OF WORK. ALL AREAS ARE TO BE LEFT IN A BROOM CLEAN CONDITION AT THE END OF EACH DAY. ALL MATERIALS COLLECTED DURING CLEANING OPERATIONS SHALL BE DISPOSED OF OFF–SITE BY THE GENERAL CONTRACTOR.

20. THE GENERAL CONTRACTOR MUST PERFORM WORK DURING PROPERTY OWNER'S PREFERRED HOURS TO AVOID DISRUPTION OF NORMAL ACTIVITY.

21. ALL EXPOSED METAL SHALL BE HOT–DIPPED GALVANIZED.

22. SEAL ALL PENETRATIONS THROUGH FIRE–RATED AREAS WITH U.L. LISTED OR FIRE MARSHALL APPROVED MATERIALS IF AND WHERE APPLICABLE TO THIS FACILITY AND PROJECT SITE.

23. PROVIDE A PORTABLE FIRE EXTINGUISHER WITH A RATING OF NOT LESS THAN 2–A OR 2–A, 10–BC WITHIN 75 FEET TRAVEL DISTANCE TO ALL PORTIONS OF THE PROJECT CONSTRUCTION AREA.

24. ELECTRICAL POWER SYSTEM SHALL BE GROUNDED PER NEC ARTICLES 250 AND 810.

25. ALL NEW OPENINGS IN THE EXTERIOR ENVELOPE OF CONDITIONED SPACES SUCH AS AT WALL AND ROOF PENETRATIONS SHALL BE CAULKED OR SEALED TO LIMIT INFILTRATION OF AIR AND MOISTURES.

26. U.N.O., CONTRACTOR SHALL PROVIDE CLOSE–OUT PACKAGE TO ROYAL STREET WHICH WILL INCLUDE:

(CONTRACTOR SHALL REFER TO THEIR CURRENT CONTRACT FOR A COMPLETE LIST OF DELIVERABLES.)

A. BUILDING PERMITS/ELECTRICAL PERMITS
B. FINAL INSPECTION CARD
C. STAMPED BUILDING PERMIT PLANS
D. GROUNDING TEST
E. SWEEP TEST
F. CONCRETE TEST
G. SPECIAL INSPECTION REPORTS
H. WARRANTIES, MANUAL, EQUIPMENT SPECIFICATIONS
I. SUBCONTRACTOR CONTACT LIST
J. RED LINED ASBUILTS
K. CONSTRUCTION PROCESS PHOTOS
L. SITE COMPLETION PHOTOS
M. A WRITTEN REPORT ON ANTENNA SERIAL NUMBER FOR EACH SECTOR
N. MANUFACTURER'S PERFORMANCE REPORT FOR EACH ANTENNA

CONTRACTOR SHALL REFER TO THEIR CURRENT CONTRACT FOR A COMPLETE LIST OF DELIVERABLES.

STORMWATER POLLUTION PREVENTION NOTES:

STORMWATER POLLUTION PREVENTION DEVICES AND PRACTICES SHALL BE INSTALLED AND/OR INSTITUTED AS NECESSARY TO ENSURE COMPLIANCE TO THE LOCAL WATER QUALITY STANDARDS CONTAINED IN THE APPLICABLE MUNICIPAL CODES AND ANY EROSION CONTROL PLANS ASSOCIATED WITH THIS PROJECT. ALL SUCH DEVICES AND PRACTICES SHALL BE MAINTAINED, INSPECTED AND/OR MONITORED TO ENSURE ADEQUACY AND PROPER FUNCTION THROUGHOUT THE DURATION OF THE CONSTRUCTION PROJECT.

COMPLIANCE TO THE WATER QUALITY STANDARDS AND ANY EROSION CONTROL PLAN ASSOCIATED WITH THIS PROJECT INCLUDES, BUT IS NOT LIMITED TO THE FOLLOWING REQUIREMENTS:

1. SEDIMENTS AND OTHER POLLUTANTS SHALL BE RETAINED ON SITE UNTIL PROPERLY DISPOSED OF, AND MAY NOT BE TRANSPORTED FROM THE SITE VIA SHEET FLOW, SWALES, AREA DRAINS, NATURAL DRAINAGE COURSES OR WIND.

2. STOCKPILES OF EARTH AND OTHER CONSTRUCTION–RELATED MATERIALS SHALL BE PROTECTED FROM BEING TRANSPORTED FROM THE SITE BY THE FORCES OF WIND AND WATER FLOW.

3. FUELS, OILS, SOLVENTS, AND OTHER TOXIC MATERIALS SHALL BE STORED IN ACCORDANCE WITH THEIR LISTING AND ARE NOT TO CONTAMINATE THE SOIL AND SURFACE WATERS. ALL MUST BE CLEANED UP IMMEDIATELY AND DISPOSED OF IN A PROPER MANNER. SPILLS MAY NOT BE WASHED INTO THE DRAINAGE SYSTEM, NOR BE ALLOWED TO SETTLE OR INFILTRATE INTO SOIL.

4. EXCESS OR WASTE CONCRETE MAY NOT BE WASHED INTO THE PUBLIC WAY OR ANY OTHER DRAINAGE SYSTEM. PROVISIONS SHALL BE MADE TO RETAIN CONCRETE WASTES ON SITE UNTIL THEY CAN BE DISPOSED OF AS SOLID WASTES.

5. TRASH AND CONSTRUCTION SOLID WASTES SHALL BE DEPOSITED INTO A COVERED RECEPTACLE TO PREVENT CONTAMINATION OF RAINWATER AND DISPERSAL BY WIND.

6. SEDIMENTS AND OTHER MATERIALS MAY NOT BE TRACKED FROM THE SITE BY VEHICULAR TRAFFIC. THE CONSTRUCTION ENTRANCE ROADWAYS MUST BE STABILIZED SO AS TO INHIBIT SEDIMENTS FROM BEING DEPOSITED INTO THE PUBLIC WAY. ACCIDENTAL DEPOSITS SHALL BE SWEPT UP IMMEDIATELY AND MAY NOT BE WASHED DOWN BY RAIN OR OTHER MEANS.

7. ANY SLOPES WITH DISTRIBUTED SOILS OR REMOVED VEGETATION SHALL BE STABILIZED TO INHIBIT EROSION BY WIND AND WATER.

8. STORMWATER POLLUTION PREVENTION DEVICES AND/OR PRACTICES SHALL BE MODIFIED AS NEEDED AS THE PROJECT PROGRESSES TO ENSURE EFFECTIVENESS.

GENERAL NOTES 2

1. PLANS ARE INTENDED TO BE A DIAGRAMMATIC OUTLINE ONLY, UNLESS NOTED OTHERWISE. THE WORK SHALL INCLUDE FURNISHING MATERIALS, EQUIPMENT, APPURTENANCES AND LABOR NECESSARY TO COMPLETE ALL INSTALLATIONS AS INDICATED ON THE DRAWINGS.

2. THE CONTRACTOR SHALL OBTAIN, IN WRITING, AUTHORIZATION TO PROCEED BEFORE STARTING WORK ON ANY ITEM NOT CLEARLY DEFINED OR IDENTIFIED BY THE CONTRACT DOCUMENTS. CONTRACTOR TO VERIFY ALL EXISTING CONDITIONS PRIOR TO CONSTRUCTION INCLUDING BUT NOT LIMITED TO DIMENSIONS, UNDERGROUND UTILITIES, EXISTING STRUCTURAL COMPONENTS (BEAMS, COLUMNS, SLABS, JOISTS, ETC.)

3. CONTRACTOR SHALL CONTACT USA (UNDERGROUND SERVICE ALERT,) AT (800) 227–2600, FOR UTILITY LOCATIONS, 48 HRS BEFORE PROCEEDING WITH ANY EXCAVATION, SITE WORK OR CONSTRUCTION.

4. THE CONTRACTOR SHALL INSTALL ALL EQUIPMENT AND MATERIALS IN ACCORDANCE WITH MANUFACTURER'S RECOMMENDATIONS UNLESS SPECIFICALLY INDICATED OTHERWISE, OR WHERE LOCAL CODES OR REGULATIONS TAKE PRECEDENCE.

5. ALL CONSTRUCTION SHALL BE IN ACCORDANCE WITH THE CBC'S REQUIREMENTS REGARDING EARTHQUAKE RESISTANCE, FOR, BUT NOT LIMITED TO, PIPING, LIGHT FIXTURES, CEILING GRID, INTERIOR PARTITIONS, AND MECHANICAL EQUIPMENT. ALL WORK MUST COMPLY WITH LOCAL EARTHQUAKE CODES AND REGULATIONS.

6. REPRESENTATIONS OF TRUE NORTH, OTHER THAN THOSE FOUND ON THE PLOT OF SURVEY DRAWING, SHALL NOT BE USED TO IDENTIFY OR ESTABLISH THE BEARING OF TRUE NORTH AT THE SITE. THE CONTRACTOR SHALL RELY SOLELY ON THE PLOT OF SURVEY DRAWING AND ANY SURVEYOR'S MARKINGS AT THE SITE FOR THE ESTABLISHMENT OF TRUE NORTH, AND SHALL NOTIFY THE ARCHITECT/ENGINEER PRIOR TO PROCEEDING WITH THE WORK IF ANY DISCREPANCY IS FOUND BETWEEN THE VARIOUS ELEMENTS OF THE WORKING DRAWINGS AND THE TRUE NORTH ORIENTATION AS DEPICTED ON THE CIVIL SURVEY. THE CONTRACTOR SHALL ASSUME SOLE LIABILITY FOR ANY FAILURE TO NOTIFY THE ARCHITECT/ENGINEER.

7. THE BUILDING DEPARTMENT ISSUING THE PERMITS SHALL BE NOTIFIED AT LEAST TWO WORKING DAYS PRIOR TO THE COMMENCEMENT OF WORK, OR AS OTHERWISE STIPULATED BY THE CODE ENFORCEMENT OFFICIAL HAVING JURISDICTION.

8. THE ARCHITECT/ENGINEER, CONNELL DESIGN GROUP LLC, AND REPRESENTATIVES OF THE OWNER, MUST BE NOTIFIED AT LEAST TWO FULL DAYS PRIOR TO COMMENCEMENT OF CONSTRUCTION.

9. DO NOT EXCAVATE OR DISTURB BEYOND THE PROPERTY LINES OR LEASE LINES, UNLESS OTHERWISE NOTED.

10. ALL EXISTING UTILITIES, FACILITIES, CONDITIONS, AND THEIR DIMENSIONS SHOWN ON PLANS HAVE BEEN PLOTTED FROM AVAILABLE RECORDS. THE ARCHITECT/ENGINEER AND THE OWNER ASSUME NO RESPONSIBILITY WHATSOEVER AS TO THE SUFFICIENCY OR ACCURACY OF THE INFORMATION SHOWN ON THE PLANS, OR THE MANNER OF THEIR REMOVAL OR ADJUSTMENT. CONTRACTORS SHALL BE RESPONSIBLE FOR DETERMINING EXACT LOCATION OF ALL EXISTING UTILITIES AND FACILITIES PRIOR TO START OF CONSTRUCTION. CONTRACTORS SHALL ALSO OBTAIN FROM EACH UTILITY COMPANY DETAILED INFORMATION RELATIVE TO WORKING SCHEDULES AND METHODS OF REMOVING OR ADJUSTING EXISTING UTILITIES.

11. CONTRACTOR SHALL VERIFY ALL EXISTING UTILITIES, BOTH HORIZONTALLY AND VERTICALLY, PRIOR TO START OF CONSTRUCTION. ANY DISCREPANCIES OR DOUBTS AS TO THE INTERPRETATION OF PLANS SHOULD BE IMMEDIATELY REPORTED TO THE ARCHITECT/ENGINEER FOR RESOLUTION AND INSTRUCTION, AND NO FURTHER WORK SHALL BE PERFORMED UNTIL THE DISCREPANCY IS CHECKED AND CORRECTED BY THE ARCHITECT/ENGINEER. FAILURE TO SECURE SUCH INSTRUCTION MEANS CONTRACTOR WILL HAVE WORKED AT HIS/HER OWN RISK AND EXPENSE.

12. ALL NEW AND EXISTING UTILITY STRUCTURES ON SITE AND IN AREAS TO BE DISTURBED BY CONSTRUCTION SHALL BE ADJUSTED TO FINISH ELEVATIONS PRIOR TO FINAL INSPECTION OF WORK.

13. ANY DRAIN AND/OR FIELD TILE ENCOUNTERED DURING CONSTRUCTION SHALL BE RETURNED TO ITS ORIGINAL CONDITION PRIOR TO COMPLETION OF WORK. SIZE, LOCATION AND TYPE OF ANY UNDERGROUND UTILITIES OR IMPROVEMENTS SHALL BE ACCURATELY NOTED AND PLACED ON "AS–BUILT" DRAWINGS BY GENERAL CONTRACTOR, AND ISSUED TO ARCHITECT/ENGINEER AT COMPLETION OF PROJECT.

14. ALL TEMPORARY EXCAVATIONS FOR THE INSTALLATION OF FOUNDATIONS, UTILITIES, ETC., SHALL BE PROPERLY LAID BACK OR BRACED IN ACCORDANCE WITH CORRECT OCCUPATIONAL SAFETY AND HEALTH ADMINISTRATION (OSHA) REQUIREMENTS.

15. INCLUDE MISC. ITEMS PER CLEARWIRE SPECIFICATIONS AND THE CURRENT EDITION OF THE CLEARWIRE CONSTRUCTION MANUAL.

GENERAL CONSTRUCTION NOTES 1

THE INFORMATION CONTAINED IN THIS SET OF CONSTRUCTION DOCUMENTS IS PROPRIETARY BY NATURE. ANY USE OR DISCLOSURE OTHER THAN THAT WHICH RELATES TO CARRIER SERVICES IS STRICTLY PROHIBITED.

clear
4400 CARILLON POINT
KIRKLAND, WA 98033

NSA Wireless, Inc.
Site Acquisition · Planning · Construction Management · Site Modifications
Bishop Ranch 15 1st Floor
12667 Alcosta Blvd., Suite 110
San Ramon, CA 94583
(925) 244-1690 OFFICE

CDG
CONNELL DESIGN GROUP, LLC
CONSULTING CIVIL ENGINEERS
4985 MACARTHUR BOULEVARD, SUITE 400 NEWPORT BEACH CA 92660
(949) 753-8807 OFFICE · (949) 753-8833 FAX

CA-SJC0224D
CHUCK E CHEESE
2445 FONTAINE RD
SAN JOSE, CA 95121

REGISTERED PROFESSIONAL ENGINEER
DANIEL MICHAEL CONELL
No. 62543
Expires 12/31/11
CIVIL
STATE OF CALIFORNIA

JAN 1 2 2010

REVISIONS

NO.	DATE	DESCRIPTION	INITIAL
1	11/24/09	90% CD	FC
2	12/24/09	100% CD	FC
3	01/05/10	100% CD	EN

FOR CONSTRUCTION

SHEET TITLE
GENERAL NOTES

SHEET NUMBER
T-2

NOTE:

SITE PLAN DRAWN WITHOUT THE BENEFIT OF A SURVEY

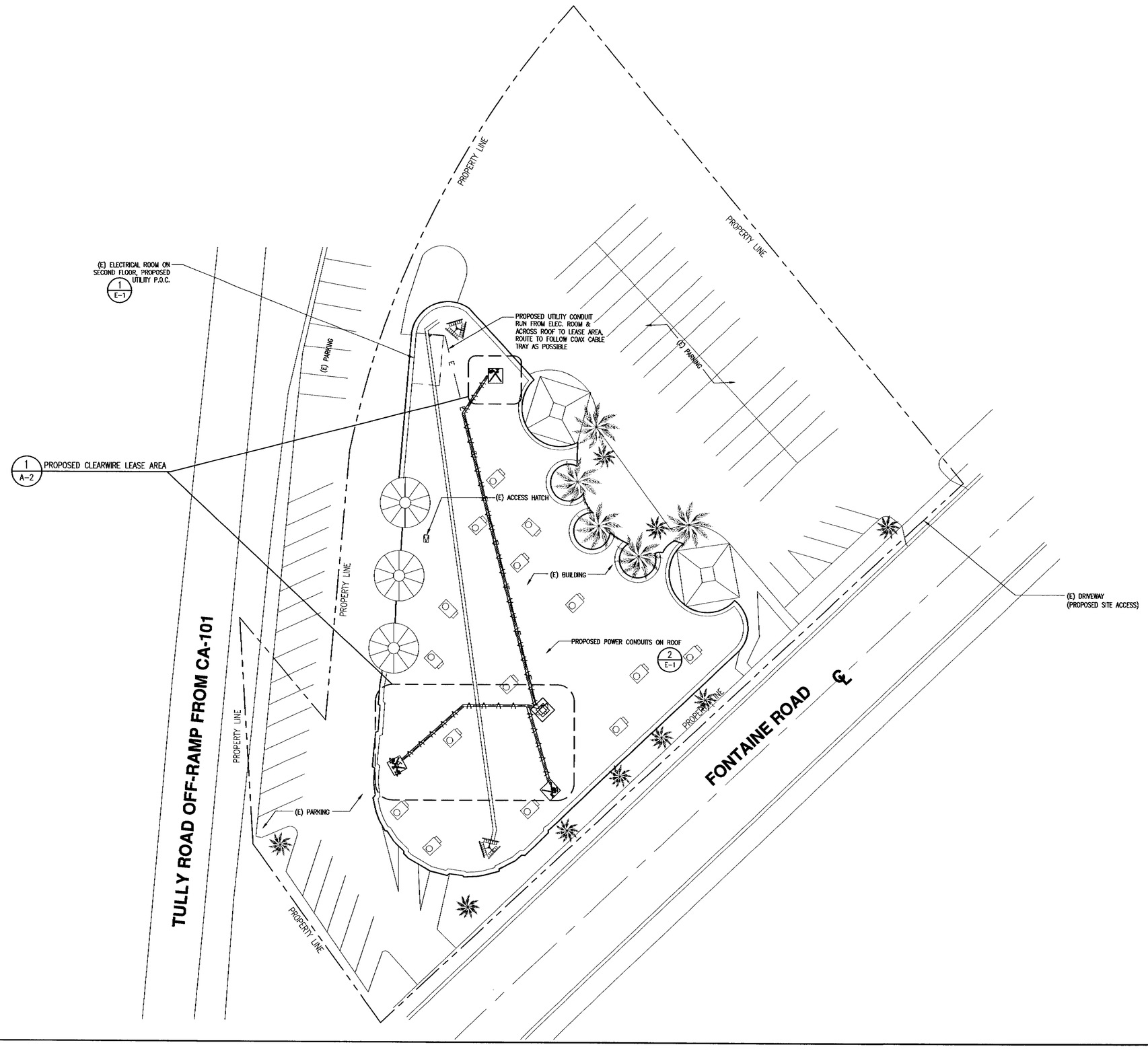

SITE PLAN

SCALE: 1"=20'-0" (0 10' 20')

1

THE INFORMATION CONTAINED IN THIS SET OF CONSTRUCTION DOCUMENTS IS PROPRIETARY BY NATURE. ANY USE OR DISCLOSURE OTHER THAN THAT WHICH RELATES TO CARRIER SERVICES IS STRICTLY PROHIBITED.

clear

4400 CARILLON POINT
KIRKLAND, WA 98033

NSA Wireless, Inc.

Site Acquisition · Planning · Construction Management · Site Modifications

Bishop Ranch 15 1st Floor
12667 Alcosta Blvd. Suite 110
San Ramon, CA 94583
(925) 244-1500 OFFICE

CONNELL DESIGN GROUP, LLC
CONSULTING CIVIL ENGINEERS
4685 MACARTHUR COURT, SUITE 450, NEWPORT BEACH, CA 92660
(949) 753-8807 OFFICE - (949) 753-8833 FAX

CA-SJC0224D

CHUCK E CHEESE
2445 FONTAINE RD
SAN JOSE, CA 95121

REGISTERED PROFESSIONAL ENGINEER
DANIEL MICHAEL CONNELL
No. 65543
Expires 12/31/11
CIVIL
STATE OF CALIFORNIA

JAN 12 2010

REVISIONS

NO.	DATE	DESCRIPTION	INITIAL
1	11/24/09	90% CD	FC
2	12/24/09	100% CD	FC
3	01/05/10	100% CD	EN

FOR CONSTRUCTION

SHEET TITLE
SITE PLAN

SHEET NUMBER
A-1

NOTE:
THESE AZIMUTHS ARE PRELIMINARY AND SUBJECT TO CHANGE BY THE CLEARWIRE RF ENGINEER.

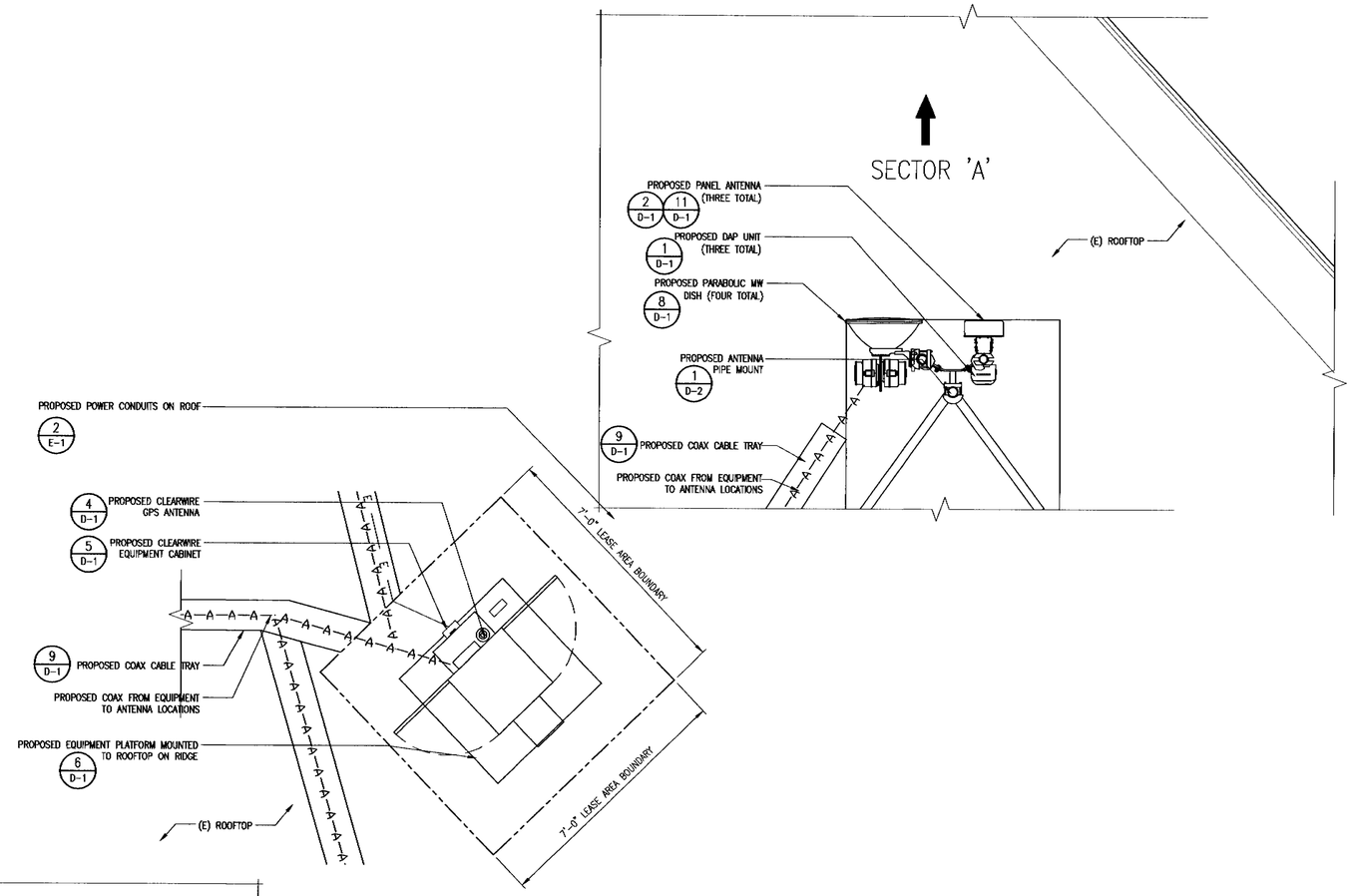

ENLARGED SITE PLAN

SCALE: 1/2"=1'-0" 0 1' 2'

1

THE INFORMATION CONTAINED IN THIS SET OF CONSTRUCTION DOCUMENTS IS PROPRIETARY BY NATURE. ANY USE OR DISCLOSURE OTHER THAN THAT WHICH RELATES TO CARRIER SERVICES IS STRICTLY PROHIBITED.

clear
4400 CARILLON POINT
KIRKLAND, WA 98033

NSA Wireless, Inc.
Site Acquisition • Planning • Construction Management • Site Modification
Bishop Ranch 15 1st Floor
12647 Alcosta Blvd. Suite 110
San Ramon, CA 94583
(925) 244-1890 OFFICE

CDG
CONNELL DESIGN GROUP, LLC
CONSULTING CIVIL ENGINEERS
4985 MACARTHUR COURT, SUITE 480, NEWPORT BEACH, CA 92660
(949) 753-8867 OFFICE - (949) 753-8833 FAX

CA-SJC0224D

CHUCK E CHEESE
2445 FONTAINE RD
SAN JOSE, CA 95121

REGISTERED PROFESSIONAL ENGINEER
DANIEL MICHAEL CONNELL
No. 62543
Expires 12/31/11
CIVIL
STATE OF CALIFORNIA

JAN 12 2010

REVISIONS

NO.	DATE	DESCRIPTION	INITIAL
1	11/24/09	90% CD	FC
2	12/24/09	100% CD	FC
3	01/05/10	100% CD	EN

FOR CONSTRUCTION

SHEET TITLE
ENLARGED SITE PLAN

SHEET NUMBER
A-2

NOTE:
THESE ELEVATIONS ARE DRAWN WITHOUT
THE BENEFIT OF A SURVEY, HEIGHTS TO BE VERIFIED

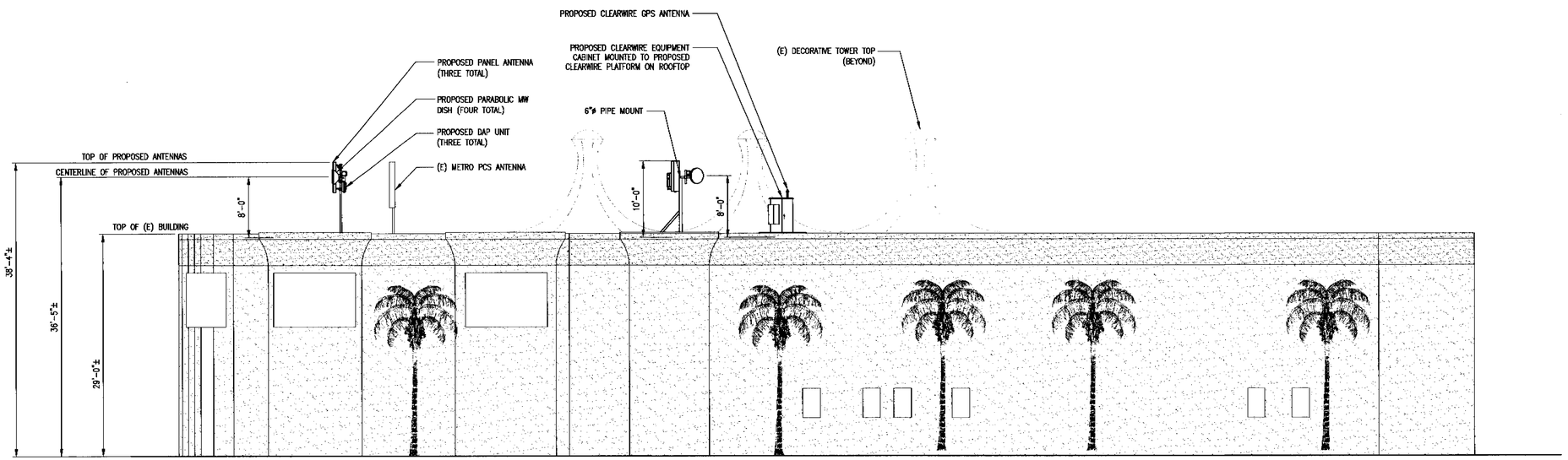

SOUTHEAST ELEVATION

SCALE: 1/8"=1'-0" 0 4' 8'

2

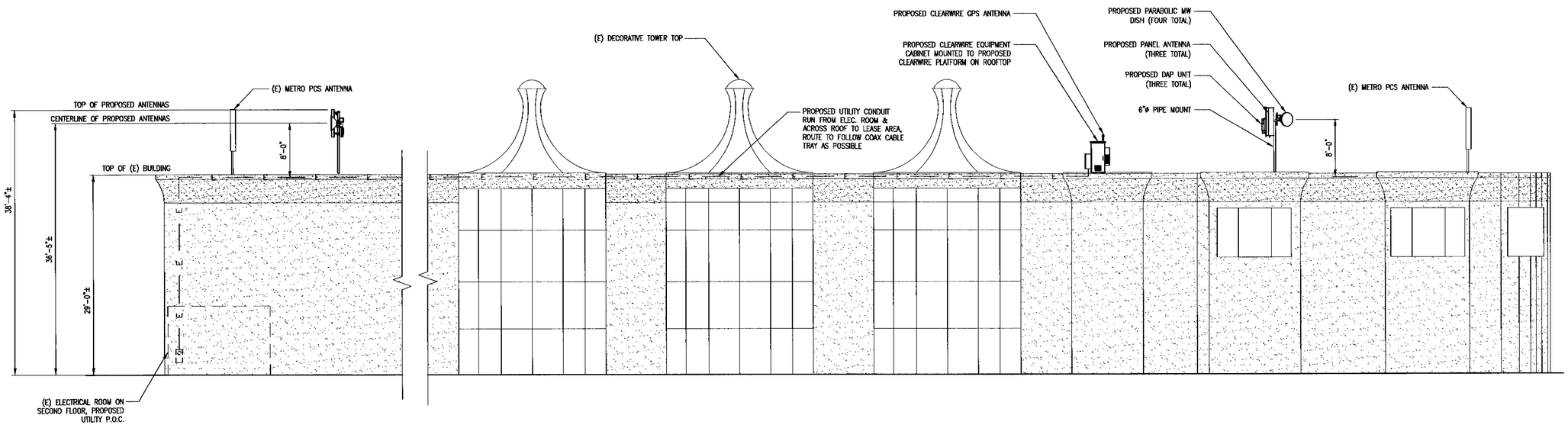

WEST ELEVATION

SCALE: 1/8"=1'-0" 0 4' 8'

1

THE INFORMATION CONTAINED IN THIS SET OF CONSTRUCTION DOCUMENTS IS PROPRIETARY BY NATURE. ANY USE OR DISCLOSURE OTHER THAN THAT WHICH RELATES TO CARRIER SERVICES IS STRICTLY PROHIBITED.

clear
4400 CARILLON POINT
KIRKLAND, WA 98033

NSA Wireless, Inc.
Site Acquisition · Planning · Construction Management · Site Modifications
Bishop Ranch 15 1st Floor
10647 Alcosta Blvd. Suite 110
San Ramon, CA 94583
(925) 244-1060 OFFICE

CDG
CONNELL DESIGN GROUP, LLC
CONSULTING CIVIL ENGINEERS
4685 MACARTHUR COURT, SUITE 400, NEWPORT BEACH, CA 92660
(949) 753-8807 OFFICE · (949) 753-8833 FAX

CA-SJC0224D

CHUCK E CHEESE
2445 FONTAINE RD
SAN JOSE, CA 95121

REGISTERED PROFESSIONAL ENGINEER
DANIEL MICHAEL CONNELL
No. 62543
Expires 12/31/11
CIVIL
STATE OF CALIFORNIA

JAN 12 2010

REVISIONS

NO.	DATE	DESCRIPTION	INITIAL
1	11/24/09	90% CD	FC
2	12/24/09	100% CD	FC
3	01/05/10	100% CD	EN

FOR CONSTRUCTION

SHEET TITLE
ELEVATIONS

SHEET NUMBER
A-3

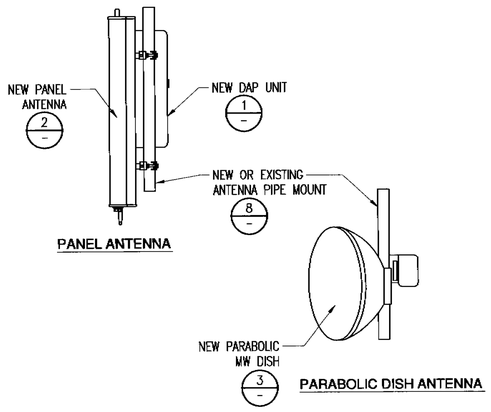

NOTICE: ANTENNA LAYOUT — SCALE: NONE — 10

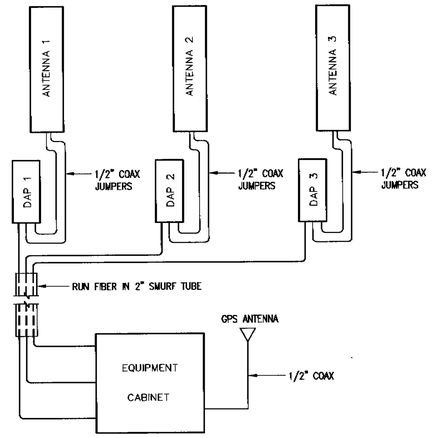

ANTENNA CABLING DIAGRAM — SCALE: NONE — 7

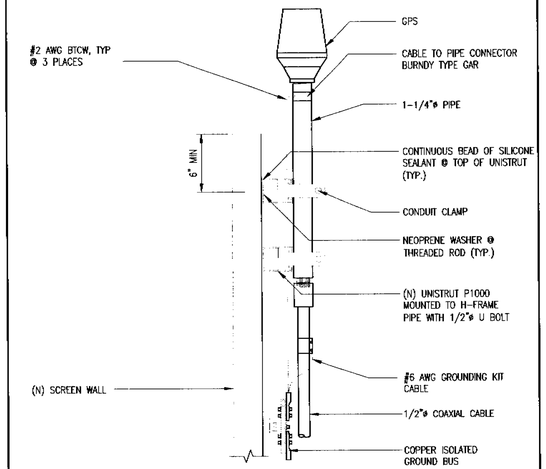

GPS ANTENNA ON SCREEN WALL — SCALE: NONE — 4

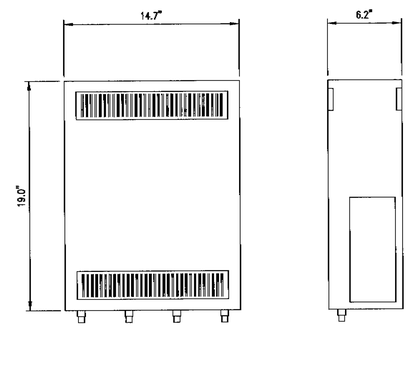

DAP UNIT DETAIL — SCALE: NONE — 1

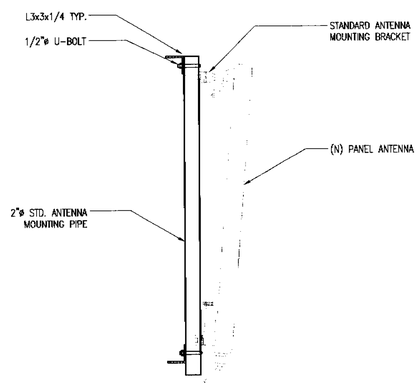

ANTENNA MOUNTING DETAIL — SCALE: NONE — 11

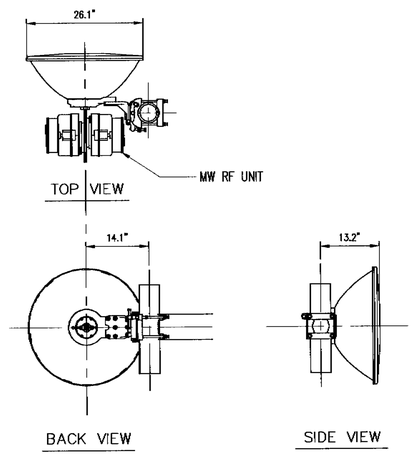

PARABOLIC DISH DETAIL — SCALE: NONE — 8

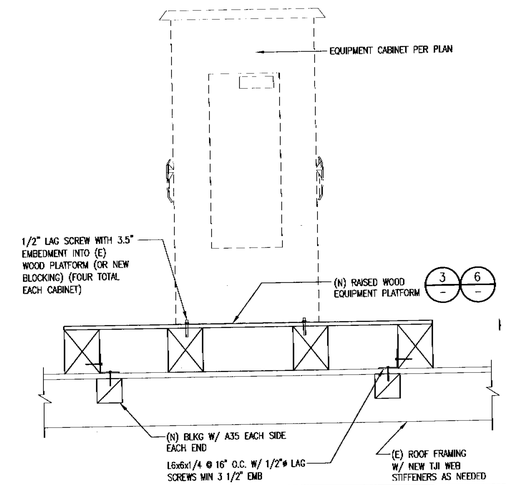

CABINET AT (N) WOOD PLATFORM — SCALE: NONE — 5

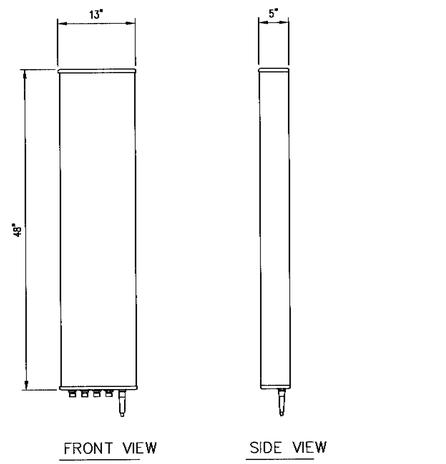

PANEL ANTENNA DETAIL — SCALE: NONE — 2

UN-USED — SCALE: NONE — 12

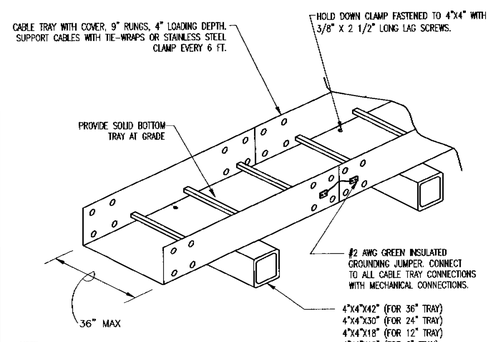

NOTE:
1. RUN #2 AWG BCW GROUND CONDUCTOR ALONG CABLE TRAY PER ELEC. AND GROUND AT BOTH ENDS.

2. CABLE TRAYS SHALL BE FREE OF SHARP OBJECTS AND BURRS WHICH COULD INJURE CABLES. COVERS SHALL BE FASTENED USING HOLD DOWN CLIPS. SHEET METAL SCREWS ARE NOT ACCEPTABLE.

CABLE TRAY — SCALE: NONE — 9

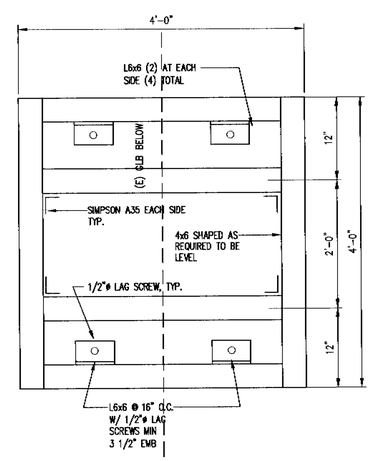

PLATFORM WATERPROOFING — SCALE: NONE — 6

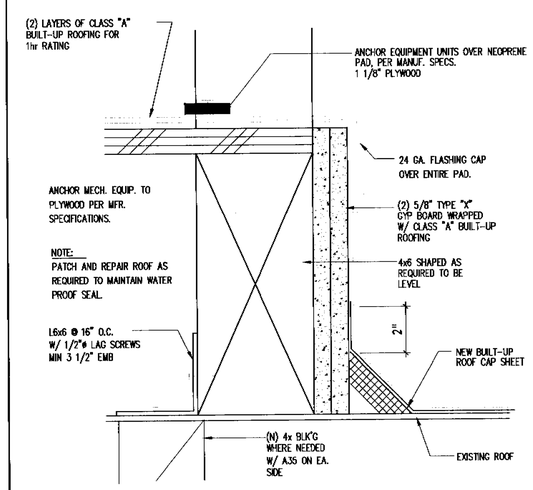

NOTE:
PATCH AND REPAIR ROOF AS REQUIRED TO MAINTAIN WATER PROOF SEAL.

PLATFORM WATERPROOFING — SCALE: NONE — 3

THE INFORMATION CONTAINED IN THIS SET OF CONSTRUCTION DOCUMENTS IS PROPRIETARY BY NATURE. ANY USE OR DISCLOSURE OTHER THAN THAT WHICH RELATES TO CARRIER SERVICES IS STRICTLY PROHIBITED.

clear
4400 CARILLON POINT
KIRKLAND, WA 98033

NSA Wireless, Inc.
Site Acquisition · Planning · Construction Management · Site Modifications
Bishop Ranch 15 1st Floor
12657 Alcosta Blvd., Suite 110
San Ramon, CA 94583
(925) 244-1890 OFFICE

CDG
CONNELL DESIGN GROUP, LLC
CONSULTING CIVIL ENGINEERS
4085 MACARTHUR COURT, SUITE 400, NEWPORT BEACH, CA 92660
(949) 753-8807 OFFICE · (949) 753-8833 FAX

CA-SJC0224D
CHUCK E CHEESE
2445 FONTAINE RD
SAN JOSE, CA 95121

REGISTERED PROFESSIONAL ENGINEER
CORNELL MICHAEL CONNELL
No. 62543
Expires 12/31/11
CIVIL
STATE OF CALIFORNIA

JAN 12 2010

REVISIONS			
NO.	DATE	DESCRIPTION	INITIAL
1	11/24/09	90% CD	FC
2	12/24/09	100% CD	FC
3	01/05/10	100% CD	EN

FOR CONSTRUCTION

SHEET TITLE
ANTENNA DETAILS

SHEET NUMBER
D-1

NOT USED — SCALE: NONE — 5

UN-USED — SCALE: NONE — 2

UN-USED — SCALE: NONE — 6

UN-USED — SCALE: NONE — 3

UN-USED — SCALE: NONE — 7

UN-USED — SCALE: NONE — 4

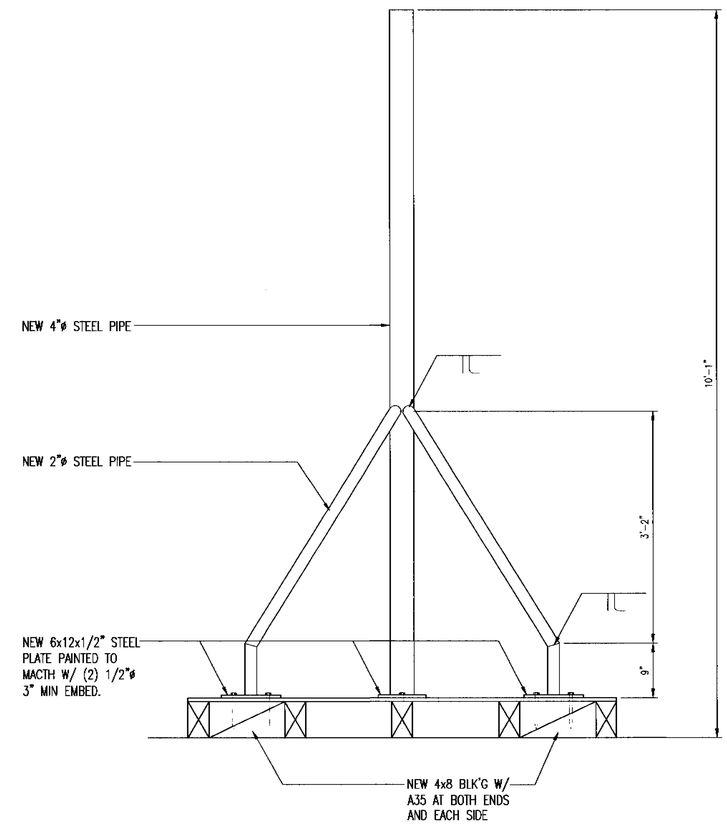

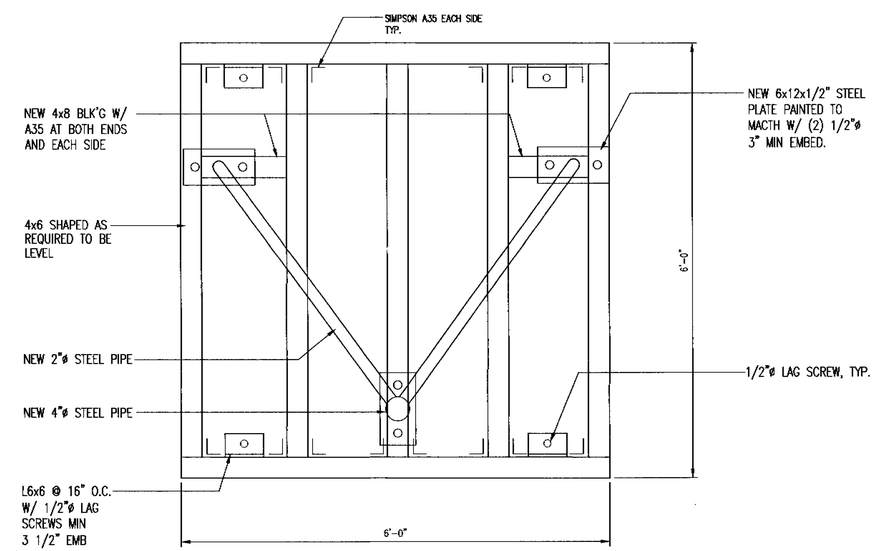

ANTENNA MOUNT — SCALE: NONE — 1

THE INFORMATION CONTAINED IN THIS SET OF CONSTRUCTION DOCUMENTS IS PROPRIETARY BY NATURE. ANY USE OR DISCLOSURE OTHER THAN THAT WHICH RELATES TO CARRIER SERVICES IS STRICTLY PROHIBITED.

clear
4400 CARILLON POINT
KIRKLAND, WA 98033

NSA Wireless, Inc.
Site Acquisition · Planning · Construction Management · Site Maintenance
Bishop Ranch 15 1st Floor
12657 Alcosta Blvd., Suite 110
San Ramon, CA 94583
(925) 244-1890 OFFICE

CONNELL DESIGN GROUP, LLC
CONSULTING CIVIL ENGINEERS
4085 MACARTHUR COURT, SUITE 400 NEWPORT BEACH, CA 92660
(949) 753-8807 OFFICE · (949) 753-8833 FAX

CA-SJC0224D

CHUCK E CHEESE
2445 FONTAINE RD
SAN JOSE, CA 95121

REGISTERED PROFESSIONAL ENGINEER
DANIEL MICHAEL CONNELL
No. 62543
Expires 12/31/11
CIVIL
STATE OF CALIFORNIA

JAN 12 2010

REVISIONS

NO.	DATE	DESCRIPTION	INITIAL
1	11/24/09	90% CD	FC
2	12/24/09	100% CD	FC
3	01/05/10	100% CD	EN

FOR CONSTRUCTION

SHEET TITLE
DETAILS

SHEET NUMBER
D-2

KEY NOTE

1 CONTRACTOR TO INSTALL A (N) CB, 240V, 2P/50A ON PANEL 'F'. A.I.C. SHOULD MATCH WITH (E) CBS

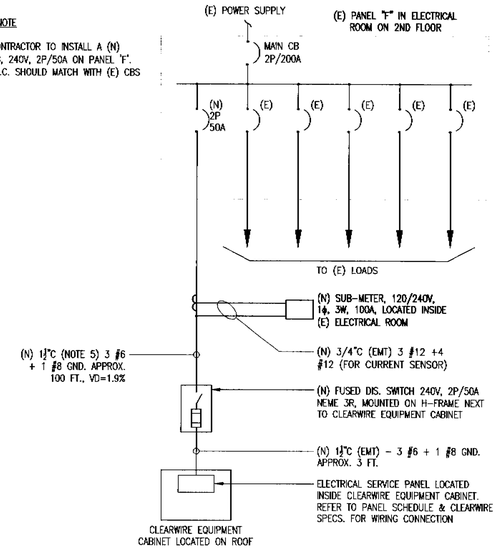

SINGLE LINE DIAGRAM NOTES:

1. SERVICE POWER SHALL BE 100A, 120/240V, 1ϕ, 3W.
2. FOR COMPLETE INTERNAL WIRING AND ARRANGEMENTS, REFER TO CABINET SPECIFICATIONS.
3. PROVIDE A MIN. 36" WORK CLEARANCE IN FRONT OF PANELS AND SERVICE EQUIPMENT.
4. ALL WIRING SHALL BE TYPE THHN, CU, 75°C
5. CONDUIT REQUIREMENTS (TYP., U.N.O.):
   A. UNDERGROUND: PVC (SCH. 40 OR SCH. 80).
   B. INDOOR: EMT (RGS IN TRAFFIC AREAS).
   C. OUTDOOR (ABOVE GRADE): RGS

ELECTRICAL SINGLE LINE DIAGRAM

SCALE: NONE | 6

1. SITE EXAMINATION: BIDDERS ARE URGED TO VISIT THE JOB SITE TO MAKE HIMSELF/HERSELF THOROUGHLY FAMILIAR WITH THE EXISTING CONDITIONS, AND THE EXTENT OF WORK TO BE DONE BEFORE SUBMITTING BID. ANY DISCREPANCIES SHALL BE BROUGHT TO THE ATTENTION OF THE ENGINEER.

2. DESCRIPTION OF WORK: THE SCOPE OF WORK COVERED BY THIS SECTION CONSISTS OF PROVIDING ALL LABOR, EQUIPMENT, MATERIALS, AND SUPERVISIONS TO COMPLETE THE CONSTRUCTION OF ELECTRICAL MODIFICATIONS IN ACCORDANCE WITH THIS SPECIFICATIONS AND DRAWINGS.

3. FEES, PERMITS, AND LICENSES: FEES, PERMITS, AND LICENSES REQUIRED BY THE LEGALLY CONSTITUTED AUTHORITIES FOR THE INSTALLATION OF THE WORK ACCORDING TO THE DRAWINGS AND SPECIFICATIONS SHALL BE OBTAINED AND PAID FOR BY THIS CONTRACTOR WHO SHALL DELIVER THE ABOVE MENTIONED CERTIFICATES TO THE OWNER.

4. GUARANTEES: ALL MATERIALS AND EQUIPMENT FURNISHED AND INSTALLED UNDER THIS CONTRACT SHALL BE NEW FREE FROM ALL DEFECTS, SHALL BE LISTED, LABELED, OR CERTIFIED FOR ITS USE BY A NATIONAL RECOGNIZED TESTING LABORATORY, AND CONFORM TO NEMA, NEC, AND AIEE STANDARDS. THE CONTRACTOR SHALL GUARANTEE THE ENTIRE WORK FOR A PERIOD OF ONE (1) YEAR AFTER FINAL ACCEPTANCE TO AGAINST ANY DEFECTS AND MALFUNCTIONS OF THE SYSTEMS. IF DURING THIS PERIOD ANY MATERIAL, EQUIPMENT, OR ANY PART OF THE SYSTEMS FAIL TO FUNCTION PROPERLY, THE CONTRACTOR SHALL MAKE CORRECTION WITHOUT ANY EXPENSE TO THE OWNER.

5. RECORD DRAWINGS: THE CONTRACTOR SHALL PROVIDE AND KEEP UP-TO-DATE A COMPLETE "AS-BUILT" RECORD SET OF BLUEPRINTS WHICH SHALL SHOW EVERY CHANGE FROM THE ORIGINAL DRAWINGS AND THE EXACT "AS-BUILT" LOCATIONS AND SIZES OF THIS TRADE. UPON COMPLETION OF THE WORK, THIS SET OF PRINTS SHALL BE DELIVERED TO THE OWNER.

6. EXISTING CONDITIONS: ALL EXISTING CONDITIONS SHOWN ON THE DRAWINGS ARE FIELD SURVEY INFORMATION FURNISHED BY OWNER'S SURVEY CREW WHICH MAY NOT REFLECT THE EXACT AS-BUILT CONDITIONS CONTRACTOR SHALL INCLUDE IN HIS BID TO PERFORM FIELD INVESTIGATIONS AS NECESSARY TO PINPOINT THE EXACT LOCATIONS OF DEVICES, CIRCUIT BREAKERS, AND CONDUIT HOMERUNS AS REQUIRED FOR MAKING NEW CONSTRUCTION.

7. DEMOLITION: REMOVE EXISTING ELECTRICAL/TELEPHONE/DATA CABLE DEVICES THAT ARE AFFECTED BY THE DEMOLITION OF WALLS, CEILING, ETC., AND THAT ARE INTERFERED WITH NEW CONSTRUCTION WORK. EXTEND ANY INTERRUPTED CIRCUITS TO THE DEVICES WHICH REMAINING IN SERVICE. CLEAN ALL REMOVED ITEMS THAT ARE TO BE RE-USED BEFORE INSTALLING.

8. IDENTIFICATIONS: COMPLETE IDENTIFICATION OF PROJECT ELECTRICAL COMPONENTS IS REQUIRED. INSTALL TYPEWRITTEN DIRECTORIES OF ALL CIRCUITS ON INSIDE OF PANELS.

9. RECEPTACLES: RECEPTACLES SHALL BE SPECIFICATION GRADE, GROUNDING TYPE, 3 POLE, 2 WIRE AND POLARIZED, MOUNTING HEIGHT SHALL BE AS INDICATED. RECEPTACLES SHALL HAVE THEIR SERVING PANELS AND CIRCUIT NUMBERS PERMANENTLY MARKED ON PLATES.

10. BOXES: JUNCTION BOXES AND PULL BOXES SHALL BE OF CODE GAUGE AND OF THE REQUIRED SIZE TO ACCOMMODATE NUMBER OF CONDUCTORS SHOWN. FOR INTERIOR DRY LOCATIONS, BOXES SHALL BE GALVANIZED ONE-PIECE, DRAWN STEEL, KNOCKOUT TYPE, WITH REMOVABLE MACHINE SCREW SECURED COVERS. ALL REQUIRED CONDUIT BENDS, FITTINGS, BOXES, AND ETC. WHETHER SHOWN OR NOT SHALL BE PROVIDED TO MEET ALL CODES AND STANDARDS REQUIREMENTS.

11. CIRCUIT BREAKERS: CIRCUIT BREAKERS SHALL BE QUICK MAKE, QUICK BREAK, MOLDED CASE, BOLT-ON TYPE DESIGNED FOR ELECTRICAL SERVICES AS INDICATED WITH MINIMUM 10,000 AMPERES RMS SHORT CIRCUIT RATING, UNLESS NOTED OTHERWISE. WHERE NEW CIRCUITS ARE SHOWN TO EXISTING PANELS,
12. PROVIDE NEW BREAKERS AS INDICATED.

CONDUIT: UNLESS NOTED OTHERWISE, USE RIGID GALVANIZED STEEL CONDUIT FOR ALL SIZES 2 1/2" AND LARGER THAT ARE INSTALLED ABOVE GRADE OR SUBJECT TO MECHANICAL INJURY. USE ELECTRICAL METALLIC TUBING FOR TRADE SIZES OF 1/2" TO 2" INCLUSIVE IN ALL DRY LOCATIONS, EXCEPT WHERE RIGID METALLIC CONDUIT IS REQUIRED OR INDICATED. USE FLEXIBLE STEEL CONDUIT IN AREAS WHERE INSTALLATION OF EMT AND RIGID CONDUITS ARE NOT PRACTICAL, OR WHERE MOVEMENT OF THE ITEM IS REQUIRED DUE TO VIBRATIONS OR FOR MAINTENANCE. FLEXIBLE CONDUIT SHALL NOT EXCEED 6 FEET IN LENGTH. CONDUIT ABOVE CEILING SHALL BE SELF-SUPPORTING AND IN NO WAY SUPPORT BY LIGHTING FIXTURE AND CEILING. ALL ROUTES OF CONDUITS AS SHOWN ON DRAWINGS ARE DIAGRAMMATIC. CONTRACTOR TO FIELD VERIFY EXACT ROUTING. RUN ALL CONDUITS CONCEALED IN WALLS, BELOW
13. SLAB, OR ABOVE CEILING EXCEPT WHERE OTHERWISE INDICATED.

CONDUCTORS: ALL CONDUCTORS SHALL BE SOFT-DRAWN ANNEALED COPPER, 98% CONDUCTIVITY, STRANDED, WITH 600 VOLT INSULATION. #12 AWG SHALL BE THE MINIMUM WIRE SIZE ALLOWED.
14. CONDUCTORS SHALL HAVE THWN OR THHN INSULATION AS APPLICABLE. COLOR CODE ALL WIRING.

OPERATIONAL TESTS: UPON COMPLETION OF ALL THE INSTALLATION, THE CONTRACTOR SHALL CONDUIT AN OPERATING TEST IN THE PRESENCE OF THE OWNER OR THE OWNER'S REPRESENTATIVES TO ADJUST AND TEST ALL ELECTRICAL ITEMS AND SYSTEMS TO INSURE ALL THE ELECTRICAL ITEMS AND SYSTEMS IN A SATISFACTORY OPERATING CONDITION. ITEM IN NEED OF CORRECTIONS AND DISCOVERED DEFECTS DURING SUCH TESTING SHALL BE IMMEDIATELY REPAIRED THEN BE RETESTED. ALL SUCH REPAIR OR REPLACEMENT SHALL BE DONE AT NO COST TO THE OWNER.

NOTE:
UTILITY PLAN IS PRELIMINARY PENDING RECEIPT OF LOCAL UTILITY PLANNER DESIGN.

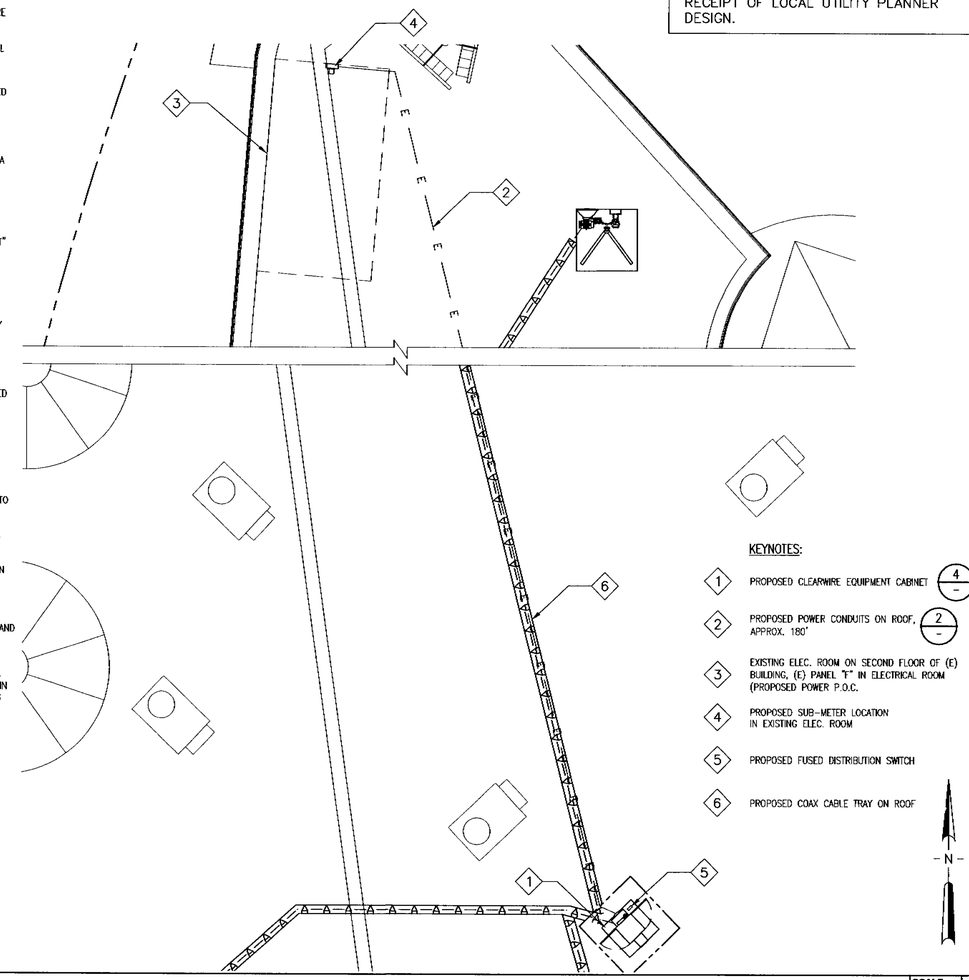

KEYNOTES:

1. PROPOSED CLEARWIRE EQUIPMENT CABINET (4)
2. PROPOSED POWER CONDUITS ON ROOF, APPROX. 180' (2)
3. EXISTING ELEC. ROOM ON SECOND FLOOR OF (E) BUILDING, (E) PANEL "F" IN ELECTRICAL ROOM (PROPOSED POWER P.O.C.
4. PROPOSED SUB-METER LOCATION IN EXISTING ELEC. ROOM
5. PROPOSED FUSED DISTRIBUTION SWITCH
6. PROPOSED COAX CABLE TRAY ON ROOF

ELECTRICAL SITE PLAN, SPECIFICATIONS

SCALE: XX=1'-0" | 1

PANEL "A"–120/240V 1ϕ 3W, MAIN 30 AMPS, BUSSING 125 AMPS, AIC=10KA

DESCRIPTION	AMPS	POLE	NO.	LOAD 1	LOAD 2	NO.	POLE	AMPS	DESCRIPTION
RECTIFIER	30	2	1	2400		2	2	100	RECTIFIER
–	–	–	3		2400	4	–	–	–
HVAC	20	2	5	480		6	2	30	GENERATOR RECEPTACLE
–	–	–	7		480	8	–	–	–
RECEPTACLE	20	1	9	180		10			
SPACE			11			12			
LOAD PER PHASE				3060	2880				

CONNECTED LOAD : 5940 VA
25% LCL : 1440 VA
TOTAL LOAD : 7380 VA
TOTAL AMPS : 30.75 A

NOTE:
CKT 2, 4 AND 6, 8 IS MECHANICALLY INTERLOCKED

PANEL SCHEDULE

SCALE: NONE | 7

NOT USED

SCALE: NONE | 4

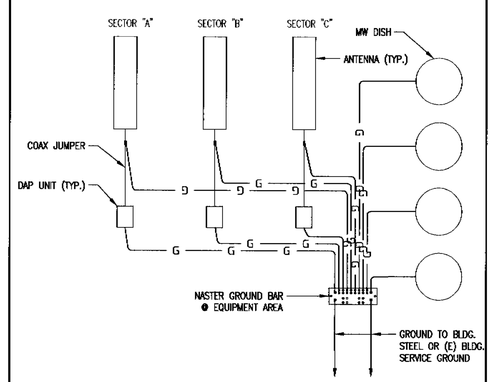

ANTENNA GROUNDING

SCALE: NONE | 3

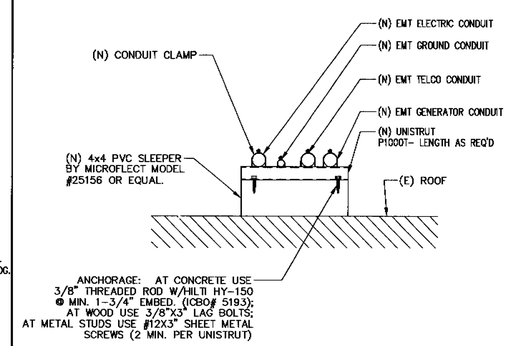

UTILITY CONDUIT TRENCH

SCALE: NONE | 2

THE INFORMATION CONTAINED IN THIS SET OF CONSTRUCTION DOCUMENTS IS PROPRIETARY BY NATURE. ANY USE OR DISCLOSURE OTHER THAN THAT WHICH RELATES TO CARRIER SERVICES IS STRICTLY PROHIBITED.

clear
4400 CARILLON POINT
KIRKLAND, WA 98033

NSA Wireless, Inc.
Site Acquisition • Planning • Construction Management • Site Modifications
Bishop Ranch 15 1st Floor
12667 Alcosta Blvd., Suite 110
San Ramon, CA 94583
(925) 244-1920 OFFICE

CDG
CONNELL DESIGN GROUP, LLC
CONSULTING CIVIL ENGINEERS
4685 MACARTHUR COURT, SUITE 450, NEWPORT BEACH, CA 92660
(949) 753-8807 OFFICE · (949) 753-8833 FAX

CA-SJC0224D

CHUCK E CHEESE
2445 FONTAINE RD
SAN JOSE, CA 95121

REGISTERED PROFESSIONAL ENGINEER · DANIEL MICHAEL COX · No. 18543 · Exp. 12/31/11 · CIVIL · STATE OF CALIFORNIA

JAN 12 2010

REVISIONS

NO.	DATE	DESCRIPTION	INITIAL
1	11/24/09	90% CD	FC
2	12/24/09	100% CD	FC
3	01/05/10	100% CD	EN

FOR CONSTRUCTION

SHEET TITLE
ELEC. DETAILS

SHEET NUMBER
E-1

1. ALL DETAILS ARE SHOWN IN GENERAL TERMS. ACTUAL GROUNDING INSTALLATION AND CONSTRUCTION MAY VARY DUE TO SITE SPECIFIC CONDITIONS.
2. GROUND ALL ANTENNA BASES, FRAMES, CABLE RUNS, AND OTHER METALLIC COMPONENTS USING #2 GROUND WIRES AND CONNECT TO SURFACE MOUNTED GROUND BUS BARS AS SHOWN. FOLLOW ANTENNA AND BTS MANUFACTURER'S PRACTICES FOR GROUNDING REQUIREMENTS. GROUND COAX SHIELD AT BOTH ENDS USING MANUFACTURES PRACTICES. ALL U/G WATER PIPES, METAL CONDUITS AND GROUNDS THAT ARE A PART OF THIS SYSTEM SHALL BE BONDED TOGETHER.
3. ALL GROUND CONNECTIONS SHALL BE #2 AWG U.O.N. ALL WIRES SHALL BE COPPER THHN/THWN. ALL GROUND WIRE SHALL BE TIN COATED OR GREEN INSULATED WIRE.
4. VERIFY AND TEST GROUND TO SOURCE TO A RANGE OF 5 TO 10 OHMS MAXIMUM. PROVIDE SUPPLEMENT GROUNDING RODS AS REQUIRED TO ACHIEVE SPECIFIED OHMS READING. BE RESPONSIBLE TO PROVIDE GROUND CONDUCTOR FROM THE ANTENNA TO GROUNDING POINT. GROUNDING AND OTHER OPTIONAL TESTING WILL BE WITNESSED BY THE CLEARWIRE REPRESENTATIVE.
5. NOTIFY ARCHITECT/ENGINEER IF THERE ARE ANY DIFFICULTIES INSTALLING GROUNDING SYSTEM DUE TO SITE SOIL CONDITIONS.
6. BARE GROUNDING CONDUCTOR SHALL BE HARD DRAWN TINNED COPPER SIZES AS NOTED ON PLAN.
7. ALL HORIZONTALLY RUN GROUNDING CONDUCTORS SHALL BE INSTALLED MINIMUM 30" BELOW GRADE IN TRENCH, U.O.N., AND BACK FILL SHALL BE COMPACTED.
8. AS POSSIBLE, WITH A MINIMUM 12" BENDING RADIUS NOT LESS THAN 90°.
9. ALL SUPPORT STRUCTURES, CABLE CHANNEL WAYS OR WIRE GUIDES SHALL BE BONDED TO GROUND SYSTEM AT A POINT NEAREST THE MAIN GROUNDING BUS "MGB" WITH A MINIMUM NO. 2 TINNED COPPER CONDUCTOR AND (2)-HOLE COMPRESSION CONNECTOR AT BUS.
10. PROVIDE 'BURNDY' CRIMP-ON SYSTEM CONNECTORS AND ANTENNA PLATE CONNECTORS AT ANTENNA GROUND CONDUCTOR CONNECTIONS.
11. HAVE A COATING OF "KOPR-SHIELD" OR "NO-OX-ID" APPLIED TO THE CONNECTION.
12. ALL BOLTED CONNECTION HARDWARE AT EQUIPMENT SHALL BE TYPE 316 SS, OR DRIVEN BRONZE WITH "KOPR-SHIELD" OR "NO-OX-ID" APPLIED TO THE CONNECTION.

LEGEND

- ● MECHANICAL CONNECTION
- ■ EXOTHERMIC WELD (CADWELD/THERMOWELD) CONNECTION.
- —G— #2 AWG INSULATED, COPPER WIRE (UNLESS OTHERWISE SPECIFIED).

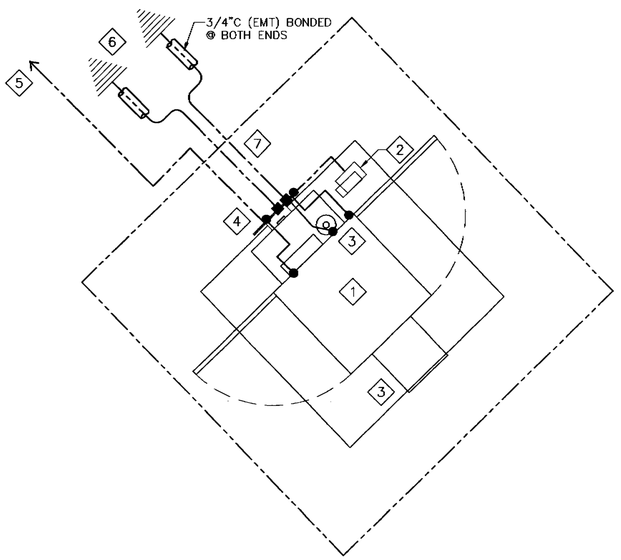

1. (N) CLEARWIRE EQUIPMENT CABINETS
2. FUSED DIS. SWITCH
3. GPS ANTENNA
4. MASTER GROUND BUS BAR @ EQUIPMENT
5. #2 AWG INSULATED COPPER GROUND WIRE TO ANTENNA GROUND BUS BAR AT LEASE AREA. (FOLLOW COAX ROUTING)
6. #2 AWG COPPER GROUND WIRE TO (E) BUILDING STEEL OR (E) BUILDING SERVICE GROUND
7. #2 AWG INSULATED COPPER GROUND WIRE

GROUNDING PLAN — SCALE: NONE — 7

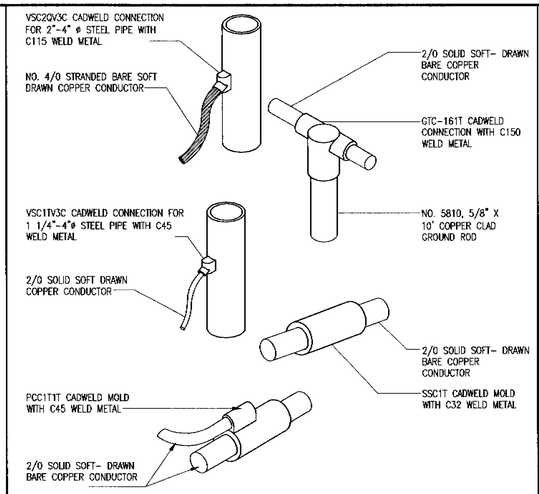

CADWELD CONNECTION DETAILS — SCALE: NONE — 4

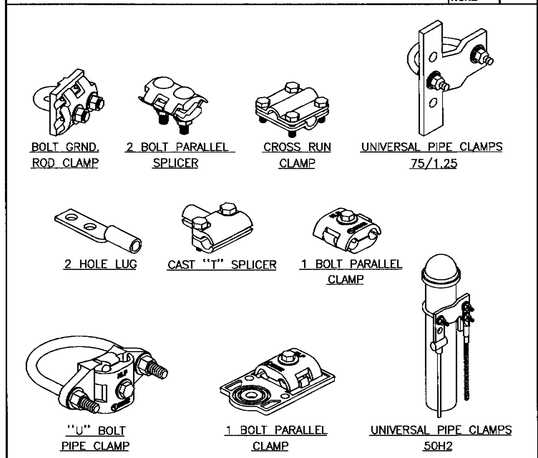

MECHANICAL CONNECTION DETAILS — SCALE: NONE — 5

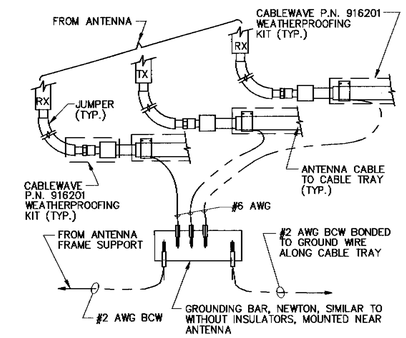

COAX CABLE GROUNDING — SCALE: NONE — 1

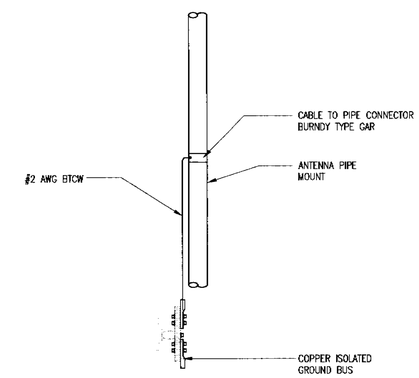

PIPE MOUNT GROUNDING — SCALE: NONE — 2

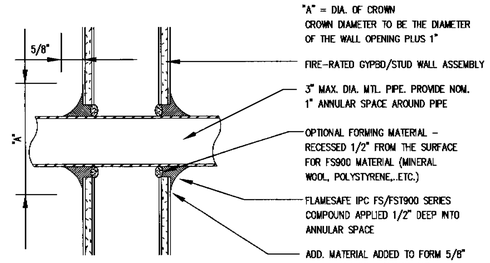

FRAMED WALL PENETRATION

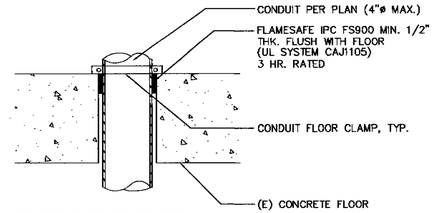

CONCRETE FLOOR PENETRATION

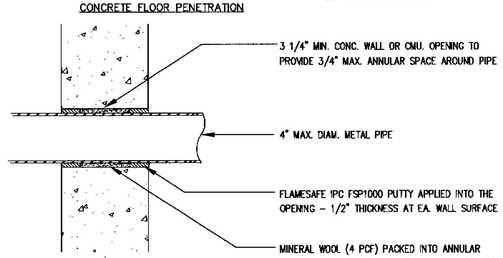

CONCRETE WALL PENETRATION

NOTE:

1. ALL PENETRATIONS SHALL CONFORM TO TITLE 24, CALIF. BLDG. CODE, SECTION 714.
2. PENETRATIONS THRU WALLS SHALL COMPLY WITH T24, CBC SECTION 709.6.
   - F RATING – PENETRATIONS 4" OR LESS
   - T RATING – PENETRATIONS LARGER THAN 4", PENETRATIONS CORRIDOR CLGS. WHICH ARE NOT RATED, BELOW ANY CLG.
4. PENETRATIONS THRU FLOORS/ CEILINGS SHALL COMPLY WITH T24, CBC SECTION 710.3.
   - F RATING – PENETRATIONS 4" OR LESS
   - T RATING – PENETRATIONS LARGER THAN 4", PENETRATIONS NOT CONTAINED W/IN A WALL.

PENETRATION FIRE STOPPING — SCALE: NONE — 8

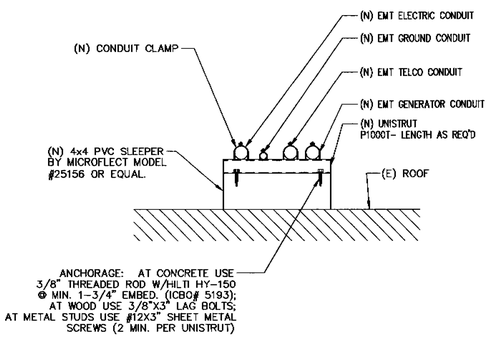

ROOF MOUNTED CONDUIT — SCALE: NONE — 6

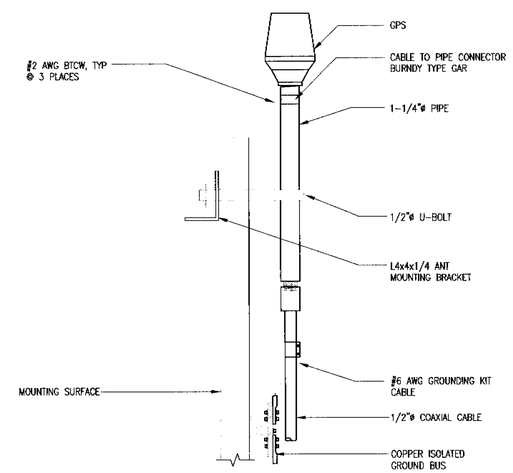

GPS ANTENNA GROUNDING — SCALE: NONE — 3

THE INFORMATION CONTAINED IN THIS SET OF CONSTRUCTION DOCUMENTS IS PROPRIETARY BY NATURE. ANY USE OR DISCLOSURE OTHER THAN THAT WHICH RELATES TO CARRIER SERVICES IS STRICTLY PROHIBITED.

clear
4400 CARILLON POINT
KIRKLAND, WA 98033

NSA Wireless, Inc.
Site Acquisition · Planning · Construction Management · Site Modifications
Bishop Ranch 15 1st Floor
12667 Alcosta Blvd., Suite 110
San Ramon, CA 94583
(925) 244-1890 OFFICE

CDG
CONNELL DESIGN GROUP, LLC
CONSULTING CIVIL ENGINEERS
4685 MACARTHUR COURT, SUITE 400, NEWPORT BEACH, CA 92660
(949) 753-8867 OFFICE · (949) 753-8833 FAX

CA-SJC0224D

CHUCK E CHEESE
2445 FONTAINE RD
SAN JOSE, CA 95121

REGISTERED PROFESSIONAL ENGINEER — DANIEL MICHAEL CONNELL — No. 62543 — Expires 12/31/11 — CIVIL — STATE OF CALIFORNIA

JAN 12 2010

REVISIONS

NO.	DATE	DESCRIPTION	INITIAL
1	11/24/09	90% CD	FC
2	12/24/09	100% CD	FC
3	01/05/10	100% CD	EN

FOR CONSTRUCTION

SHEET TITLE
ELEC. DETAILS

SHEET NUMBER
E-2