9 6 7 2 2 6 0

9672760

P L A C E

Address Key

3 8 5 8 9

Sub Doc Type

B L

Number LG Docs

0 0 5 3

Permit Key

8 6 2 4 8

Street #

2 5 0

Street Dir

N

Doc Type

P L

Trade

B

Suite

Street Name

B A S C O M

Street Type

A V

Tract Number

Document Date

8/20/96

	Prepped By	Scanned By	Indexed By	Verified By
Initials	Shirley H	Olga		
Date	10-23-01	10.23.01.		

STRUCTURAL NOTES

1. DEFERRED SUBMITTALS FOR THIS PROJECT INCLUDE ROOF TRUSS SHOP DRAWINGS.

2. THE ARCHITECT OF RECORD, "EDWIN BRUCE ASSOCIATES", SHALL REVIEW THE DEFERRED SUBMITTALS AND PROVIDE A LETTER TO THE BUILDING DEPARTMENT STATING THAT THEY ARE FOUND TO BE IN GENERAL CONFORMANCE WITH THE DESIGN OF THE BUILDING. SECTION 106.3.4.2.

3. PRIOR TO FABRICATION OF ROOF TRUSSES, THE FOLLOWING MATERIAL BEARING THE APPROVAL OF THE DESIGNER SHALL BE SUBMITTED TO THE BUILDING DEPARTMENT FOR REVIEW:

   A. TWO SETS OF SHOP DRAWINGS.
   B. TWO LAYOUT PLANS DELINEATING LOCATION OF TRUSSES.
   C. ONE SET OF DESIGN CALCULATIONS SHOWING:
      1. AXIAL AND BENDING STRESSES.
      2. JOINT DESIGN.

4. THE SOILS ENGINEER SHALL BE RETAINED TO PROVIDE OBSERVATION AND TESTING SERVICES DURING THE GRADING AND FOUNDATION PHASES OF CONSTRUCTION PER SOILS REPORT RECOMMENDATIONS. SUBMIT INSPECTION AND TESTING REPORTS TO THE BUILDING DEPARTMENT PRIOR TO FINAL.

REQUIRED INSPECTIONS IN ADDITION TO BUILDING DIVISION INSPECTIONS

SPECIAL INSPECTION REQUIRED	( ) YES (✓) NO
SOILS ENGINEERING INSPECTION REQ'D	(✓) YES ( ) NO
COMPACTION REPORT REQ'D	(✓) YES ( ) NO
FLOOD ELEVATION CERT. REQ'D	( ) YES (✓) NO
PUBLIC WORKS INSPECTION REQ'D	(✓) YES ( ) NO
FIRE DEPT INSPECTION REQ'D	(✓) YES ( ) NO

COMMENTS

CITY OF SAN JOSE BUILDING DIVISION
APPROVED PLAN SET

(✓) OFFICE SET ( ) FIELD SET

ADDRESS 290 N. BASCOM AVE.
PERMIT No. B96-160 DATE 8/12/96
P.C. No. 96-093-23 DATE 8/12/96
CODE EDITIONS: UBC 94 NEC ___ ENERGY ___ DA ___
OCCUPANCY GROUP(S) A-3 TYPE OF CONSTRUCTION V-N

PLANS APPROVED FOR:	CHECKED BY	APPROVED BY
(✓) BUILDING/NON STRUCT	Kutzmann	M
(✓) BUILDING STRUCT	Kutzmann	M
(✓) ELECTRICAL	OK	OK
( ) PLUMBING		
( ) MECHANICAL		
(✓) FIRE	VF	VF
( ) OTHER		
( ) ZONING	PLANNING PERMIT # H95-10-078	

Plans under separate cover

COMMENTS

These documents have been reviewed by Kutzmann & Assoc. for general compliance with the requirements of the UBC & T-24 Energy & Disabled Access. Initial comments have been resolved and we take no further exceptions. This review shall in no way relieve the Engineer of Record of total responsibility for the design, detailing and specification of the project.

By: ____ Date: 8/7/96

SHEET INDEX

T-1	COVER SHEET
T-2	GENERAL NOTES / T-24
C-1	EXISTING TOPOGRAPHY / GRADING & DRAINAGE PLAN
C-2	COMPOSITE UTILITY PLAN / DETAILS
SD-1	SITE PLAN
SD-2	SITE DETAILS
L-1	LANDSCAPE PLAN
L-2	PLANT LIST/DETAILS
I-1	IRRIGATION PLAN
I-2	IRRIGATION DETAILS & NOTES
A-1	FLOOR PLAN / INTERIOR DETAILS
A-2	BUILDING ELEVATIONS
A-3	ROOF PLAN / DETAILS
A-4	REFLECTED CEILING PLAN
A-5	BUILDING CROSS SECTIONS
A-6	WALL SECTIONS / DETAILS
A-7	WALL SECTIONS / DETAILS
A-8	DOORS / WINDOWS / DETAILS
A-9	SEATING PLAN / SCHEDULES
A-10	ENLARGED REST. / CURB DET. / SERV. CNTR. & VAL SECT.
EQ-1	EQUIPMENT PLAN
EQ-2	EQUIPMENT SCHEDULE
EQ-3	HOOD SECTION & INFO.
S-1	FOUNDATION PLAN
S-2	FOUNDATION DETAILS
S-3	ROOF FRAMING PLAN
S-4.1	ROOF FRAMING DETAILS
S-4.2	ROOF FRAMING DETAILS
S-5	DECORATIVE ROOF PLAN
S-6	DECORATIVE ROOF DETAILS
S-7	DECORATIVE ROOF DETAILS
S-8	STRUCTURAL GENERAL NOTES
P-1	PLUMBING SITE PLAN
P-2	PLUMBING FLOOR PLAN
P-3	DETAILS / FIXTURE SCHEDULE
P-4	PLUMBING DIAGRAMS
M-1	MECH. FLOOR PLAN
M-2	MECH. ROOF PLAN / SCHEDULES
M-3	HOOD DETAILS
E-1	ELECTRICAL SHEET INDEX, SYMBOL LIST AND ABBREVIATIONS
E-2	ELECTRICAL SITE PLAN
E-3	ONE LINE POWER DIAGRAM, "MSB" ELEVATION AND SCHEDULE
E-4	FLOOR PLAN - LIGHTING AND FIXTURE SCHEDULE
E-5	FLOOR PLAN - POWER AND FIXTURE SCHEDULE
E-6	CONTROL DIAGRAMS AND NOTES
E-7	SPECIFICATIONS, DETAILS

CONSULTANTS

ARCHITECT :	EDWIN BRUCE ASSOCIATES ARCHITECTS A.I.A. 1625 THE ALAMEDA, SUITE 610 SAN JOSE, CA. 95126 PH. (408) 995-5701
CIVIL ENGINEERS :	MICHAEL D. ASHLEY CIVIL ENGINEERING 509 GEORGETOWN AVENUE SAN MATEO, CA. 94402 PH. (415) 341-2669
STRUCTURAL :	ALL STRUCTURAL, INC. 14499 BERCAW LANE SAN JOSE, CA. 95124 PH. (408) 559-0340
MECHANICAL / PLUMBING :	AMCON CONSULTANTS, INC. 2660 JOHN MONTGOMERY DRIVE SAN JOSE, CA. 95148 PH. (408) 272-8800
ELECTRICAL :	M. NEILS ENGINEERING 10 FULLERTON COURT SACRAMENTO, CA. 95825 PH. (916) 923-4400
LANDSCAPE ARCHITECTS:	BRANDEAU ASSOCIATES 1005 LAKEDALE WAY SUNNYVALE, CA. 94089 PH. (415) 967-6677
IRRIGATION :	I.S.C. GROUP 1799 PORTOLA LIVERMORE, CA. 94550 PH. (415) 813-1428

PLANNING DEPARTMENT FILE NUMBER : H95-10-078

KFC

LOCATION MAP

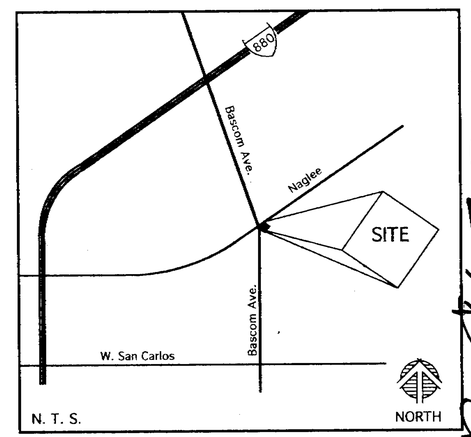

PROJECT DATA

SITE AREA:	20,266 Sq. ft.
GROSS BUILDING AREA:	2,840 Sq. ft. TOTAL BUILDING
NET BUILDING AREA:	3,053 Sq. ft. TOTAL BUILDING
OFF STREET PARKING:	26 UNIFORM SPACES 1 ACCESSIBLE SPACE 1 VAN ACCESSIBLE SPACE 28 TOTAL SPACES
SITE COVERAGE:	BUILDING - 15 % PARKING - 44 % LANDSCAPING - 41 %
TYPE OF CONSTRUCTION:	V - N
TENANT SPACE OCCUPANCY:	A - 3
ZONING:	C - 1
OCCUPANT LOAD:	66 SEATS IN DINING RM.
APPLICABLE CODE:	1996 STATE CODE
JURISDICTION:	SAN JOSE, CA.:
PARCEL NUMBER:	APN 274-21-34 & 274-21-35
FIRE SPRINKLERS:	HOODS ONLY

Received AUG 7 1996 Kutzmann & Assoc.

NOTE:
SELECTED LIST OF BIDDERS MAY PURCHASE BLUEPRINTS OF DRAWINGS FROM SAN JOSE BLUEPRINT @ (408) 295-5770

Copyright 1996
EDWIN BRUCE ASSOCIATES All designs, drawings, and written material appearing herein are protected and constitute original and unpublished work of the Architect and may not be copied, revised, re-used or disclosed without the written consent of the Architect. Equipment manufactured by others is excluded. Drawings and specifications are instruments of architectural service and shall remain the property of the Architect. Use is restricted to the site for which they were prepared.

BLD. DEPT. 7/30/96 (1)

EDWIN BRUCE Associates Architects A.I.A.
1625 The Alameda
Suite 610
San Jose, CA.
95126
Ph. 408/995 5701
Fax 408/995 5022

LICENSED ARCHITECT EDWIN G. BRUCE NO. C-14596 EXP. 5-31-98 STATE OF CALIFORNIA

KFC

K.F.C. JENSEN

CORNER OF BASCOM AVE. AND NAGLEE AVE.
SAN JOSE
CALIFORNIA

JULY 22, 1996	DATE
K.K. / D.M.C.	DRAWN
AS SHOWN	SCALE
9405	JOB NO.

T-1

1 OF 45

GENERAL NOTES:

CONTRACTOR NOTES:

1. GENERAL CONTRACTOR TO VERIFY ALL DIMENSIONS IN FIELD. CONTRACTOR TO NOTIFY ARCHITECT IF EXISTING CONDITIONS IN FIELD VARY MATERIALLY FROM CONDITIONS SHOWN HERE.

2. GENERAL CONTRACTOR IS TO INSTALL ALL EQUIPMENT FURNISHED BY KFC.

3. ELECTRICAL, MECHANICAL, & PLUMBING PERMITS INCLUDING REQUIREMENTS BY GOVERNING AUTHORITIES IS THE RESPONSIBILITY OF THE CONTRACTOR.

4. CONTRACTOR TO CONSULT WITH HARMAN MANAGEMENT FOR SELECTION OF INTERIOR FINISHES & INTERIOR DETAILS.

5. CONTRACTOR IS NOT TO SCALE DRAWINGS FOR DIMENSIONS. CALL ARCHITECT.

6. CONTRACTOR SHALL NOT MAKE ANY CHANGES OR SUBSTITUTIONS WITHOUT THE APPROVAL OF THE ARCHITECT OR HARMAN MANAGEMENT.

7. CONTRACTOR WILL BE REQUIRED TO FILL ALL ASPHALT DEPRESSIONS IN PARKING LOT AND DRIVEWAYS TO ELIMINATE ALL PONDING. G.C. IS REQUIRED TO FLOOD LOT FOR TEST PRIOR TO FINAL WALK-THRU.

8. CONTRACTOR IS TO VERIFY ALL CONDITIONS IN THE FIELD PRIOR TO CONSTRUCTION, TO DETERMINE THE TYPE AND EXTENT OF DEMOLITION. CONTRACTOR IS RESPONSIBLE FOR PROTECTING ADJACENT PROPERTIES.

BUILDING NOTES:

1. SLOPE FLOORS AS REQUIRED TO DRAIN TO NEW FLOOR DRAINS AT 1/4" PER FOOT. MAINTAIN THE SLABS 4" MINIMUM THICKNESS.

2. ALL NEW FLOORS IN KITCHEN- QUARRY TILE WITH MATCHING COVE BASE.

3. ALL NEW INTERIOR WALLS - SHEATH WITH 5/8" TYPE 'X' GYP. BOARD.

4. TOILET ROOM WALLS - 5/8" TYPE 'X' GYP. BOARD WATER PROOF TYPE WITH GLAZED CERAMIC TILE OVER, FLOOR TO CEILING.

5. ALL THRESHOLDS SHALL BE 1/2" OR LESS IN HEIGHT, SEE DETAIL 4/A-8.

6. ALL CONSTRUCTION SHALL COMPLY WITH THE 1996 STATE CODE.

HEALTH DEPARTMENT:

1. HAND WASHING CLEANSER AND SINGLE SERVICE TOWELS SHALL BE PROVIDED IN PERMANENTLY INSTALLED (ENCLOSED TYPE) DISPENSERS ADJACENT TO EACH HAND WASHING FACILITY.

2. DEPRESS FLOORS AS SHOWN TO DRAIN TO FLOOR DRAINS. SLOPE FLOORS 1/4" PER FOOT MINIMUM. MAINTAIN MIN. 4" SLAB THICKNESS.

3. KITCHEN FLOORS - QUARRY TILE W/ MATCHING COVE BASE. SEE FINISH SCHEDULE.

4. PROVIDE AND INSTALL "NO SMOKING" SIGN AND CHOKE CHART TO BE DISPLAYED IN THE KITCHEN. ALSO, PROVIDE AND INSTALL A "WASH HANDS" SIGN OVER THE HAND SINKS.

5. ALL FOOD PREPARATION AREAS, ALL DISHWASHING AREAS, AND WASHING SINKS, SHALL BE PROVIDED W/ AT LEAST 20 FOOT-CANDLES OF LIGHT, AS MEASURED 30 INCHES ABOVE THE FLOOR.

6. FOOD AND UTENSIL STORAGE ROOMS, REFRIGERATION STORAGE, TOILET ROOMS, AND DRESSING ROOMS, SHALL BE PROVIDED WITH AT LEAST 10 FOOT-CANDLES OF LIGHT.

7. IN AREAS WHERE FOOD IS EXPOSED, SHATTERPROOF COVERS SHALL BE INSTALLED OVER ALL LIGHTS.

8. THE RESTROOMS SHALL BE PROVIDED WITH SELF-CLOSING, TIGHT FITTING DOORS.

9. ALL TOILET ROOMS SHALL BE PROVIDED WITH VENTILATION. SEE MECHANICAL PLANS.

10. DINING ROOM FURNISHINGS, FURNISHED BY KFC, INSTALLED BY CONTRACTOR.

11. TOILET ROOMS ARE TO HAVE PRIVACY LOCKS.

12. SECURE CARBON DIOXIDE TANKS TO WALL AS REQUIRED BY COUNTY HEALTH DEPARTMENT.

13. ALL PIPING & CONDUITS ARE TO BE CONCEALED IN WALLS, FLOORS, CEILINGS, & APPROVED CONDUIT RUNS.

14. THE WALK-IN COOLER & FREEZER SHALL HAVE AN ACCURATE, READILY VISIBLE THERMOMETER. CONDENSATE WASTES SHALL BE DIRECTED TO THE ADJACENT FLOOR SINK SHOWN JUST OUTSIDE OF THE UNITS.

15. INTERIOR OF TRASH ENCLOSURE TO HAVE SMOOTH IMPERVIOUS FINISH.

16. ALL KITCHEN EQUIPMENT TO HAVE NSF LABEL.

FIRE SAFETY:

1. "OCCUPANT LOAD 66 MAX" TO BE POSTED WITHIN THE DINING ROOM, IN A CONSPICUOUS PLACE NEAR THE MAIN EXIT, WITH LETTERS NO LESS THAN 1" HIGH. SUCH SIGNS SHALL BE MAINTAINED LEGIBLE BY THE OWNER.

2. ALL DRAPES HANGING CURTAINS DROPS AND ALL OTHER DECORATIVE MATERIALS USED IN THIS FACILITY SHALL BE MADE FROM NON-FLAMMABLE MATERIAL OR SHALL BE TREATED AND MAINTAINED IN A FLAME RETARDANT CONDITION BY MEANS OF A FLAME RETARDANT SOLUTION CERTIFICATE OF SUCH COMPLIANCE SHALL BE PLACED ON FILE WITH THE FIRE PREVENTION BUREAU.

3. EXITS SHALL BE ILLUMINATED AT ANY TIME THE BUILDING IS OCCUPIED WITH A LIGHT HAVING AN INTENSITY OF NOT LESS THAN ONE FOOT-CANDLE MEASURED AT FLOOR LEVEL.

4. PROVIDE KEY LOCK ON ALL EXTERIOR DOORS. ENTRY AND EXIT DOOR MUST BE PROVIDED WITH A READILY VISIBLE DURABLE SIGN ADJACENT TO THE DOORWAY STATING: THIS DOOR MUST REMAIN UNLOCKED ANYTIME THE BUILDING IS OCCUPIED. THE SIGN SHALL BE IN LETTERS 1" HIGH MINIMUM AND ON A CONTRASTING BACKGROUND.

5. ALL DOORS USED AS ENTRY AND/OR EXIT SHALL BE OPENABLE FROM THE INSIDE WITHOUT THE USE OF A KEY OR ANY SPECIAL KNOWLEDGE OR EFFORT. EXIT DOORS IN THE DINING ROOM ARE TO BE FITTED WITH PANIC HARDWARE AND ARE TO HAVE 10" KICKPLATES, SEE DOOR SCHEDULE & SPECIFICATIONS ON SHT. A-8.

6. ALL FURRED-OUT WALLS ARE TO INCLUDE PROPER FIRE-BLOCKING. FIRE STOPPING AND DRAFT STOPPING SHALL BE INSTALLED TO CUT OFF ALL CONCEALED DRAFT OPENINGS (BOTH VERTICAL & HORIZONTAL) AND SHALL FORM AN EFFECTIVE BARRIER BETWEEN FLOORS, BETWEEN A TOP STORY AND A ROOF ATTIC SPACE, AND SHALL SUBDIVIDE ATTIC SPACES AND FLOOR-CEILING ASSEMBLIES. THE INTEGRITY OF ALL FIRE AND DRAFT STOPS SHALL BE MAINTAINED.

7. ALL EQUIPMENT INSTALLED IN THIS PROJECT IS TO HAVE UL, AGA, NSF AND/OR OTHER APPROPRIATE LISTINGS.

8. PROVIDE A 2A:10-BC FIRE EXTINGUISHER IN PUBLIC AREA & A 40 BC FIRE EXTINGUISHER IN KITCHEN AREA MOUNTED SO THAT ALL AREAS OF THE BUILDING ARE WITHIN 75 FEET TRAVEL DISTANCE TO AN EXTINGUISHER. SEE SHT. EQ-1 FOR EXACT LOCATION.

9. FOAM PLASTIC INSULATED FREESTANDING WALK-IN COOLERS AND FREEZER UNITS HAVING AN AGGREGATE FLOOR AREA 400 SQUARE FEET OR MORE AND OR FLAME-SPREAD RATING MORE THAN 25 SHALL BE PROTECTED WITH AUTOMATIC SPRINKLERS.

10. THE MAXIMUM FLAME-SPREAD CLASS OF FINISH MATERIALS USED ON THE INTERIOR WALLS AND CEILING SHALL NOT EXCEED THAT SET FORTH IN TABLE NO. 8-B. WHEN USED AS INTERIOR CEILING FINISH, CARPETING AND SIMILAR MATERIALS HAVING A NAPPED, TUFTED, LOOPED OR SIMILAR SURFACE SHALL HAVE A CLASS 1 FLAME SPREAD.

11. MATERIALS INCLUDING WIRING WITHIN PLENUMS OR DUCTS SHALL HAVE A FLAME-SPREAD INDEX OF NOT MORE THAN 25 AND A SMOKE-DEVELOPED RATING OF NOT MORE THAN 50.

12. APPROVED NUMBERS OR ADDRESSES SHALL BE PLACED ON ALL NEW AND EXISTING BUILDINGS IN SUCH A POSITION AS TO BE PLAINLY VISIBLE AND LEGIBLE FROM THE STREET OR ROAD FRONTING THE PROPERTY. SAID NUMBERS SHALL CONTRACT WITH THEIR BACKGROUND. SUB-UNITS OR ANY BUILDING OR COMPLEX NOT HAVING INDIVIDUALLY ASSIGNED ADDRESSES SHALL BE IDENTIFIED IN A CONSISTENT MANNER EITHER NUMERICAL OR ALPHABETICALLY USING A LOGICAL SEQUENCE. UNIT NUMBERS OR LETTERS IN A BUILDING OR COMPLEX OF MULTIPLE OCCUPANCY SHALL BE AFFIXED NEAR THE MAIN ENTRANCE OF EACH OCCUPANCY IN SUCH A POSITION AS TO BE PLAINLY VISIBLE AND LEGIBLE.

13. PROVIDE AN AUTOMATIC FIRE EXTINGUISHING SYSTEM IN GREASE HOOD AND DUCT. SUBMIT SHOP DRAWINGS TO THE SAN JOSE FIRE DEPARTMENT FOR APPROVAL AND PERMIT.

14. AISLES LEADING TO REQUIRED EXITS SHALL BE PROVIDED FROM ALL PORTIONS OF BUILDINGS.

15. EXIT SIGNS SHALL BE INSTALLED AT REQUIRED EXIT DOORWAYS AND WHERE OTHERWISE NECCESSARY TO CLEARLY INDICATE THE DIRECTION OF EGRESS WHEN TWO OR MORE EXITS ARE REQUIRED FROM THE ROOM OR AREA. GRAPHICS, ILLUMINATION AND POWER SUPPLY SHALL COMPLY WITH T-24 2-1013.2, 1013.3 AND 1013.4

PUBLIC WORKS:

1. PLACE ALL PROPOSED UTILITY LINES UNDERGROUND.

2. THE CONTRACTOR IS TO OBTAIN A DEPARTMENT OF PUBLIC WORKS PERMIT PRIOR TO DOING ANY WORK IN THE PUBLIC STREET OR EASEMENT AREA.

TITLE 24- ENERGY:

1. INSULATION: R-11 AT WALLS AND R-19 AT CEILING. HOLD CEILING INSULATION TO BOTTOM OF ROOF DECK, NOT ABOVE CEILING GRID.

2. GLAZING: DOUBLE GLAZING WITH 2 TINTED PANELS 1/4" THICK, TEMPERED GLASS TYPICAL.

3. SEE TITLE 24 CALCS. THIS PAGE AND SHEET E-1 FOR T-24 LIGHTING CALCS.

TITLE 24/A.D.A. DISABLED ACCESS

1. PROVIDE A 36" HIGH HANDICAPPED SIGN WITH THE INTERNATIONAL SYMBOL OF ACCESSIBILITY, NOT SMALLER THAN 70 SQ. INCHES IN AREA AND SHALL BE CENTERED AT THE END OF THE PARKING SPACE.

ALSO, PLACE A SIGN AT THE ENTRY TO THE PARKING AREA STATING:

UNAUTHORIZED VEHICLES NOT DISPLAYING DISTINGUISHING PLACARDS OR LICENSE PLATES ISSUED FOR PHYSICALLY HANDICAPPED PERSONS MAY BE TOWED AWAY AT OWNER'S EXPENSE. TOWED VEHICLES MAY BE RECLAIMED AT
_____ OR _____ BY
_____ TELEPHONING
_____ IN ADDITION TO THE ABOVE REQUIREMENTS, THE SURFACE OF EACH H.C. PARKING PLACE SHALL HAVE A SURFACE IDENTIFICATION DUPLICATING THE SYMBOL OF ACCESSIBILITY IN BLUE PAINT, AND IS TO BE AT LEAST 3 SQ. FT IN SIZE.

TITLE - 24:

PLAN CHECK APPROVAL
AUG 09 1996
KUTZMANN & ASSOCIATES

2

9672260

Copyright 1996
EDWIN BRUCE ASSOCIATES. All designs, drawings, and written material appearing herein, are protected and constitute original and unpublished work of the Architect and may not be copied, revised, re-used or disclosed without the written consent of the Architect. Equipment manufactured by others is excluded. Drawings and specifications are instruments of architectural service, and shall remain the property of the Architect. Use is restricted to the site for which they were prepared.

EDWIN BRUCE
Associates
Architects
A.I.A.
1625 The Alameda
Suite 610
San Jose, CA.
95126
Ph. 408/995 5701
Fax 408/995 5022

LICENSED ARCHITECT EDWIN A. BRUCE NO. C-14586 REN. 5-31-97 STATE OF CALIFORNIA

KFC

K.F.C. JENSEN
CORNER OF BASCOM AVE. AND NAGLEE AVE.
SAN JOSE CALIFORNIA

JULY 22, 1996	DATE
D.C.	DRAWN
1/4 = 1'-0"	SCALE
9405	JOB NO.

T-2

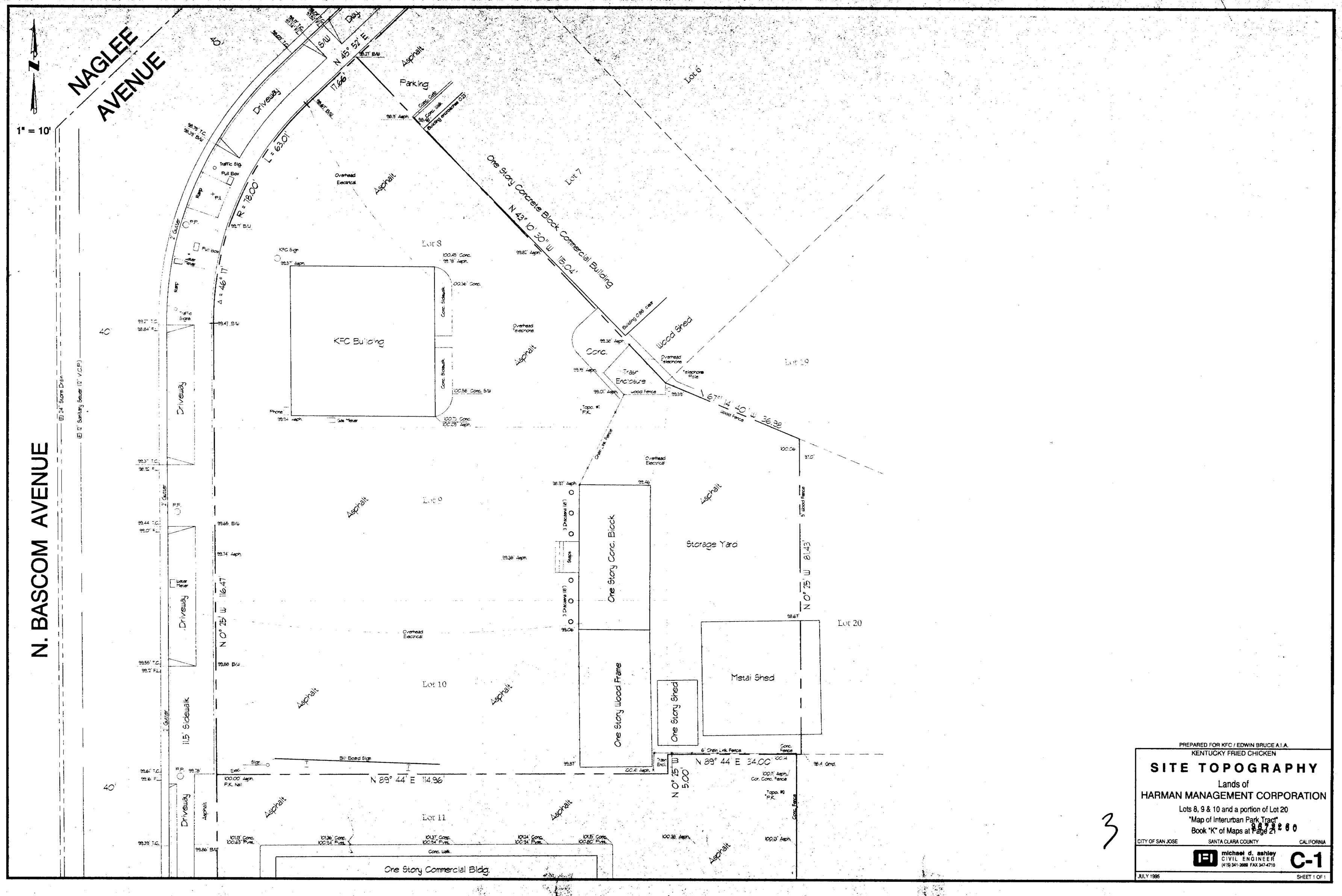

PREPARED FOR KFC / EDWIN BRUCE A.I.A.
KENTUCKY FRIED CHICKEN

SITE TOPOGRAPHY

Lands of
HARMAN MANAGEMENT CORPORATION
Lots 8, 9 & 10 and a portion of Lot 20
"Map of Interurban Park Tract"
Book "K" of Maps at Page 21

CITY OF SAN JOSE | SANTA CLARA COUNTY | CALIFORNIA

michael d. ashley
CIVIL ENGINEER
(415) 341-2888 FAX 347-4710

C-1

JULY 1995

SHEET 1 OF 1

3

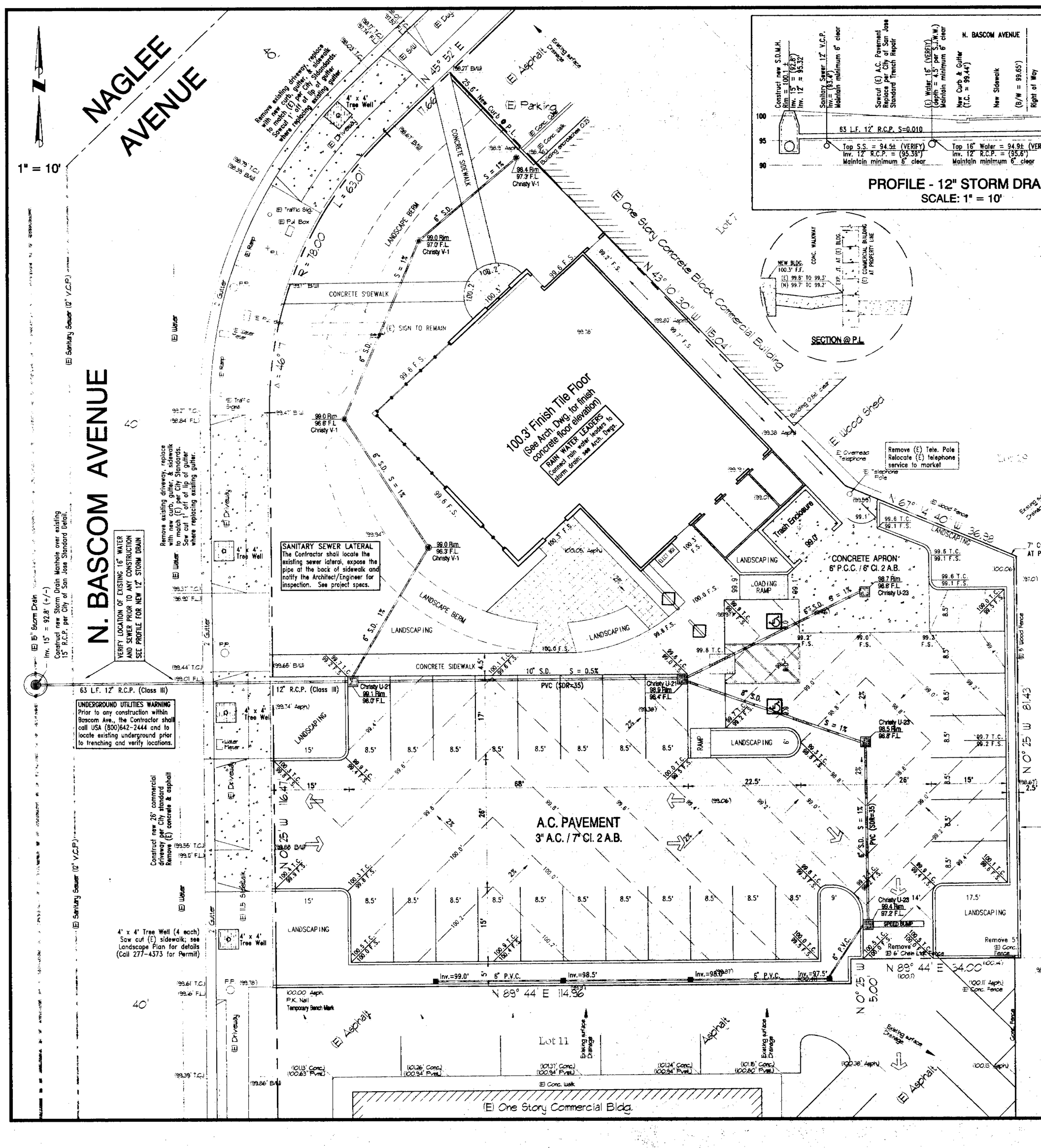

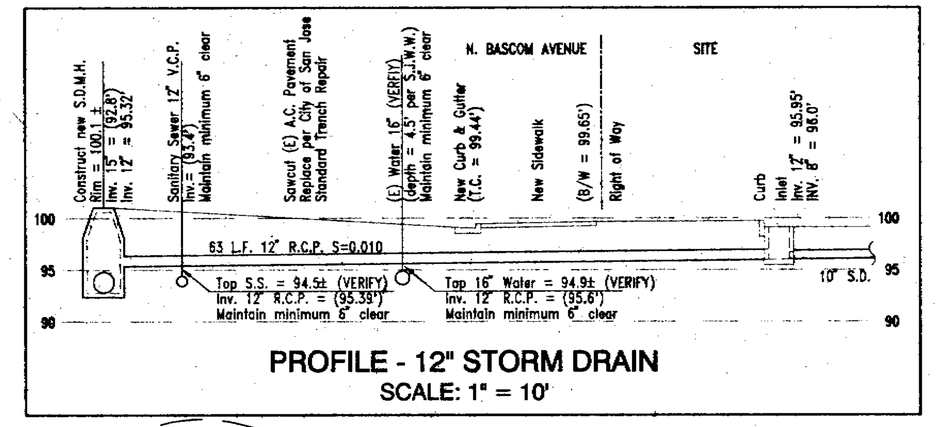

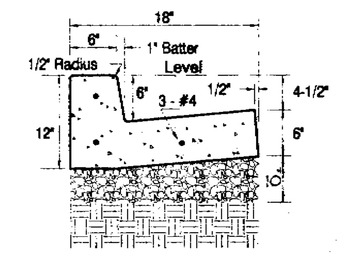

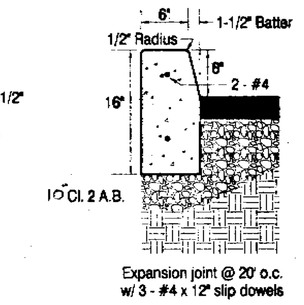

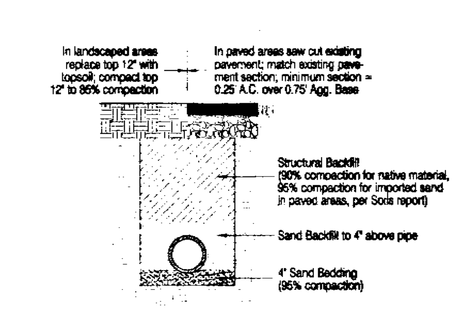

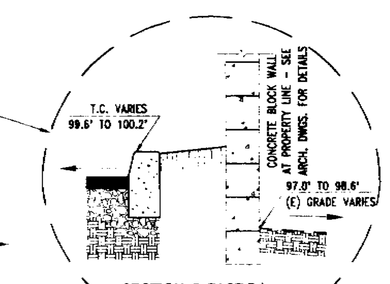

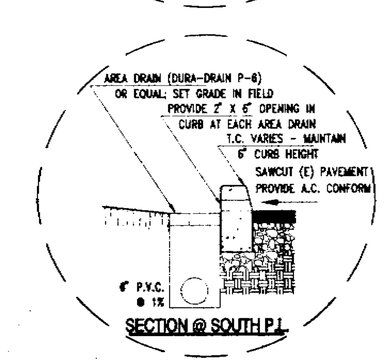

SOILS REPORT

1. A soils report has been prepared by Cleary Consultants, Inc. (415) 948-0574 dated November 1995. Prior to proceeding with the required work, the Contractor shall obtain a copy of the soils report and review the recommendations contained therein.
2. Recommendations and construction details for the area within the building should be referred to the architectural and structural drawings. Performance of the recommendations contained in the soils report will be reviewed by the soils engineer during construction.
3. Recommendations and construction details for the site area are summarized here. The Contractor is referred to the soils report for construction details.

GRADING NOTES

1. The areas to receive compacted fill shall be stripped of all asphalt pavement, vegetation, debris, existing uncompacted fill and soft or disturbed soil. The excavated areas shall be inspected by the soils engineer prior to placing controlled compacted fill.
2. The exposed grade shall then be scarified to a depth of 6 inches or as otherwise recommended by the soils engineer, moistened to optimum moisture content, and recompacted to 90 percent of the maximum density ASTM D1557.
3. Fill consisting of on-site or materials approved by the soils engineer, shall be placed in controlled compacted layers with approved compaction equipment. The excavated on-site soil materials, excluding all deleterious matter, are considered satisfactory for use in controlled fills.
4. The fill shall be compacted to at least 90 percent density, the top 6 inches of subgrade shall be compacted to 95 percent density. The maximum laboratory density shall be determined by ASTM test designation D1557.
5. Inspection and field tests shall be carried on during grading to assist the Contractor in obtaining the required degree of compaction and the proper moisture content. Where compaction is less than required, additional compactive effort shall be made with adjustment of the moisture content as necessary until the required percent compaction is obtained.
6. The soils engineer should be notified 24 hours prior to any grading operation. The procedures and methods of grading may then be discussed between the Contractor and the soils engineer. This will facilitate the performance of grading operations and minimize possible construction delays.

GENERAL NOTES

1. Construction work and operations shall conform to the latest edition of the "Standard Specifications for Public Works Construction", supplemented by special provisions required by the City of San Jose Engineer's office. The performance and completion of all work must be to the satisfaction of the City Engineer.
2. Construction details shall be in accordance with provisions of the current City of San Jose Details and the 1994 Standard Specifications for Public Works Construction unless otherwise shown on the plans. In the event of conflict, the latter shall apply.
3. The Contractor shall provide adequate dust control as required by the City Engineer.
4. All underground installations shall be in place and the trench backfilled and compacted before placing aggregate base material or surface structures.
5. Accurate verification as to size, location and depth of existing underground conduits or facilities shall be the individual contractor's responsibility. Plan locations are approximate and for general information only. Contractor shall contact utility companies for exact locations of utilities. Call USA (800) 642-2444 48 hours prior to the start of excavation.
6. Compaction of all fill areas, trench backfill and approved aggregate base material shall be in accordance with the City standard trench detail.
7. Concrete used for structural purposes shall be class "A" (6 sack per cubic yard) as specified in the Caltrans Standard Specifications (1992). Concrete placed must develop a minimum strength factor of 2200 psi in seven days and 3000 psi in 28 days.
8. All material and methods of construction of sanitary sewers and storm drainage systems shall conform to the current City of San Jose Standard Details and the 1994 Standard Specifications for Public Works Construction unless otherwise shown on the plans.
9. All P.V.C. sewer shall conform to ASTM Designation D-3034 SDR 35; joints for P.V.C. shall comply with ASTM D-3212 -- Joints for Drain and Sewer Pipes using Flexible Elastomeric Seals. Trenching and backfill materials shall conform with the City of San Jose Standard Trench Detail.
10. All material and methods of construction of water distribution facilities shall conform to the requirements and specifications of San Jose Water Works.
11. Aggregate Base shall be class 2 with 3/4" inch maximum aggregate and shall conform to the provisions of Section 26 of the Caltrans Standard Specifications (1992). Asphalt Tack Coat shall be SS-1h asphalt emulsion conforming to Sections 39 and 94 of the Standard Specifications. Asphalt Concrete shall be Type B and shall conform to the provisions of Section 39 of the Caltrans Standard Specifications (1992) and shall be steam refined with a viscosity grade AR 4000. Asphalt shall be place in two lifts, the first lift shall be 3/4" aggregate, the final lift shall be 3/8" aggregate.
12. Encroachment permits: Encroachment permits shall be secured from the City of San Jose, Department of Public Works for all work within the street right of way.
13. PROVIDE 10" THK. CLASS 2 AGGREGATE BASE UNDER ALL CONCRETE FLATWORK ON SITE EXCEPT TRASH ENCLOSURE APRON
14. CONCRETE WALKS TO BE 4" THK. W/ WIRE MESH, PER SOILS REPORT

PLAN CHECK APPROVAL
AUG 0 9 1996
KUTZMANN & ASSOCIATES

PREPARED FOR KFC / EDWIN BRUCE A.I.A.
KENTUCKY FRIED CHICKEN
Bascom Avenue & Naglee Avenue

4

672260 **SITE PLAN**

Grading, Paving, & Drainage

CITY OF SAN JOSE | SANTA CLARA COUNTY | CALIFORNIA

michael d. ashley CIVIL ENGINEER (415) 341-2669 FAX 347-4710

C-2

Revised per City Comments - July 18, 1996 | MAY 1996 | SHEET 1 OF 1

SITE PLAN

1/8" = 1'-0"

PARKING & SEATING CALCULATIONS

1083 S.F. DINING AREA / 40 = 27 SPACES REQ'D ---- 28 SPACES PROVIDED

28 SPACES x 2.5 = 70 SEATS MAXIMUM ---- 66 SEATS PROVIDED

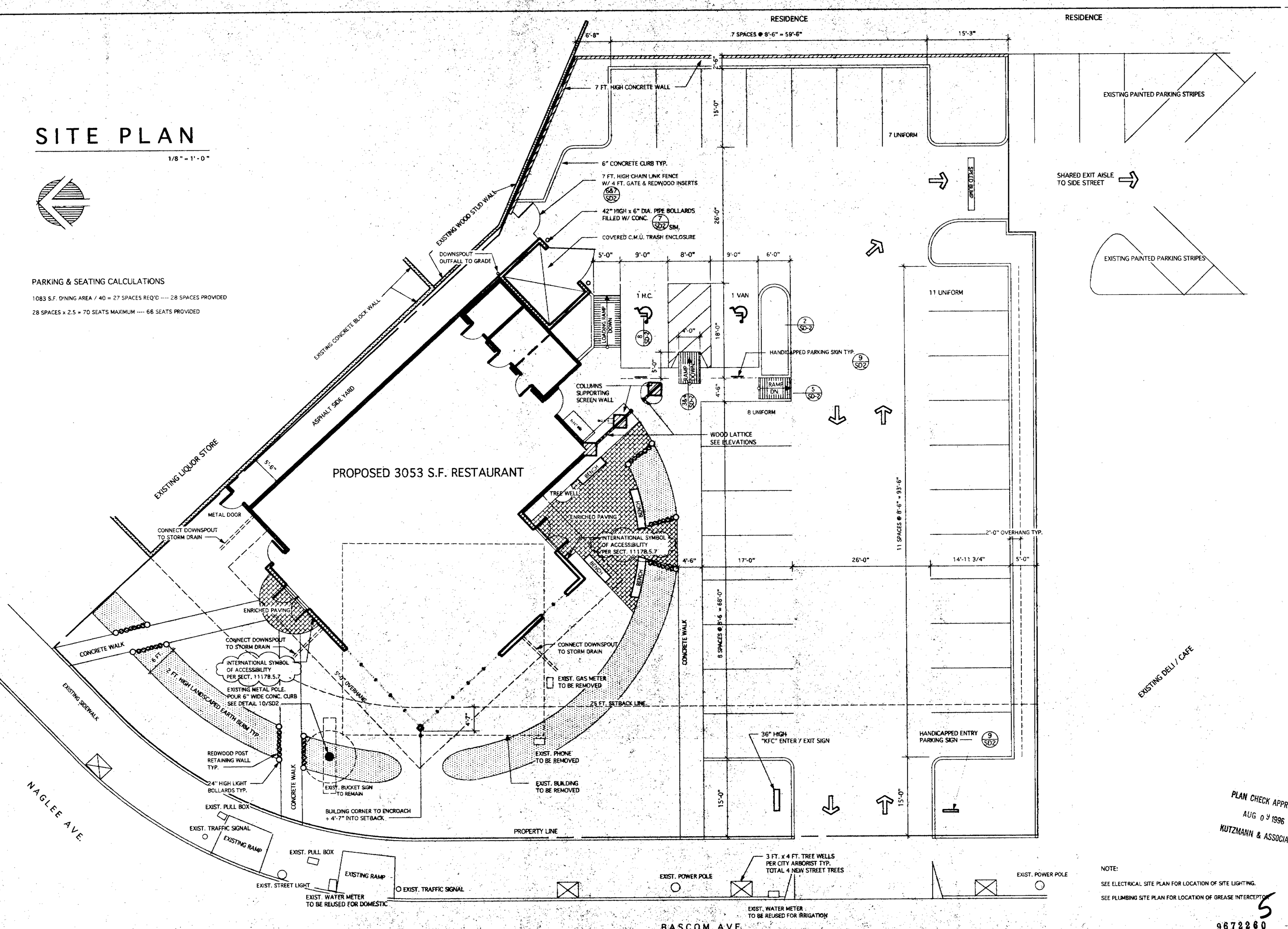

NOTE:

SEE ELECTRICAL SITE PLAN FOR LOCATION OF SITE LIGHTING.

SEE PLUMBING SITE PLAN FOR LOCATION OF GREASE INTERCEPTOR

PLAN CHECK APPROVAL
AUG 09 1996
KUTZMANN & ASSOCIATES

5

9672260

Copyright 1996
EDWIN BRUCE ASSOCIATES. All designs drawings, and written material appearing herein, are protected and constitute original and unpublished work of the Architect and may not be copied, revised, re-used or disclosed without the written consent of the Architect. Equipment manufactured by others is excluded. Drawings and specifications are instruments of architectural service, and shall remain the property of the Architect. Use is restricted to the site for which they were prepared.

EDWIN BRUCE
Associates
Architects
A.I.A.

1625 The Alameda
Suite 610
San Jose, CA 95126
Ph 408/995 5701
Fax 408/995 5022

LICENSED ARCHITECT EDWIN L. BRUCE NO. C-14596 REN. 5-31-97 STATE OF CALIFORNIA

KFC

K.F.C. JENSEN
CORNER OF BASCOM AVE. AND NAGLEE AVE.
SAN JOSE CALIFORNIA

JULY 22, 1996	DATE
D.C.	DRAWN
1/8"=1'-0"	SCALE
9405	JOB NO.

SD-1

... OF ... 46

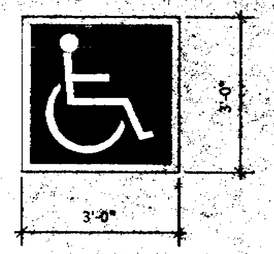

OUTLINE OF A PROFILE VIEW OF A WHEELCHAIR WITH OCCUPANT IN WHITE ON A BLUE BACKGROUND

LOCATE PROFILE VIEW SO THAT IT IS VISIBLE TO TRAFFIC ENFORCEMENT OFFICER WHEN VEHICLE IS PROPERLY PARKED IN THE SPACE

PAVEMENT ACCESSIBILITY SYMBOL PER SECTION 3107A(c) SCALE 1/2" = 1'-0" | 8

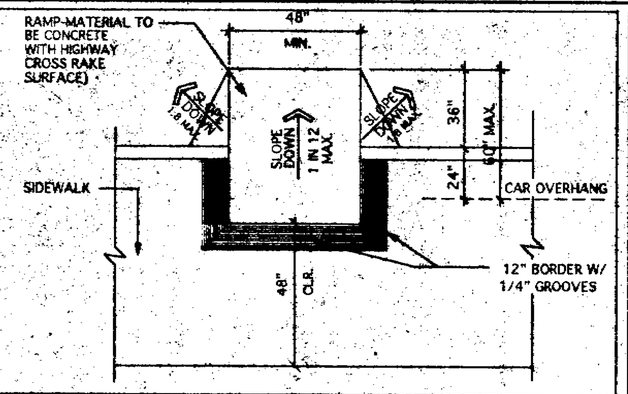

CURB RAMP PLAN N.T.S. | 3

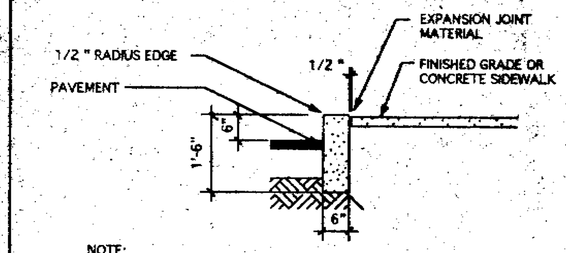

NOTE:
PROVIDE EXPANSION JOINTS AT 20'-0" O.C. MAX.

SEE CIVIL DRAWINGS FOR FURTHER DETAILS

CONCRETE CURB SECTION STANDARD 1/2 "=1'-0" | 1

REFLECTORIZED SIGN PERMANENTLY POSTED IMMEDIATELY ADJACENT TO AND VISIBLE FROM EACH STALL OR SPACE CONSISTING OF A PROFILE VIEW OF A WHEELCHAIR WITH AN OCCUPANT IN WHITE ON A DARK BLUE BACKGROUND. THE SIGN SHALL NOT BE SMALLER THAN 70 SQUARE INCHES IN AREA AND, WHEN IN A PATH OF TRAVEL, SHALL BE POSTED AT A MINIMUM HEIGHT OF 36" FROM THE PARKING SPACE FINISH GRADE, GROUND OR SIDEWALK.

SPACES COMPLYING WITH SECTION 3107A (B)2 SHALL HAVE AN ADDITIONAL SIGN "VAN ACCESSIBLE" MOUNTED BELOW THE SYMBOL OF ACCESSIBILITY.

* SEE PROPOSED ACCESSIBLE PARKING PLAN ABOVE FOR LOCATIONS.

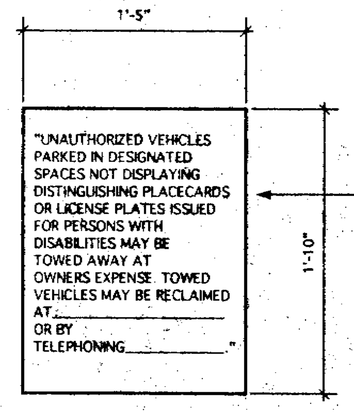

AN ADDITIONAL SIGN SHALL ALSO BE POSTED, IN A CONSPICUOUS PLACE, AT EACH ENTRANCE TO OFF-STREET PARKING FACILITIES, OR IMMEDIATELY ADJACENT TO AND VISIBLE FROM EACH STALL OR SPACE. THE SIGN SHALL BE NOT LESS THAN 17" BY 22" IN SIZE WITH LETTERING NOT LESS THAN 1" IN HEIGHT, WHICH CLEARLY AND CONSPICUOUSLY STATES THE FOLLOWING:

BLANK SPACES ARE TO BE FILLED IN WITH APPROPRIATE INFORMATION AS A PERMANENT PART OF THE SIGN.

* SEE SITE PLAN ON SHEET SD-1 FOR LOCATIONS.

DISABLED & VAN ACCESSIBLE PARKING SIGNS 1 1/2 "=1'-0" | 9

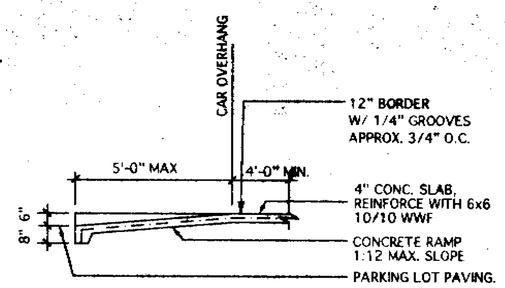

RAMP SECTION 1/4 "=1'-0" | 4

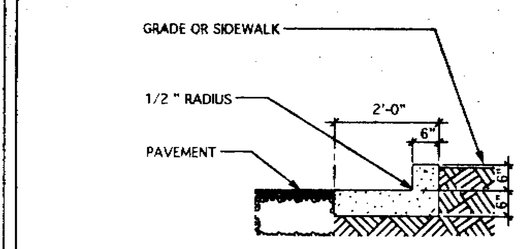

SEE CIVIL DRAWINGS FOR FURTHER DETAILS

CONCRETE CURB SECTION ALTERNATE 1/2 "=1'-0" | 2

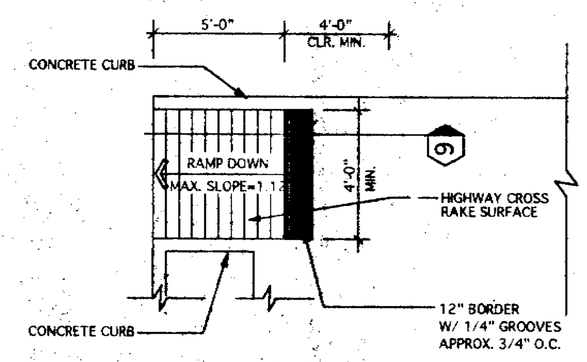

RAMP PLAN 1/4 "=1'-0" | 5

SITE GENERAL NOTES

1. THESE ARE STANDARD DETAILS-LOCAL CODES PREVAIL.
2. ALL DETAILS SHOWN ON THIS SHEET MAY NOT APPLY-SEE SITE PLAN FOR APPLICABLE DETAILS.
3. EXTRUDED CONCRETE CURBS MAY BE FURNISHED AS A DEDUCT ALTERNATE NOTED ON BID.
4. CONTRACTOR MAY AT HIS OPTION POUR CURB INTEGRAL WITH SIDEWALK AND TURN DOWN EDGE 12" BELOW FINISHED GRADE.

LANDSCAPE NOTES

1. AREAS DESIGNATED "LANDSCAPED" SHALL BE BACKFILLED WITH CLEAN SUBSOIL, FREE OF BUILDING DEBRIS, CRUSHED ROCK, MORTAR MIX, ETC.
2. AREAS DESIGNATED "LANDSCAPED" SHALL BE FILLED WITH NOT LESS THAN 4" OF TOPSOIL WHICH SHALL BE BROUGHT TO A HEIGHT OF 2" BELOW CURBINGS. SUCH TOPSOIL SHALL BE FREE OF WEEDS AND FIELD GRASSES AND SHALL MEET THE APPROVAL OF THE KFC CONSTRUCTION SUPERVISOR. WHERE POSSIBLE TOPSOIL SHALL BE PULVERIZED.
3. IN AREAS WHERE PRIOR BUILDINGS OR DRIVES HAVE EXISTED (SUCH AS REMODEL OR REBUILD UNITS), ALL AREAS DESIGNATED "LANDSCAPED" FORMED BY CURBINGS LAID OVER BLACKTOP OR COMPACTED STONE FROM THE PREVIOUS STRUCTURES, SHALL BE FULLY EXCAVATED OF ALL SUCH BASE MATERIALS TO NATURAL SUBSOIL LEVEL. FILL AND TOPSOIL SHALL NOT BE PLACED OVER CONCRETE, ASPHALT, OR COMPACTED ROCK.
4. IN AREAS ADJACENT TO "LANDSCAPED" AREAS, UNDER-RUN FROM CONC. FORMS SHALL BE BROKEN AWAY WHEN FORMS ARE REMOVED.
5. BACKFILLING WITH WET SOIL SHALL BE AVOIDED IN AREAS DESIGNATED "LANDSCAPED".
6. DUMPING OF WASTE CLEANING FLUIDS SUCH AS ACIDS, OIL, ETC. SHALL NOT OCCUR.
7. ALL UNDERGROUND WATER LINES, VALVE BOXES, ACCESS PLATES, ETC. SHALL BE CLEARLY MARKED BY A STAKE AND RED RIBBON BY THE GENERAL CONTRACTOR PRIOR TO THE STARTING OF FINISH GRADING BY THE LANDSCAPE CONTRACTOR.

CHAIN LINK GATE NOTES

1. FABRIC TO BE 9 GAUGE DIAMOND MESH (APPROXIMATELY 2")
2. PROVIDE & INSTALL 2" (NOMINAL) WIDTH PRIVACY STRIPS INTERWOVEN INTO CHAIN LINK FABRIC, FULL HEIGHT OF GATES. FINISH OF SLATS SHALL BE BAKED ENAMEL-COLOR TO MATCH DUMPSTER ENCLOSURE.
3. GATE FRAME SHALL CONSIST OF 2" O.D. GALV. PIPE, FULLY WELDED AND GROUND SMOOTH, W/ 180 MALLEABLE BOX HINGES & LOCKING DEVICE FOR GATE.

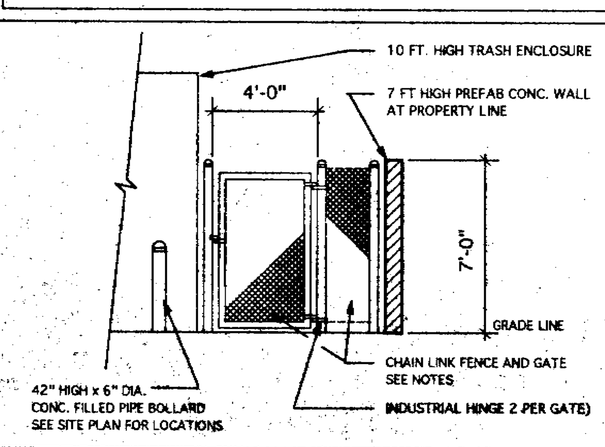

CHAIN LINK FENCE & GATE 1/4 "=1'-0" | 6

YARD LIGHTING NOTES

1. FOUNDATION SHALL BE FURNISHED & INSTALLED BY G.C. SEE ELECTRICAL SITE DRAWING FOR DETAILS.
2. G.C. SHALL INSTALL CONDUIT AND ELECTRICAL SERVICE TO BASE OF EACH POLE. KFC TO FURNISH FIXTURE AND POLE. G.C. TO INSTALL POLE AND COMPLETE ELECTRICAL CONNECTION.

PLAN CHECK APPROVAL
AUG 7 1998
KUTZMANN & ASSOCIATES

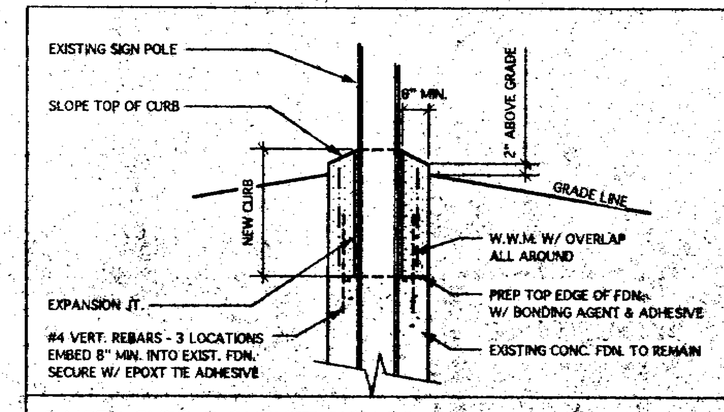

RAISED CURB @ BUCKET SIGN POLE 1/2 "=1'-0" | 10

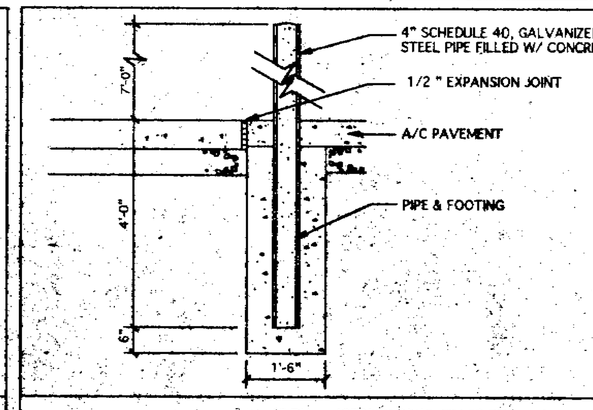

GATE POST SECTION 6" DIA. x 42" HIGH CONC. FILLED PIPE BOLLARD SIMILAR 1/2 "=1'-0" | 7

SIGNAGE NOTES

1. CONTRACTOR TO VERIFY TYPES AND LOCATIONS OF SIGNS TO BE INSTALLED. SEE SITE PLAN AND K.F.C. REPRESENTATIVE ON SITE.
2. ALL PHASES OF SIGN INSTALLATION SHALL MEET LOCAL CODES.
3. ALL FOUNDATIONS SHALL REST ON UNDISTURBED EARTH.
4. INSTALLATION AND NOMENCLATURE OF SIGNS TO BE VERIFIED WITH THE SIGN MANUFACTURER, AND KFC REPRESENTATIVE.
5. ALL EXTERIOR SIGNAGE INCLUDING SUPPORTS AND BASES, TO BE FURNISHED AND INSTALLED BY KFC. (SOB)
6. ELECTRICAL SERVICE FURNISHED & INSTALLED BY G.C.
7. CONCRETE SHALL HAVE A STRENGTH OF 2,500 PSI.

6
9672260

Copyright 1996
EDWIN BRUCE ASSOCIATES. All designs drawings, and written material appearing herein, are protected and constitute original and unpublished work of the Architect and may not be copied, revised, re-used or disclosed without the written consent of the Architect. Equipment manufactured by others is excluded. Drawings and specifications are instruments of architectural service, and shall remain the property of the Architect. Use is restricted to the site for which they were prepared.

EDWIN BRUCE
Associates
Architects
A.I.A.

1625 The Alameda
Suite 610
San Jose, CA 95126
Ph 408/995 5701
Fax 408/995 5022

LICENSED ARCHITECT EDWIN BRUCE NO. C-12806 REN. 6-30-97 STATE OF CALIFORNIA

KFC

K.F.C. JENSEN
CORNER OF BASCOM AVE. AND NAGLEE AVE.
SAN JOSE CALIFORNIA

JULY 22, 1996	DATE
D.C.	DRAWN
1/8"=1'-0"	SCALE
9405	JOB NO.

SD-2

LANDSCAPE PLAN

1/8" = 1'-0"

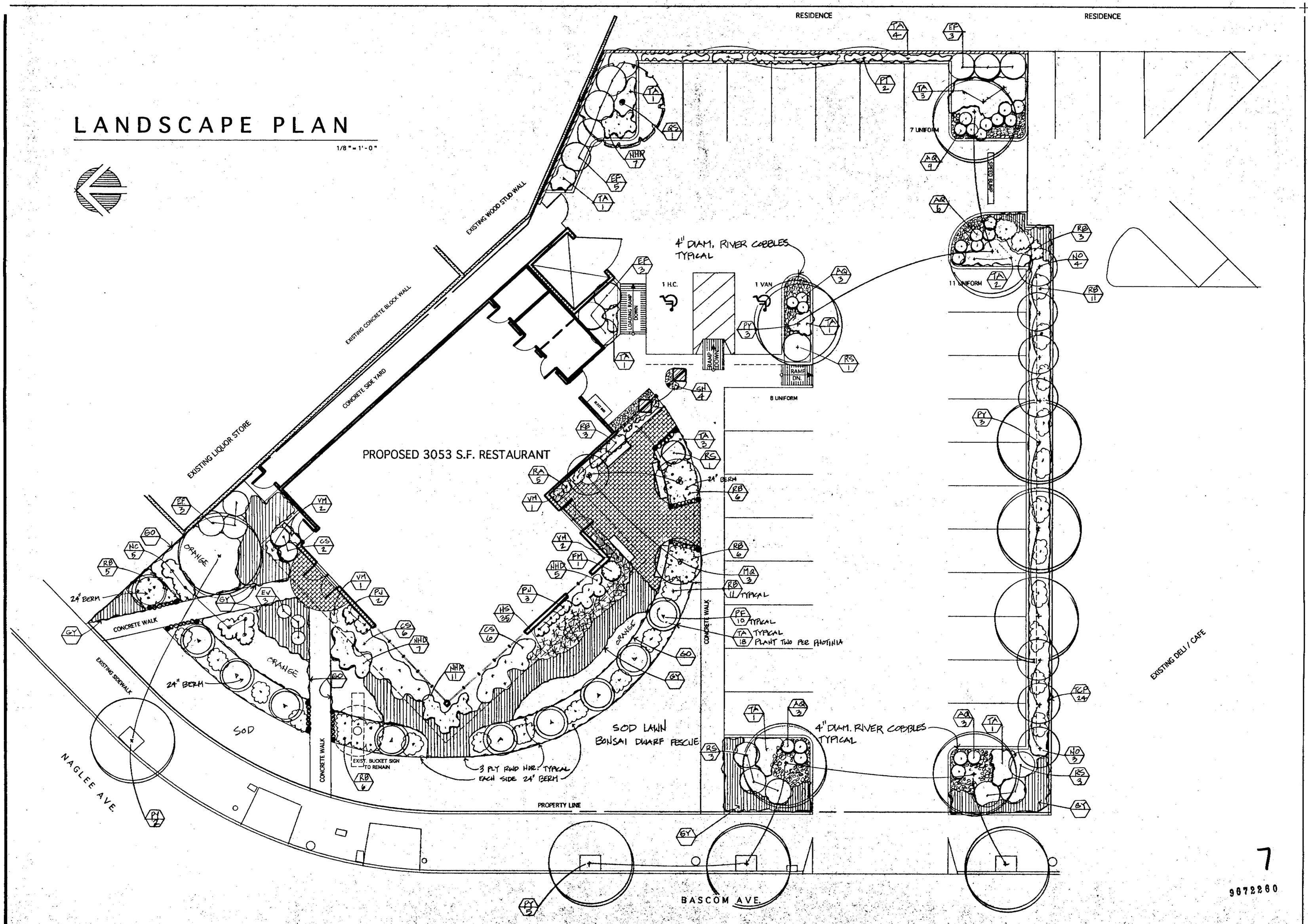

Copyright 1996
EDWIN BRUCE ASSOCIATES. All designs drawings, and written material appearing herein, are protected and constitute original and unpublished work of the Architect and may not be copied, revised, re-used or disclosed without the written consent of the Architect. Equipment manufactured by others is excluded. Drawings and specifications are instruments of architectural service, and shall remain the property of the Architect. Use is restricted to the site for which they were prepared.

BRANDEAU
Associates
Landscape
Architects

1005 Lakedale Way
Sunnyvale, CA 94089
Ph 415/967 6677

state licence No. 1676

KFC

K.F.C. JENSEN

CORNER OF BASCOM AVE. AND NAGLEE AVE.
SAN JOSE
CALIFORNIA

MAY 24, 1996	DATE
D.B.	DRAWN
1/8"=1'-0"	SCALE
9405	JOB NO.

L-1

1 OF 7

7

9072260

PLANT LIST

KEY	BOTANICAL NAME / COMMON NAME	SIZE	QTY
	TREES		
PY	Plantanus Acerifolia 'Yarwood' — Yarwood Sycamore	15G	10
PF	Photina 'Frazeri' (6' standards)	15G	10
MQ	Melaleuka Quinquenervia (Multitrunk)	24" BOX	3
NO	Nerium Oleander (6' standards) — 'Sister Agnes' (White)	15G	7
QS	Quercus Suber — Cork Oak	15G	1
	SHRUBS		
AQ	Agapanthus 'Queen Anne'	1G	24
CS	Camellia Sasangua 'White Doves'	5G	14
EF	Escallonia Fradesii	5G	11
EV	Euryops Veridis	1G	3
FM	Fortunella Margarita — 'Nagami' Kumquat	5G	1
NHD	Nandina 'Harbor Dwarf'	1G	16
NC	Nandina 'Compacta'	5G	5
RA	Rumohra Adiantiformis (fern)	1G	5
RB	Raphiolepis 'Ballarina'	1G	48
RS	Raphiolepis 'Springtime'	1G	7
	VINES & GROUNDCOVERS		
GO	Gazania 'Orange' (green, clumping)	12" OC	FLATS
GY	Garzania 'Yellow' (green' clumping)	12" OC	FLATS
HS	Hemerocalis 'Stella d' Oro' — Stella Daylily	1G	35
PJ	Pandorea Jasminoides — Bower Vine	5G	5
PT	Parthenocissis Tricuspidata — Boston Ivy	5G	2
SH	Sollya Heterophylla	1G	4
TA	Trachelospermum Asiaticum — Asian Jasmine	1G	29
VM	Vinca Minor	1G	6
TCP	Teucrium Chamaedrys 'Prostratum' — Prostrate Germander	1G	24

Note: All planting areas shall be watered with an automatic irrigation system.

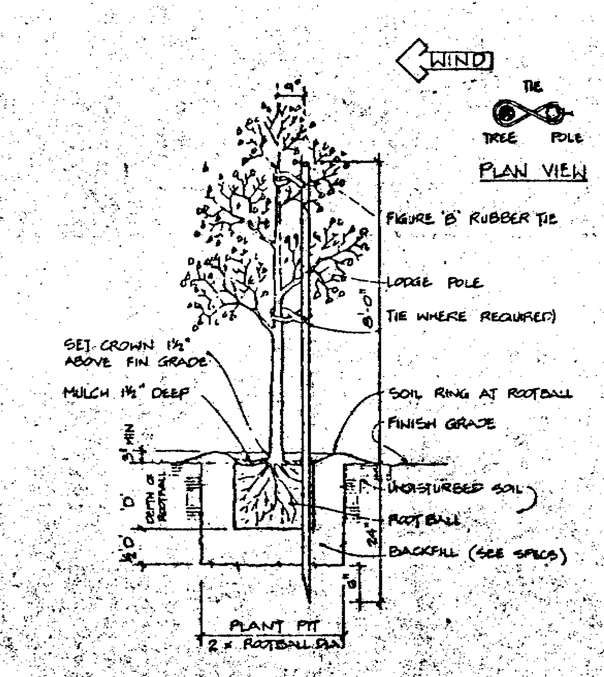

TREE PLANTING & STAKING DETAIL

GENERAL PLANTING NOTES

All work shall be performed in accordance with the best standards of practice relating to the various trades, and under the continuous supervision of a competent foreman capable of interpreting the drawings. Said work shall consist of furnishing all labor, materials, tools, equipment and services required to perform all planting as shown on this plan.

All plants shall be as specified in the plant schedule: healthy, shapely, well-rooted specimens, free of insects and disease. Plants shall be procured from nurseries inspected by the State Department of Agriculture. Any plant delivered to the job site which is found not to be true to name or in unsuitable condition will be removed from the site and replaced with suitable stock.

Substitution of any plant material shall not be allowed without written approval of Landscape Architect.

Quantities in plant schedule are for reference only. Verify quantities as per plan.

Plant material shall be protected and maintained during construction and guaranteed for 90 days after final installation.

Prior to starting work, contractor shall inspect site and report any discrepancies between this scaled drawing and actual site conditions to Landscape Architect for a design decision.

All planting areas shall haventrolized redwood or cedar sawdust applied at a rate of 6 cu. yds. per 1000 sq. ft. plus 6-20-20 fertilizer incorporated at a rate of 25 lbs. per 1000 sq. ft; sawdust and fertilizer spread and rototilled into the top 6" of soil; all areas shall be free of sticks, rocks and debris.

Backfill prepared for individual tree and shrub holes shall be 50% nitrolized sawdust and 50% native soil plus 20-10-5 fertilizer (Agriform tabs or equal) Plant holes shall be 1½ times the depth by 2 times the diameter of the root ball, dug square (no rounded corners) with the sides scarified. Any encircling roots should be cut and the root ball loosened before planting.

All trees shall be planted and staked as per detail on drawing.

All shrub and ground cover areas shall be treated with a pre-emergent herbicide as recommended by a licensed pest control advisor and applied per manufacturer's published instructions, after planting and cultivation.

All shrub and ground cover areas shall be mulched with 1" min. ¼"-1" dia. bark chips: Contractor shall submit sample to Landscape Architect prior to spreading.

8

9672260

BEST AVAILABLE COPY

Copyright 1996
EDWIN BRUCE ASSOCIATES. All designs drawings, and written material appearing herein, are protected and constitute original and unpublished work of the Architect and may not be copied, revised, re-used or disclosed without the written consent of the Architect. Equipment manufactured by others is excluded. Drawings and specifications are instruments of architectural service, and shall remain the property of the Architect. Use is restricted to the site for which they were prepared.

BRANDEAU
Associates
Landscape
Architects

1005 Lakedale Way
Sunnyvale, CA 94089
Ph 415/967 6677

state licence No. 1676

KFC

K.F.C. JENSEN

CORNER OF BASCOM AVE. AND NAGLEE AVE.
SAN JOSE CALIFORNIA

MAY 24, 1996	DATE
D.B.	DRAWN
1/8"=1'-0"	SCALE
9405	JOB NO.

L-2

1 OF 7

IRRIGATION PLAN

1/8" = 1' - 0"

IRRIGATION SYSTEM LEGEND

IRRIGATION WATER METER-1"	-EXISTING
IRRIGATION BACKFLOW PREVENTION DEVICE	-FEBCO-825Y-1"
ELECTRIC CONTROLLER	-HARDIE-RD-1200IN
RAIN SENSOR IN ENCLOSURE	-WATER CONSERVATION SYSTEMS-RG,RGVR-S
REMOTE CONTROL VALVES	-WEATHERMATIC-11000CR SERIES
QUICK COUPLING VALVES	-RAINBIRD-33LRC
DRIP CONTROL ASSEMBLY	-SEE DETAIL "L"
DRIP FLUSH VALVE	-SEE DETAIL "N"
TURF AREAS:	
4" POP-UP SPRAY HEADS-STANDARDS	-TORO-570Z-4P-COM-15H,T,Q,ADJ-PCD-080
4" POP-UP SPRAY HEADS-LOW GALLONAGE	-TORO-570Z-4P-COM-12F,H,T,Q
6" POP-UP SPRAY HEADS-LOW ANGLES	-TORO-570Z-6P-COM-10F,H
4" POP-UP SPRAY HEADS-STRIPS	-TORO-570Z-4P-COM- 4SST,E,EST
SHRUB/GROUND COVER AREAS:	
6" POP-UP SPRAY HEADS-STANDARDS	-TORO-570Z-6P-COM-15Q
6" POP-UP SPRAY HEADS-LOW ANGLES	-TORO-570Z-6P-COM-10F,H,Q
6" POP-UP SPRAY HEADS-FLATS	-TORO-570Z-6P-COM- 8F,H,T,Q
6" POP-UP SPRAY HEADS-FLATS-LOW GALLONAGE	-TORO-570Z-6P-COM- 5H,T
6" POP-UP SPRAY HEADS-STRIPS	-TORO-570Z-6P-COM- 4SST,EST
BUBBLERS-FLOODING	-TORO-514-20
SMUTFALLINE -3/4"	-SALCO A.R.PVC -3" COVER
DRIP HEADERLINE	-1120/CLASS 200 PVC PIPE -6" COVER
IRRIGATION SUPPLYLINE	-1120/SCHEDULE 40 PVC PIPE
IRRIGATION SPRINKLERLINE	-1120/CLASS 200 PVC PIPE
ELECTRICAL CONDUIT-SIZE AS INDICATED	-1120/SCHEDULE 40 PVC PIPE

NOTE: CIRCLED SIZE INDICATES ELECTRICAL CONDUIT.

CONTROLLER STATION NUMBER
GALLONS PER MINUTE THROUGH VALVE
CONTROL VALVE SIZE

IRRIGATION SCHEDULES

STA	PRECIP	OPERATING PRESSURE	RUN TIME	# OF CYC	CYC.	JAN	FEB	MAR	APR	MAY	JUN	JUL	AUG	SEP	OCT	NOV	DEC	ANN GAL	ANN CU FT
1	1.72	40	32	8	4	0	0	3	5	7	8	9	8	7	4	1	0	19,897	2,660
2	1.75	40	32	8	4	0	0	3	5	7	8	9	8	7	4	1	0	44,001	5,883
3	1.50	40	62	21	4	0	0	1	1	2	2	2	2	2	1	0	0	14,161	1,894
4	1.30	40	62	21	4	0	0	1	1	2	2	2	2	2	1	0	0	13,071	1,748
5	1.65	40	80	30	4	0	0	1	1	2	2	3	2	2	1	0	0	26,302	3,519
6	0.32	40	333	83	4	0	0	1	1	2	2	2	2	2	1	0	0	4,435	593
7	0.32	40	417	104	4	0	0	0	1	1	1	1	1	1	1	0	0	7,241	968
8	0.32	40	333	83	4	0	0	1	1	2	2	3	2	2	1	0	0	41,838	5,595
9	0.32	40	333	83	4	0	0	1	1	2	2	2	2	2	1	0	0	4,023	538
10	20.06	40	21	11	3	0	0	0	0	1	1	1	1	1	0	0	0	1,063	142
11	12.00	40	241	121	2	0	0	0	0	1	1	1	1	1	0	0	0	0	0
GAL.						584	520	9,528	15,770	24,293	28,436	29,626	26,891	23,701	13,642	4,239	456	176,025	23533
CU FT						91	110	1,274	2,108	3,248	3,934	3,961	3,596	3,169	1,816	567	61		

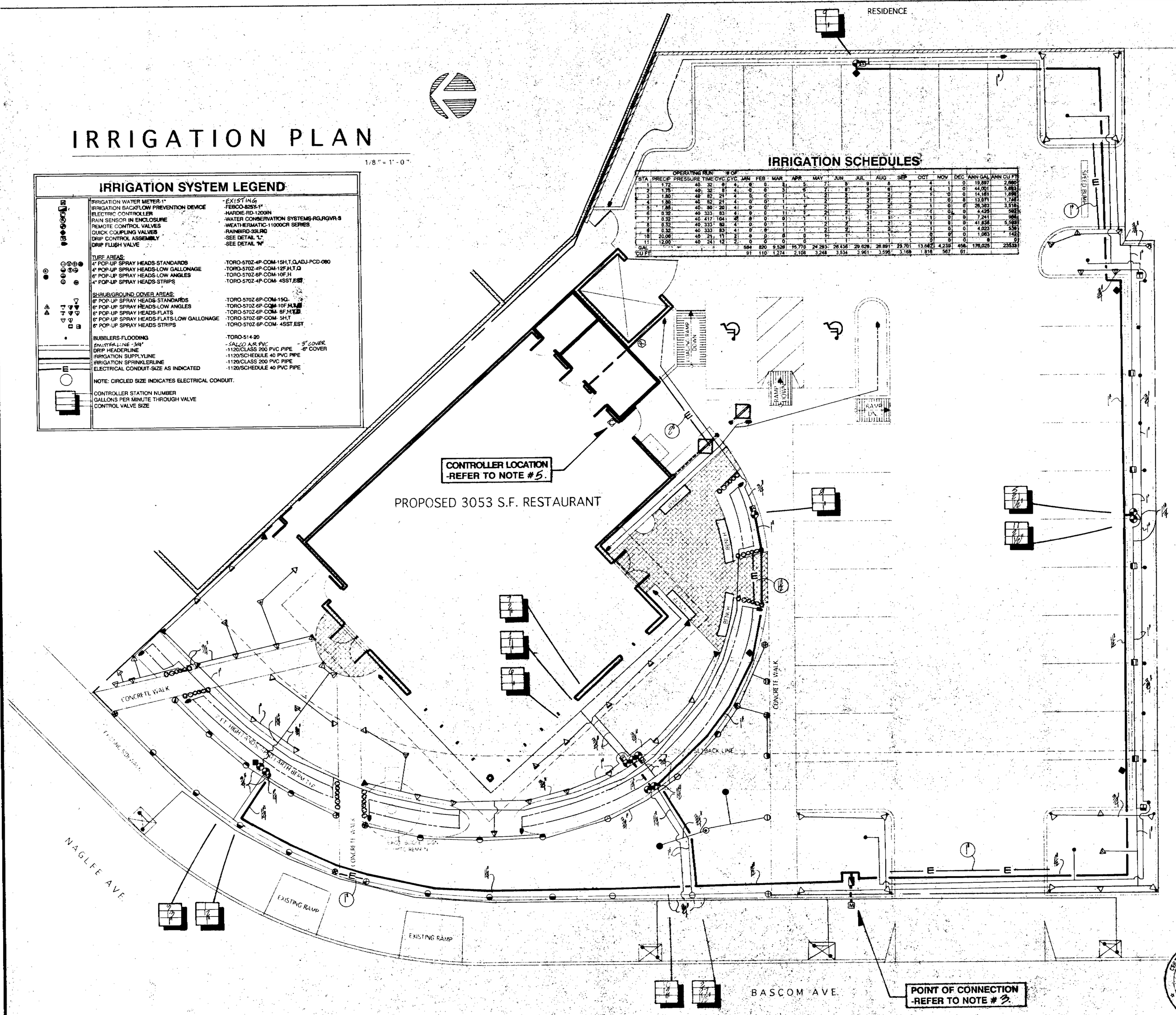

9672260

Copyright 1996
EDWIN BRIDGE ASSOCIATES. All designs drawings and written material appearing herein, are protected and constitute original and unpublished work of the Architect and may not be copied, reused, reused or disclosed without the written consent of the Architect. Equipment manufactured by others is excluded. Drawings and specifications are instruments of architectural service, and shall remain the property of the Architect. Use is restricted to the site for which they were prepared.

KFC

K.F.C. JENSEN

CORNER OF BASCOM AVE. AND NAGLEE AVE.
SAN JOSE CALIFORNIA

MAY 24, 1996	DATE
I.M.	DRAWN
1/8"=1'-0"	SCALE
9405	JOB NO.

I-1

1 OF

CERTIFIED IRRIGATION DESIGNER
IVY L. NIEDERLANDER
CERTIFICATE NO. 0020126

I.S.C. GROUP, INC. IRRIGATION SYSTEM CONSULTANTS
MEMBER-AMERICAN SOCIETY OF IRRIGATION CONSULTANTS
1799 Portola Avenue, Suite 2, Livermore, CA 94550
Phone 510/371-8230 Fax 510/371-8240

© All ideas, designs, and specifications represented are the property of I.S.C. Group, Inc. and are protected by copyright laws.

9603 9100

Copyright 1996
EDWIN BRUCE ASSOCIATES. All designs drawings and written material appearing herein, are protected and constitute original and unpublished work of the Architect and may not be copied, revised, re-used or disclosed without the written consent of the Architect. Equipment manufactured by others is excluded. Drawings and specifications are instruments of architectural service, and shall remain the property of the Architect. Use is restricted to the site for which they were prepared.

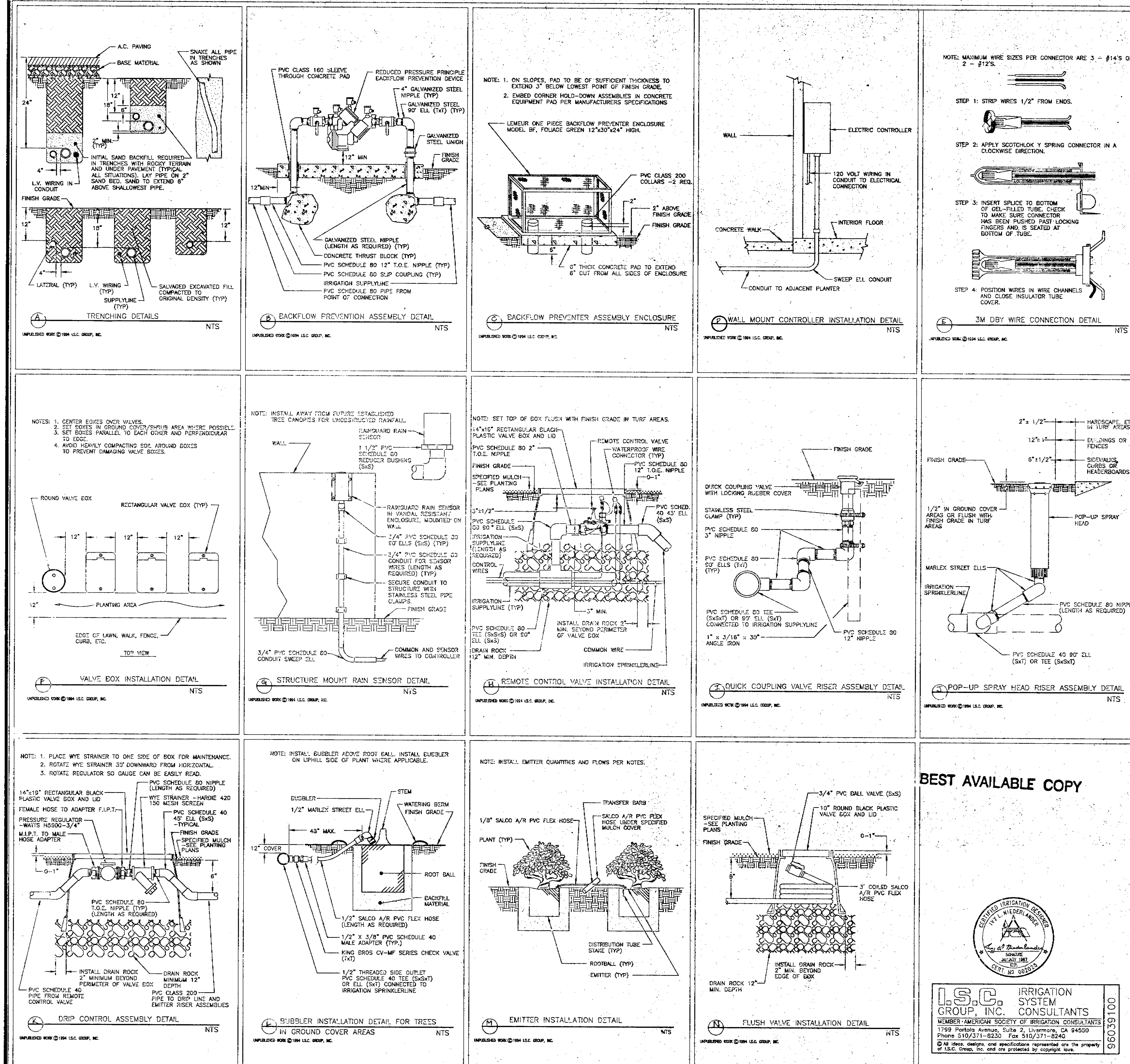

BEST AVAILABLE COPY

CERTIFIED IRRIGATION DESIGNER
IVY L. NIEDERLANDER
SIGNATURE
JANUARY 1997
EXP.
CERT. NO 002025

I.S.C. GROUP, INC. IRRIGATION SYSTEM CONSULTANTS
MEMBER-AMERICAN SOCIETY OF IRRIGATION CONSULTANTS
1799 Portola Avenue, Suite 2, Livermore, CA 94550
Phone 510/371-8230 Fax 510/371-8240
© All ideas, designs, and specifications represented are the property of I.S.C. Group, Inc. and are protected by copyright laws.

96039100

IRRIGATION SYSTEM NOTES

1. SPRINKLER SYSTEM IS ARE DESIGNED FOR A MAXIMUM OF 27 G.P.M. AT 40 P.S.I. STATIC PRESSURE OF P.S.I. AT VERIFY PRESSURE OF 40 P.S.I. AT THE POINT OF CONNECTION PRIOR TO INSTALLATION OF THE IRRIGATION SYSTEM. NOTIFY IRRIGATION CONSULTANT IF MEASURED PRESSURE IS MORE THAN 75P.S.I. OR LESS THAN 40 P.S.I.
2. A CONTINUITY TEST WILL BE REQUIRED FOR CONTROL WIRE STUBOUTS.
3. CONNECT TO 1" IRRIGATION WATER METER - *EXISTING*
4. INSTALL BACKFLOW PREVENTION DEVICE APPROXIMATELY WHERE INDICATED AS DETAILED AND ACCORDING TO LOCAL CODES. B.P.D. SHALL BE TESTED AND CERTIFIED PRIOR TO FINAL INSPECTION. CONTACT CITY OF SAN JOSE FOR TESTING COORDINATION.
5. INSTALL WALL MOUNT CONTROLLER IN MAINTENANCE ROOM WHERE INDICATED. EXACT LOCATION OF WALL MOUNT CONTROLLER TO BE DETERMINED AT JOBSITE BY ARCHITECT. 120 VOLT ELECTRICAL SUPPLY AND 2" CONDUIT THROUGH WALL IS PROVIDED FOR IN IMMEDIATE VICINITY IN ELECTRICAL SECTION OF CONTRACT. MAKE FINAL 120 VOLT ELECTRICAL CONNECTION. USE THIN WALL METAL CONDUIT ABOVE GRADE. PROGRAM CONTROLLERS TO NOT EXCEED MAXIMUM FLOW RATE STATED IN NOTE NO. 1. INSTALL PER MANUFACTURERS SPECIFICATIONS. PROVIDE AND INSTALL RECHARGEABLE BATTERY BACK-UP FOR CONTROLLER. INSTALL AS DETAILED. SEAL ALL CONDUIT HOLES WITH SILICONE OR EQUAL. PROGRAM CONTROLLER(S) TO IRRIGATE USING MULTIPLE REPEAT CYCLES OF SHORT DURATIONS. CARE SHALL BE TAKEN TO PREVENT RUNOFF OF WATER AND SLOPE/SOIL EROSION DUE TO PROLONGED APPLICATIONS OF WATER.
6. INSTALL RAIN SENSOR IN VANDAL RESISTANT ENCLOSURE AS DETAILED. ALL WIRING TO BE PER MANUFACTURERS SPECIFICATIONS. INSTALL SINGLE POLE SINGLE THROW (SPST) SWITCH ON 24 VAC LEAD GOING TO SENSOR TO PROVIDE OVERRIDE CAPABILITY.
7. INSTALL REMOTE CONTROL VALVES AND QUICK COUPLING VALVES AS DETAILED. INSTALL R.C.V. ID TAGS MANUFACTURED BY T. CHRISTY ENT. STANDARD SIZE, 1 1/8" HOT STAMPED BLACK LETTERS ON YELLOW BACKGROUND ON SOLENOID WIRES. LETTERS TO CONFORM TO CONTROLLER/STATION NUMBER.
8. ALL SPRINKLER HEADS SHALL HAVE RISER ASSEMBLIES AS DETAILED. INSTALL CHECK VALVES ON RISER ASSEMBLIES WHERE LOW HEAD DRAINAGE OCCURS. NOTE ESPECIALLY TO AVOID DRAINAGE AT SIDEWALKS AND OTHER POINTS WHERE PUDDLING WILL CAUSE DAMAGE OR HAZARD. ALL HIGH POP-UPS ADJACENT TO CURBS SHALL BE INSTALLED AT PAINTED PARKING STALL LINES. LEAN SPRINKLER HEADS ON SLOPES (ANGLE VARIES DEPENDING UPON TRAJECTORY OF SPRAY AND DEGREE OF SLOPE) TO MAXIMIZE UPHILL THROW. INSTALL FLOOD BUBBLERS ON UP HILL SIDE OF TREES.
9. THROTTLE FLOW CONTROL AT VALVES FOR OPTIMUM OPERATION. WHEN THROTTLING IS NOT USED TO CONTROL MISTING OR OVERSPRAY, BACK-OFF MANUAL FLOW CONTROL 1/2 TO 1 1/2 TURNS FROM POINT WHERE CLOSING AFFECTS SPRINKLER COVERAGE. ADJUST ALL BUBBLERS AT SPECIMEN TREES AS REQUIRED FOR DEEP ROOT WATERING.
10. CONTRACTOR HAS THE OPTION TO INSTALL PVC SCHEDULE 40 SLEEVING FOR ALL PIPING UNDER ASPHALT AND CONCRETE PAVEMENTS AT HIS OWN EXPENSE.
11. EMITTER LINE SHOWN IS DIAGRAMMATIC ONLY. PLACE LINE BETWEEN PLANTS AND RUN DISTRIBUTION TUBING TO PLANT. INSTALL PER MANUFACTURER'S RECOMMENDATIONS. INSTALL SALCO EMITTERS AS FOLLOWS:
    A. 1 PCC-.5 EMITTER AT EACH ONE GALLON PLANT
    B. 1 PCC-1 EMITTER AT EACH FIVE GALLON PLANT
    C. 2 PCC-1 EMITTERS AT EACH FIFTEEN GALLON PLANT (180 DEGREES APART)
    D. 4 PCC-1 EMITTERS AT EACH 24" BOX TREE (90 DEGREES APART)
    E. INSTALL EMITTERS ON UP GRADE SIDE OF PLANTS WHERE APPLICABLE.
    F. INSTALL EMITTERS ABOVE ALL ROOTBALLS (UNLESS DIRECTED OTHERWISE).
12. AFTER INSTALLATION OF DRIP CONTROL ASSEMBLY (OR PRESSURE REGULATING CONTROL VALVE) SET PRESSURE AT 25 P.S.I.
13. PROVIDE THE FOLLOWING MATERIALS TO THE OWNER:
    A. SALCO HP-125 HOSE PUNCH (OR HOLLOW CORE HOLE PUNCH)
    B. 15 EMITTERS (EACH FLOW RATE)
    C. 25 INSECT PLUGS (SALCO-EOCV)
    D. 25 GOOF PLUGS (SALCO-GF-125)
    E. 50' - DISTRIBUTION TUBING
    F. 15 COUPLINGS FOR DRIP LINE (FOR EACH SIZE USED)
    G. 50' SALCO A/R PVC FLEX HOSE (FOR EACH SIZE USED)
    H. 25 TRANSFER BARBS
    I. 795 PVC GLUE
14. PROVIDE LITERATURE OF ALL DRIP SYSTEM COMPONENTS INCLUDING ANY PREVENTATIVE MAINTENANCE AND TROUBLE SHOOTING GUIDES TO OWNER AND REVIEW MAINTENANCE PROCEDURES INCLUDING:
    A. CLEANING FILTER IN WYE STRAINER(S)
    B. REPAIRING BREAKS IN PIPE(S)
    C. USING FLUSH VALVES TO FLUSH OUT LINE(S)
    D. ADDING EMITTERS AND TUBING FOR EXPANSION/INSTALLING PLUGS
    E. INSPECTION OF EMITTERS AND OUTLETS
15. USE SALCO HOSE PUNCH #HP-125 OR HOLLOW CORE HOLE PUNCH.
16. MAINTENANCE CONSIDERATIONS:
    A. FILTER CLEANING AND FLUSHING SHOULD START OUT AS A MONTHLY PROCEDURE (OR MORE FREQUENTLY FOR DIRTY WATER SITUATIONS) AND ADJUST TIMING AS APPROPRIATE.
    B. VISUALLY CHECK FOR INDICATIONS OF PIPE BREAKS OR CLOGGED EMITTERS OR OUTLETS ON A REGULAR BASIS.
    C. DURING WINTER MONTHS, WHEN THE SYSTEM IS NOT IN USE, THE DRIP SYSTEM(S) SHOULD BE RUN ABOUT EVERY 2 WEEKS FOR A 2-4 MINUTE MINIMUM RUNTIME. (EXCEPT IN FREEZING AREAS)
17. REFER TO SPECIFICATIONS FOR FURTHER INFORMATION REGARDING THIS PROJECT.

IRRIGATION SCHEDULE NOTES

1. THESE IRRIGATION SCHEDULES REPRESENTING MONTHLY FREQUENCIES ARE BASED ON THE IRRIGATION SYSTEM'S ATTRIBUTES ARE ONLY GUIDELINES FOR PROGRAMMING CONTROLLERS. THESE SCHEDULES TAKE INTO ACCOUNT HISTORICAL WEATHER DATA AND ESTIMATES OF SOIL COMPOSITION, PLANT TRANSPIRATION CHARACTERISTICS AND IRRIGATION SYSTEM UNIFORMITY. SINCE RUN TIMES ARE BASED ON AVERAGE HISTORICAL WEATHER DATA FOR A PARTICULAR REGION, THE PROGRAMS SHOULD BE ADJUSTED TO REFLECT ACTUAL VARIATIONS IN THE WEATHER. IDEALLY ADJUSTMENTS SHOULD BE MADE FOR EACH WATERING CYCLE; HOWEVER, WEEKLY ADJUSTMENTS ARE ACCEPTABLE, MONTHLY ADJUSTMENTS BEING THE MINIMUM REQUIREMENT, IN ORDER TO AFFECT SIGNIFICANT WATER SAVINGS. IN ADDITION TO MAKING THESE ADJUSTMENTS, THE GROUNDS SHOULD BE MONITORED REGULARLY TO ASSESS THE ESTIMATED SCHEDULE AND THE CONTROLLER PROGRAMS SHOULD BE "TUNED" TO ADJUST TO SITE CONDITIONS AS FOLLOWS:
    A. WATER DEPLETION WILL RESULT AT VARIED RATES WITH SOIL TYPES AND PLANT ROOT DEPTHS. ADJUST FREQUENCY OF IRRIGATION TO COMPENSATE. NO SOIL REPORTS WERE AVAILABLE; SOIL IS ASSUMED TO BE CLAY-LOAM TEXTURE, THE PREDOMINATE SOIL TYPE OF THE AREA.
    B. PRESENTLY THERE IS MINIMAL RESEARCH DATA AVAILABLE QUANTIFYING AMOUNTS AND FREQUENCY OF WATER REQUIREMENTS FOR ORNAMENTAL TREES, SHRUBS AND GROUND COVERS. WE REFERRED TO THE W.U.C.O.L.S LIST FOR THIS INFORMATION. IRRIGATION OF TREES, SHRUBS AND GROUND COVERS SHOULD BE MONITORED AND ADJUSTED AS IS PERMISSIBLE. WATER REQUIREMENTS OF THESE ORNAMENTAL PLANTINGS VARY WITH SPECIFIC TYPES OF PLANTS. A PERIODIC INSPECTION AND MONITORING PROGRAM OF ROOT MOISTURE LEVELS THROUGH THE USE OF A SOIL PROBE SHOULD BE IMPLEMENTED.
    C. THE AMOUNT OF WATER REQUIRED TO BE APPLIED DEPENDS ON THE CONDITION OF THE IRRIGATION SYSTEM. FACTORS WHICH WERE NOT CONSIDERED IN THE DEVELOPMENT OF THESE SCHEDULES BUT WHICH SHOULD BE CONSIDERED WHEN MONITORING THE IRRIGATION SYSTEM ARE WHETHER OR NOT THE SYSTEM IS INSTALLED AS DESIGNED AND MAINTAINED AS REQUIRED.
    D. EMPIRICAL ESTIMATES WERE MADE CONSIDERING THE AFFECT OF SHADE, WIND EXPOSURE, AND SLOPES ON WATERING REQUIREMENTS. AS WITH THE OTHER FACTORS MENTIONED, THE GROUNDS SHOULD ALSO BE MONITORED TO "TUNE" THE PROGRAM FOR THESE FACTORS.
2. IF PRECIPITATION RATE EXCEEDS INFILTRATION RATE OF SOIL, MULTIPLE START TIMES ARE REQUIRED TO AVOID RUNOFF.
3. THIS SCHEDULE IS FOR ESTABLISHED PLANT MATERIAL ONLY. PLANT MATERIAL DURING ESTABLISHMENT PERIOD WILL REQUIRE MORE WATER AT MORE FREQUENT INTERVALS. THE WATERING FREQUENCIES SHOULD BE DECREASED AS THE PLANT MATERIAL BECOMES ESTABLISHED. IT IS ESPECIALLY IMPORTANT TO KEEP SOD LAWNS AND GROUND COVER ROOTS MOIST THROUGHOUT ESTABLISHMENT PERIOD. TREES IN OVERHEAD SPRAY AREAS WILL REQUIRE DEEP ROOT WATERING USING THE BUBBLERS THROUGHOUT THEIR ESTABLISHMENT PERIODS (THE ESTABLISHMENT PERIODS FOR THE TREES WILL VARY DEPENDING UPON SPECIES AND CLIMATE). AFTER THE ESTABLISHMENT PERIOD, A SCHEDULE FOR SUPPLEMENTAL WATER FROM THE OVERHEAD SPRAY SYSTEM TO CONTINUE TO PROVIDE DEEP ROOT WATERING FOR THE TREES MAY BE REQUIRED.

KFC

K.F.C. JENSEN

CORNER OF BASCOM AVE. AND NAGLEE AVE.
SAN JOSE CALIFORNIA

MAY 24, 1996	DATE
I.M.	DRAWN
NONE	SCALE
9405	JOB NO.

10
9672260

I-2
1 OF

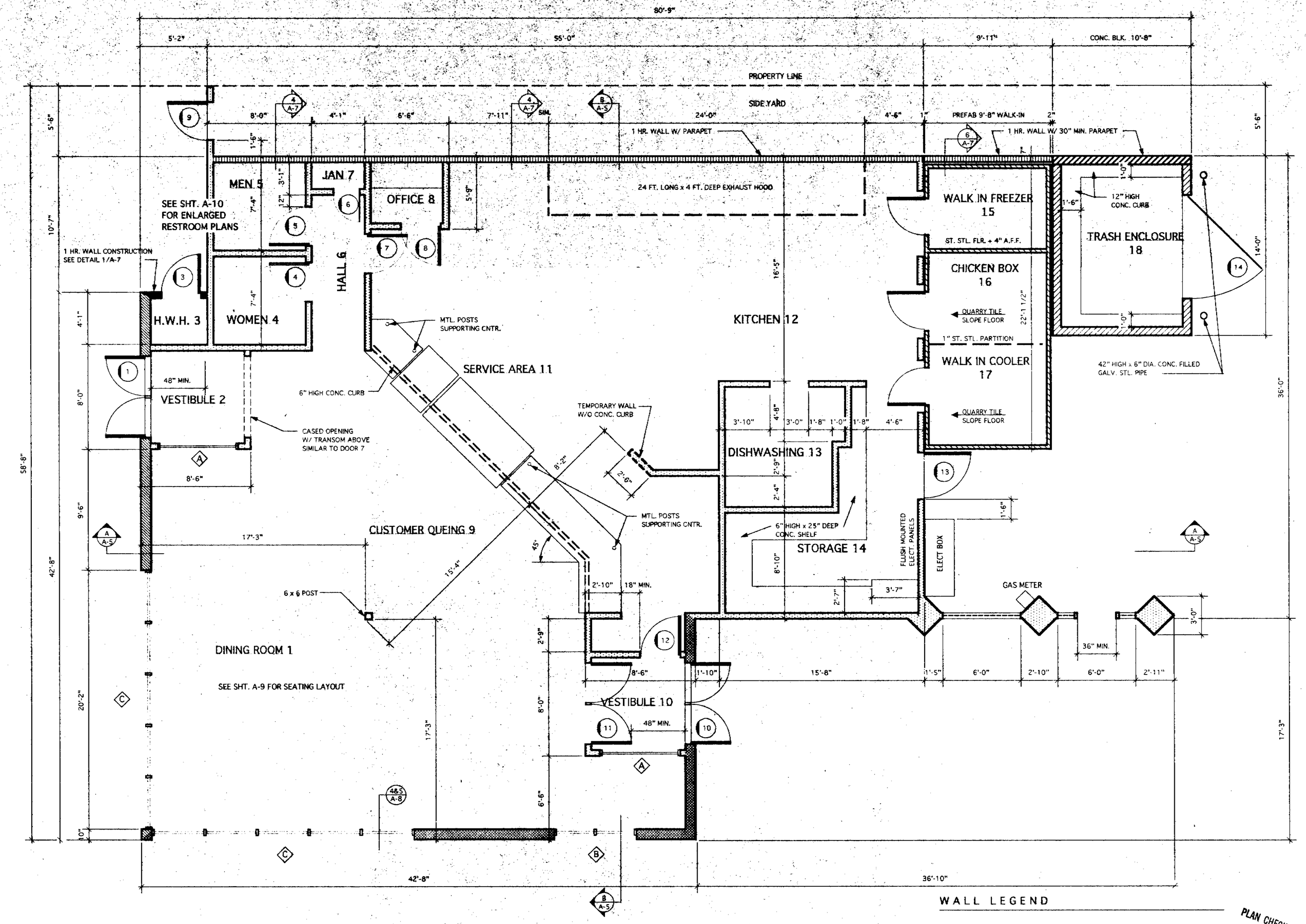

NOTE:
DIMENSIONS ARE TO FACE OF STUD U.N.O.

WALL LEGEND

- 2 x 10 WOOD STUDS AT 16" O.C.
- 2 x 6 WOOD STUDS AT 16" O.C.
- 1 HR. WALL, SEE DETAIL 1/A-7
- 1 HR. WALL W/ PARAPET, SEE DETAILS 4 & 6 ON SHT. A-7
- 4" PREFAB WALK-IN COOLER/FREEZER WALLS
- 8" C.M.U. BLOCK WALL
- 8" C.M.U. BLOCK WALL W/ PARAPET 30" MIN. ABOVE ROOF LINE

PLAN CHECK APPROVAL
AUG 0 9 1996
KUTZMANN & ASSOCIATES

9672260

FLOOR PLAN

2840 S.F. BUILDING PLUS 213 S.F. WALK-IN TOTALLING 3053 S.F.

Copyright 1996
EDWIN BRUCE ASSOCIATES. All designs drawings, and written material appearing herein, are protected and constitute original and unpublished work of the Architect and may not be copied, revised, re-used or disclosed without the written consent of the Architect. Equipment manufactured by others is excluded. Drawings and specifications are instruments of architectural service, and shall remain the property of the Architect. Use is restricted to the site for which they were prepared.

EDWIN BRUCE
Associates
Architects
A.I.A.
1625 The Alameda
Suite 610
San Jose, CA.
95126
Ph. 408/995 5701
Fax 408/995 5022

LICENSED ARCHITECT EDWIN G. BRUCE NO. C-14598 REN. 6-31-09 STATE OF CALIFORNIA

KFC

K.F.C. JENSEN
CORNER OF BASCOM AVE. AND NAGLEE AVE.
SAN JOSE CALIFORNIA

MAY 24, 1996	DATE
D.C.	DRAWN
1/4" = 1'-0"	SCALE
9405	JOB NO.

A-1

11 OF ....

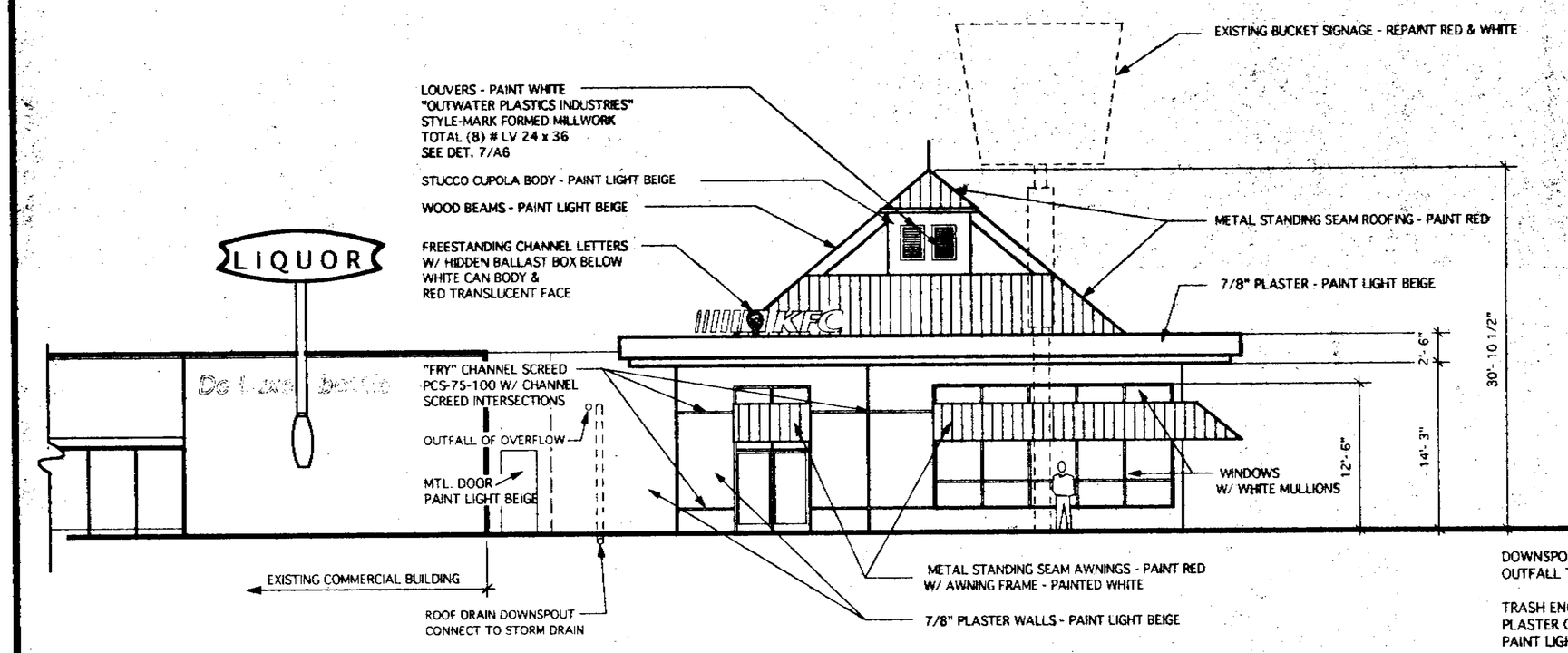

WEST ELEVATION

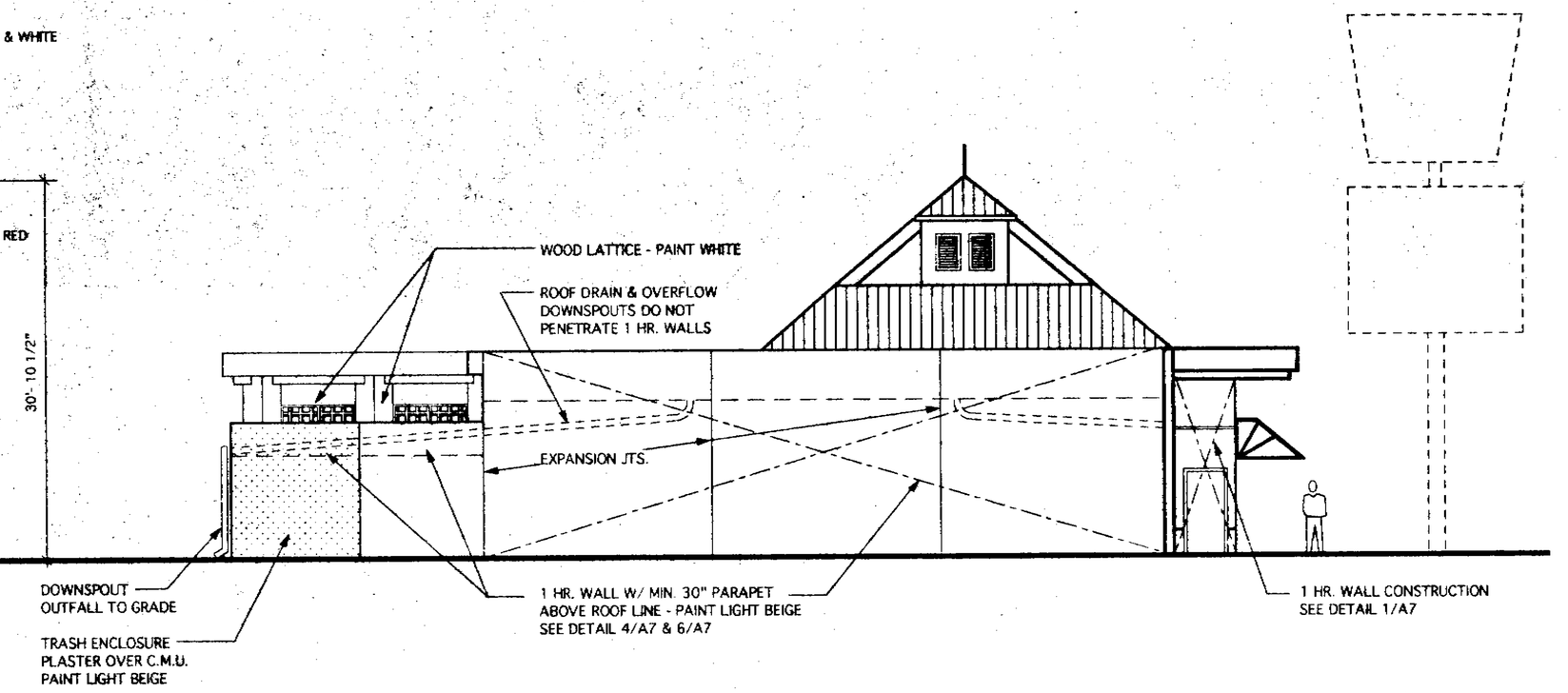

NORTH ELEVATION

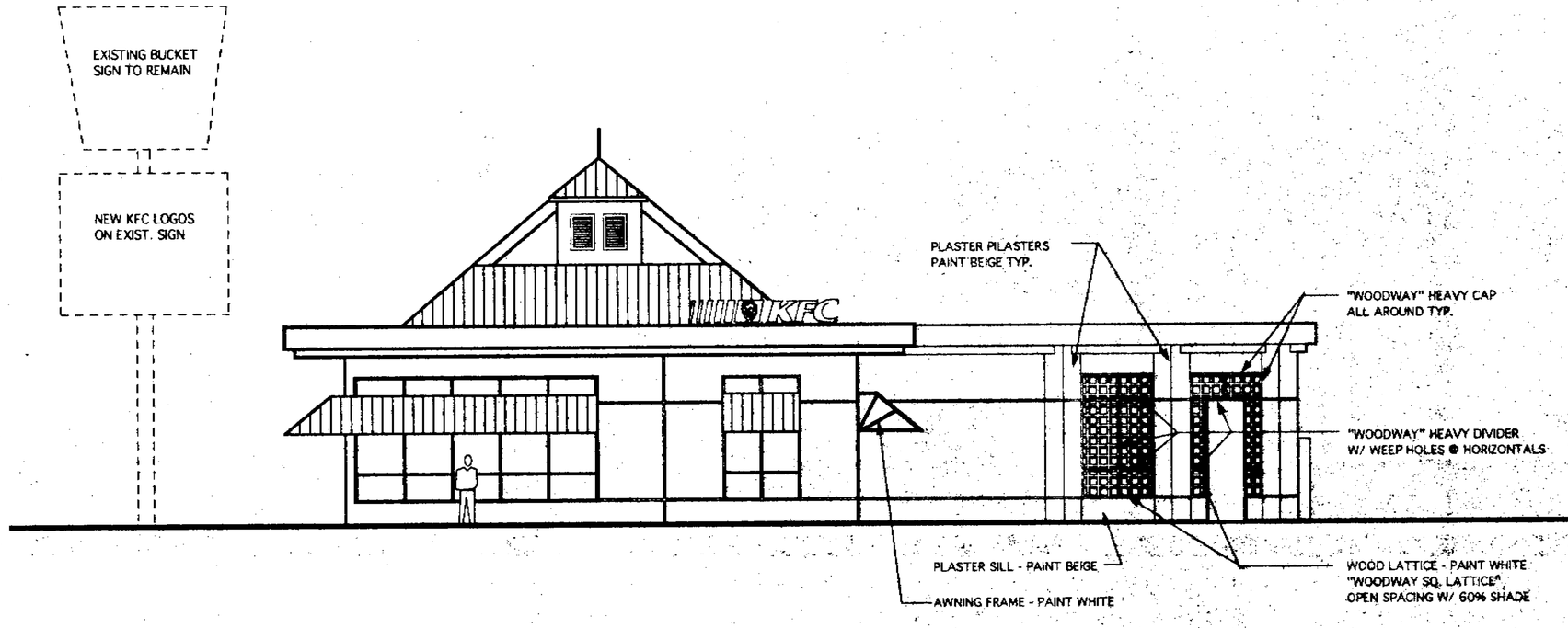

SOUTH ELEVATION

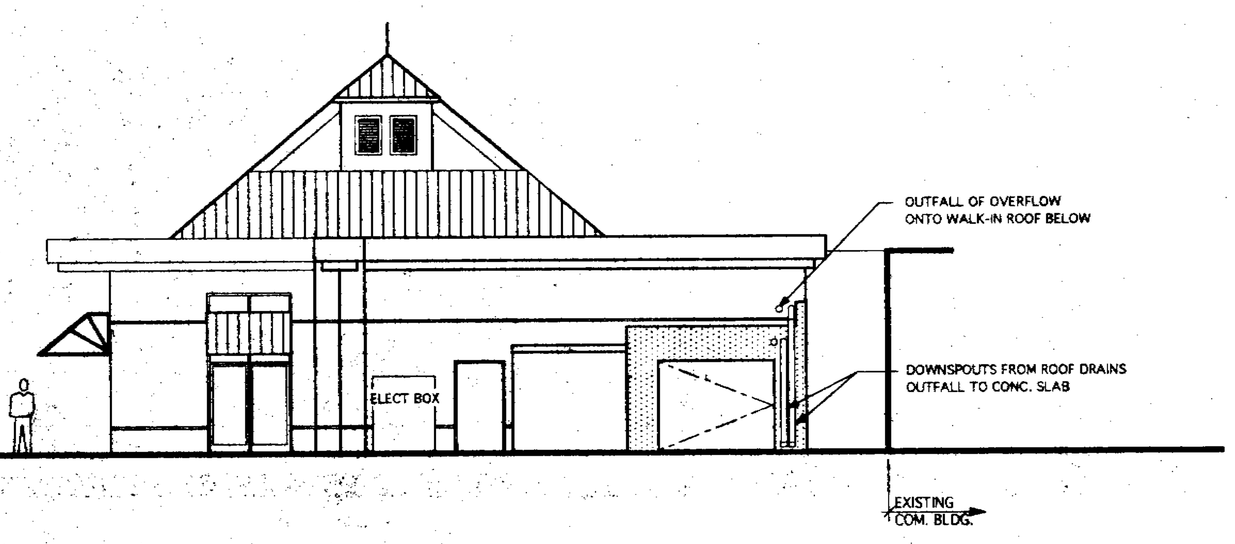

EAST ELEVATION

PLAN CHECK APPROVAL
AUG 09 1996
KUTZMANN & ASSOCIATES

9672280
12

Copyright 1996
EDWIN BRUCE ASSOCIATES. All designs drawings, and written material appearing herein, are protected and constitute original and unpublished work of the Architect and may not be copied, revised, re-used or disclosed without the written consent of the Architect. Equipment manufactured by others is excluded. Drawings and specifications are instruments of architectural service, and shall remain the property of the Architect. Use is restricted to the site for which they were prepared.

EDWIN BRUCE
Associates
Architects
A.I.A.
1625 The Alameda
Suite 610
San Jose, CA.
95126
Ph. 408/995 5701
Fax 408/995 5022

LICENSED ARCHITECT
EDWIN C. BRUCE
NO. C-14288
REN. 6-31-97
STATE OF CALIFORNIA

KFC

K.F.C. JENSEN

CORNER OF BASCOM AVE. AND NAGLEE AVE.
SAN JOSE
CALIFORNIA

JULY 22, 1996	DATE
D.C.	DRAWN
1/4 = 1'-0"	SCALE
9405	JOB NO.

A-2
OF 46

Copyright 1996
EDWIN BRUCE ASSOCIATES. All designs drawings, and written material appearing herein, are protected and constitute original and unpublished work of the Architects and may not be copied, revised, re-used or disclosed without the written consent of the Architect. Equipment manufactured by others is excluded. Drawings and specifications are instruments of architectural service, and shall remain the property of the Architect. Use is restricted to the site for which they were prepared.

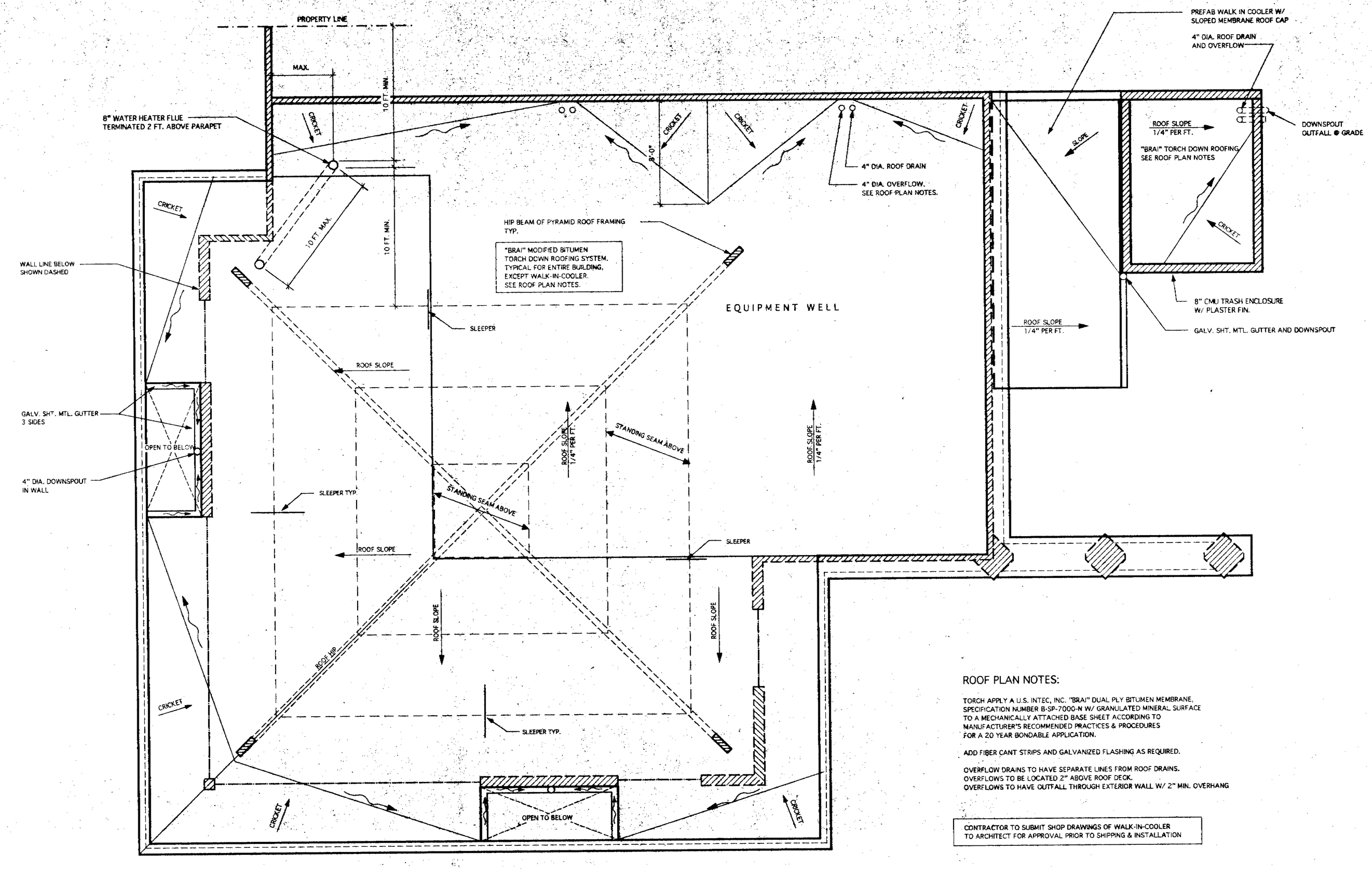

ROOF PLAN NOTES:

TORCH APPLY A U.S. INTEC, INC. "BRAI" DUAL PLY BITUMEN MEMBRANE, SPECIFICATION NUMBER B-SP-7000-N W/ GRANULATED MINERAL SURFACE TO A MECHANICALLY ATTACHED BASE SHEET ACCORDING TO MANUFACTURER'S RECOMMENDED PRACTICES & PROCEDURES FOR A 20 YEAR BONDABLE APPLICATION.

ADD FIBER CANT STRIPS AND GALVANIZED FLASHING AS REQUIRED.

OVERFLOW DRAINS TO HAVE SEPARATE LINES FROM ROOF DRAINS.
OVERFLOWS TO BE LOCATED 2" ABOVE ROOF DECK.
OVERFLOWS TO HAVE OUTFALL THROUGH EXTERIOR WALL W/ 2" MIN. OVERHANG

CONTRACTOR TO SUBMIT SHOP DRAWINGS OF WALK-IN-COOLER TO ARCHITECT FOR APPROVAL PRIOR TO SHIPPING & INSTALLATION

PLAN CHECK APPROVAL
AUG 0 4 1996
KUTZMANN & ASSOCIATES

9672260
13

EDWIN BRUCE
Associates
Architects
A.I.A.
1625 The Alameda
Suite 610
San Jose, CA.
95126
Ph. 408/995 5701
Fax 408/995 5022

LICENSED ARCHITECT EDWIN BRUCE NO. C-14586 REN. 5-31-96 STATE OF CALIFORNIA

KFC

K.F.C. JENSEN

CORNER OF BASCOM AVE. AND NAGLEE AVE.
SAN JOSE CALIFORNIA

JULY 22, 1996	DATE
D.C.	DRAWN
1/4" = 1'-0"	SCALE
9405	JOB NO.

A-3

OF 46

NOTE:

MAIN RUNNERS ARE LOCATED 48" O. C. . MAIN RUNNERS ARE TO BE SUPPORTED @ 48" O. C. MAX. W/ 12 GA. DOUBLE WIRE LOOPS. 12 GA. SPLAY WIRES AND COMPRESSION POSTS TO BE LOCATED 12 FT. MAX.. PERIMETER TO BE SUPPORTED 3" FROM EDGES OF BOTH MAIN RUNNERS AND CROSS T'S W/ 12 GA. WIRES. BRACING WIRES ARE TO BE 45° IN BOTH DIRECTIONS. CEILING TO BE INSTALLED IN ACCORDANCE TO U. B. C. SECTION 47 - 18.

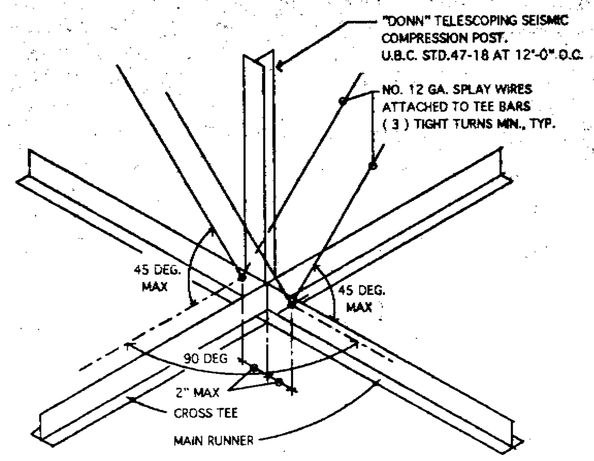

1 CEILING BRACE ISOMETRIC SCALE : N. T. S.

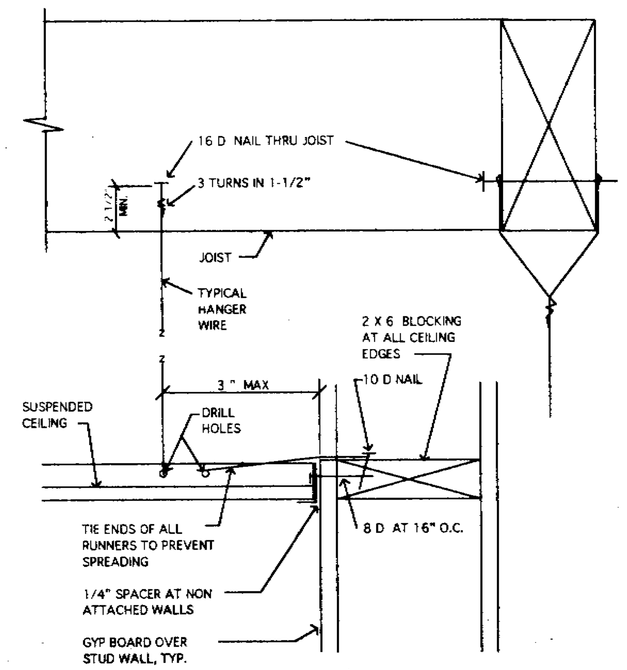

2 CEILING TO WALL DETAIL SCALE : N. T. S.

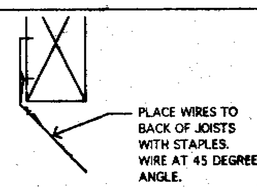

CEILING BRACE WIRES
@ ROOF/CEILING JOISTS

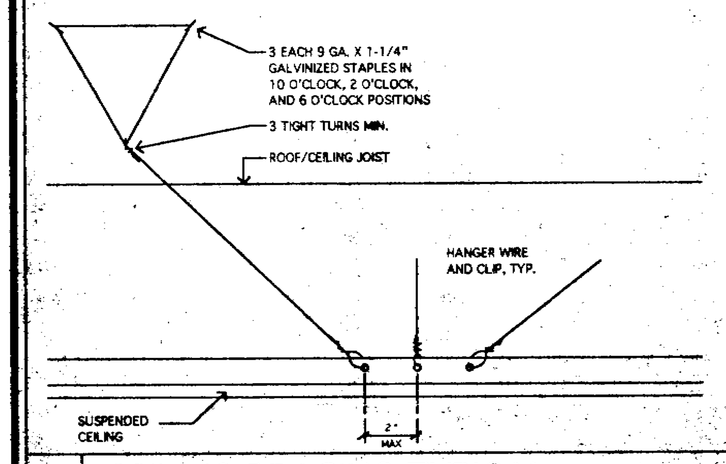

3 CEILING BRACING TYPICAL SCALE : N. T. S.

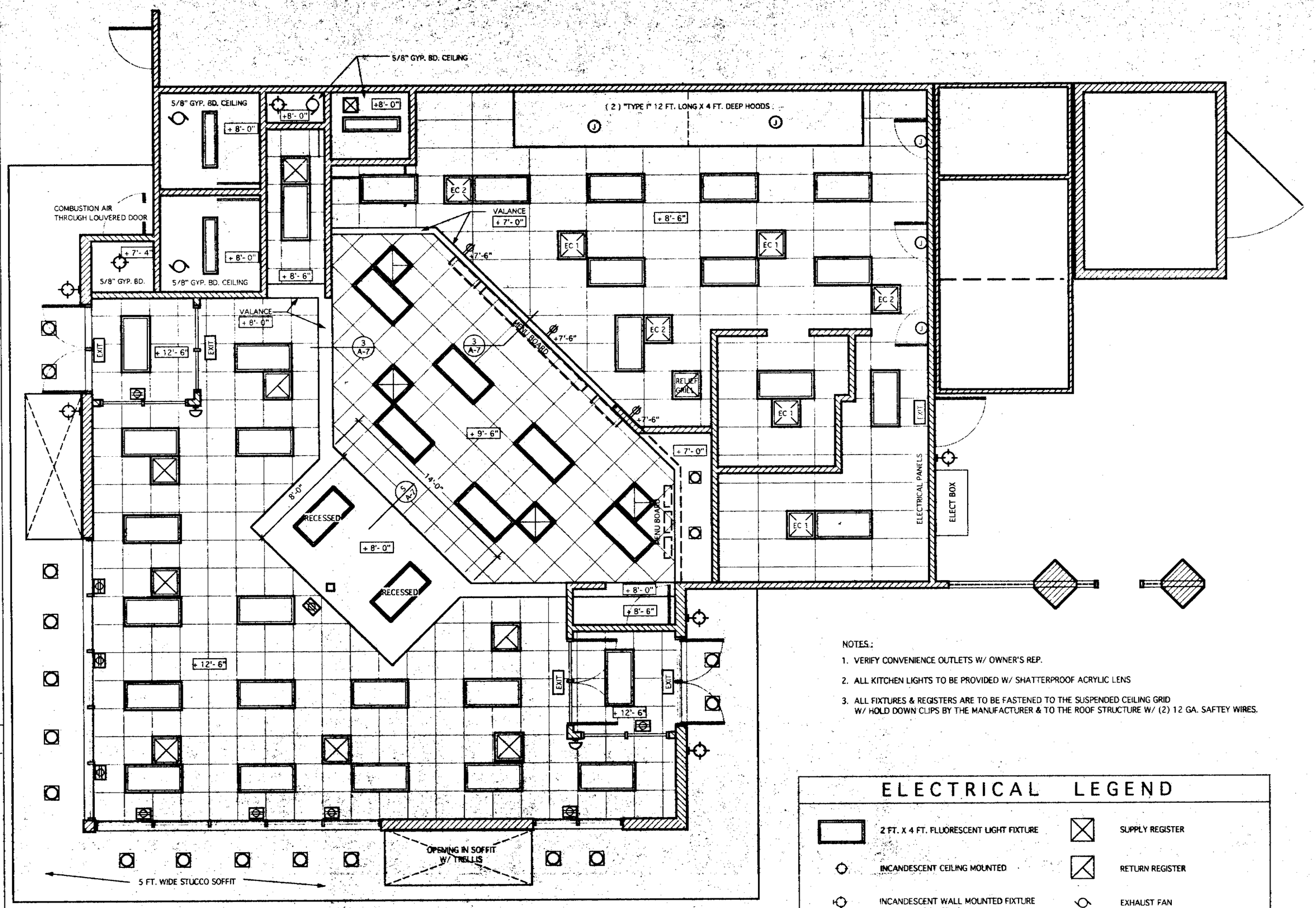

NOTES.:

1. VERIFY CONVENIENCE OUTLETS W/ OWNER'S REP.
2. ALL KITCHEN LIGHTS TO BE PROVIDED W/ SHATTERPROOF ACRYLIC LENS
3. ALL FIXTURES & REGISTERS ARE TO BE FASTENED TO THE SUSPENDED CEILING GRID W/ HOLD DOWN CLIPS BY THE MANUFACTURER & TO THE ROOF STRUCTURE W/ (2) 12 GA. SAFTEY WIRES.

ELECTRICAL LEGEND

2 FT. X 4 FT. FLUORESCENT LIGHT FIXTURE	SUPPLY REGISTER
INCANDESCENT CEILING MOUNTED	RETURN REGISTER
INCANDESCENT WALL MOUNTED FIXTURE FOR EXTERIOR USE	EXHAUST FAN
WALL SCONCE	ILLUMINATED " EXIT " SIGN
RECESSED DOWNLIGHT	DUPLEX OUTLET CEILING MOUNTED
	DUPLEX OUTLET @ 7'-6" A.F.F.
	JUNCTION BOX FOR MFTR. LIGHTS

PLAN CHECK APPROVAL
AUG 09 1996
KUTZMANN & ASSOCIATES

REFLECTED CEILING PLAN

1/4" = 1' - 0"

9672260
19

Copyright 1996
EDWIN BRUCE ASSOCIATES. All designs drawings and written material appearing herein, are protected and constitute original and unpublished work of the Architect and may not be copied, revised, re-used or disclosed without the written consent of the Architect. Equipment manufactured by others is excluded. Drawings and specifications are instruments of architectural service, and shall remain the property of the Architect. Use is restricted to the site for which they were prepared.

EDWIN BRUCE
Associates
Architects
A.I.A.
1625 The Alameda
Suite 610
San Jose, CA.
95126
Ph. 408/995 5701
Fax 408/995 5022

LICENSED ARCHITECT EDWIN D. BRUCE NO. C-14896 EXP. 5-31-97 STATE OF CALIFORNIA

KFC

K.F.C. JENSEN
CORNER OF BASCOM AVE. AND NAGLEE AVE.
SAN JOSE CALIFORNIA

JULY 22, 1996	DATE
D.C.	DRAWN
1/4 = 1'-0"	SCALE
9405	JOB NO.

A-4

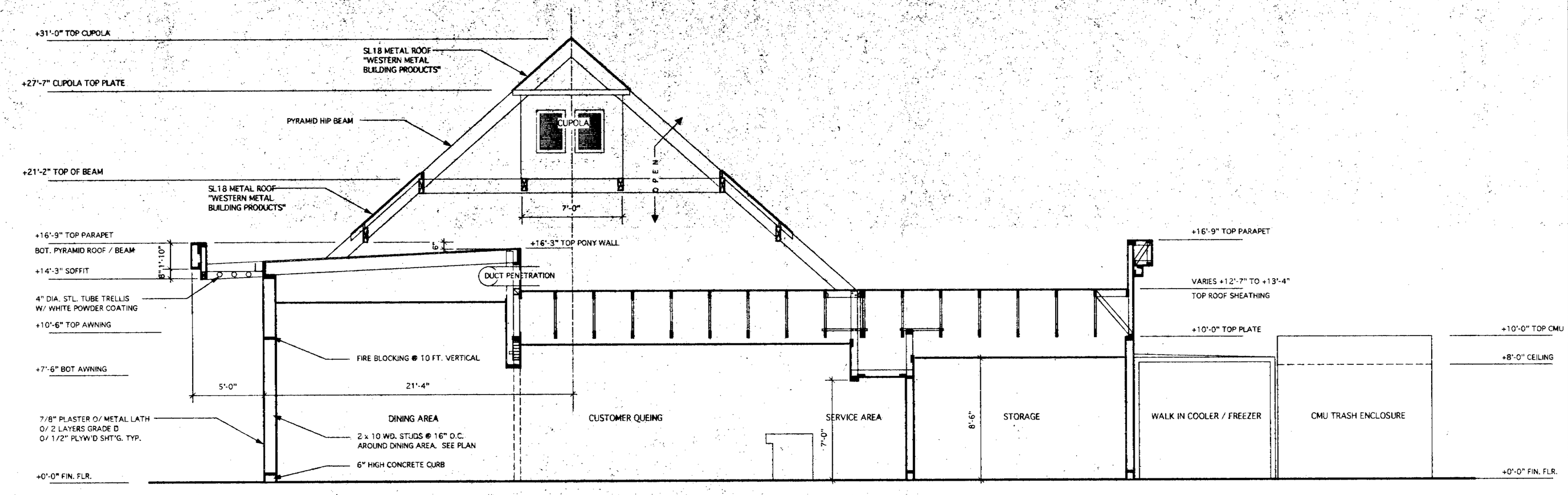

BUILDING SECTION A-A

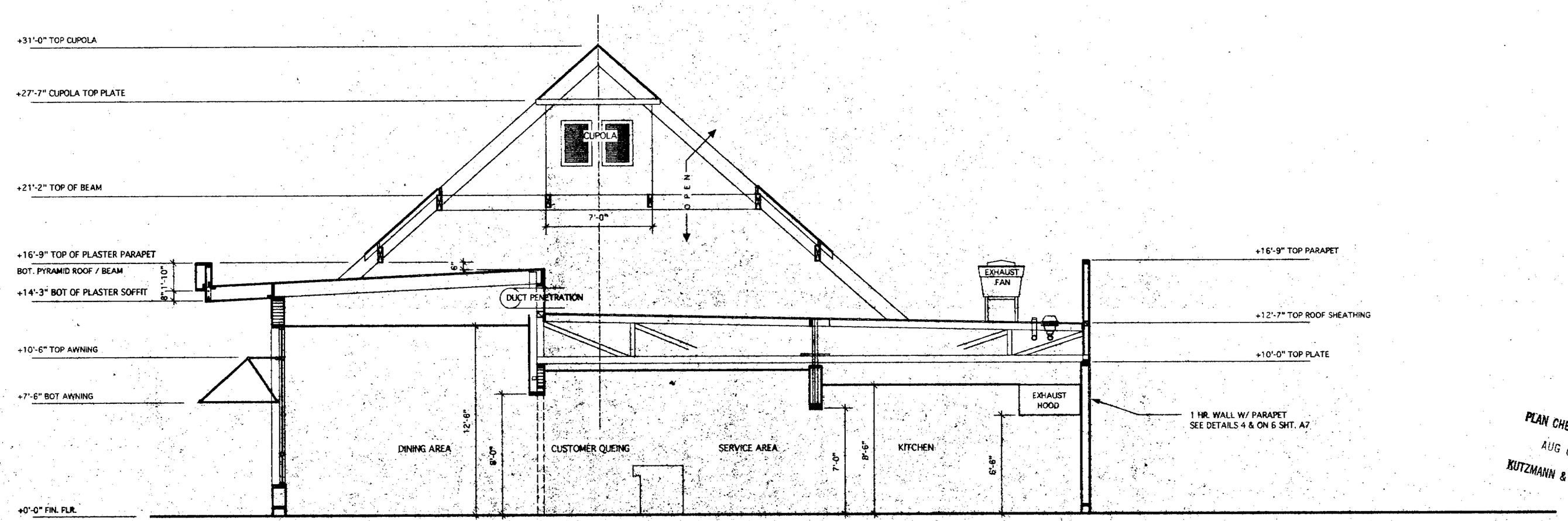

BUILDING SECTION B-B

PLAN CHECK APPROVAL
AUG 09 1996
KUTZMANN & ASSOCIATES

9672260
15

Copyright 1996
EDWIN BRUCE ASSOCIATES. All designs drawings, and written material appearing herein, are protected and constitute original and unpublished work of the Architect and may not be copied, revised, re-used or disclosed without the written consent of the Architect. Equipment manufactured by others is excluded. Drawings and specifications are instruments of architectural service, and shall remain the property of the Architect. Use is restricted to the site for which they were prepared.

EDWIN BRUCE
Associates
Architects
A.I.A.
1625 The Alameda
Suite 610
San Jose, CA.
95126
Ph. 408/995 5701
Fax 408/995 5022

LICENSED ARCHITECT EDWIN C. BRUCE NO. C-12696 REN. 5-31-97 STATE OF CALIFORNIA

KFC

K.F.C. JENSEN

CORNER OF BASCOM AVE. AND NAGLEE AVE.
SAN JOSE
CALIFORNIA

JULY 22, 1996	DATE
D.C.	DRAWN
1/4 = 1'-0"	SCALE
9405	JOB NO.

A-5

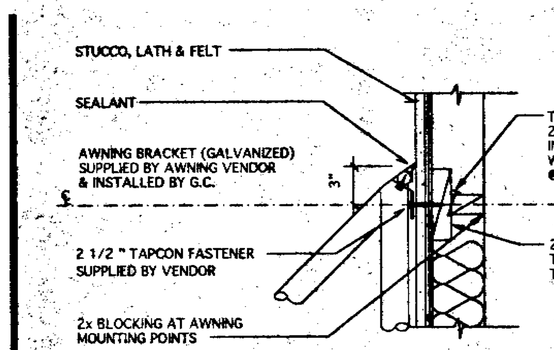

5 AWNING ANCHORAGE 1 1/2" = 1'-0"

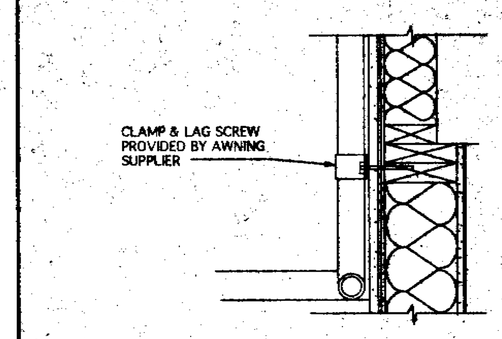

4 AWNING ANCHORAGE 1 1/2" = 1'-0"

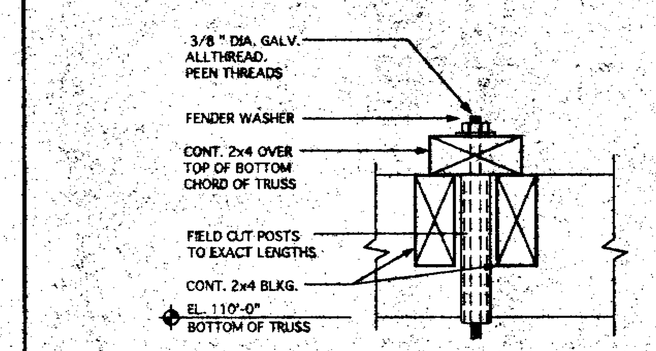

3 CEILING HUNG SHELF SCALE 1 1/2" = 1'-0"

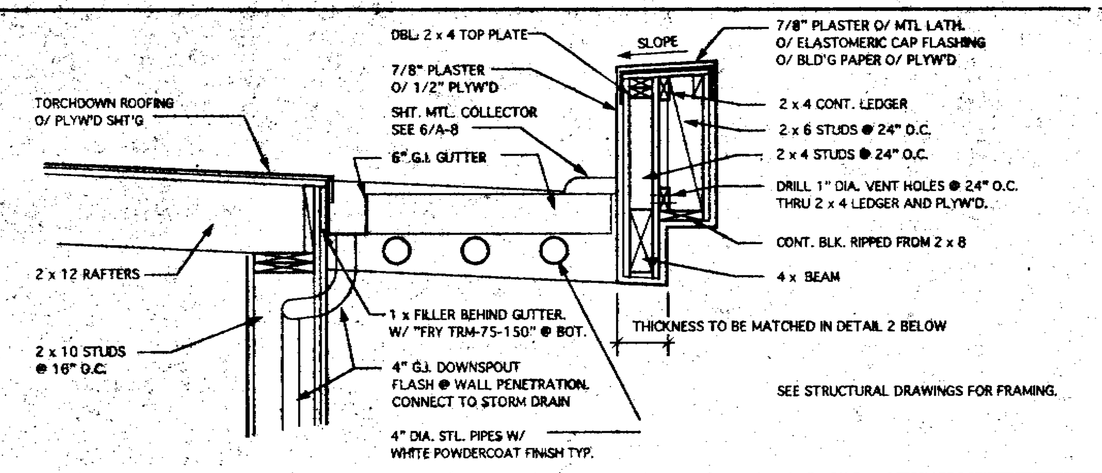

1 DINING RM. WALL SECTION SCALE 1 1/2" = 1'-0"

7 LOUVER ANCHORAGE 1 1/2" = 1'-0"

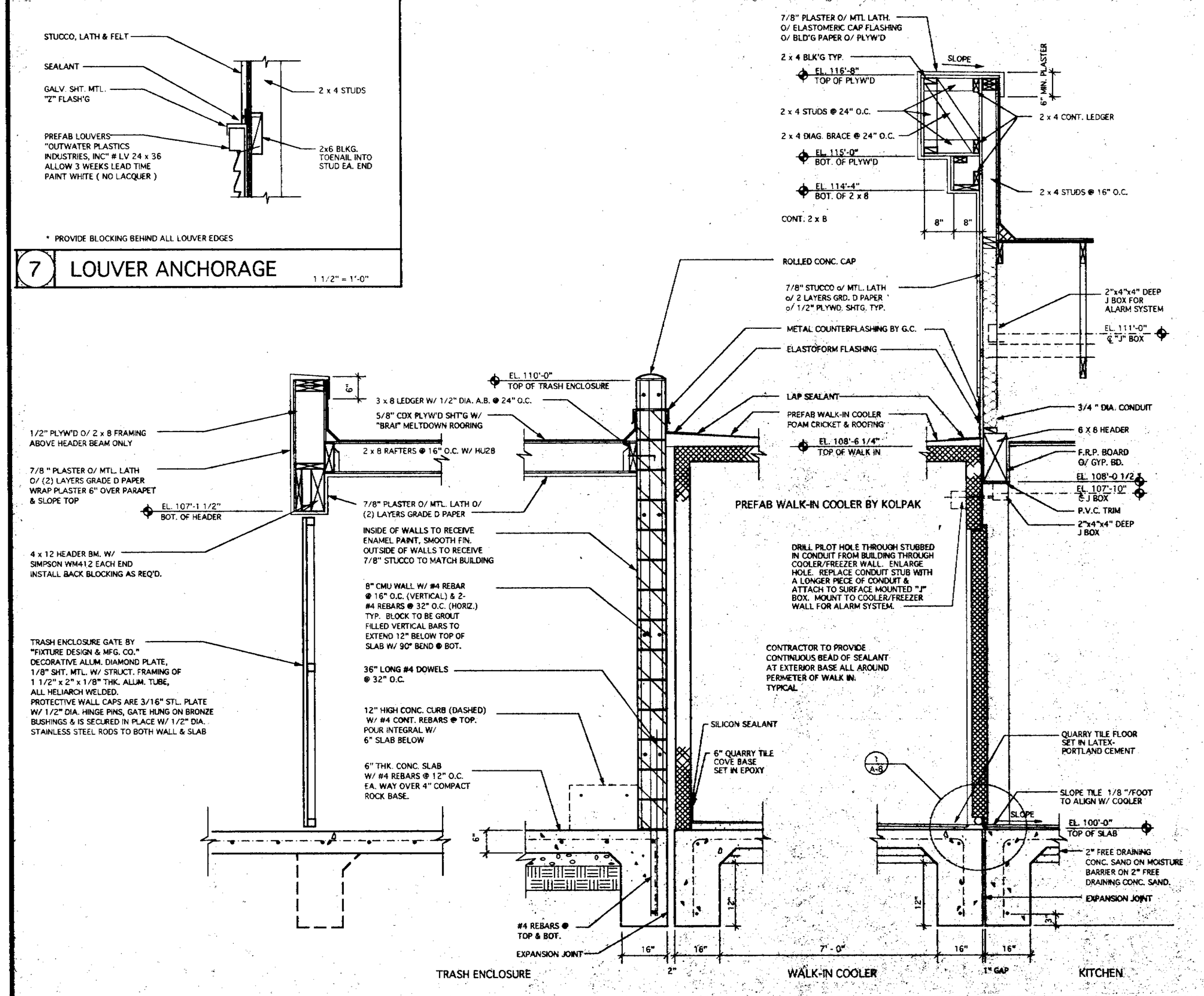

6 BUILDING SECTION AT TRASH ENCLOSURE - WALK-IN COOLER - KITCHEN SCALE 3/4" = 1'-0"

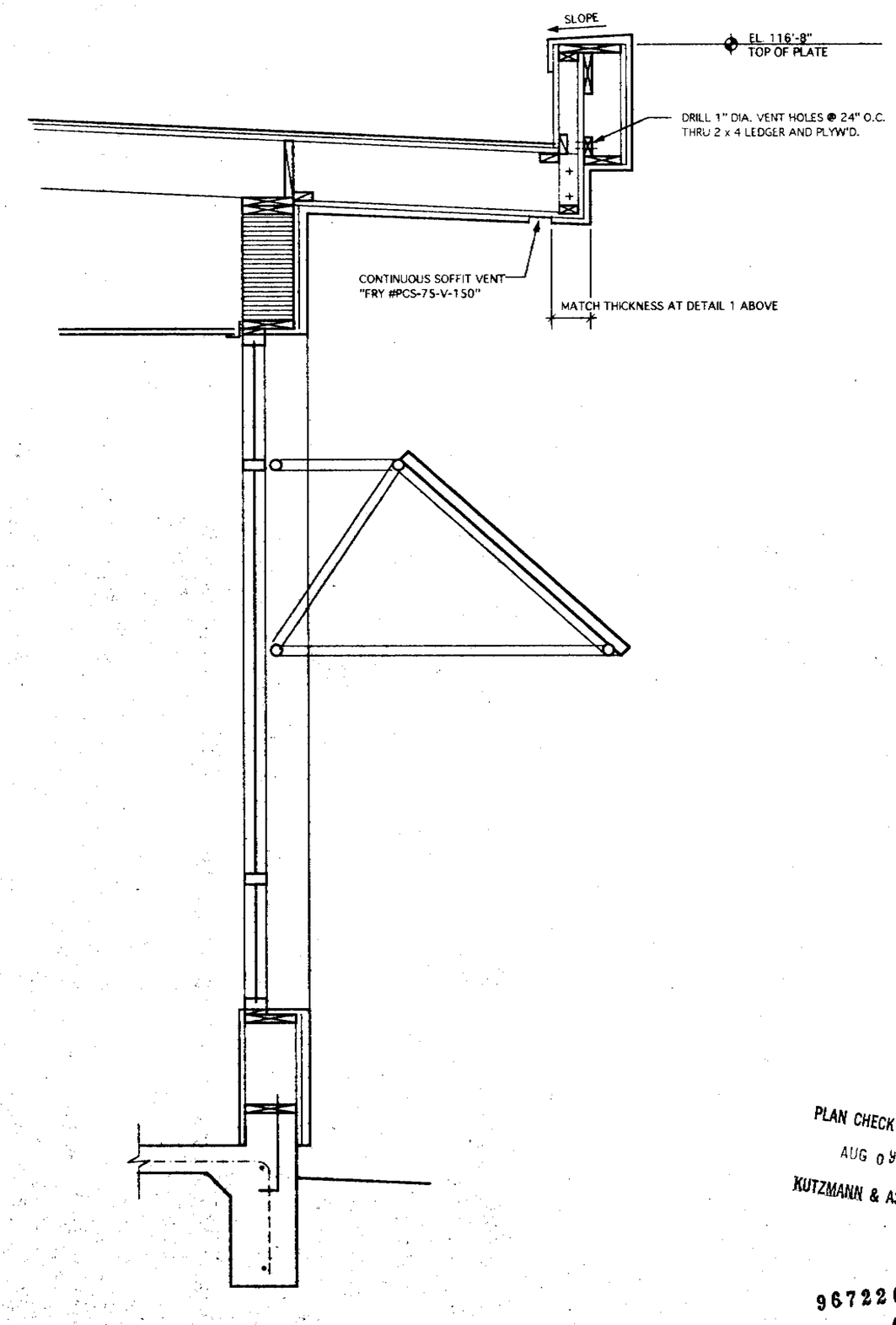

2 DINING RM. SECTION AT WINDOW SCALE 3/4" = 1'-0"

PLAN CHECK APPROVAL
AUG 09 1996
KUTZMANN & ASSOCIATES

9672280
16

Copyright 1996
EDWIN BRUCE ASSOCIATES. All designs drawings, and written material appearing herein, are protected and constitute original and unpublished work of the Architect and may not be copied, revised, re-used or disclosed without the written consent of the Architect. Equipment manufactured by others is excluded. Drawings and specifications are instruments of architectural service, and shall remain the property of the Architect. Use is restricted to the site for which they were prepared.

EDWIN BRUCE
Associates
Architects
A.I.A.
1625 The Alameda
Suite 610
San Jose, CA.
95126
Ph. 408/995 5701
Fax 408/995 5022

LICENSED ARCHITECT EDWIN G. BRUCE NO. C-14589 REN. 6-31-97 STATE OF CALIFORNIA

KFC

K.F.C. JENSEN

CORNER OF BASCOM AVE. AND NAGLEE AVE.
SAN JOSE CALIFORNIA

JULY 22, 1996	DATE
D.C.	DRAWN
1/4 = 1'-0"	SCALE
9405	JOB NO.

A-6

OF 48

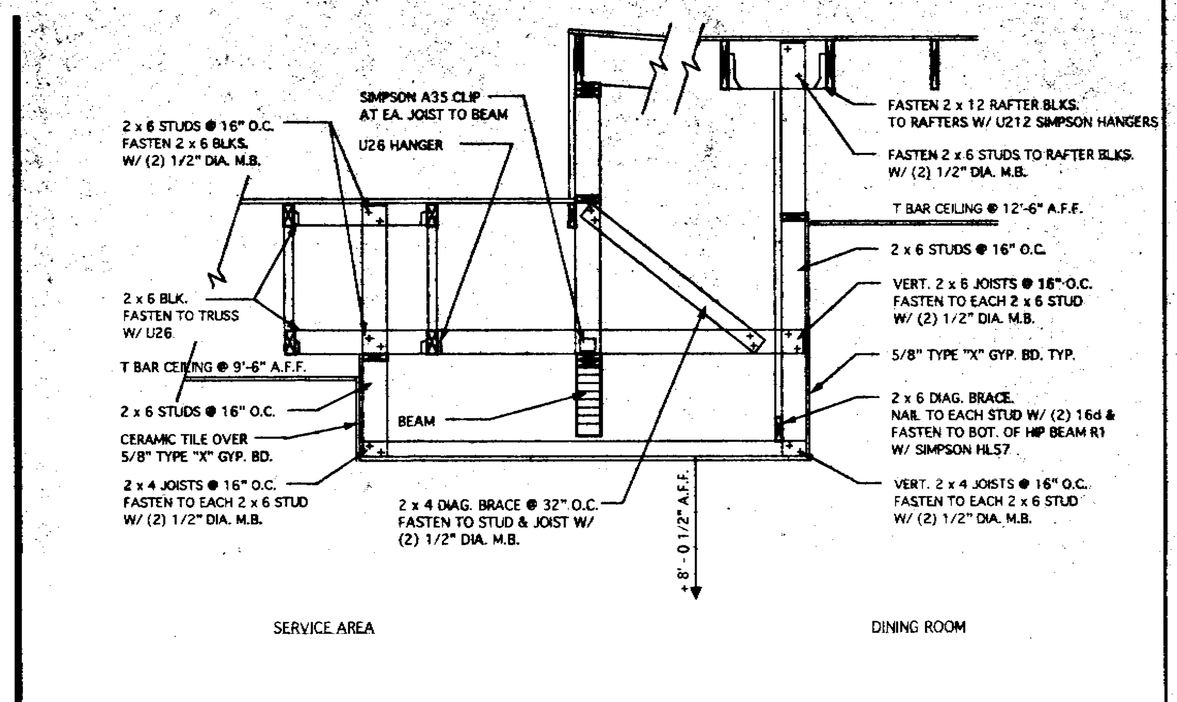

5 DROPPED CEILING DETAIL

SCALE 1 1/2" = 1'-0"

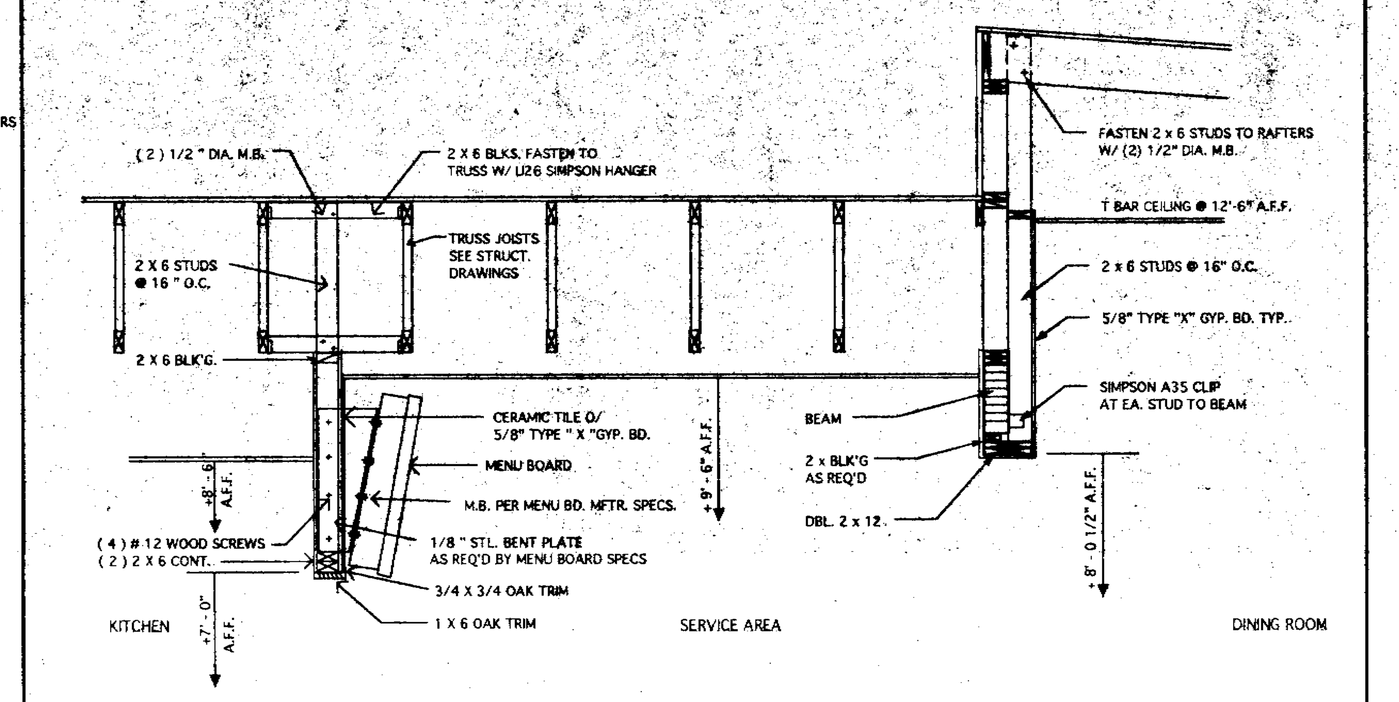

3 VALANCE DETAIL

SCALE 1 1/2" = 1'-0"

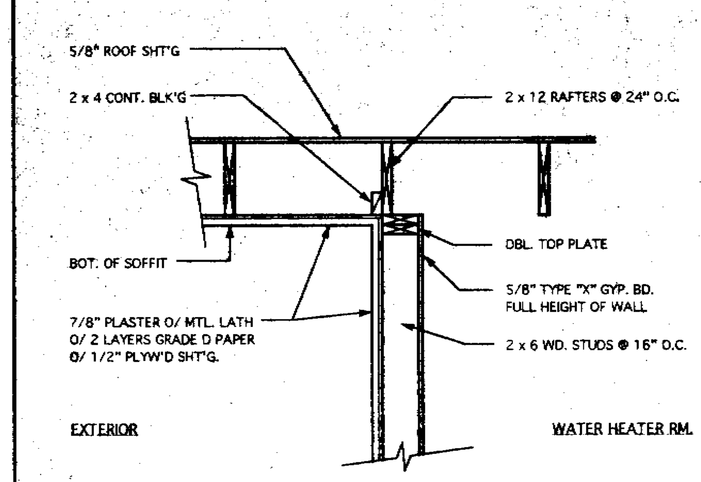

1 1 HR. WALL DETAIL

(PER TABLE 7-B. ITEMS NO. 18-1.3 / 17-1.3)

SCALE 1 1/2" = 1'-0"

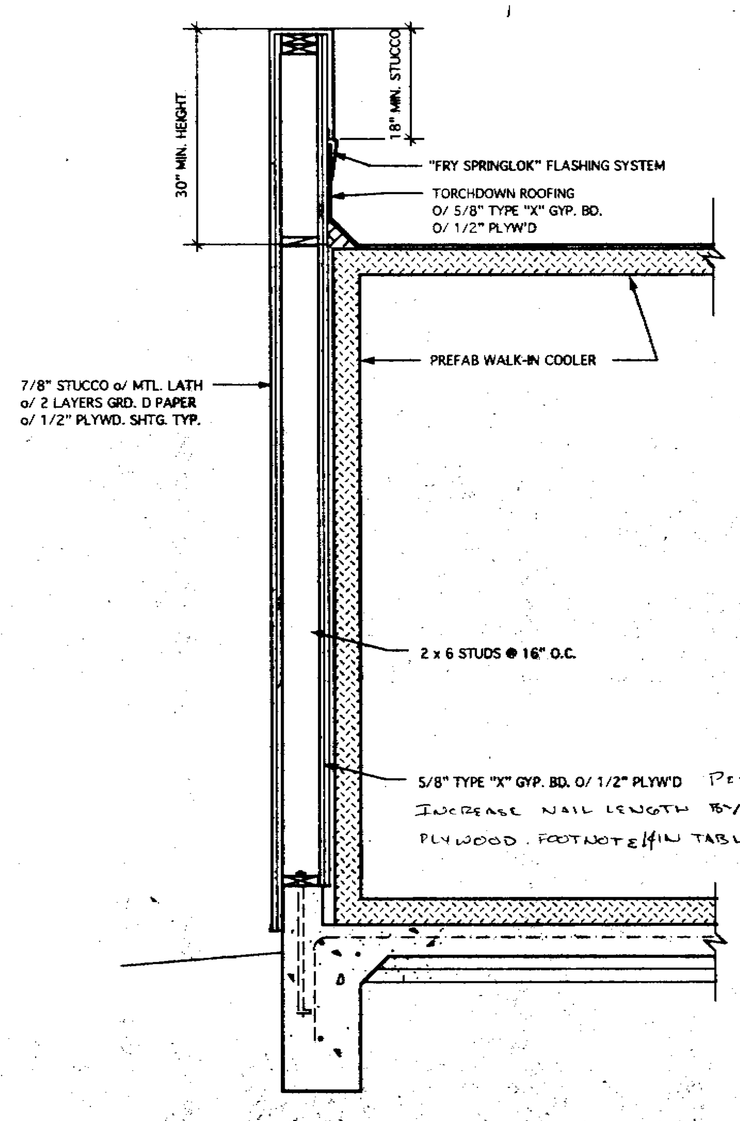

6 1 HOUR WALL AT WALK-IN COOLER

(PER TABLE 7-B. ITEMS NO. 18-1.3 / 17-1.3)

SCALE 3/4" = 1'-0"

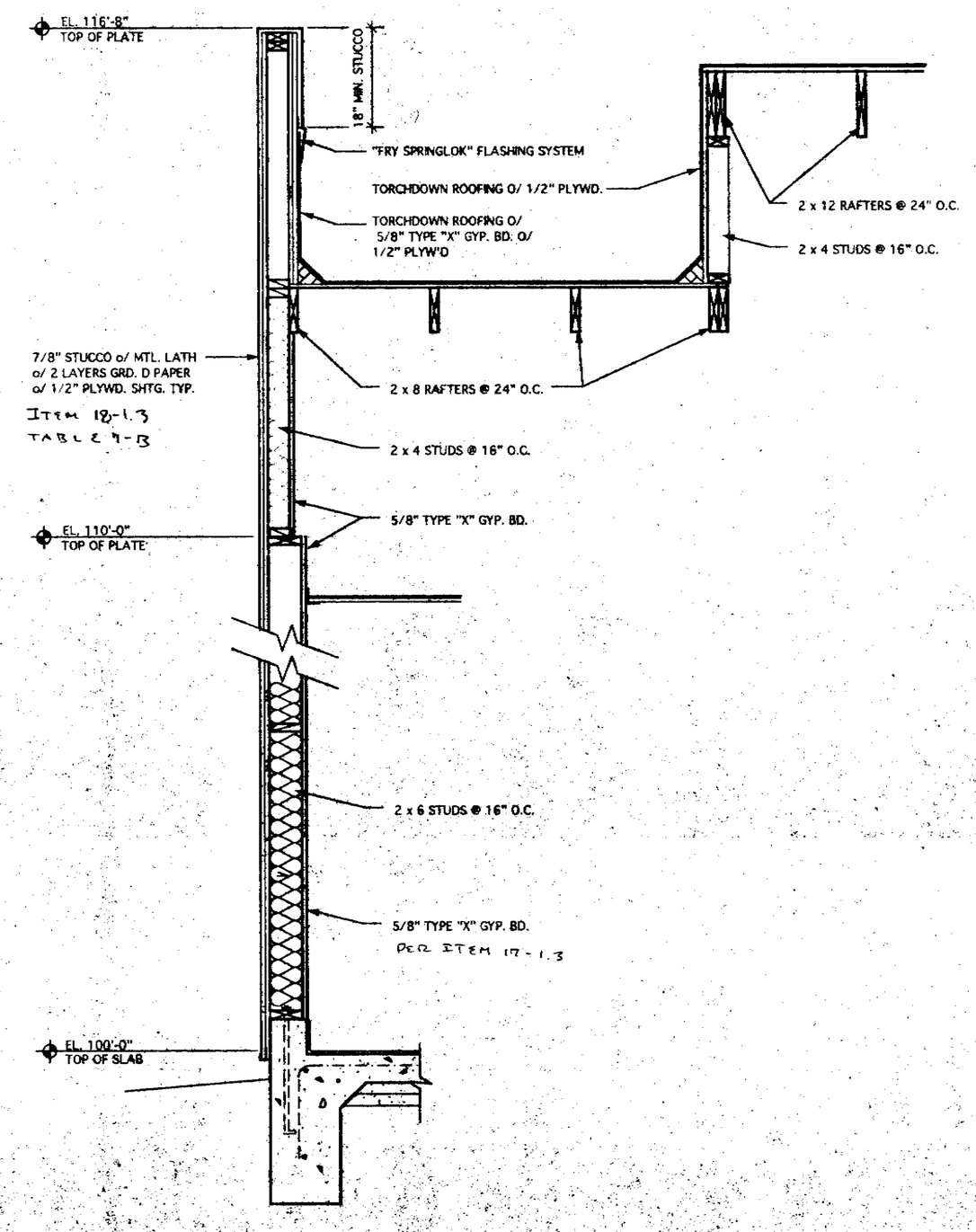

4 1 HOUR WALL & PARAPET AT EQUIPMENT WELL

PER TABLE 7-B. ITEMS NO. 18-1.3 / 17-1.3)

SCALE 3/4" = 1'-0"

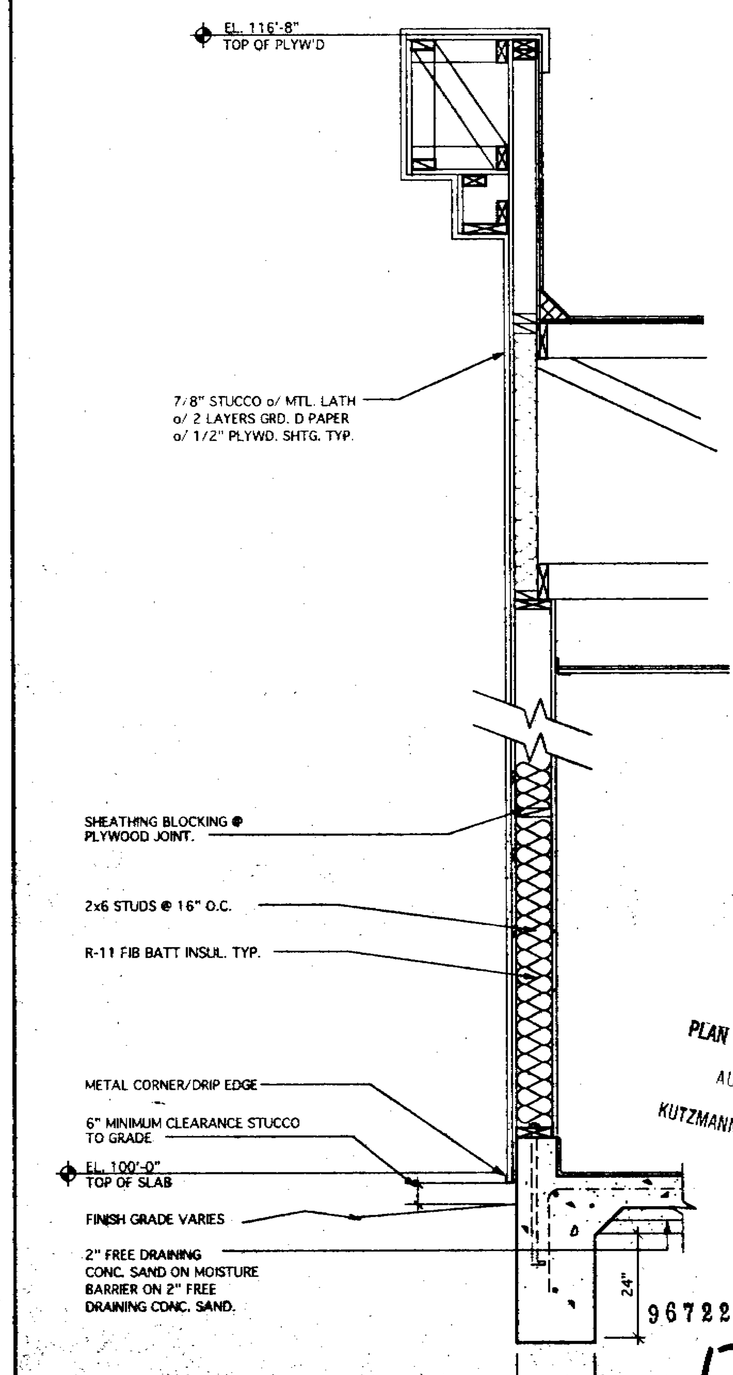

2 TYPICAL WALL SECTION

SCALE 3/4" = 1'-0"

PLAN CHECK APPROVAL
AUG 09 1996
KUTZMANN & ASSOCIATES

9672260

17

Copyright 1996
EDWIN BRUCE ASSOCIATES. All designs drawings, and written material appearing herein, are protected and constitute original and unpublished work of the Architect and may not be copied, revised, re-used or disclosed without the written consent of the Architect. Equipment manufactured by others is excluded. Drawings and specifications are instruments of architectural service, and shall remain the property of the Architect. Use is restricted to the site for which they were prepared.

FIRE DEPT. 7/27/96 1

EDWIN BRUCE
Associates
Architects
A.I.A.
1625 The Alameda
Suite 610
San Jose, CA.
95126
Ph. 408/995 5701
Fax 408/995 5022

LICENSED ARCHITECT
EDWIN G. BRUCE
NO. C-12608
REN. 5-31-97
STATE OF CALIFORNIA

KFC

K.F.C. JENSEN

CORNER OF BASCOM AVE. AND NAGLEE AVE.
SAN JOSE
CALIFORNIA

MAY 24, 1996	DATE
D.C.	DRAWN
1/4 = 1'-0"	SCALE
9405	JOB NO.

A-7

17 OF ....

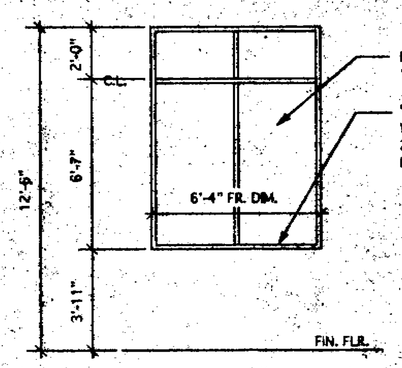

A (2 REQUIRED)

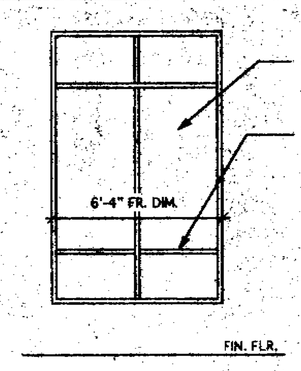

B (1 REQUIRED)

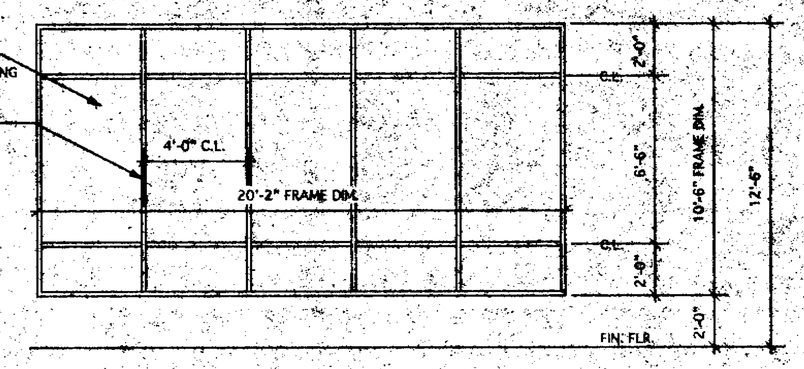

C (2 REQUIRED)

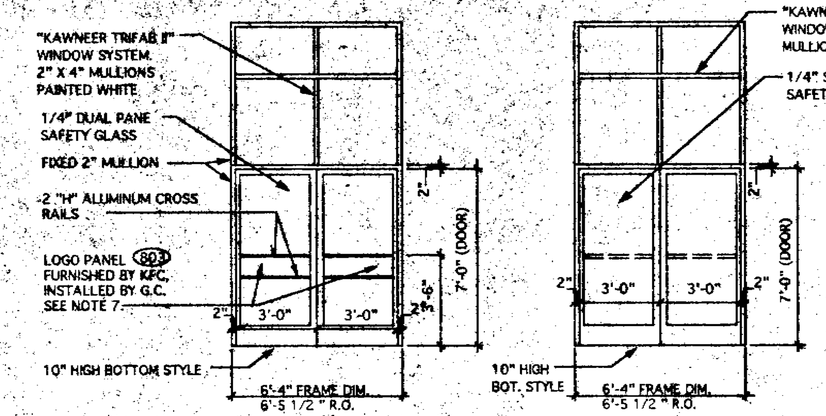

A B

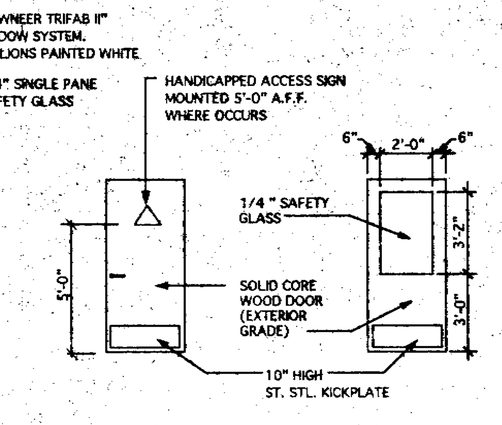

C D

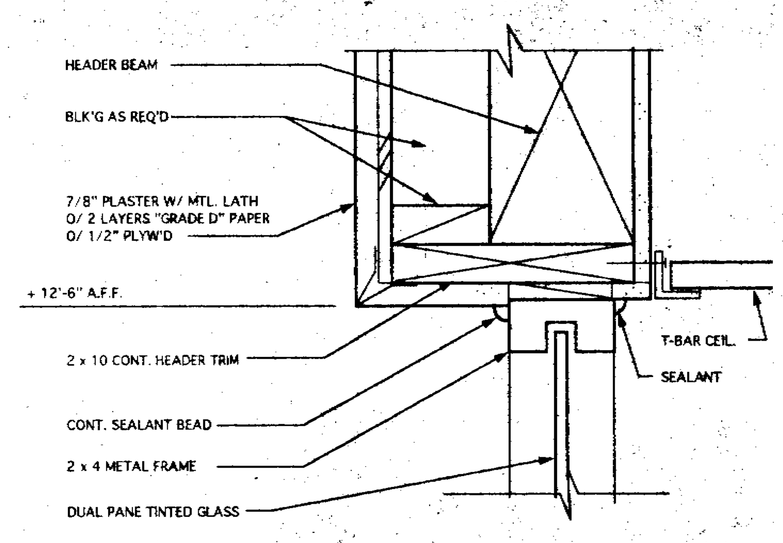

WINDOW HEAD DETAIL 3" = 1'-0" 4

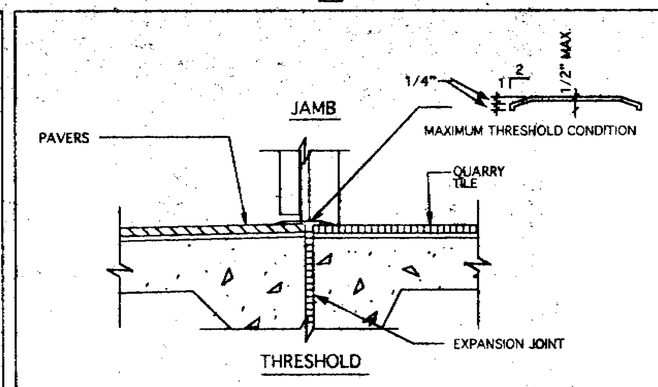

ALUMINUM DOOR DETAILS 1 1/2" = 1'-0" 1

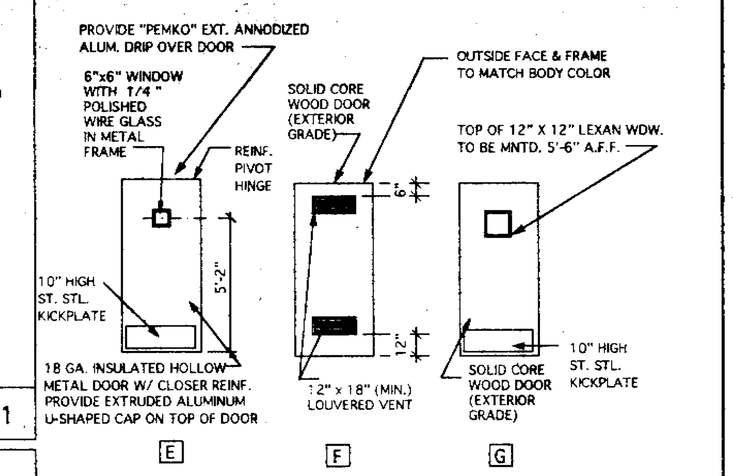

E F G

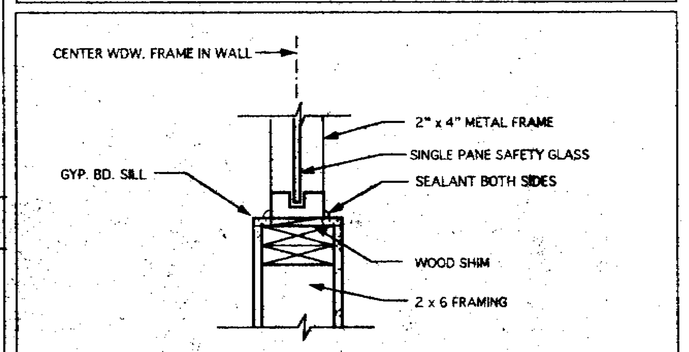

INT. WDW. SILL (HEAD & JAMB SIM.) 1 1/2" = 1'-0" 2

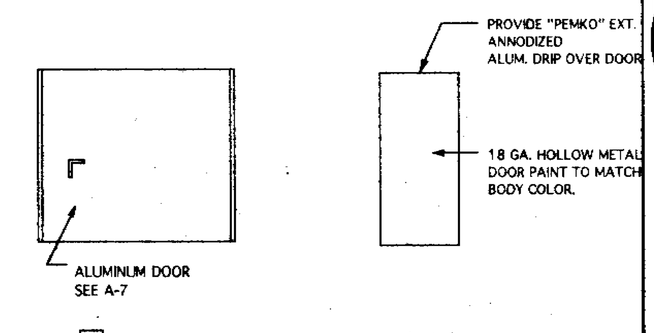

H I

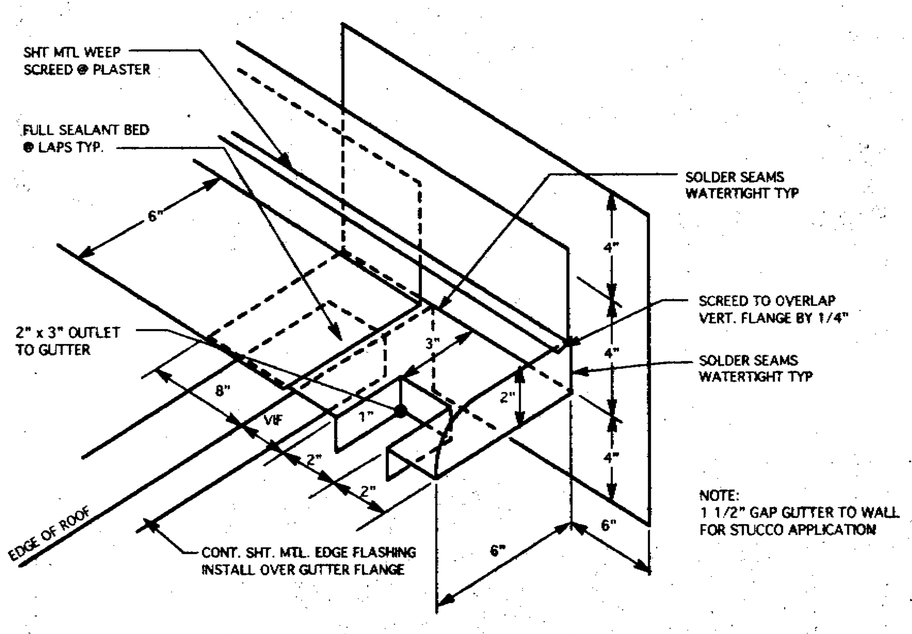

6 COLLECTOR AT ROOF TO WALL JUNCTURE

NO SCALE

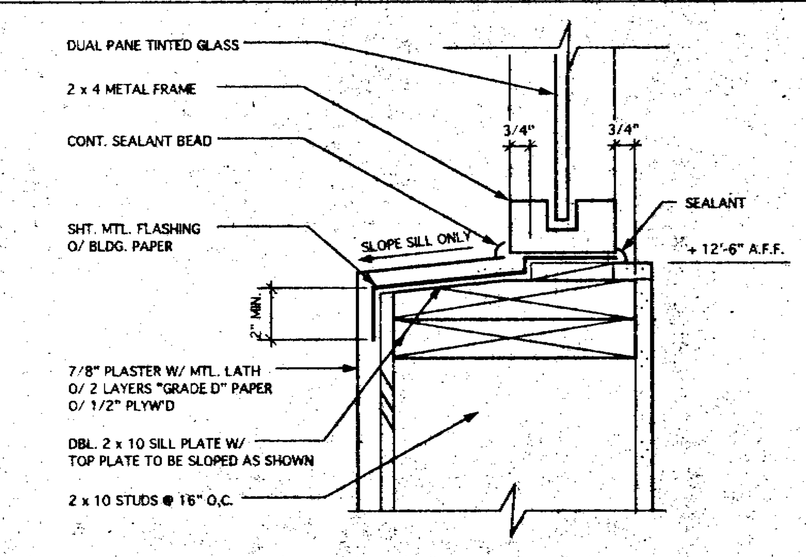

WINDOW SILL DETAIL (JAMB SIMILAR) 3" = 1'-0" 5

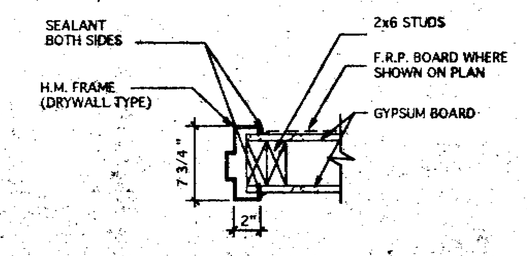

DOOR JAMB (HEAD SIM.) 1 1/2" = 1'-0" 3

DOOR SCHEDULE 5

OPN'G. NO.	DOOR SIZE	DOOR TYPE	FRAME MAT'L	REMARKS
1	3'-0" x 7'-0" x 1 3/4 " (DBL.)	A	ALUM.	KAWNEER 190 SERIES
~~2~~	~~6'-0" O M I T (DBL.)~~	~~B~~	~~ALUM.~~	~~KAWNEER 190 SERIES~~
3	3'-0" x 6'-8" x 1 3/4 "	F	H.M.	
4	3'-0" x 6'-8" x 1 3/4"	C	H.M.	
5	3'-0" x 6'-8" x 1 3/4 "	C	H.M.	
6	2'-0" x 6'-8" x 1 3/4 "	C	H.M.	
7	3'-0" x 6'-8" x 1 3/4 "	G	H.M.	
8	3'-0" x 6'-8" x 1 3/4 "	D	H.M.	
9	3'-0" x 6'-8" x 1 3/4 "	I	H.M.	
10	3'-0" x 7'-0" x 1 3/4 " (DBL.)	A	ALUM.	KAWNEER 190 SERIES
11	3'-0" x 7'-0" x 1 3/4 " (DBL.)	B	ALUM.	KAWNEER 190 SERIES
12	3'-0" x 6'-8" x 1 3/4 "	G	H.M.	
13	3'-6" x 7'-0" x 1 3/4 "	E	H.M.	PIVOT HINGE
14	8'-0" x 7'-0"	H	STL.	TRASH ENCLOSURE GATE

DOOR COLOR SCHEDULE 10

DOOR #	DOOR FINISH	FRAME FINISH
1		
2		
3		
4		
5		
6		
7		
8 & 9		
10		
11		
12		

PLAN CHECK APPROVAL
AUG 09 1996
KUTZMANN & ASSOCIATES

BEST AVAILABLE COPY

9672260

18

NOTES

1. CONTRACTOR IS TO SUBMIT SHOP DRAWINGS OF DOORS & WINDOW, AND A HARDWARE LIST TO THE ARCHITECT FOR WRITTEN APPROVAL, PRIOR TO ORDERING AND INSTALLATION.
2. DOORS IN JANITOR CLOSET, OFFICE, & RESTROOMS TO BE UNDERCUT 1/2", TYP.
3. MAIN EXITS SHALL BE EQUIPPED W/ A DBL. CYLINDER DEADBOLT W/ A 1 " MIN. THROW.
4. THE TWO PAIRS OF EXIT DOORS SHALL, WHEN UNLOCKED, BE FREE TO SWING W/O OPEREATION OF ANY LATCHING DEVICE.
5. HINGES FOR OUT-SWINGING DOORS SHALL BE EQUIPED W/ HINGE PINS DESIGNED TO BE NONREMOVEABLE W THE DOOR IN THE CLOSED POSITION OR SHALL BE PROVIDED W/ MECH. INTERLOCKS TO PREVENT REMOVAL OF THE DOOR IF THE PINS ARE REMOVED W/ THE DOOR IN THE CLOSED POSITION
6. CYLINDER GUARDS ON ALL DEADBOLT LOCKS SHALL BE BRASS BRASS OR STEEL, FREE-TURNING & & BEVELLED OR OTHERWISE PROTECTED SO THEY CANNOT BE GRIPPED BY PLIERS OR WRENCHING DEVISES.
7. ANY EXT. DOOR CONSTRUCTED OF GLASS HAVING GLAZING SET W/IN A FRAME SHALL BE OF FULLY TEMPERED GLASS OR OTHER APPROVED BURGLARY RESISTANT MATERIAL.
8. HARDWARE SUPPLIER TO VERIFY THESE NOTES W/ SELECTED HARDWARE
9. IF CONTRACTOR WISHES TO PROPOSE AN ALTERNATE, HE MUST FIRST SUBMIT SHOP DRAWINGS AND CUT SHEETS CONFIRMING SIMILAR DETAILS AND PROFILES TO THE ARCHITECT FOR APPROVAL. OTHERWISE NO ALTERNATES OR SUBSTITUTIONS WILL BE ACCEPTED.
10. GLAZING W/IN 24" OF DOORS OR 18" OF FLOORS TO BE SAFETY GLASS.

SEALANTS

GENERAL

THE WORK REQUIRED UNDER THIS SECTION INCLUDES CAULKING OF ALL JOINTS AROUND WINDOW, DOORS, STOREFRONT, EXPANSION JOINTS AND AS OTHERWISE REQUIRED FOR A COMPLETE WATER TIGHT INSTALLATION AND AS SHOWN ON DRAWINGS.

MATERIALS

EXTERIOR CAULKING SHALL BE A ONE-PART THIOKOL BASE POLYURETHANE OR G.E. SILICONE SEALANT, COLOR TO BE COMPATIBLE WITH ADJOINING SURFACES.

INTERIOR CAULKING SHALL BE PAINTERS CAULK, DAP ACRYLIC.

INSTALLATION

CLEAN ALL JOINTS BEFORE CAULKING. APPLY PRIMER WHERE AND IN QUANTITIES RECOMMENDED BY MANUFACUTRER. APPLY UNDER PRESSURE, TOOL SLIGHTLY CONCAVE AND TRIM AFTERWARDS. CLEAN ALL ADJACENT SURFACES AFTER CAULKING.

HARDWARE SCHEDULE

ALL DOORS TO BE EQUIPPED W/ LEVER HARDWARE

DOOR #1, #2, #10 & #11
PANIC HARDWARE BY KAWNEER
ALL OTHER HARDWARE BY KAWNEER

DOOR #6 IN
1-30B3 x 7 3/4 HMF WELDED
1-30B3 x 1 3/4 OAK MVT 1 HR.
W/ (2) T&L12 AIR LOUVER W/SCREEN
3-HAGER BB1279 4.5 x 4.5 x 289 x NRP
1-SCHLAGE D80 RHO 626
1-PEMKO 18B0 SMOKE SEAL
1-PEMKO 17CA THRESHOLD
11-PEMKO 315BN USE2

DOOR #4 & #5 IN 3L
2-3068 x 7 3/4 HMF WELDED
2-4068 x 1 3/4 OAK MVT
6-HAGER BB1279 4.5 x 4.5 ZBO HINGES
2-SCHLAGE D40 RHO 626 PRIVACY LEVER
2-LCN 1461 US26 CLOSERS
2-QUALITY 10x34x320 KICKPLATES
2-QUALITY WR80C 626 WALL STOPS
2-HIRMCHAE 8205 SUS W/ SPACER

DOOR #8 JIL
1-3068 x 7 3/4 HMF WELDED
1-3068 x 1 3/4 HMD CHER
3-HAGER BB1279 4.5 x 4.5 ZBO HINGES
1-SCHLAGE D80 RHO 626 STOREROOM
1-QUALITY 10x34x320 KICKPLATE
1-QUALITY WR80C 626

SWEEPS: PEMKO 315BN - 42
WEATHERSTRIP: PEMKO 316 AV, 1/4 x 2/84

BIDDERS TO CONTACT FRED HEPP @ PH. (970) 224-4630 "F & L DOOR AND LOCK SERVICE, INC" FOR INFO & PRICING.

DOOR #7 & #9 JIL
1-3068 x 7 3/4 HMF WELDED
1-3068 x 1 3/4 OAK MVT W/ 12x12 VLF LOUAN 3'0 ON CENTER
3-HAGER BB1279 4.5 x 4.5x 290 HINGES
1-SARGENT 10P1 2ND LEVER
1-LCN 1461 US26 CLOSER
1-QUALITY 10x34x320 KICKPLATE
1-QUALITY WR80C 626

DOOR #8 IN
1-3068 x 7 3/4 HMF WELDED
1-3068 x 1 3/4 OAK MVT W/24x36 TEMP GLASS
3-HAGER BB1279 4.5 x 4.5 x 290 HINGES
1-SCHLAGE D53 RHO 626 ENTRANCE LEVER
1-QUALITY 10x34x320 KICKPLATE

DOOR #9 IN
1-3068 x 7 3/4 HMF WELDED
1-3068 x 1 3/4 OAK MVT
3-HAGER BB1279 4.5 x 4.5 x 290 HINGES
1-SCHLAGE D80 RHO 626
1-LCN 1460 US26 CLOSER
1-QUALITY 10x34x320 KICKPLATE
1-QUALITY 144 626 FLOOR STOP

DOOR #10 IN
1-4070x 7 3/4 HMF WELDED
1-3070 x 1 3/4 18 GA. RH HMD
W/(6) 1/4 WIRE GLASS 3'0 ON CENTER
1-HAGER 253 4.5 REINFORCEMENT PIVOT
3-HAGER BB1279 4 1/2 x 4 1/2 x 290 NRP
1-VON DUPRIN 22NL x 88 x 99 PANIC DEVICE
1-LCN 4111 EM 2689 US26 CLOSER
1-QUALITY 10x34x320 KICKPLATE
1-QUALITY WR80C 626 WALL STOP

DOORS & WINDOWS GENERAL NOTES

1. ALL KICKPLATES SHALL BE MOUNTED ON BOTH SIDES OF DOOR.
2. ALL CLOSERS TO BE MOUNTED WITH THRU BOLT, REINFORCE AS REQUIRED.
3. CLOSERS FOR DOORS 1, 2, 10, 11 WITH MAXIMUM OF 8.5 LB. PUSH AND PULL PRESSURE. TOILET DOORS 4 AND 5 TO HAVE 5 LB. ADJUSTMENT.
4. CYLINDER LOCKS AT 50 5/16 IN. PANIC SETS AT 40 5/16 IN. LOCKSET6 AT MANUFACTURERS STANDARD HEIGHT, 39 3/16 IN. + -
5. LOCKS WITH INTERCHANGEABLE CORES SHALL BE SUPPLIED WITH CONSTRUCTION CORES. KFC CONSTRUCTION ENGINEER SHALL CONTACT HARDWARE SUPPLIER TO ARRANGE FOR THE RETURN OF CONSTRUCTION CORES IN EXCHANGE FOR PERMANENT CORES KEYED PER THE OWNER'S REQUIREMENTS.
6. VINYL SNAP-IN TOP CAPS FOR ALL EXTERIOR HOLLOW METAL DOORS BY DOOR MANUFACTURER.
7. INSTALL TWO LOGO PANELS PER EACH ALUMINUM EXTERIOR DOOR, ONE FACING INTERIOR AND ONE FACING EXTERIOR.

Copyright 1996
EDWIN BRUCE ASSOCIATES. All designs drawings, and written material appearing herein, are protected and constitute original and unpublished work of the Architect and may not be copied, reviewed, re-used or disclosed without the written consent of the Architect. Equipment manufactured by others is excluded. Drawings and specifications are instruments of architectural service, and shall remain the property of the Architect. Use is restricted to the site for which they were prepared.

EDWIN BRUCE
Associates
Architects
A.I.A.
1625 The Alameda
Suite 610
San Jose, CA.
95126
Ph. 408/995 5701
Fax 408/995 5022

LICENSED ARCHITECT EDWIN G. BRUCE NO. C-14[illegible] REN. 8-31-[illegible] STATE OF CALIFORNIA

KFC

K.F.C. JENSEN

CORNER OF BASCOM AVE. AND NAGLEE AVE.
SAN JOSE
CALIFORNIA

MAY 24, 1996	DATE
D.C.	DRAWN
1/4 = 1'-0"	SCALE
9405	JOB NO.

A-8

18 OF

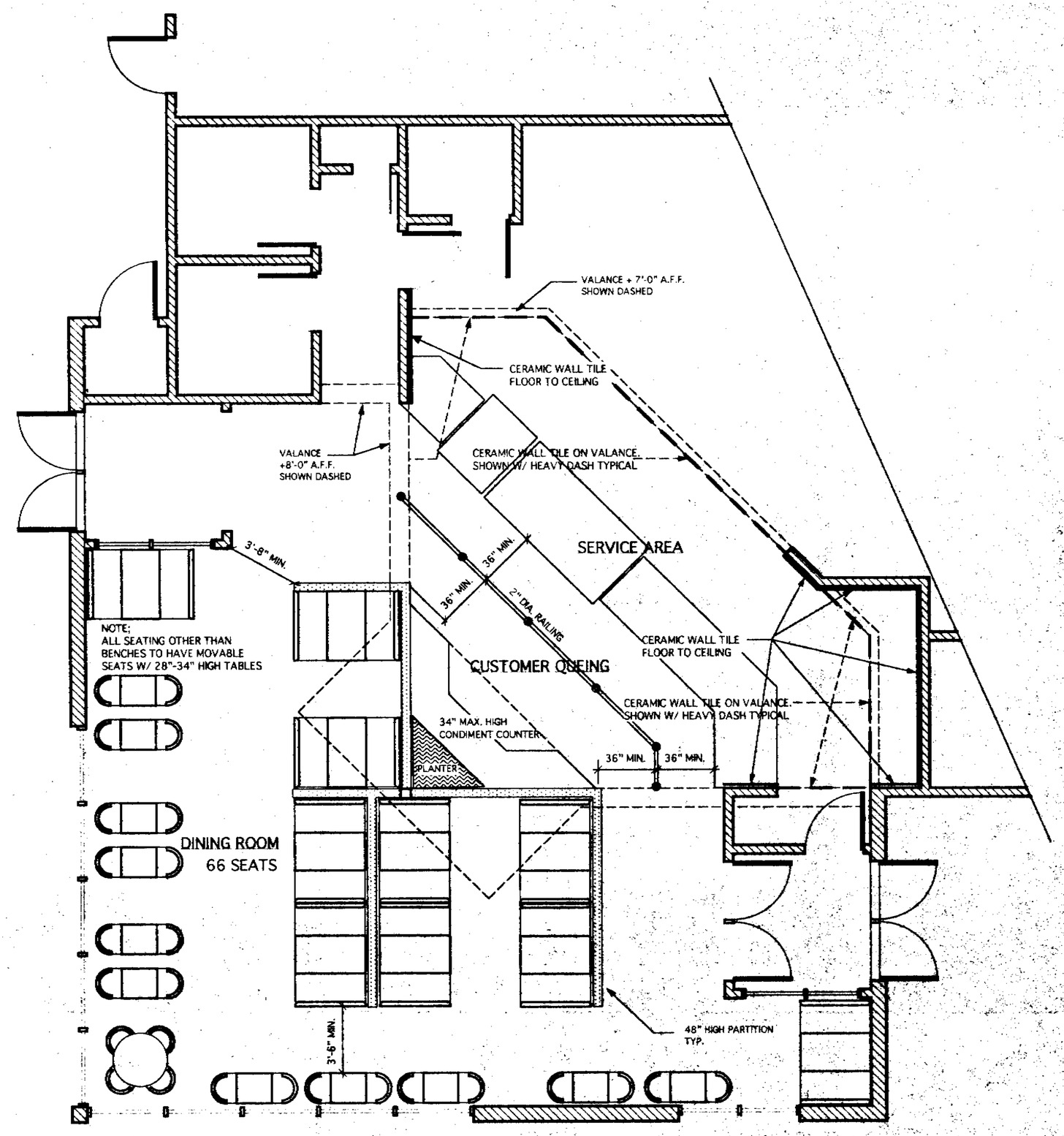

SEATING PLAN & WALL TILE LOCATION

1/4" = 1'-0"

SEATING PLAN GENERAL NOTES

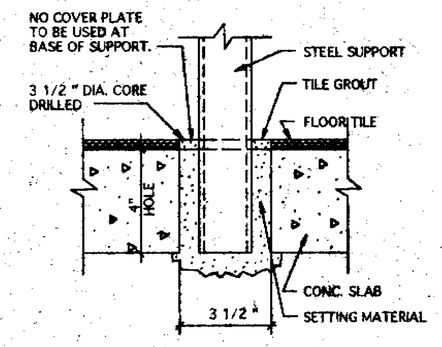

TABLE AND CLUSTER BASE SECTION 3"=1'-0" | 1

1. LAYOUT CORE CENTER LINE LOCATIONS, AFTER FLOOR TILE IS LAID AND CURED.
2. DRILL CORES 4" DEEP (MIN. DEPTH) INTO CONC. SLAB.
3. REMOVE CORES AND PREPARE HOLES TO RECEIVE NON-SHRINK SETTING MATERIAL.
4. FILL HOLES 50% FULL AND INSTALL BASE. SHIM AND BRACE POSTS PLUMB AND LEVEL. TABLE TOP SHOULD BE @ 2'-6" A.F.F. ALLOW SET-UP TIME PER MANUFACTURER'S INSTRUCTIONS.
5. AFTER INITIAL SET-UP, REMOVE SHIMS AND FILL REMAINDER OF HOLE TO TOP OF CONCRETE SLAB.
6. ALLOW 24 HRS. MINIMUM FOR SUPPORTS TO CURE. FOLLOW SETTING MATERIAL MANUFACTURER'S INSTRUCTIONS.
7. INSTALL FLOOR TILE GROUT OVER SUPPORT SETTING MATERIAL. USE CARE TO MATCH COLOR, DEPTH AND TEXTURE OF FLOOR TILE GROUT.

NOTE:
SETTING MATERIAL SHOULD BE A NON-FERROUS COMPOSITION HYDRAULIC CEMENT OR NON-SHRINK GROUT. PRODUCTS MANUF. BY THE FOLLOWING COMPANIES ARE ACCEPTABLE:
1. MINWAX CONST. PROD.. "POURROCK".
2. THORD SYSTEMS, "THOROGRIP".

TABLE BASE SETTING PROCEDURE

CAUTION: SEATING FRAMES VARY BY MANUFACTURE. CO-ORDINATE CORE DRILLING LOCATION WITH LAYOUT FURNISHED BY SEATING SUPPLIER. NOTE MINIMUM DIMENSIONS BETWEEN TABLES ON SEATING PLAN.

ROOM FINISH NOTES

FLOORING

F1 **ABRASIVE FLOOR TILE** - FURNISHED BY KFC TO BE INTERAMICS CORP. "GRANITTON". COLOR - MAUVE MIX. STYLE - STUDDED k-FIA AND NONSTUDDED k-FIB. 8 x 8 x 5/16 WITH MATCHING COVE BASE. STUDDED TO BE LOCATED IN CIRCULATION AISLES. NONSTUDDED LOCATED UNDER EQUIPMENT.

F2 **FINISHED FLOOR TILE** - DAL DURAFLOR DFL 1917 "GRAYSTONE" W/ 5% CORRUNDUM AT 90 GRIT, 8 x 8 W/ MATCHING COVE BASE. GROUT COLLOR - H.B. FULLER, LIGHT PEWTER 927, L & M SILVER GRAY.

WALL TREATMENT

W1 **F.R.P. BOARD** - KAL WALL "KALITE" .090" THICK ALMOND, OR MARLITE BRAND F.R.P. BOARD BY MASONITE CORP..090" THICK ALMOND.

W2 **GYPSUM WALLBOARD PAINTING** - SHERWIN WILLIAMS OFF WHITE #SW1095

W3 **CERAMIC WALL TILE** - DAL TILE #D-100 WHITE 4 1/4 x 4 1/4 WITH MATCHING GROUT. ACCENT STRIP - TWO ROWS #DM-1-D VERMILLION

W4 **VINYL WALL COVERING** - AS SPECIFIED ON DECOR SUPPLIER'S DRAWINGS. FURNISHED BY DECOR SUPPLIER, INSTALL BY GENERAL CONTRACTOR.

CEILING

C1 **SUSPENDED ACOUSTICAL TILE CEILING W/ GLUE GYP. BD. BACKING**: ARMSTRONG CORK COMPANY "CORTEGA COLORTONE", 24"x24"x 5/8 " TEGULAR "WHITE" COLOR; WITH MATCHING LOW GLOSS GRID; FLAME SPREAD RATING 0-25, CLASS A. ALTERNATE: U.S. GYPSUM COMPANY FIRECODE "C" PANEL #3270-2-MIL WHITE VINYL, 24"x24"x 1/2 " WHITE ENAMEL SUSPENDED GRID LOW GLOSS GRID; FLAME SPREAD RATING 0-25,.CLASS A,

C2 **SUSPENDED ACOUSTICAL TILE CEILING W/ GLUED GYP. BD. BACKING** - ACOUSTIFLEX CORP. CAPAUL "VINYL ROCK", #1140, WASHABLE NON-PERFERATED 24" X 48" x 1/2 "; WHITE COLOR; WHITE ENAMEL SUSPENSION GRID; FLAME SPREAD RATING 0-25, CLASS A. ALTERNATE: U.S. GYPSUM CO. FIRECODE "C" PANEL #3270-2-MIL WHITE VINYL, 24"x48"x 1/2 "; WHITE ENAMEL SUSPENSION GRID; FLAME SPREAD RATING 0-25, CLASS A.

C3 **5/8" GYPSUM BOARD "TYPE X" MOISTURE RESISTANT** - ATTACHED TO 2" X 6" FRAMING @ 24" O.C.. PAINT COLOR: SHERWIN WILLIAMS PURE WHITE SW1004.

ROOM FINISH SCHEDULE

RM. NO.	ROOM NAME	FLOOR/BASE		WALLS		CEILING		CLG. HGT.	REMARKS
01	DINING	TILE	F2	VINYL WALL COVERING	W4	ACOUSTICAL TILE	C1	12'-6"	SEE NOTES 3, 4 & 5.
02	VESTIBULE	TILE	F2	VINYL WALL COVERING	W4	ACOUSTICAL TILE	C1	12'-6"	SEE NOTE 4.
03	HOT WATER HEATER	SEALED CONCRETE		MOISTURE RESIST. GYP. BD.	W2	GYPSUM BOARD	C3	7'-4"	SEE NOTE 6.
04	WOMENS	TILE	F2	CERAMIC TILE	W3	GYPSUM BOARD	C3	8'-0"	SEE NOTE 1.
05	MEN	TILE	F2	CERAMIC TILE	W3	GYPSUM BOARD	C3	8'-0"	SEE NOTE 1.
06	HALL	TILE	F2	VINYL WALL COVERING	W4	ACOUSTICAL TILE	C1	8'-6"	SEE NOTE 4.
07	JANITOR'S CL.	TILE	F2	MOISTURE RESIST. GYP. BD.	W2	GYPSUM BOARD	C3	8'-0"	
08	OFFICE	TILE	F1	F.R.P.	W1	GYPSUM BOARD	C2	8'-0"	
09	CUSTOMER QUEING	TILE	F2	VINYL WALL COVERING	W4	ACOUSTICAL TILE	C1	9'-6"	SEE NOTES 3, 4 & 5.
10	VESTIBULE	TILE	F2	VINYL WALL COVERING	W4	ACOUSTICAL TILE	C1	12'-6"	SEE NOTE 4.
11	SERVICE	TILE	F1	CERAMIC TILES	W3	ACOUST. TILE	C1	9'-6"	
12	KITCHEN	TILE	F1	F.R.P.	W1	ACOUSTICAL TILE	C2	8'-6"	SEE NOTE 2.
13	DISHWASHING	TILE	F1	F.R.P.	W1	ACOUSTICAL TILE	C2	8'-6"	
14	STORAGE	TILE	F1	F.R.P.	W1	ACOUSTICAL TILE	C2	8'-6"	
15	WALK-IN FREEZER	TILE	F1	---BY MANUFACTURER---					SEE DETAILS SHEET A6.
16/17	CHICKEN BOX / WALK-IN COOLER	TILE	F1	---BY MANUFACTURER---					SEE DETAILS SHEET A6.
18	TRASH ENCLOSURE	SEALED CONC.		C.M.U.		STUCCO		8'-0"	CEILING - STUCCO, WALLS - C.M.U. SMOOTH FINISH ENAMEL

NOTES:
1. IN MENS TOILET 05 & WOMENS TOILET 04, INSTALL CERAMIC TILE OVER MOISTURE RESISTANT GYPSUM BOARD.
2. IN SERVICE AREA 11, KITCHEN 12, DISHWASHING 13, AND STORAGE 14, INSTALL F.R.P. BOARD OVER MOISTURE RESISTANT GYPSUM BOARD.
3. WOOD FURRING TO BE LOCATED AS REQUIRED TO ATTACH DECORATIVE WOOD TRIM.
4. SIZE AND SEAL WALLS TO RECEIVE VINYL WALLCOVERING. REFER TO PAINT SPECIFICATIONS.
5. 1 1/8 " CLEAR LEXAN CORNER GUARDS MFG. BY DECROVIN OR EQUAL, INSTALLED ON FULL HEIGHT OF CORNER W/ CHROME PLATED SHEET METAL SCREWS @ 18" O.C. MAX.
6. HOT WATER HEATER RM. TO HAVE SEALED CONCRETE FLOOR, 5/8" WATER RESIST. GYP. BD. WALLS & CEILING W/ ENAMEL PAINT FINISH (SEE SPECS).
7. REFER TO DECOR SUPPIER'S DRAWINGS.

PLAN CHECK APPROVAL
AUG 09 1996
KUTZMANN & ASSOCIATES
19
9672260

Copyright 1996
EDWIN BRUCE ASSOCIATES. All designs drawings, and written material appearing herein, are protected and constitute original and unpublished work of the Architect and may not be copied, revised, re-used or disclosed without the written consent of the Architect. Equipment manufactured by others is excluded. Drawings and specifications are instruments of architectural service, and shall remain the property of the Architect. Use is restricted to the site for which they were prepared.

EDWIN BRUCE
Associates
Architects
A.I.A.
1625 The Alameda
Suite 610
San Jose, CA.
95126
Ph. 408/995 5701
Fax 408/995 5022

LICENSED ARCHITECT EDWIN C. BRUCE NO. C-14838 EXPN. 6-31-96 STATE OF CALIFORNIA

KFC

K.F.C. JENSEN
CORNER OF BASCOM AVE. AND NAGLEE AVE.
SAN JOSE CALIFORNIA

JULY 22, 1996	DATE
D.C.	DRAWN
1/4 = 1'-0"	SCALE
9405	JOB NO.

A-9
OF 46

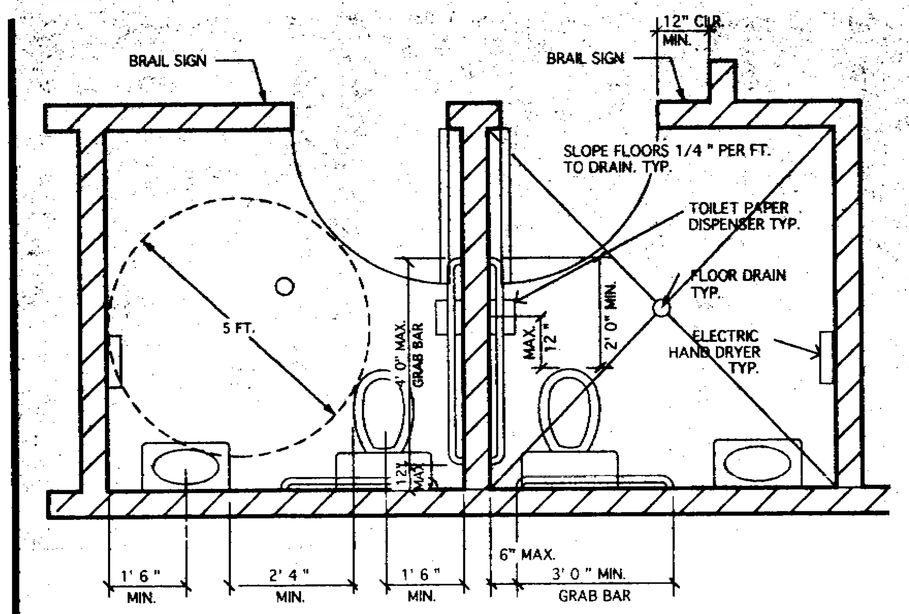

MEN (2) WOMEN (3)

NOTES:

1. CONTRACTOR TO PROVIDE 2 X 6 BACKING FOR ALL TOILET ROOM EQUPT. & GRAB BARS.
2. CONCEAL PIPING AND CONDUITS OF ALL KINDS IN WALLS, FLOORS, CEILINGS, OR APPROVED CONDUIT RUNS, TYP..
3. BRAILLE RESTROOM IDENTIFICATION SIGNS TO BE CENTERED 60" ABOVE FINISHED FLOOR TO THE STRIKE SIDE OF DOOR. LETTERS & NUMERALS ARE RAISED 1/32", UPPERCASE SANS SERIF OR SIMPLE SERIF TYPE & ARE ACCOMPANIED BY GRABE 2 BRAILLE.
4. PICTOGRAM RESTROOM IDENTIFICATION SIGNS SHALL BE ACCOMPANIED BY THE EQUIVALENT VERBAL DESCRIPTION LOCATED DIRECTLY BELOW THE PICTOGRAM. THE BORDER DIMENSION OF THE PICTOGRAM IS A MINIMUM OF 6" IN HEIGHT. PICTOGRAM TO BE CENTERED 60" ABOVE FINISHED FLOOR ON THE DOOR. LETTERS & NUMBERS TO HAVE A WIDTH-TO-HEIGHT RATIO BETWEEN 3 : 5 & 1 : 1 AND A STROKE WIDTH-TO-HEIGHT RATIO BETWEEN 1 : 5 & 1 : 10. CHARACTERS AND NUMBERS ON SIGNS ARE A MINIMUM OF 3" IN HEIGHT. CHARACTER AND BACKGROUND OF SIGNS IS EGGSHELL, MATTE, OR OTHER NON-GLARE FINISH. CHARACTERS CONTRAST WITH THEIR BACKGROUND (LIGHT CHARACTERS ON A DARK BACKGROUND, OR DARK CHARACTERS ON A LIGHT BACKGROUND.

TOILET ROOM ACCESSORIES

ITEM	MANUFACTURER	FURN. BY	INST. BY
GRAB BAR 48"	BRADLEY 8170-0014800	G.C.	G.C.
GRAB BAR 36"	BRADLEY 8170-0013600	G.C.	G.C.
TOILET PAPER DISPENSER	BRADLEY 5411	G.C.	G.C.
HAND SOAP DISP (PUMP TYPE)	BRADLEY 6437	G.C.	G.C.
ELECTRIC HAND DRYER	WORLD DRYER MODEL RA	G.C.	G.C.
MIRROR & MIRROR SHELF	BRADLEY 705-24"X32"	G.C.	G.C.

1 HANDICAPPED RESTROOM ENLARGED PLAN & SCHEDULE 1/2"=1'-0"

NOTES:

1. FLUSH VALVE SHALL REQUIRE A MAXIMUM OF 3 LBS. OPERATING PRESSURE, TYP.
2. 3'-0" WIDE TOILET ROOM DOORS TO HAVE LEVER HANDLES W/ PRIVACY BUTTON LOCKS. DOORS TO HAVE SELF-CLOSERS SET TO MAX. 8 LBS. PUSH/PULL PRESSURE.
3. INSULATE ALL HOT WATER PIPES AND DRAINS BELOW LAVATORIES. ELIMINATE ALL SHARP EDGES.
4. WASTE RECEPTACLES & ALL ACCESSORIES SHALL BE MOUNTED W/ ALL OPERABLE PARTS WITHIN 40" OF THE FINISHED FLOOR.

CEILINGS ARE ENAMEL PAINTED GYP. BD.
WALLS ARE GLAZED CERAMIC TILE, FLOOR TO CEILING.
FLOORS ARE QUARRY TILE W/ 6" COVED BASES.

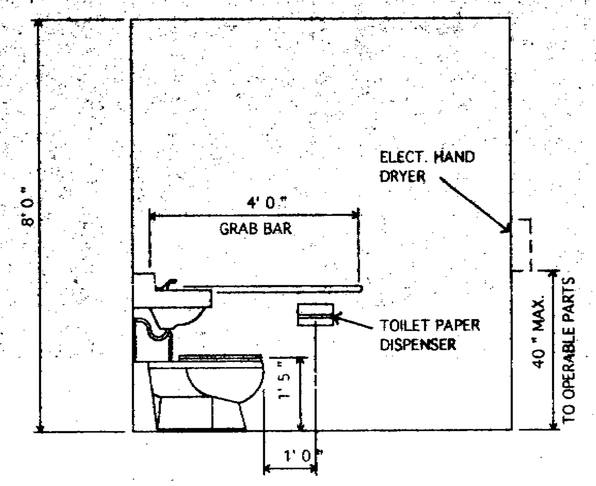

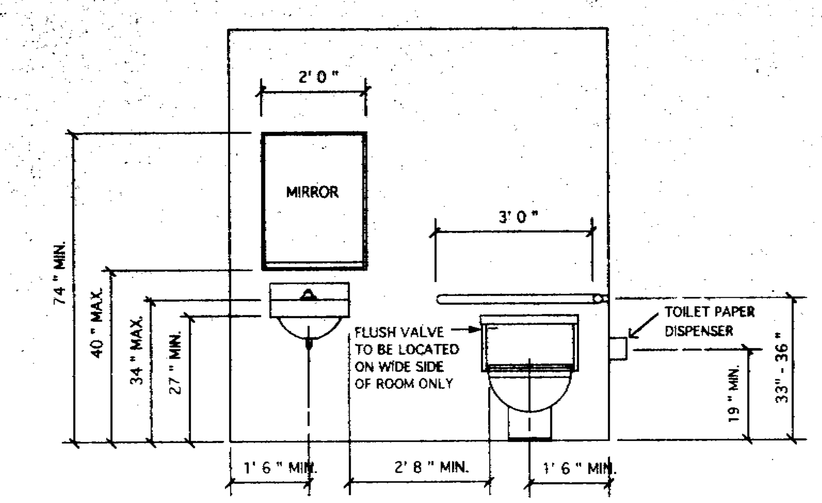

2 HANDICAPPED RESTROOM ELEVATIONS 1/2"=1'-0"

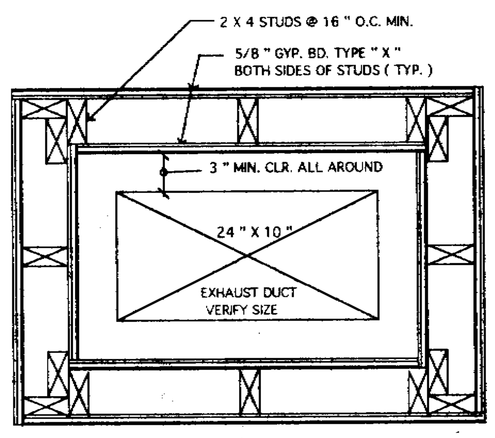

3 1 HR. DUCT ENCLOSURE 1 1/2 " = 1'-0 "

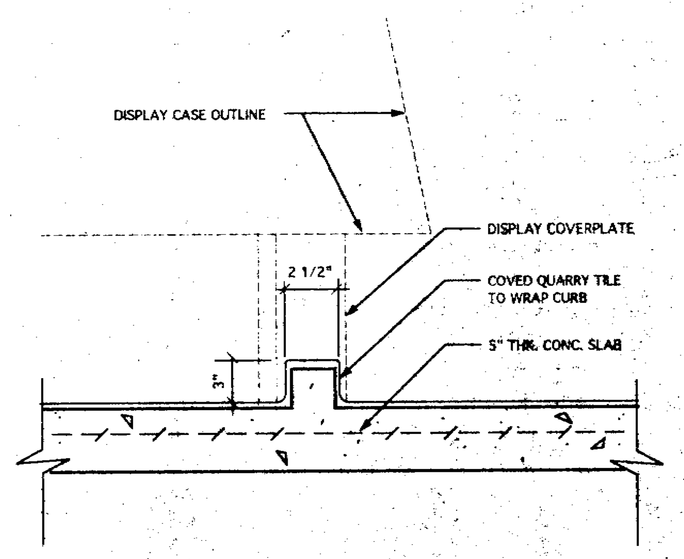

4 CTR. CURB @ REF. DISP. CASE 1-1/2" = 1'-0"

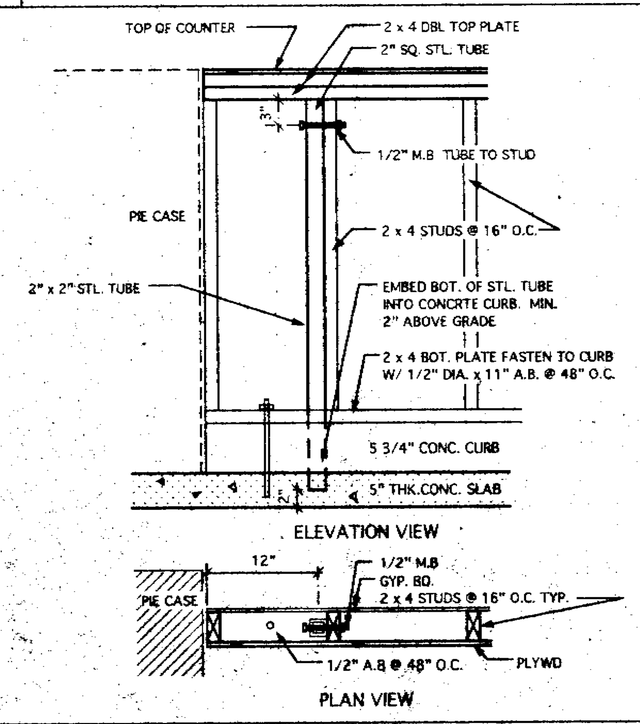

5 COUNTER ENDWALL SUPPORT 1" = 1'-0"

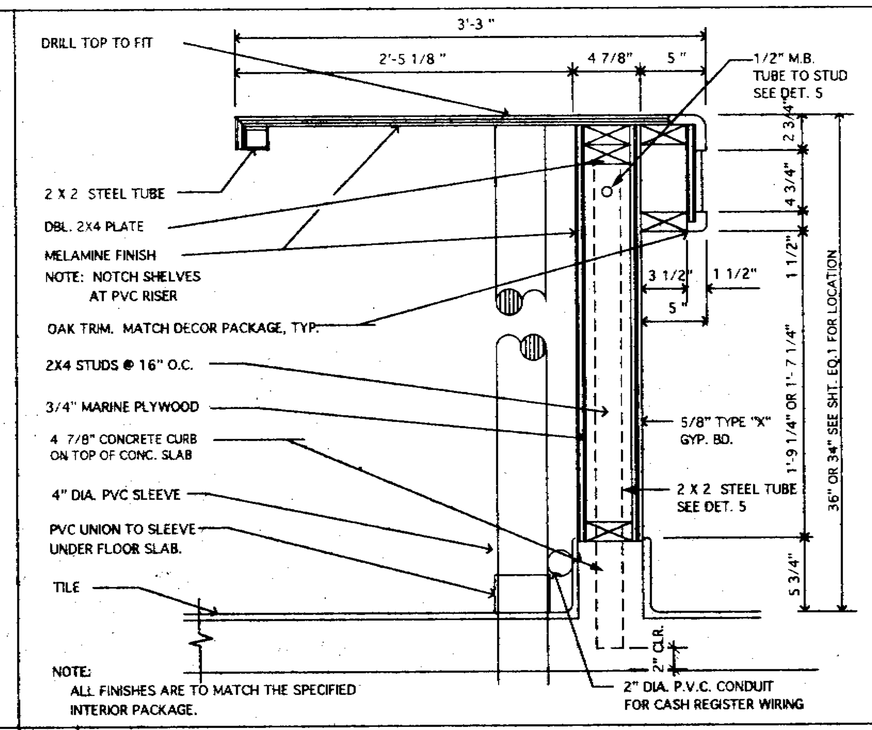

6 SVC COUNTER DETAIL 1-1/2" = 1'-0"

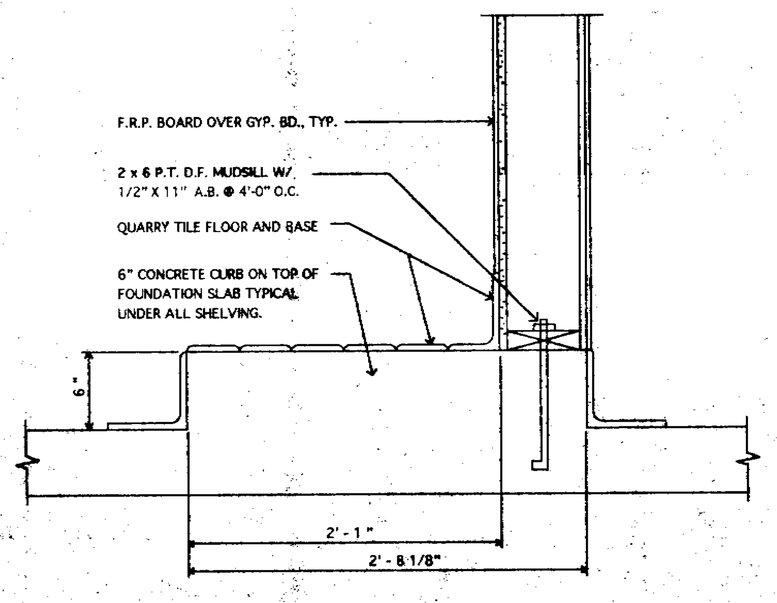

7 SHELF CURB TO WALL 1 1/2" = 1'-0"

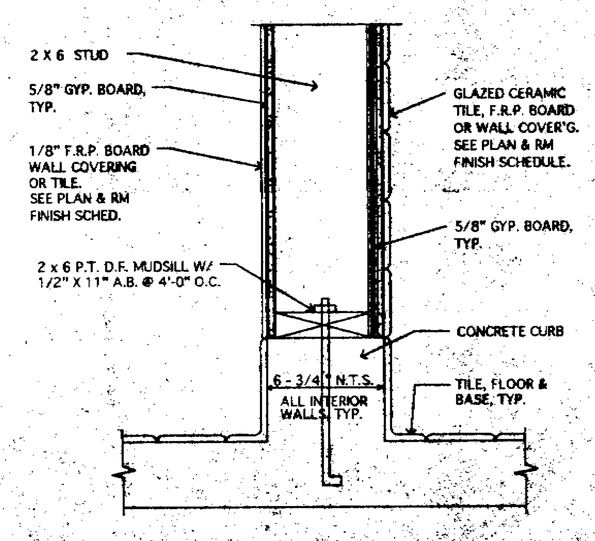

8 INT CURB TO WALL 1 1/2" = 1'-0"

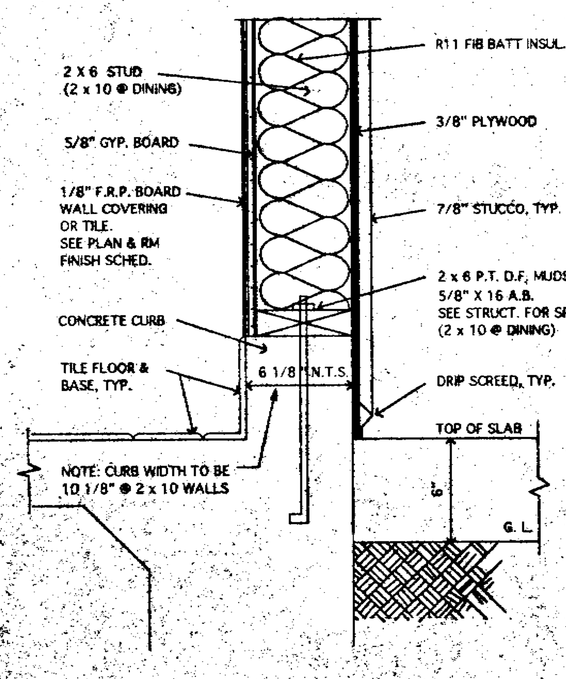

9 EXT CURB TO WALL 1 1/2" = 1'-0"

PLAN CHECK APPROVAL
AUG 0 9 1996
KUTZMANN & ASSOCIATES

9672260 20

Copyright 1996
EDWIN BRUCE ASSOCIATES. All designs drawings, and written material appearing herein, are protected and constitute original and unpublished work of the Architect and may not be copied, revised, re-used or disclosed without the written consent of the Architect. Equipment manufactured by others is excluded. Drawings and specifications are instruments of architectural service, and shall remain the property of the Architect. Use is restricted to the site for which they were prepared.

EDWIN BRUCE
Associates
Architects
A.I.A.
1625 The Alameda
Suite 610
San Jose, CA.
95126
Ph. 408/995 5701
Fax 408/995 5022

LICENSED ARCHITECT EDWIN BRUCE NO. C-14 REN. 6-3 STATE OF CA

KFC

K.F.C. JENSEN
CORNER OF BASCOM AVE. AND NAGLEE AVE.
SAN JOSE CALIFORNIA

JULY 22, 1996	DATE
D.C.	DRAWN
1/4 = 1'-0"	SCALE
9405	JOB NO.

A-10
OF 46

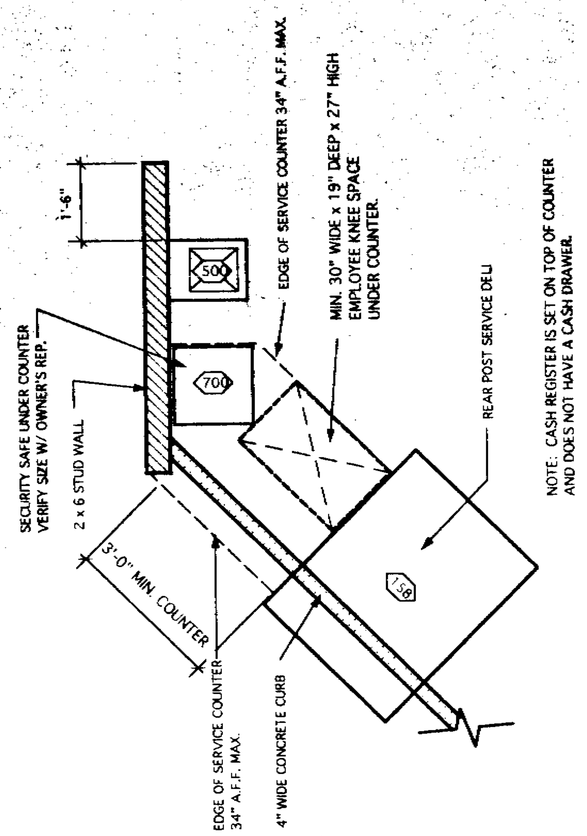

H.C. COUNTER PLAN

1/2" =1'-0"

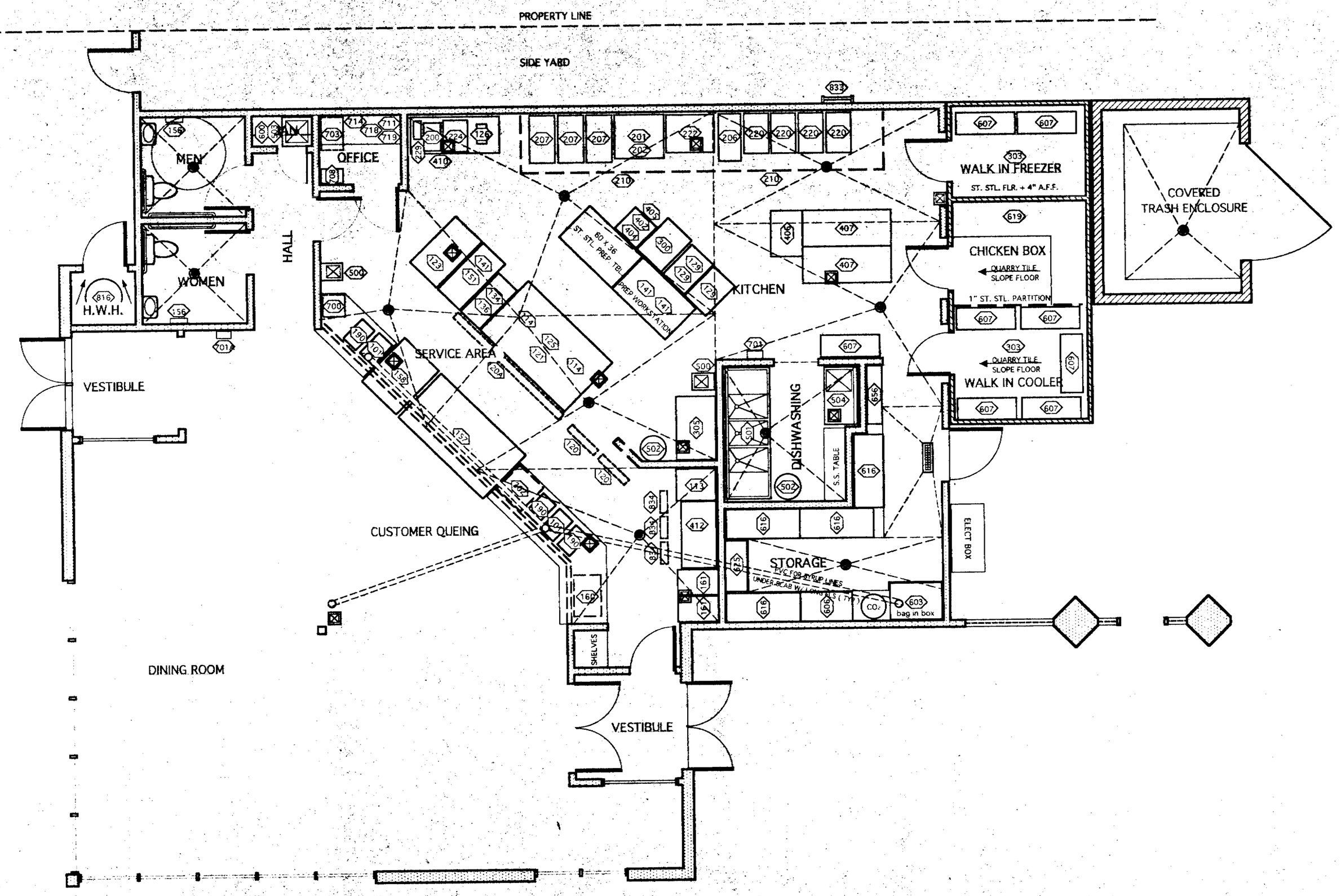

EQUIPMENT PLAN

9672260

21

Copyright 1996
EDWIN BRUCE ASSOCIATES. All designs drawings, and written material appearing herein, are protected and constitute original and unpublished work of the Architect and may not be copied, revised, re-used or disclosed without the written consent of the Architect. Equipment manufactured by others is excluded. Drawings and specifications are instruments of architectural service, and shall remain the property of the Architect. Use is restricted to the site for which they were prepared.

EDWIN BRUCE
Associates
Architects
A.I.A.
1625 The Alameda
Suite 610
San Jose, CA.
95126
Ph. 408/995 5701
Fax 408/995 5022

LICENSED ARCHITECT EDWIN G. BRUCE NO. C-14... REN. 5-2... STATE OF CALIFORNIA

KFC

K.F.C. JENSEN
CORNER OF BASCOM AVE. AND NAGLEE AVE.
SAN JOSE CALIFORNIA

MAY 24, 1996	DATE
DMC	DRAWN
1/4" = 1'-0"	SCALE
9405	JOB NO.

EQ-1

21 OF

EQUIPMENT SCHEDULE

CODE	QTY.	DESCRIPTION	MFG. AND MODEL NO.	ELECTRIC	GAS	WATER	SEWER	DIMENSIONS	REMARKS	FRN.	INST.
THRU-PUT (PACK TABLE - SERVING COUNTER - DRIVE-THRU)											
101	3	SODA SYSTEM	UNITED BEVERAGE TGI-5-1522	120V/9.8A/1.1KW		NOTE 4	3/4" INDIR	15"W 23"D 24 1/2 "H	W/ ACUFILL	KFC	GC/V
104		CUP DISPENSER	HETCO					LG 6 1/4 "DIA X-LG 7"DIA 23 3/8 "D	(2)LG. (1)X-LG.	KFC	GC
105		COFFEE CUP DISPENSER (D.T.	HETCO					6 1/4 " DIA 13"D	WALL MOUNT	KFC	GC
110		HEATED DRAWER	TOASTMASTER 3880A	115V/8.7A/1.0KW				29 15/16 "W 20 1/2 "D 22 1/4 "H		KFC	GC
113	1	REFRIGERATED DISPLAY UNIT	KOLPAX SPECIAL	120V/6.8A/ 1/3 H.P.				24 "W 24 "D 72 "H	CUSTOM BASE. GLASS DOOR	KFC	GC
114	2	HEATED DRAWER	TOASTMASTER 3880A	120V/8.5A				29 3/16 "W 21 3/4 "D 20 1/2 "H		KFC	GC
115		CONDIMENT HOLDER (D.T.)	TRENDCO					12 1/2 "W 13 1/8 "D 12 1/2 "H		KFC	GC
117		D.T. SPEAKER SYSTEM	3M D-15	120V/1 PH						KFC	GC
119		LID HOLDERS W/ STRAW	TRENDCO					7 3/4 "W 5 7/16 "D 4 7/8 "H	IN SMALLWARES KIT	KFC	GC
120	2	PICTORIAL UNIT	AMERICAN SIGN	120V/2.5A/.23KW				30 1/2 "W 22 1/2 "H		KFC	GC
120A	1	MENU BOARD	AMERICAN SIGN	120V/2.5A/.23KW				120 1/2 "W 30 5/8 "H		KFC	GC
121	1	8FT. PACK TABLE	FALCON FABRICATORS #96 BU-HD-1					96" W 52 1/2" H 36 1/2" H		KFC	GC
122		ACCESSORY EAR MUFF	FALCON FABRICATORS #66-334					18"W 13 1/2 "D 8 1/2 "H	1 1/2" COLD WATER @ FLOOR 1/4" FLARE COPPER @ UNIT	KFC	GC
123	1	40" ADD-ON	FALCON FABRICATORS #30 HCH	120V/13.7A				40"W 52 1/2 "D 36"H	JB 18" A.F.F.	KFC	GC
125	1	8 FT. HEATED DISPLAY UNIT	HENNY PENNY #HCW-5	208V/20A/3 PH		NOTE 4	3/4 " INDIR.	8 FT.W 29 3/4 "D 32 3/4 "H	TWO TIER	KFC	GC
126	1	COFFEE BREWER	BUNN-O-MATIC VPRN OR EQUAL	120V/15A				16"W 8"D 20"H	LEASE FROM LOCAL SUPPLIER	KFC	GC/V
127		SPEAKER/CRADLE	3M 78-8016-9810-7OSM					13 1/4 "W 9 3/4 "D 10 3/8 "H	BEIGE COLOR, SWIVEL & TILT CRADLE	KFC	GC/V
128		SPEAKER VOLUME CONTROL							RECESS JB IN BULKHEAD	KFC	GC
129	3	WARMING CABINET	HENNY PENNY HC-900 / HETCO	120V/17.5A/2KW				24 3/4 "W 31 3/4 "D 71 1/4 "H		KFC	GC
130		CONDIMENT HOLDER W/ CLIPS	TRENDCO					22"W 10"D 6"H		KFC	GC
131		ICE TEA DISPENSER	CECILWARE #5-3 TRENDCO					9"W 15 1/2 "D 17 1/2 "H	3 GAL. CAP., IN SMALLWARES KIT	KFC	GC
133		SANDWICH ASSEMBLY TABLE	FALCON FABRICATORS #19					32 1/2 "W 26"D 70"H		KFC	GC
134	1	FRIES DISPLAY TABLE	WASSERSTROM #17					20 1/2 "W 44 "D 37"H		KFC	GC/V
135		PATTY WARMER	HATCO HS2-785	115V/8A				22 1/2 "W 12"D 17"H		KFC	GC
136	1	FRIES TABLE HEAT LAMP	HATCO #HS2-837	115V/8A				20 1/2 "W 18"D 16 1/2 "H		KFC	GC
139		MAYO DISPENSER PACKAGE	TRENDCO					5 3/4 "W 1 1 1/4 "D 4 3/4 "H		KFC	GC
141	1	MICROWAVE OVEN	AMANA RFS8-SE	120V/14.6A/1.75KW				21 5/8 "W 17 5/8 "D 14 3/4 "H		KFC	GC
151	1	SANDWICH CONDIMENT TABLE	H & K	120V/13.7A/1 Ph				25 "W 52 1/2 "D 74 "H		KFC	GC
156	2	HAND DRYER	WORLD MP RA3 RECESSED	208V/11A/2.3KW				13 1/2 "W 3 1/2 "D 13 1/2 "H		KFC	GC
157	1	REAR POST SERVICE HOT FOOD	NAX CORPORATION	208V/20A/1 Ph		NOTE 4	1 1/4" INDIR.	8'-2" W 50 "D 45 "H		KFC	GC
158	1	REAR POST SERVICE DELI	NAX CORPORATION	115V/20A/1 Ph				39 "W 50 "D 45 "H		KFC	GC
160	1	RECESSED TOPPING BAR	AIR SYSTEMS, INC. # TC 9016	120V/700W/1 Ph				34"W 22 1/4"D 6" H	W/ DOUGLAS NOZZLE DELUXE CUP DISPENSER BELOW (QTY.=1 HOLE) & BLAST CHILLER MOD. & ELEC. CONNECTIONS	KFC	GC
161	2	SOFT SERVE, FREEZER	TAYLOR MODEL 794	(2) 208V/60A/3 Ph				21"W 33"D 60"H		KFC	GC/V
162	1	GLYCOL-PAK REFRIGERATION UNIT	AIRDYNE # GP-3	208V / 13.7A / 3PH				50 "W 22 "D 36"H	ROOF MOUNTED, 1" & COPPER 914 OUT. MANIFOLD METRO MEL MODEL & ELECT. CONNECT TO BULK	KFC	GC/V
188		PORTABLE CHILLER	TRENDCO					13 1/2" W 22 3/4"D 14 1/2"H		KFC	KFC
189		AUXILLARY MENU BOARD	AMERICAN SIGN					18 1/4 "W 20 1/2 "D 5 1/4 "H	MOUNT BELOW COUNTER	KFC	KFC
190	3	CASH REGISTER	PAR	THIS EQUIPMENT TO BE ON A 120 V / 15 A DEDICATED CIRCUIT W/ ISOLATED GROUND. MATCHING TWIST LOCK WALL OUTLETS OR CONNECTION CABLE						KFC	KFC
191		CASH DRAWER W/MTG BRACKET	PAR							KFC	KFC
192		PACK TABLE MONITOR	PAR							KFC	KFC
193		RECEIPT PRINTER	PAR							KFC	KFC
194		MANAGER'S WORK STATION	PAR							KFC	KFC
195		MONITOR WALL SHELF	PAR							KFC	KFC
196		MONITOR CEILING BRACKET	PAR							KFC	KFC
197		BUMP BAR	PAR					13"W 14 1/2 "W 4"H	SEE SHEET E3 FOR LOCATIONS	KFC	KFC
198		MONITOR SHELF W/OPS ADD ON	PAR							KFC	KFC
COOKING											
200	1	CORN COOKER	A.J. ANTUNES MODEL CCC-20KFC	120V/14.6A/1.75 KW				13"W 23"D 13"H		KFC	GC
201	1	CONVECTION OVEN	VULCAN HART 60 M - NATURAL GAS	120V/8A/60 HZ	3/4"			40 "W 36 "D 60 "H		KFC	GC
202	3	OVEN COMPUTER	FASTRON #821AJFQ-KFC	115V/.5A				8 1/4 "W 4 1/2 "D 8"H	GC TO PROVIDE ELEC CONN 60" AFF	KFC	GC
206	1	2 BURNER RANGE	U.S. RANGE #1836-7M-3 W/ STAND		3/4"			17 "W 38 1/4 "D 19 1/2"H	6000 BTU/HR	KFC	GC
207	3	OPEN FRYER W/ COMPUTER	PITCO #18WKS/FAST COMPUTER	115V/5A/1Ph	3/4"			20 1/8 "W 38 1/4 "D 48"H	150,000 BTU/HR EA. GAS NPT	KFC	GC
208		FILTER/DUMP TABLE	FALCON FABRICATORS #65-877	120V/7.2A				24 1/4 "W 35 1/2 "D 36"H	RECEPT. 18" A.F.F. INTERNAL EASTRON COMPUTER TIMER	KFC	GC
209		DRAIN BAFFLE	FALCON FABRICATORS #66-219					14"W 8 1/4 "D 5 3/4 "H		KFC	GC
210	2	12'-0" EXHAUST HOOD "TYPE I"	AIR-KING	115V/4A				12'-0" W 50"D 24"H	PREPIPED FOR FIRE SUPPRESSION	KFC	GC
215		SHORTENING FILTER	WINSTON #302A01E21	120V/15A				20 1/2 "W 33 1/4 "D 20 7/8 "H		KFC	GC
220	4	6HD COLLECTRAMATIC	WINSTON #FCR6201	208V/30/29.2A/10.5KW				20"W 33"D 43 3/4 "H EACH	WIRE FOR 6 UNITS	KFC	GC
222	1	ROTISSERIE OVEN	COOKING SYSTEMS INTERNATIONAL	208V/3Ph/14.2KW				39" W 31" D 41 "H		KFC	GC
224	1	VEGETABLE STEAMER	GROEN	208V/3Ph/2.5KW				22"W 30"D 20 "H		KFC	GC
226		ROTISSERIE OVEN	VARIOUS MANUFACTURERS	208V/30/27.7A				14 1/8"W 5"D 30 "H		KFC	GC
229	1	HOT WATER MACHINE	BUNN #HW15	208V/15A/1Ph		NOTE 4		7"W 12 1/2 "D 25 5/8 " H	WALL MOUNT AT 48" AFF	KFC	GC
239		TRIPLE VAT FRYER	PITCO FRIALATOR 3-7 WKS UFM	115V/8A	1"			30 1/2 "W 33 3/8 "D 47 1/4 "H	165,000 BTU/HOUR	KFC	GC
241		ROTISSERIE EXHAUST HOOD	VARIOUS MANUFACTURERS					44"W 42"D 5"H	TYPE II EXHAUST ONLY	KFC	GC
REFRIGERATION											
300	1	STAGING FREEZER ON WHEELS	DELFIELD 6125S	115V / 9.5A / 1/3HP				25 1/2 "W 32 1/4 "D 79 1/2 "H	DUTCH DOOR W/ RACK STAND	KFC	GC
302	1	UNDERCOUNTER REFRIGERATOR	DELFIELD 406-CA	115V/4A/60HZ./1/4H.P.				27"W 27 1/4 "D 33"H	WITH CASTERS	KFC	GC
303	2	WALK-IN COOLER/FREEZER/ STORAGE COMBINATION UNIT	KOLPAK OR ICS	208V/30/(2) 18.3A				9'-8" X 22'-1 1/2"	SEE NOTE 3 & 6	KFC	KFC
305	1	ICE MACHINE (CUSTOM)	SCOTTSMAN MH. 950	115V/19.3A/ 3/4 H.P.		NOTE 4	3/4 " INDIR	30"W 31 1/2 "D 67 1/2 "H		KFC	KFC
312		REFRIGERATED DISPLAY CASE	SCHMIDT SYSTEM II MODEL# SKRR-LS-36	120V/6.8A/ 1/3 H.P.				59" W 31 13/16"D 36" H	* REQUIRES REDUCED CURB WIDTH	KFC	GC
PREPARATION											
401		BISCUIT TABLE	FALCON FABRICATOR'S #66-107					65"W 31"D 60"H		KFC	GC
402	1	MIXER TABLE	FALCON FABRICATORS #66-174					24"W 24"D 22"H		KFC	GC
403		FOOD CUTTER	BRICKER PRODUCTS #8-12-4S	115V/14.8A/1HP				21"W 30"D 25"H		KFC	GC
404	1	MIXER	HOBART A 200	115V/1 PH/ 1/3 HP				20 "W 24 "D 30 1/4 "H	W/ P KNIFE, 2 BOWLS & WHIP	KFC	GC
405	1	MIXER TIMER	FAST MT. 200	120V/12 KW/ 1/3 H.P.				5 1/4 "W 10 1/4 "H	MOUNT TO TOP OF MIXER	KFC	GC
406	1	MARINATOR	QUALITY QMM-4	115V/4.6A/ 1 Ph.		1/2" COLD	INDIR.	37 1/2 "W 26"D 39 1/2"H		KFC	GC
407	2	DOUBLE BREADER W/SIFTER	AIRKING	115V/1 Ph/ 1/6 H.P.				51"W 61"D 53 1/8"H		KFC	GC
408		ADD-A-SHELF	BRICKER BAAS-14SS					14"W 36"D		KFC	GC
410	1	WORK TABLE W/ BACKSPLASH	FALCON FABRICATORS #66-207					72"W 30"D 34"H		KFC	GC
412	1	WORK TABLE W/ BACKSPLASH	FALCON FABRICATORS					48"W 30"D 34"H		KFC	GC
419		WORK TABLE W/O BACKSPLASH	FALCON FABRICATORS					54"W 36"D 34"H		KFC	GC
420	1	DELIVERY RACK & SHELVES		(3) ISOLATED 4-PLEX OUTLETS FOR COMPUTERS				VERIFY		KFC	GC
421		OVEN STAND	WASSERSTROM					40"W 30"D 34"H		KFC	GC
422		ROTISSERIE PREP TABLE	FALCON FABRICATORS					26 3/4 "W 16"D 34"H		KFC	GC
WASHING AND CLEANING											
500	2	HANDSINK	WASSERSTROM			1/2 "H & C	1 1/4 " DIR	17 1/2 "W 14 1/2 "D 12"H		KFC	GC
501	1	3 COMPARTMENT SINK	FALCON FABRICATORS #66-320 OR LAMBERTSON #922			H & C	2" DIRECT	108"W 35"D 41 1/2 "H	WITH PREREGS FAUCETS TO HAVE PLAIN END ONLY	KFC	GC
502	2	TRASH CONTAINER	CONTINENTAL MFG. TRENDCO					20"DIA 31"H	32 GAL. CAPACITY, IN SMALLWARES	KFC	GC
503	1	FLOOR MOUNTED MOP SINK	FLORESTONE			H & C	2" DIRECT	24"W 24"D 6" H		GC	GC
504	1	FOOD PREP SINK	EAGLE FN2118-1-18R			H & C	INDIRECT	47"W 26 1/2"H	FAUCETS TO HAVE PLAIN END ONLY	KFC	GC

EQUIPMENT SCHEDULE

CODE	QTY.	DESCRIPTION	MFG. AND MODEL NO.	ELECTRIC	GAS	WATER	SEWER	DIMENSIONS	REMARKS	FRN.	INST.
STORAGE											
600	16	WALL SHELF 18 X 48	FALCON HODGES (PLATED)					48"W 18"D	MOUNT BOT. OF SHELF @ 7'-0" AFF	KFC	GC
602		CHICKEN DOLLY	LOU. MILL SUPPLY #KFCPE84065					16"W 24"D 1 1"H		KFC	GC
603	1	MODULAR BAG-IN-BOX RACK	MARCO					33"W 19"D 61"H	SUPPLIED &INSTALLED BY SODA SUPPLIER	KFC	GC/V
604		MARINATED CHICKEN DOLLY	NORMANDIE MET. FAB. INC.					18 1/4 "W 26 1/2 "D 44"H	4 REQUIRED	KFC	GC
605		SALAD DOLLY S/S	FALCON FAB. 66-145					22"W 27"D 42"H		KFC	GC
606	1	SHELVING UNIT 24 X 42 X 84	FALCON HODGES (EPOXY) 5 TIER SHELVING					42"W 24"D 84"H		KFC	GC
607	8	SHELVING UNIT 18 X 48 X 84	FALCON HODGES (EPOXY) 5 TIER SHELVING					48 "W 18 "D 84 "H			
608		BUN STOR. DOLLY & TRAYS	TRENDCO #184318					25 3/4 "W 21 1/2 "D 4 1/2 "H	IN SMALLWARES KIT	KFC	GC
609	1	DUNNAGE RACK/ SHORTENING	NEW AGE #KFC					24"W 24"D 12"H		KFC	GC
610		WALL SHELF 18 X 36	FALCON HODGES (EPOXY)					36"W 18"D	MOUNT BOT. OF SHELF @ 6'-0" A.F.F.	KFC	GC
614	1	SHELVING UNIT 24 X 48	FALCON HODGES (EPOXY) 5 TIER SHELVING					24"W 48"D 84"H			
615	1	SHELVING UNIT 12 X 36	FALCON HODGES (EPOXY) 5 TIER SHELVING					12"W 36"D 84"H			
616	4	SHELVING UNIT 24 X 60	FALCON HODGES (EPOXY) 5 TIER SHELVING					24"W 60"D 84"H			
617	3	SHELVING UNIT 12 X 42	FALCON HODGES (EPOXY) 5 TIER SHELVING					12"W 42"D 84"H			
618		SHORTENING SHUTTLE	WORCHESTER IND.PROD. #PE8802					15 1/2 "W 9 5/8 "D 48 5/8 "H		KFC	GC
619	1	CHICKEN CRATE VAT	AMF WYOTT					CUSTOM 29 1/2 "D 10 "H		KFC	GC
620		WALL SHELF 18 X 36	FALCON HODGES (PLATED)					36"W 18"D	MOUNT BOT. OF SHELF @ 6'-10" AFF	KFC	GC
625	1	SHELVING UNIT 18 X 42 X 84	FALCON HODGES (EPOXY) 5 TIER SHELVING					42"W 18"D 84"H	MOUNT BOT. OF SHELF @ 6'-0" A.F.F. SEE DETAIL 12 ON SHEET A-7	KFC	GC
633		CEILING HUNG SHELF 18 X 42	FALCON HODGES (PLATED)					42"W 18"D	MOUNT BOT. OF SHELF @ 6'-0" A.F.F. SEE DETAIL 12 ON SHEET A-7	KFC	GC
643		CEILING HUNG SHELF 18 X 66	FALCON HODGES (PLATED)					66"W 18"D		KFC	GC
645		SHELVING UNIT 24 X 60 X 84	FALCON HODGES (PLATED)					60"W 24"D 84"H		KFC	GC
650		WALL SHELF 18 X 24	FALCON HODGES (EPOXY)					24"W 18"D	MOUNT BOT. OF SHELF @ 6'-0" A.F.F.	KFC	GC
654		SHELVING UNIT 18 X 48 X 84	FALCON HODGES (EPOXY)					48"W 18"D 84"H		KFC	GC
655		DUNNAGE RACK 24 X 60	NEW AGE					60"W 24"D 12"H		KFC	GC
656	1	SHELVING UNIT 12 X 48 X 84	FALCON HODGES (PLATED)					48"W 12"D 84"H		KFC	GC
657		SHELVING UNIT 24 X 54 X 84	FALCON HODGES (PLATED)					24"W 54"D 84"H		KFC	GC
658		DOUBLE STACK WALL SHELF 12x36	FALCON HODGES (EPOXY)					36"W 12"D	MOUNT BOT. OF SHELF @ 6'-0" A.F.F.	KFC	GC
661		FUTURE CAN CADDY	NEW AGE #1250					25"W 35"D 71"H		KFC	GC
662		SHELVING UNIT 18 X54 X 84	FALCON HODGES (PLATED)					54"W 18"D 84"H		KFC	GC
MISCELLANEOUS											
700	1	SAFE (HI SECURITY)	CINCY SAFE CO. #2820/ALLIED-GARY	120V/1 PH.				20"W 16"D 28"H		KFC	GC
701	1	FIRE EXTINGUISHER RATED 40-BC						7 1/2 "DIA 23"H	MOUNT TOP AT 4'-0" A.F.F.	GC	GC
701A	1	FIRE EXTINGUISHER RATED 2A:10-BC						7 1/2 "DIA 23"H	MOUNT TOP AT 4'-0" A.F.F.	GC	GC
703	1	FILE CABINET (2 DRAWER)	HON #WA312CPT					18"W 26 1/2 "D 28"H		KFC	GC
704		FILE CABINET (2 DRAWER)	HON #WA252PT					15"W 18"D 29"H		KFC	GC
705		STOOL	LOU. MILL SUPPLY #1702					18"H		KFC	GC
706		OFFICE CHAIR	LOU. MILL SUPPLY							KFC	GC
707		VIDEO TRAINING UNIT	TRAINING #AG550	120V/3A				15 3/8 "W 13 3/8 "D 1 1 3/8 "H		KFC	GC
708	1	LOCKERS (2 SECT. @ 6 HI.)	LOU MILL 5362-2					12"W 18"D 72"H		KFC	GC
709		BULLETIN BOARD	TRENDCO #38650					24"W 36"H		KFC	GC
710		CALCULATOR	TRENDCO	SOLAR				5"W 6"D 2"H		KFC	GC
711	1	ELECTRONIC SECURITY SYSTEM	SILENT WATCHMAN	120V/1Ph.							
712		5 TIER HORIZ. TRAYS	TRENDCO #96018					15"W 8 1/2 "D 12"H	LEGAL SIZE, IN SMALLWARES	KFC	GC
713		4 TIER HORIZ. TRAYS	TRENDCO #96017					15"W 8 1/2 "D 9"H	LEGAL SIZE, IN SMALLWARES	KFC	GC
714	1	HVAC / LIGHT CONTROL SYSTEM		120V/1Ph.						KFC	GC
715		HEAR SIGHT COMM. MODULE	WASSERSTROM #907650					2 1/2"W 2 1/2"H		KFC	GC
717		NAPKIN DISP.	TRENDCO #973					4"W 5"D 6 1/2 "H	SURFACE MOUNT, IN SMALLWARES KIT	KFC	GC
718	1	BACKGROUND MUSIC SYSTEM									
719	1	SMOKE ALARM PANEL									
727		EXTERIOR TRASH RECEPTACLE	WAUSAU TILE					14 7/8 " 14 7/8 " 29 7/8 "H		KFC	GC
728		STRAW DISP.	TRENDCO #HAL-WSD-100					7 1/8 "W 9 1/2 "D 8 1/4 "H	SURFACE MOUNT, IN SMALLWARES KIT	KFC	GC
729		EMPLOYEE TABLE	DECOR SUPPLIER					48"W 24"D 30"H		KFC	GC
730		QUAD MARKETING PANEL		120V/1A						KFC	GC
731		BULK CO2 SYSTEM								KFC	V
732		HOSE HANGER	TRENDCO							KFC	GC
BUILDING ITEMS											
800		DRIVE-THRU WINDOW	HORTON AUTOMATICS 8100 FLUSH SERIES	120V/15A				53 1/2"W "D 38 "H		KFC	GC
802		D/T MENUBOARD & SPEAKER POST	AMERICAN SIGN	120V/3.2A					SEE SITE PLAN FOR LOCATION	KFC	GC
803		LOGO PANEL	VARIOUS SUPPLIERS					32"W 1/8 "D 9"H	SEE DOOR SCHEDULE SHT. A9 FOR SPECS.	KFC	GC
804		CUPOLA TOWER	VARIOUS SUPPLIERS	120V/8A				70 1/2 "W 70 1/2 "D 111 3/4 "H		KFC	GC
805		EXTERIOR ENTRY LIGHT	RUEFF/ SPECIFIED LIGHTING	120V/.25A					SEE SHEET E2 FOR SPECIFICATIONS	KFC	GC
807		YARD LIGHT	HUBBELL/EDR	120V					SEE SITE PLAN FOR TYPE & QTY.	KFC	GC
808		EXTERIOR SIGNAGE	VARIOUS SUPPLIERS	120V					SEE SITE PLAN FOR TYPE & QTY.	KFC	GC/V
809		WIRELESS D.T. SPEAKER SYSTEM	VARIOUS SUPPLIERS							KFC	GC/V
810		TRANSOM PANEL PACKAGE	PALMER						SEE SHT. A9 FOR TYPE & QUANTITY	KFC	GC
812		COLONEL MUG DECAL	NIEHAUS CORP. #KFC							KFC	GC
813		KITCHEN TILE PACKAGE	INTERAMICS							KFC	GC
814		HVAC/LIGHT CONTROL PANEL	TROPIC-KOOL/ LDI	120V/3A HIGH SIDE 120V/3A LOW SIDE				15"W 4"D 34"W/ 2" FLANGE		KFC	GC
815		SMOKE ALARM PANEL	TROPIC-KOOL/SIMPLEX	24V/.25A				16 1/4 "W 4 1/4 "D 13 1/2 "H	E.C. TO INSTALL. SEE NOTE 6.	KFC	GC
816	1	WATER HEATER 80 GAL.	STATE 180,000 BTU	120V/1A		1"	3/4 "C	28 "DIA. 72 "H	6" VENT THRU ROOF	KFC	GC
817		TOILET ACCESSORIES	RUEFF							KFC	GC
818		SWITCH GEAR PACKAGE	SOUTHLAND ELECTRIC	208V/30/600A				SEE SPEC. FOR SIZE		GC	GC
824		AWNING SYSTEM	VARIOUS MANUFACTURERS							KFC	GC/V
825		BACKGROUND MUSIC SYSTEM	VARIOUS MANUFACTURERS	120V/.5A						KFC	GC
832		CORNER GUARDS	DECO GUARD							KFC	GC
833	1	LADDER	BY GENERAL CONTRACTOR						FASTEN LADDER TO ROOF & FLOOR STRUCTURE		
834	3	TCBY MENU BD.	MAIN STREET SYSTEM					18"W x 27"H	FASTEN TO VALANCE		

EQUIPMENT NOTES

EQUIPMENT REFERENCE	
ALL	1. COORDINATE INITIAL START-UP WITH KFC CONSTRUCTION SUPERVISOR.
101	2. PVC CONDUIT FOR SYRUP LINES TO BE SEALED AT EACH END WITH DAP "BUTYL-FLEX" WHITE SEALANT OR EQUAL AFTER LINES ARE IN PLACE.
303	3. KOLPAK - G.C. TO PROVIDE UTILITIES HOOKUP OF WALK-IN COOLER/FREEZER/STORAGE BOX PER INSTRUCTIONS FURNISHED WITH UNIT. THIS IS TO INCLUDE UNLOADING, SET-UP, ASSEMBLY, LEVELING, AND HOOK-UP. REFRIGERATOR INSTALLED BY KFC. ICS- KFC TO PROVIDE COMPLETE INSTALLATION OF WALK-IN COOLER/FREEZER/STORAGE UNIT. THIS IS TO INCLUDE UNLOADING, SET-UP, ASSEMBLY & LEVELING. HOOK-UP OF ELECTRICAL IS ALL WORK NECESSARY. NO HVAC WORK IS NECESSARY. PROVIDE NECESSARY UTILITIES TO POINT.
229, 224, 305, 101	4. 1/2 " COLD WATER TO VALVE. 1/4 " FLARED COPPER TO UNIT.
815	5. SMOKE ALARM TO INCLUDE 2 SMOKE DETECTORS AND ANNUNCIATOR PANEL.
303	6. UNIT HAS A UNIQUE SLOPED MEMBRANE ROOF CAP. CONTRACTOR IS TO SUBMIT SHOP DRAWINGS TO ARCHITECT FOR APPROVAL PRIOR TO PURCHASING UNIT.

ALL EQUIPMENT NOTED AS "INSTALLED BY G.C." SHALL HAVE ALL UTILITIES, CONNECTIONS, LEVELING ADJUSTMENTS, AND FINAL INSTALLATION EXECUTED BY G.C., INCLUDING INITIAL START-UP.

NOTE: SEE EQ-1 TO VERIFY QUANTITIES TAKE OFF.

BEST AVAILABLE COPY

9672260
22

Copyright 1996
EDWIN BRUCE ASSOCIATES. All designs, drawings, and written material appearing herein, are protected and constitute original and unpublished work of the Architect and may not be copied, revised, re-used or disclosed without the written consent of the Architect. Equipment manufactures by others is excluded. Drawings and specifications are instruments of architectural service, and shall remain the property of the Architect. Use is restricted to the site for which they were prepared.

EDWIN BRUCE
Associates
Architects
A.I.A.
1625 The Alameda
Suite 610
San Jose, CA.
95126
Ph. 408/995 5701
Fax 408/995 5022

LICENSED ARCHITECT EDWIN G. BRUCE NO. C-14546 REN. 3-31-97 STATE OF CALIFORNIA

KFC

K.F.C. JENSEN
CORNER OF BASCOM AVE. AND NAGLEE AVE.
SAN JOSE CALIFORNIA

JULY 22, 1996	DATE
D.C.	DRAWN
1/4 = 1'-0"	SCALE
9405	JOB NO.

EQ-2
OF 46

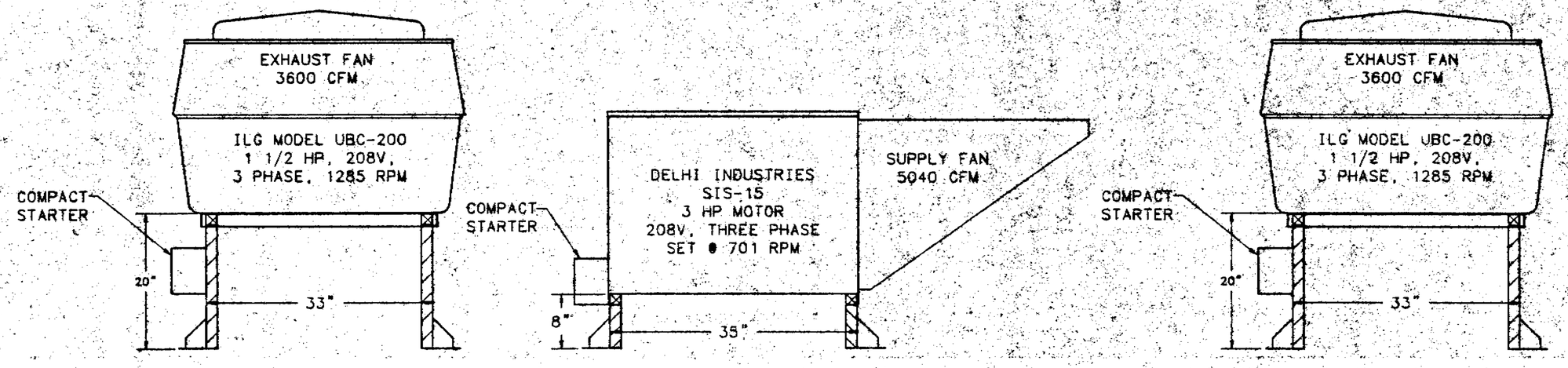

FAN INFORMATION

96 SERIES RANGE HOOD LISTINGS AND APPROVALS

I.C.B.O. E.S. REPORT NO. 3874

B.O.C.A. E.S. REPORT NO. 88-57

UL LISTED EXHAUST HOOD WITHOUT EXHAUST DAMPER PER UL STANDARD 710, FILE MH12944, FILE GUIDE YYCW, CONTROL NUMBER 55W8 IN ACCORDANCE WITH NFPA STANDARD 96 FOR USE WITH UL LISTED AUTOMATIC FIRE EXTINGUISHING SYSTEM FOR DUCT, HOOD, AND COOKING EQUIPMENT FIRE PROTECTION
NATIONAL SANITATION FOUNDATION LISTED
BOCA LISTED - REFER TO EVALUATION SERVICE REPORT NUMBER 88-57
ICBO LISTED - REFER TO EVALUATION SERVICE REPORT NUMBER 3874
NFPA 96 CONSTRUCTION - FABRICATED FROM 16 GAUGE 304 STAINLESS STEEL WITH ALL JOINTS AND SEAMS WELDED
U.L.C. LISTED HOOD FOR KITCHEN EXHAUST DUCTS, FILE NO. CR1944

EXHAUST AIR - SIZE FAN(S) TO EXHAUST 7200 CFM BASED ON 1.0" W.C. STATIC PRESSURE AT DUCT COLLAR PLUS DUCT AND FAN DISCHARGE RESISTANCE

MAKE-UP AIR - SIZE UNIT TO PROVIDE 5040 CFM OF UNTEMPERED AIR BASED ON 0.25" W.C. STATIC PRESSURE AT DUCT COLLAR

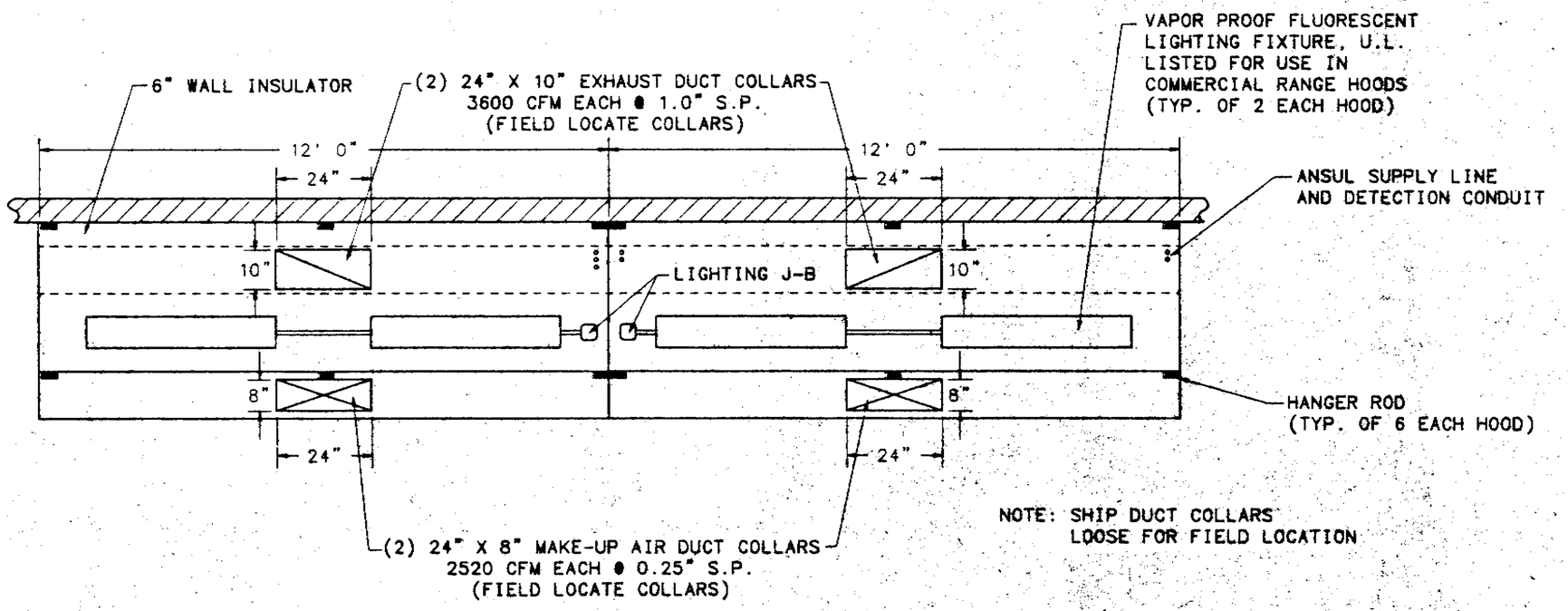

NOTE: SHIP DUCT COLLARS LOOSE FOR FIELD LOCATION

PLAN VIEW
SCALE 1/2" = 12"

ANSUL NOZZLES

A - FRYER NOZZLE #418117
B - RANGE NOZZLE #418118
C - FRYER NOZZLE #76782
D - PLENUM NOZZLE #56930
E - DUCT NOZZLE #56928

NOTE: NOZZLES A & B ON SEPARATE SYSTEM (TO 3 GAL REG RELEASE)
NOZZLES C1, D, & E ON SEPARATE SYSTEM (TO 3 GAL ADDITIONAL TANK)
NOZZLES C2 ON SEPERATE SYSTEM (TO 1.5 GAL REG RELEASE)

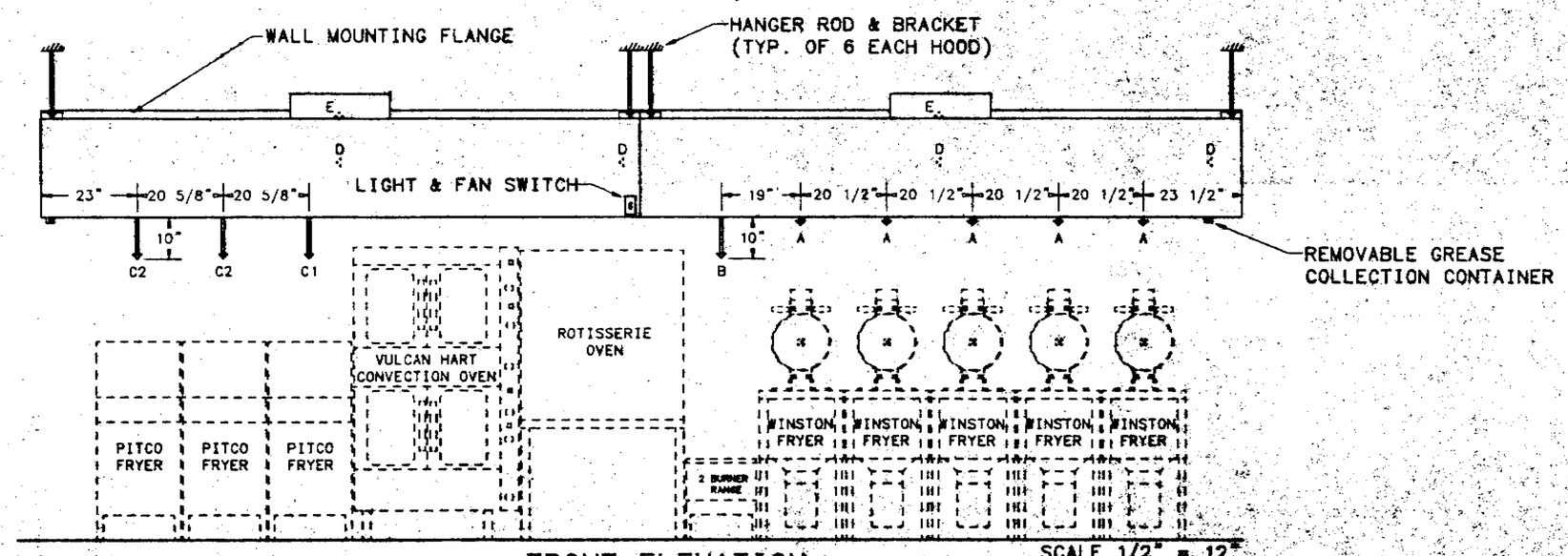

FRONT ELEVATION
SCALE 1/2" = 12"

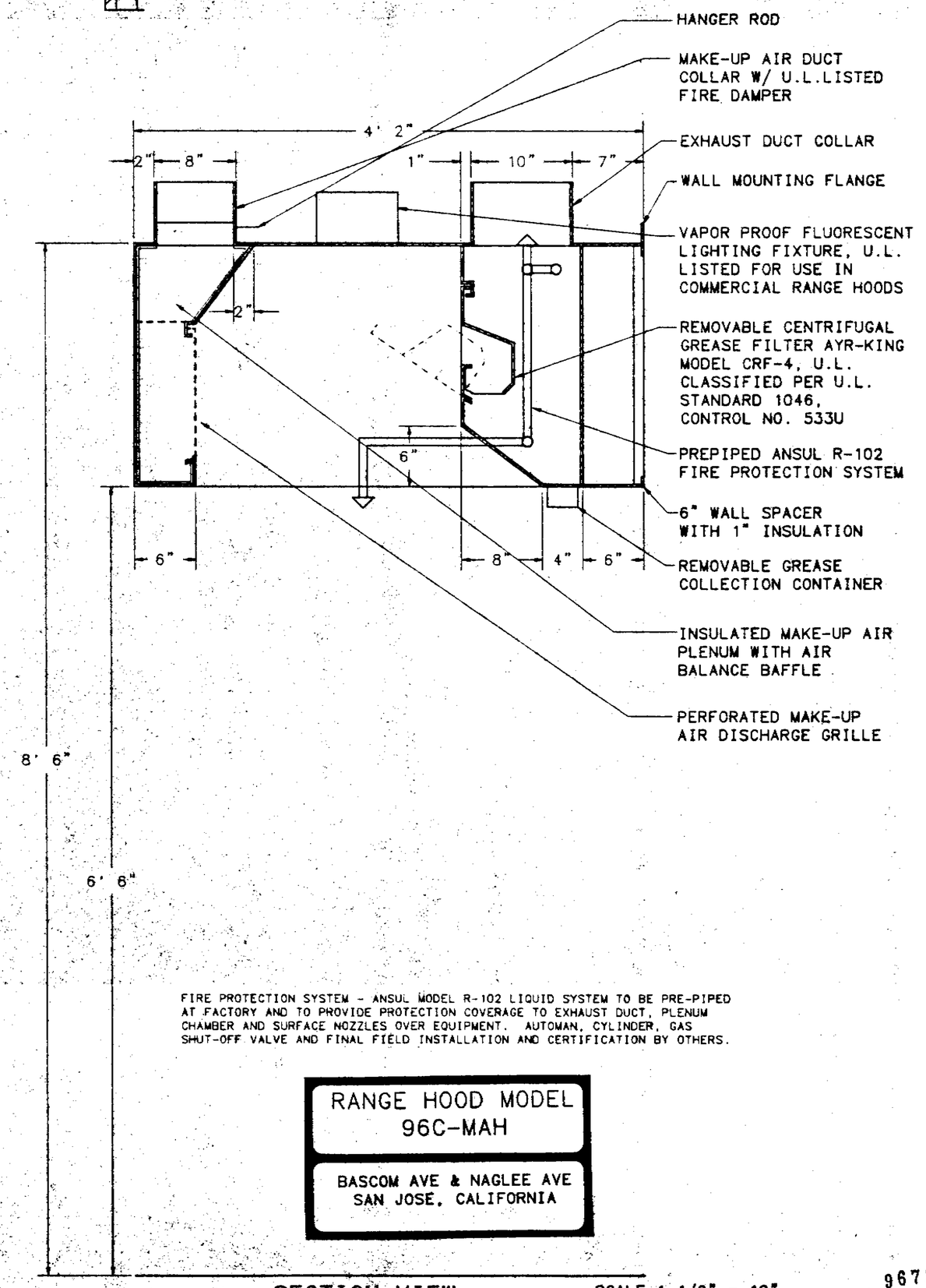

FIRE PROTECTION SYSTEM - ANSUL MODEL R-102 LIQUID SYSTEM TO BE PRE-PIPED AT FACTORY AND TO PROVIDE PROTECTION COVERAGE TO EXHAUST DUCT, PLENUM CHAMBER AND SURFACE NOZZLES OVER EQUIPMENT. AUTOMAN, CYLINDER, GAS SHUT-OFF VALVE AND FINAL FIELD INSTALLATION AND CERTIFICATION BY OTHERS.

RANGE HOOD MODEL
96C-MAH

BASCOM AVE & NAGLEE AVE
SAN JOSE, CALIFORNIA

SECTION VIEW
SCALE 1 1/2" = 12"

9672260
23

Copyright 1996
EDWIN BRUCE ASSOCIATES. All designs drawings, and written material appearing herein, are protected and constitute original and unpublished work of the Architect and may not be copied, revised, re-used or disclosed without the written consent of the Architect. Equipment manufactured by others is excluded. Drawings and specifications are instruments of architectural service, and shall remain the property of the Architect. Use is restricted to the site for which they were prepared.

AYR-KING CORPORATION
2013 COBALT DRIVE
LOUISVILLE, KY 40299
Ph (502) 266-6270
Fax (502) 266-6274

LICENSED ARCHITECT
EDWIN G. BRUCE
NO. C-13
REN. 5-31
STATE OF CALIFORNIA

KFC

K.F.C. JENSEN
CORNER OF BASCOM AVE. AND NAGLEE AVE.
SAN JOSE CALIFORNIA

JULY 22,1996	DATE
D.C.	DRAWN
1/4 = 1'-0"	SCALE
9405	JOB NO.

EQ-3

... OF ... 46

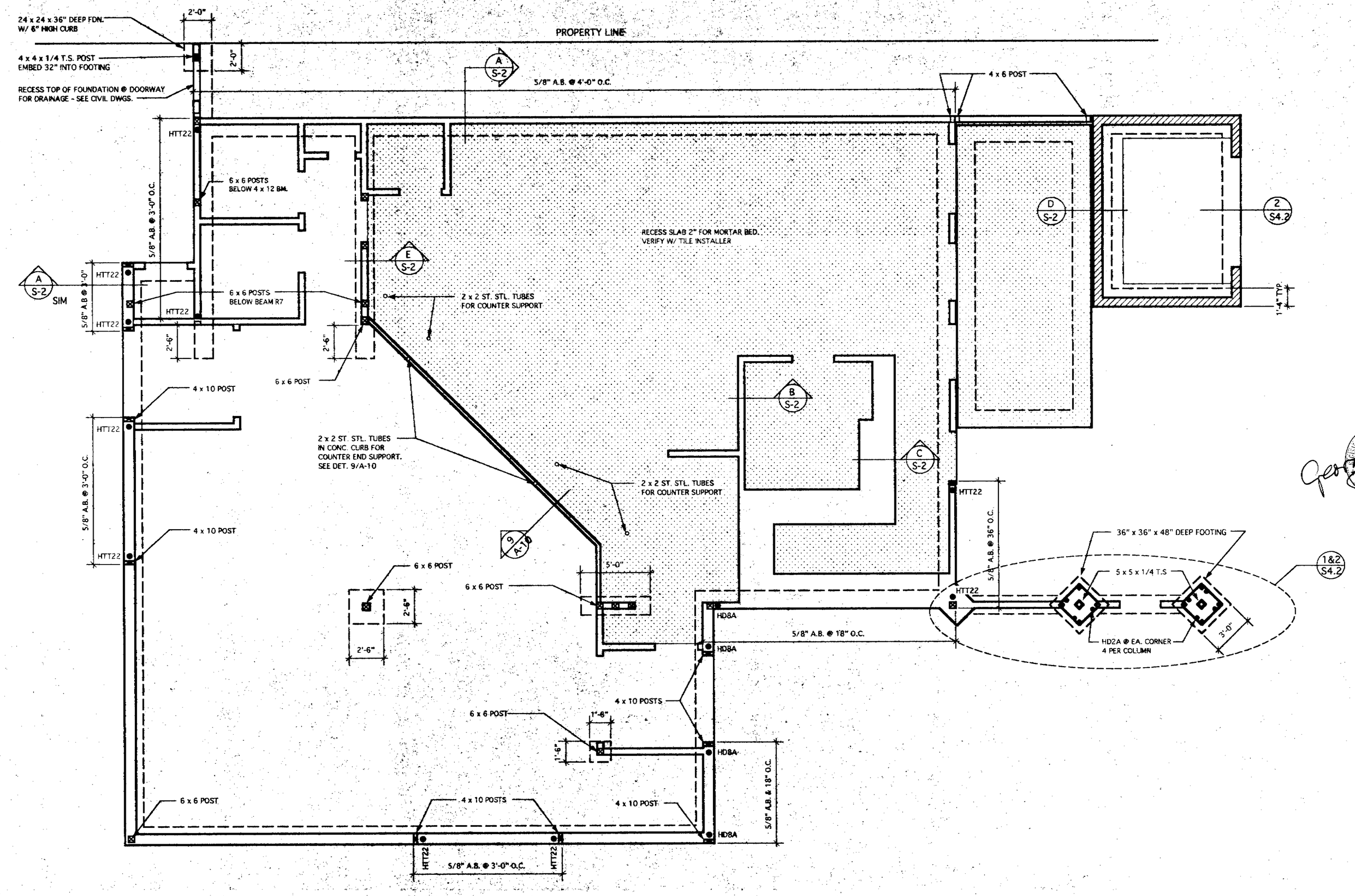

FOUNDATION PLAN

Copyright 1996
EDWIN BRUCE ASSOCIATES. All designs drawings, and written material appearing herein, are protected and constitute original and unpublished work of the Architect and may not be copied, revised, re-used or disclosed without the written consent of the Architect. Equipment manufactured by others is excluded. Drawings and specifications are instruments of architectural service, and shall remain the property of the Architect. Use is restricted to the site for which they were prepared.

EDWIN BRUCE
Associates
Architects
A.I.A.
1625 The Alameda
Suite 610
San Jose, CA.
95126
Ph. 408/995 5701
Fax 408/995 5022

KFC

K.F.C. JENSEN
CORNER OF BASCOM AVE. AND NAGLEE AVE.
SAN JOSE CALIFORNIA

PLAN CHECK APPROVAL
AUG 09 1996
KUTZMANN & ASSOCIATES

JULY 22, 1996	DATE
D.C.	DRAWN
1/4 = 1'-0"	SCALE
9405	JOB NO.

9672260
24

S-1
OF 46

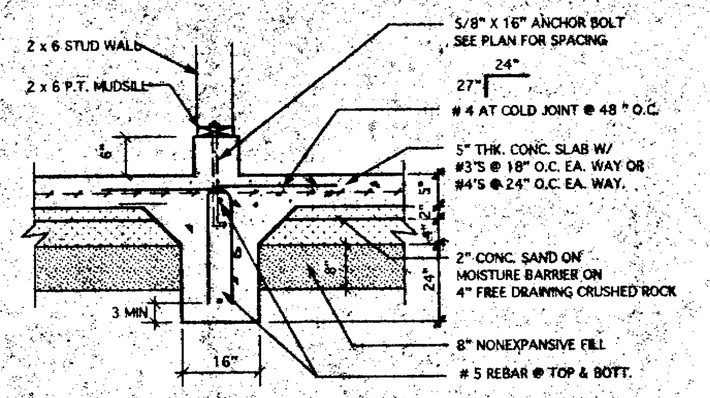

E INTERIOR BEARING FOUNDATION 3/4" = 1'-0"

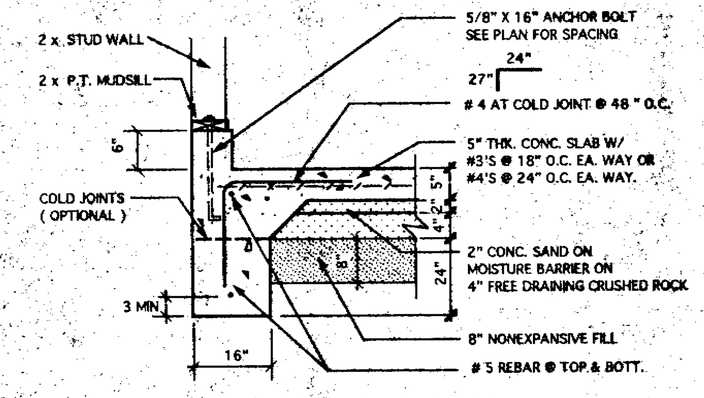

A TYPICAL PERIMETER FOUNDATION SCALE 3/4" = 1'-0"

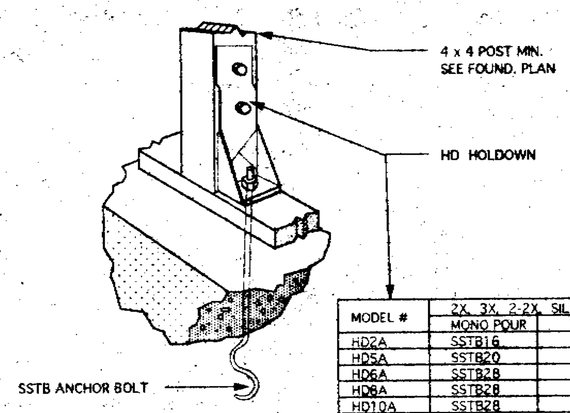

MODEL #	2X, 3X, 2-2X, SILL PLATES MONO POUR	TWO POUR	ANCHOR DIA.
HD2A	SSTB16	SSTB20	5/8"
HD5A	SSTB20	SSTB24	3/4"
HD6A	SSTB28	SSTB34	7/8"
HD8A	SSTB28	SSTB34	7/8"
HD10A	SSTB28	SSTB34	7/8"
LTT19	SSTB16	SSTB20	3/4"
LTT20	SSTB16	SSTB20	1/2"
MTT22	SSTB28	SSTB34	5/8"
HTT22	SSTB28	SSTB34	5/8"
MTT28B	SSTB24	SSTB34	3/4"

F HOLDOWN INSTALLATION DETAIL N.T.S.

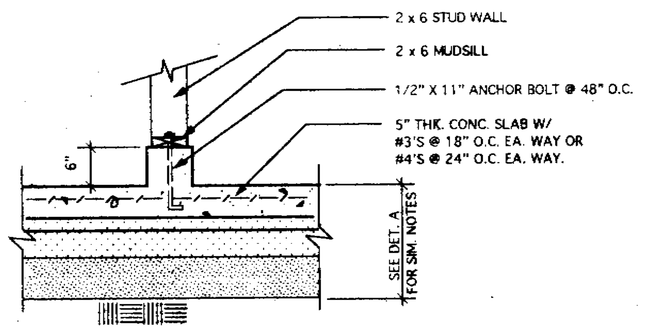

B TYP. INTERIOR CURB SCALE 3/4" = 1'-0"

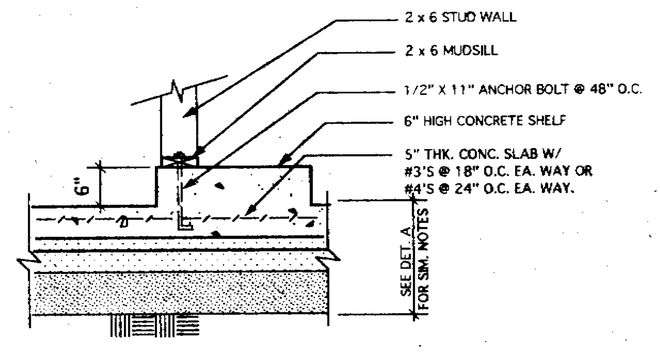

C CONCRETE SHELF SCALE 3/4" = 1'-0"

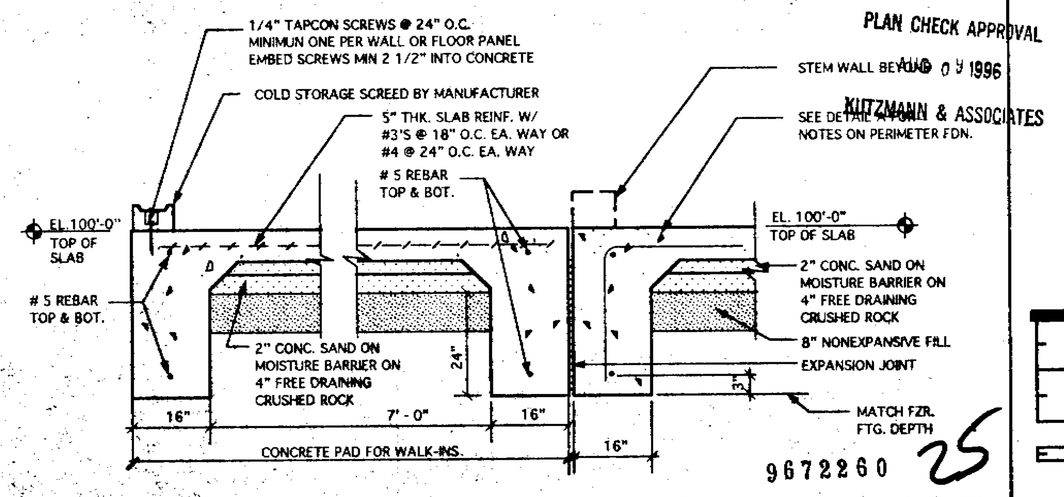

PLAN CHECK APPROVAL
AUG 0 9 1996
KUTZMANN & ASSOCIATES

9672260 25

D BUILDING TO WALK-IN FOUNDATION SCALE 3/4" = 1'-0"

Copyright 1996
EDWIN BRUCE ASSOCIATES. All designs drawings, and written material appearing herein, are protected and constitute original and unpublished work of the Architect and may not be copied, revised, re-used or disclosed without the written consent of the Architect. Equipment manufactured by others is excluded. Drawings and specifications are instruments of architectural service, and shall remain the property of the Architect. Use is restricted to the site for which they were prepared.

EDWIN BRUCE
Associates
Architects
A.I.A.
1625 The Alameda
Suite 610
San Jose, CA.
95126
Ph. 408/995 5701
Fax 408/995 5022

KFC

K.F.C. JENSEN
CORNER OF BASCOM AVE. AND NAGLEE AVE.
SAN JOSE CALIFORNIA

MAY 24, 1996	DATE
D.C.	DRAWN
1/4 = 1'-0"	SCALE
9405	JOB NO.

S-2

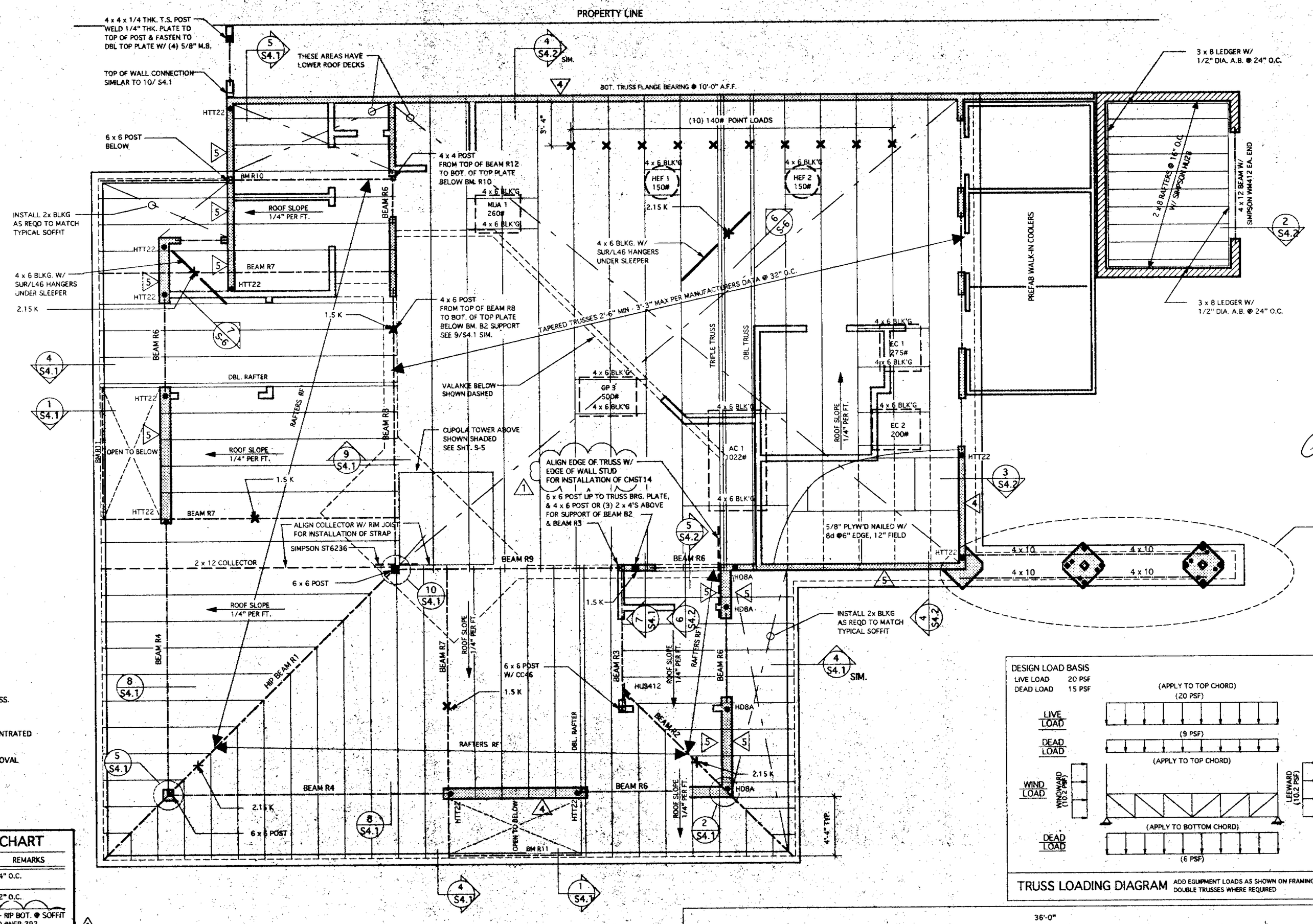

SHEAR WALL SCHEDULE

	4	5	6
MATERIAL	PLYWOOD (BLOCK ALL EDGES)**		
THICKNESS	3/8"		
SHEAR ALLOWED	260	380	490
EDGE NAILING	8d @ 6"	8d @ 4"	8d @ 3"
INT. NAILING	8d @ 12"	8d @ 12"	8d @ 12"
SILL NAILING SHEAR MAT'L 1 SIDE	16d @ 5"	16d @ 3"	16d @ 2 1/2"
SILL NAILING SHEAR MAT'L 2 SIDE	16d @ 2 1/2"	16d @ 3" 2 ROWS	16d @ 2 1/2" 2 ROWS
BLOCK NAILING OR CLIP ANGLE	16d @ 3" OR 1.90@24"	1.90 @ 1.8" OR 1.90 + L30 @ 2.4"	1.90 + L30 @ 1.6" OR 2 x 1.90 @ 2.4"

** PLYWOOD NAILING: AS SHOWN COMMON OR GALVANIZED BOX

1. SILL NAILING: 16d COMMON.
2. WHERE TWO ROWS OF NAILS ARE REQUIRED, THEY MUST BE STAGGERED.
3. FOR ANCHOR BOLT SIZE AND SPACING, SEE FOUNDATION PLAN.
4. WHERE PLYWOOD IS APPLIED ON BOTH FACES OF WALL AND NAIL SPACING IS LESS THAN 6", PANEL JOINTS SHALL BE OFFSET TO FALL ON DIFFERENT FRAMING MEMBERS OR FRAMING SHALL BE 3 X.

FRAMING GENERAL NOTES

1. CEILING HUNG SHELVING SHOWN ON SHEET EQ1 REQUIRES SUPPORT AT TRUSS. SEE CEILING HUNG SHELF DETAIL ON WALL SECTION SHEET.
2. TRUSS MANUFACTURER: PLEASE DOUBLE THE TRUSSES WHERE REQUIRED FOR EQUIPMENT LOADS. PLEASE ALLOW 8" IN ANY DIRECTION FOR CONCENTRATED LOADS SUPPORT
3. TRUSS MANUFACTURER: PROVIDE TRUSS SHOP DRAWINGS FOR CITY APPROVAL
4. SEE FOUNDATION PLAN FOR HOLDOWN LOCATIONS
5. IT IS REQUIRED THAT THE TRUSS DEPTH BE A MAXIMUM OF 39".
6. ALL HEADERS AT EXTERIOR WALLS ARE TO BE 6 x 8 U.N.O.

STRUCTURAL MEMBERS & CONNECTION CHART

IDENT	DESCRIPTION	SIZE	MATERIAL	CONNECTIONS	SUPPORTS	REMARKS
RF1	RAFTER	2 x 12	DF #1		BRG. WALLS BEAMS, HIP	@ 24" O.C.
	ROOF TRUSS	PER MFTR. DATA			BRG. WALLS BEAMS	@ 32" O.C.
R1	BEAM	5 1/4 x 14	PARALLAM		6 x 6 POSTS	HIP - RIP BOT. @ SOFFIT ICBO #NER-292
R2	BEAM	3 1/2 x 12	PARALLAM		R3, 4 x 6 POST	HIP - RIP BOT. @ SOFFIT ICBO #NER-292
R3	BEAM	4 x 12	DF #1		4 x 6 POSTS	FLUSH
R4	BEAM	5 1/8 x 15	GLULAM 24F		6 x 6 POST, 6 x 6 POST	BELOW TOP PLATES
R5	BEAM	4 x 12	DF #1		4 x 6 POSTS	HEADER
R6	BEAM	4 x 12	DF #1		4 x 6 POSTS	HEADER
R7	BEAM	6 x 12	DF #1		4 x 6 POSTS	FLUSH W/ RAFTER
R8	BEAM	5 1/8 x 15	GLULAM 24F		6 x 6 POSTS	BELOW TOP PLATES DET. 9/S4.1
R9	BEAM	5 1/8 x 16 1/2	GLULAM 24F		6 x 6 POSTS	BELOW TOP PLATES DET. 3/S4.1
R10	BEAM	4 x 12	DF#1		4 x 6 POSTS	
R11	BEAM	4 x 12	DF#1		U412	

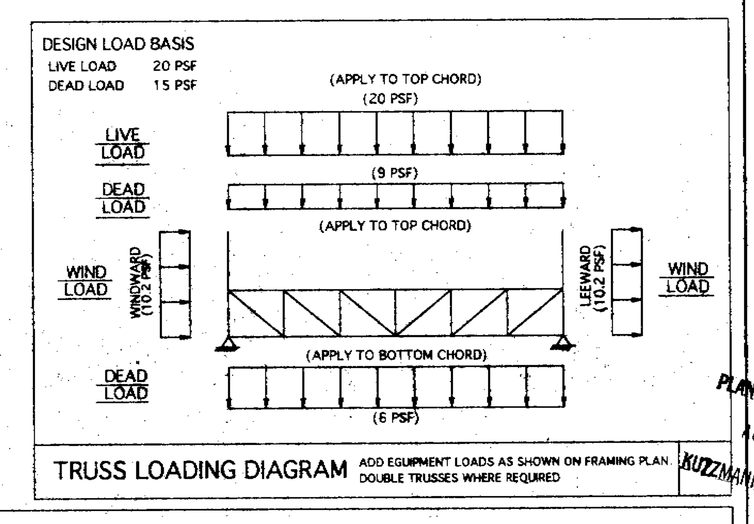

TRUSS LOADING DIAGRAM — ADD EQUIPMENT LOADS AS SHOWN ON FRAMING PLAN. DOUBLE TRUSSES WHERE REQUIRED

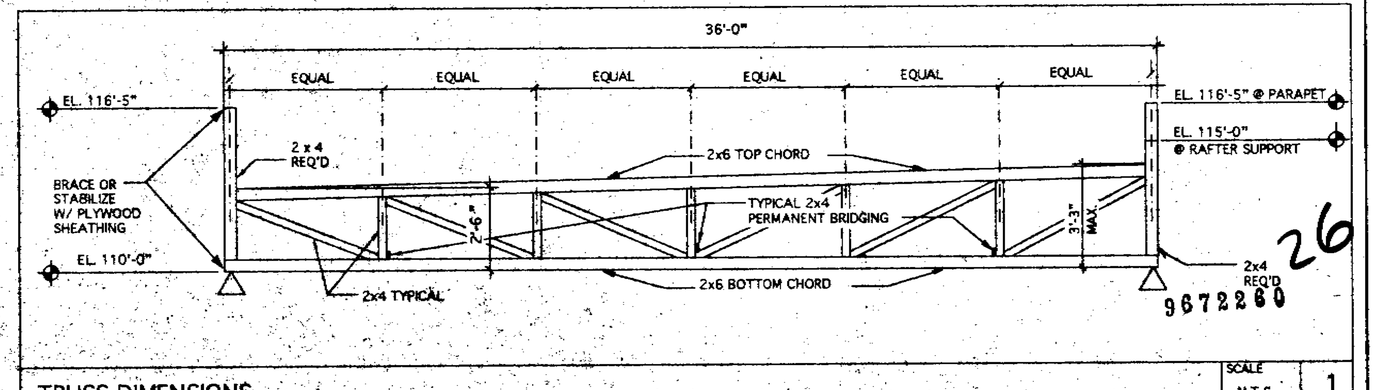

TRUSS DIMENSIONS — SCALE N.T.S. — 1

Copyright 1996
EDWIN BRUCE ASSOCIATES. All designs drawings, and written material appearing herein, are protected and constitute original and unpublished work of the Architect and may not be copied, revised, re-used or disclosed without the written consent of the Architect. Equipment manufactured by others is excluded. Drawings and specifications are instruments of architectural service, and shall remain the property of the Architect. Use is restricted to the site for which they were prepared.

BLD. DEPT. 7/30/96 — 1

ALL STRUCTURAL
CONSULTING ENGINEERS
14499 BERCAW LN. SAN JOSE, CA. 95124 (408) 267-9725

KFC

K.F.C. JENSEN
CORNER OF BASCOM AVE. AND NAGLEE AVE.
SAN JOSE CALIFORNIA

PLAN CHECK APPROVAL AUG 09 1996 KUZZMANN & ASSOCIATES

JUNE 12, 1996	DATE
D.C.	DRAWN
1/4 = 1'-0"	SCALE
9405	JOB NO.

S-3

26 OF

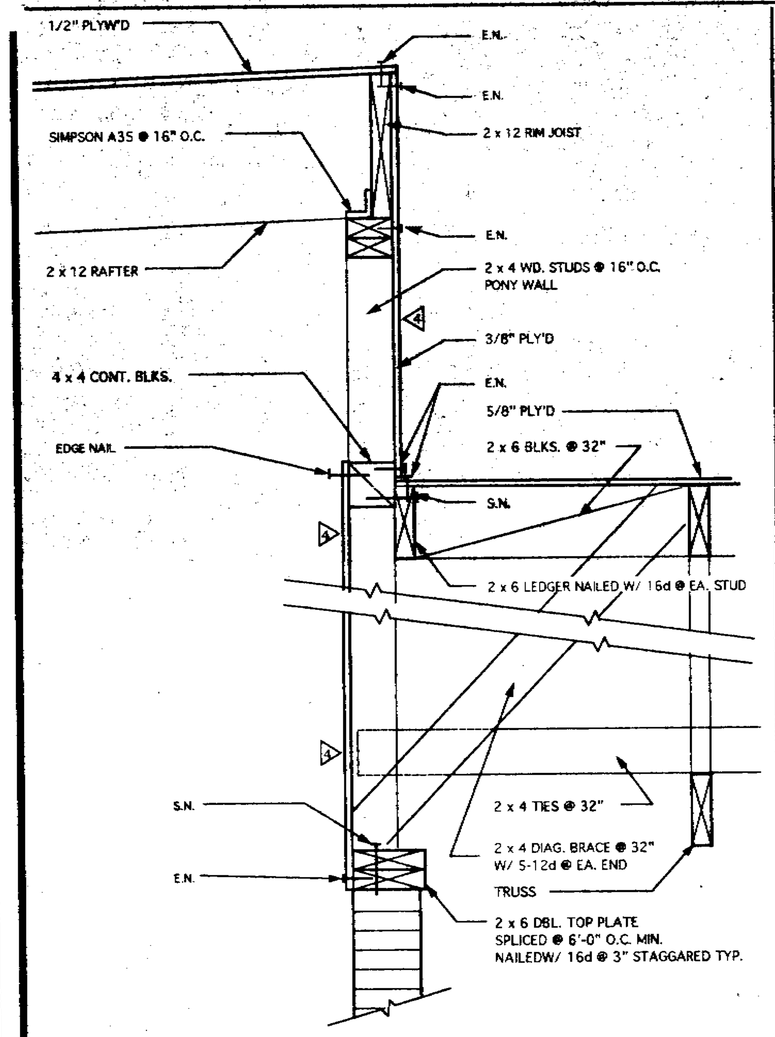

9 DETAIL SCALE 1 1/2" = 1'-0"

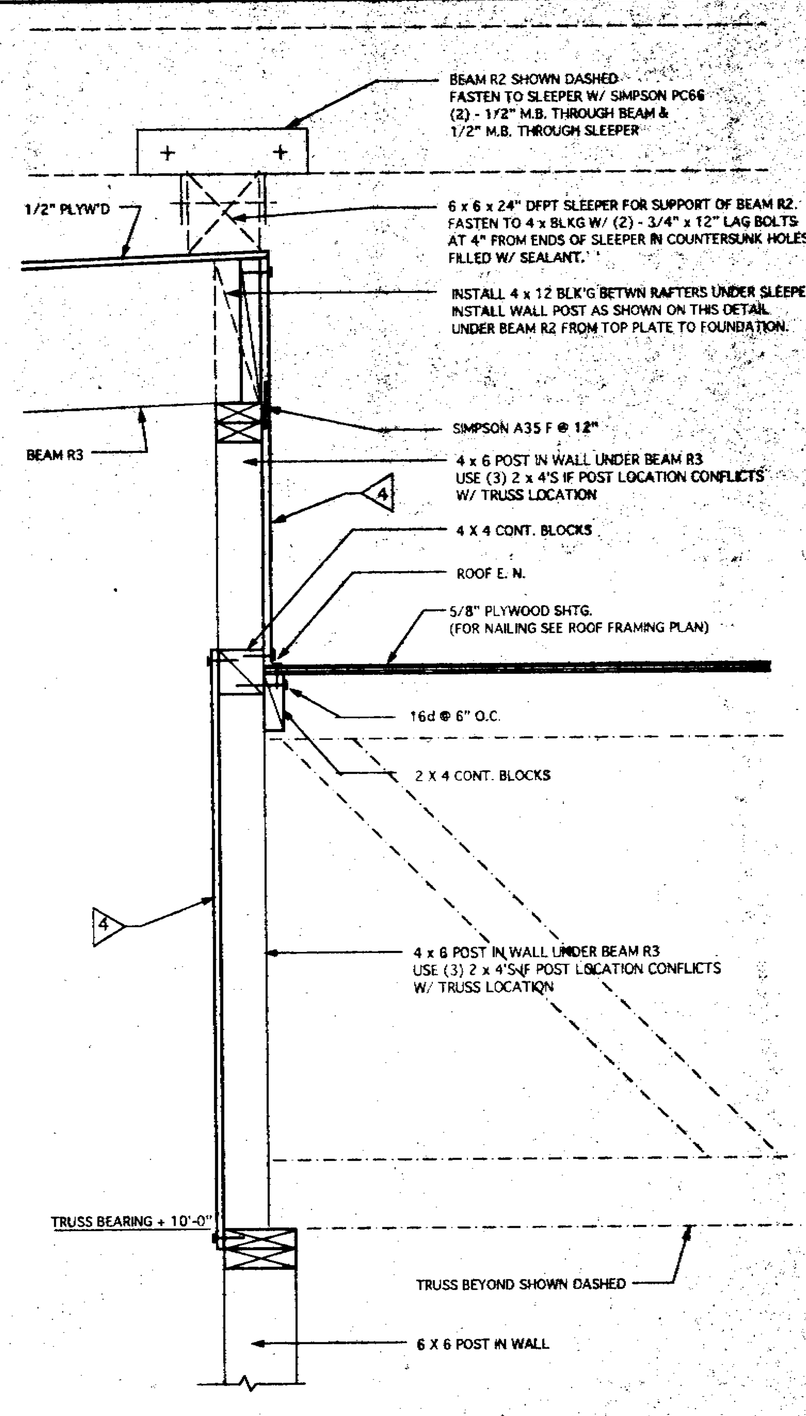

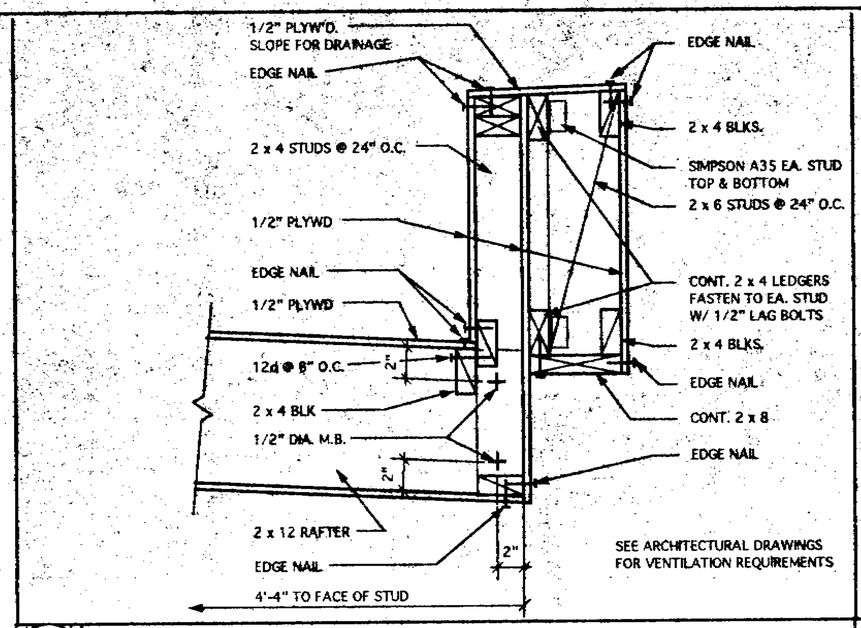

4 DETAIL SCALE 1 1/2" = 1'-0"

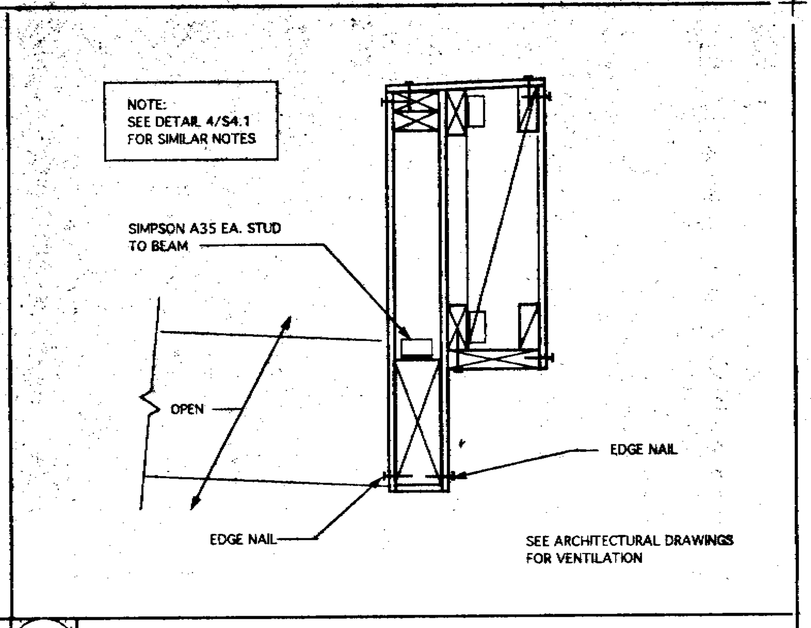

1 DETAIL SCALE 1 1/2" = 1'-0"

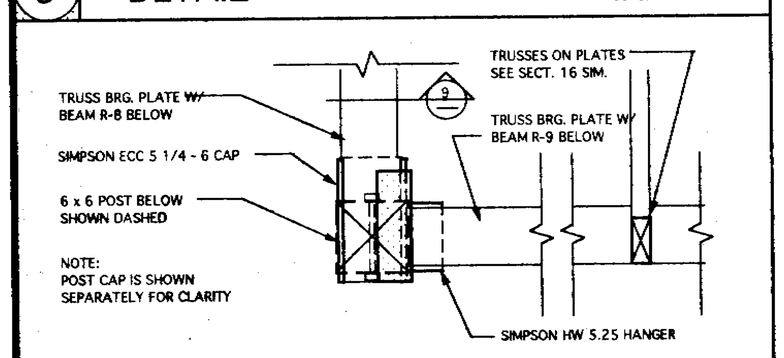

POST CAP DETAIL

10 DETAIL SCALE 1 1/2" = 1'-0"

7 DETAIL SCALE 1 1/2" = 1'-0"

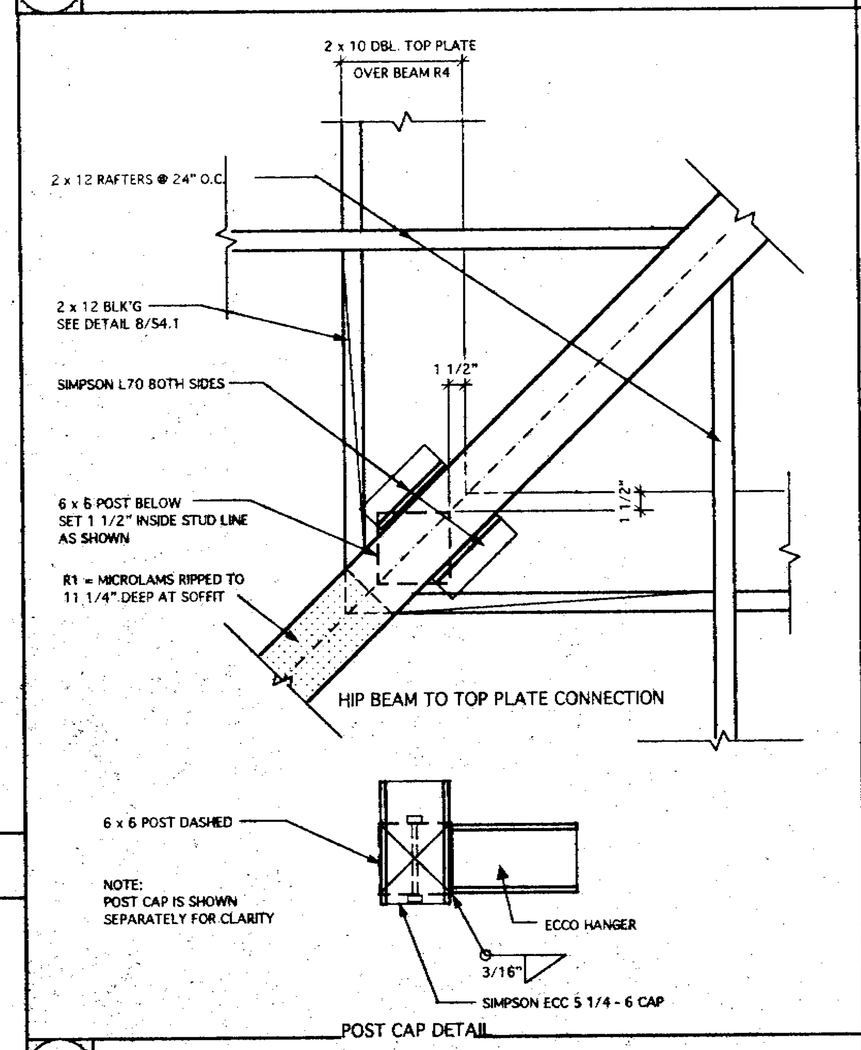

5 DETAIL SCALE 1 1/2" = 1'-0"

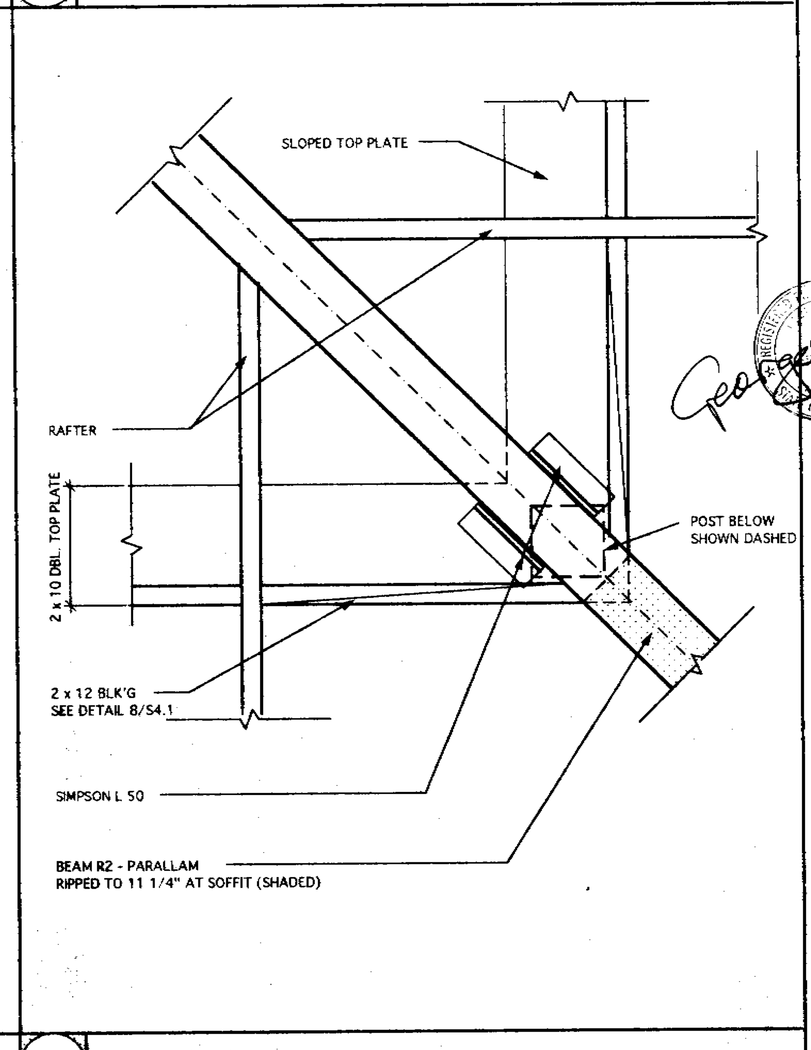

2 DETAIL SCALE 1 1/2" = 1'-0"

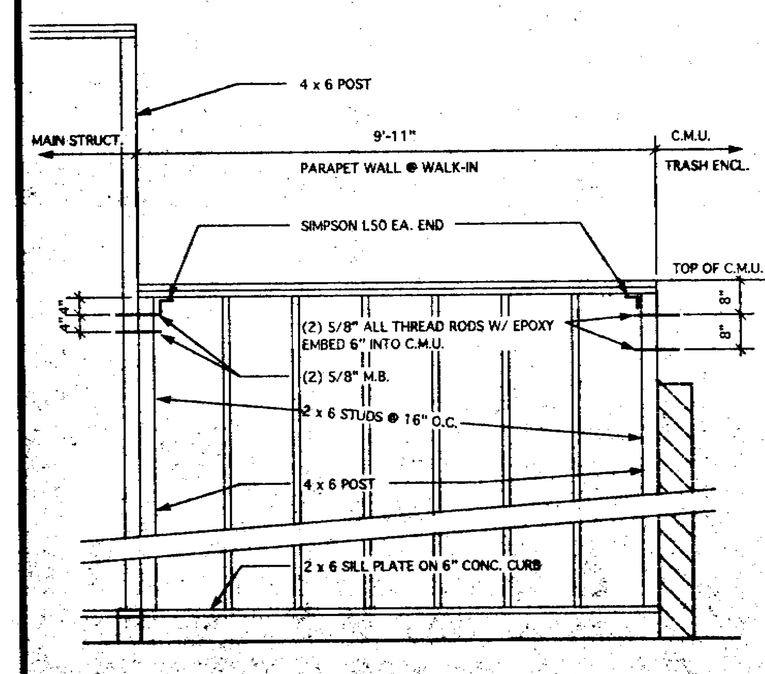

10 WALL FRAMING @ WALK-IN SCALE 1/2" = 1'-0"

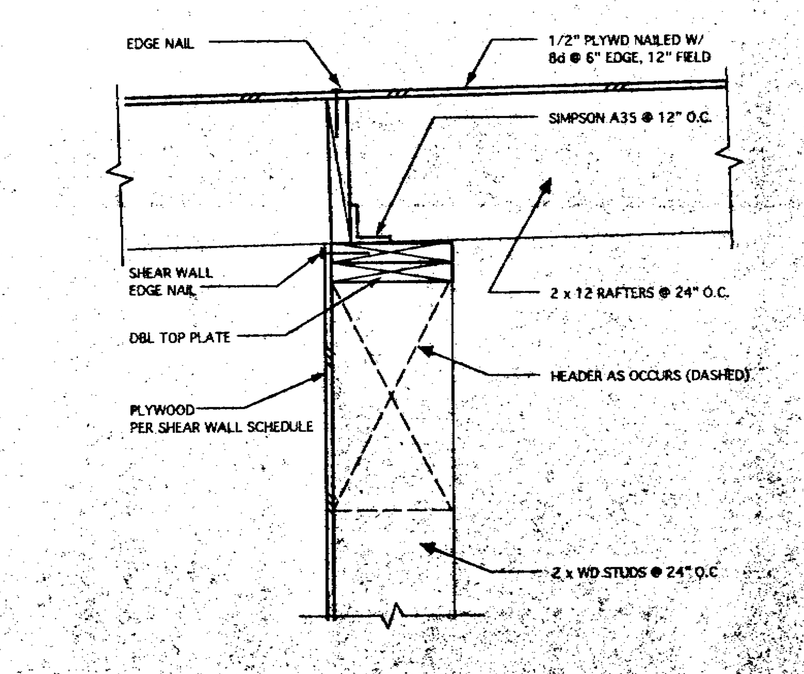

8 DETAIL SCALE 1 1/2" = 1'-0"

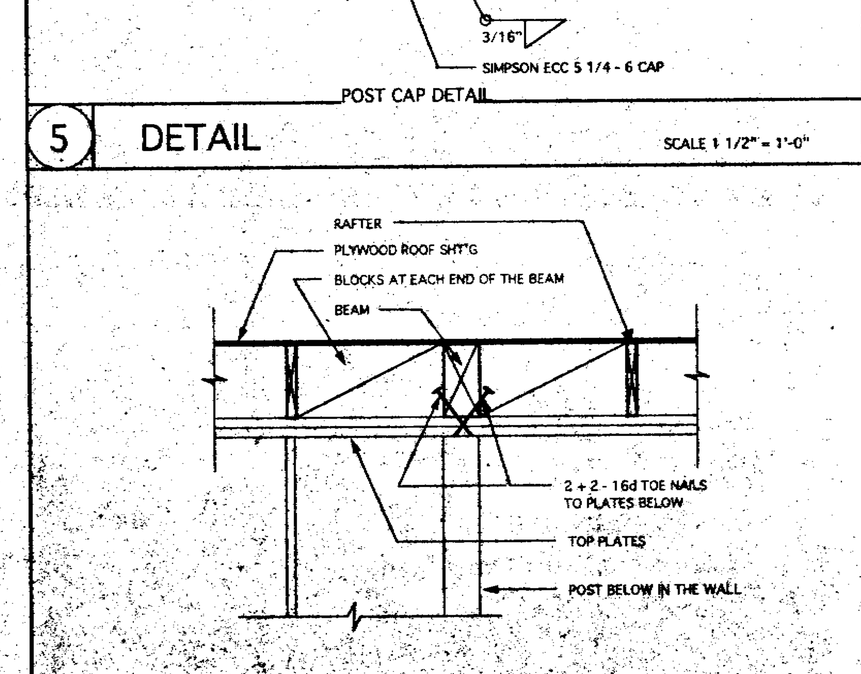

6 DETAIL SCALE 3/4" = 1'-0"

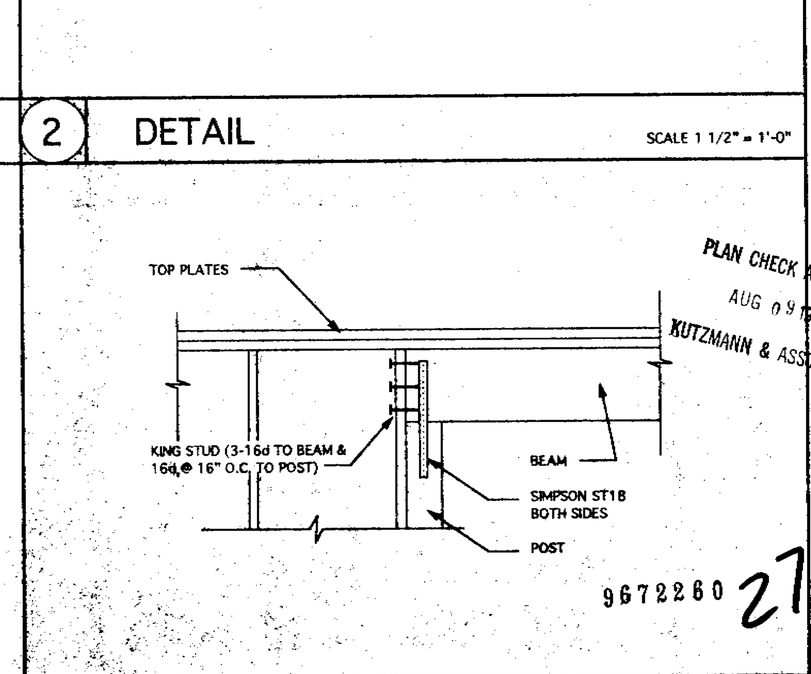

3 DETAIL SCALE 3/4" = 1'-0"

Copyright 1996
EDWIN SRUCE ASSOCIATES. All designs drawings, and written material appearing herein, are protected and constitute original and unpublished work of the Architect and may not be copied, revised, re-used or disclosed without the written consent of the Architect. Equipment manufactured by others is excluded. Drawings and specifications are instruments of architectural service, and shall remain the property of the Architect. Use is restricted to the site for which they were prepared.

ALL STRUCTURAL
CONSULTING ENGINEERS
14499 BERCAW LN. SAN JOSE, CA. 95124 (408) 267-9725

KFC

K.F.C. JENSEN
CORNER OF BASCOM AVE. AND NAGLEE AVE.
SAN JOSE CALIFORNIA

PLAN CHECK APPROVAL
AUG 09 1996
KUTZMANN & ASSOCIATES

JULY 22, 1996	DATE
D.C.	DRAWN
1/4 = 1'-0"	SCALE
9405	JOB NO.

9672260 27

S-4.1

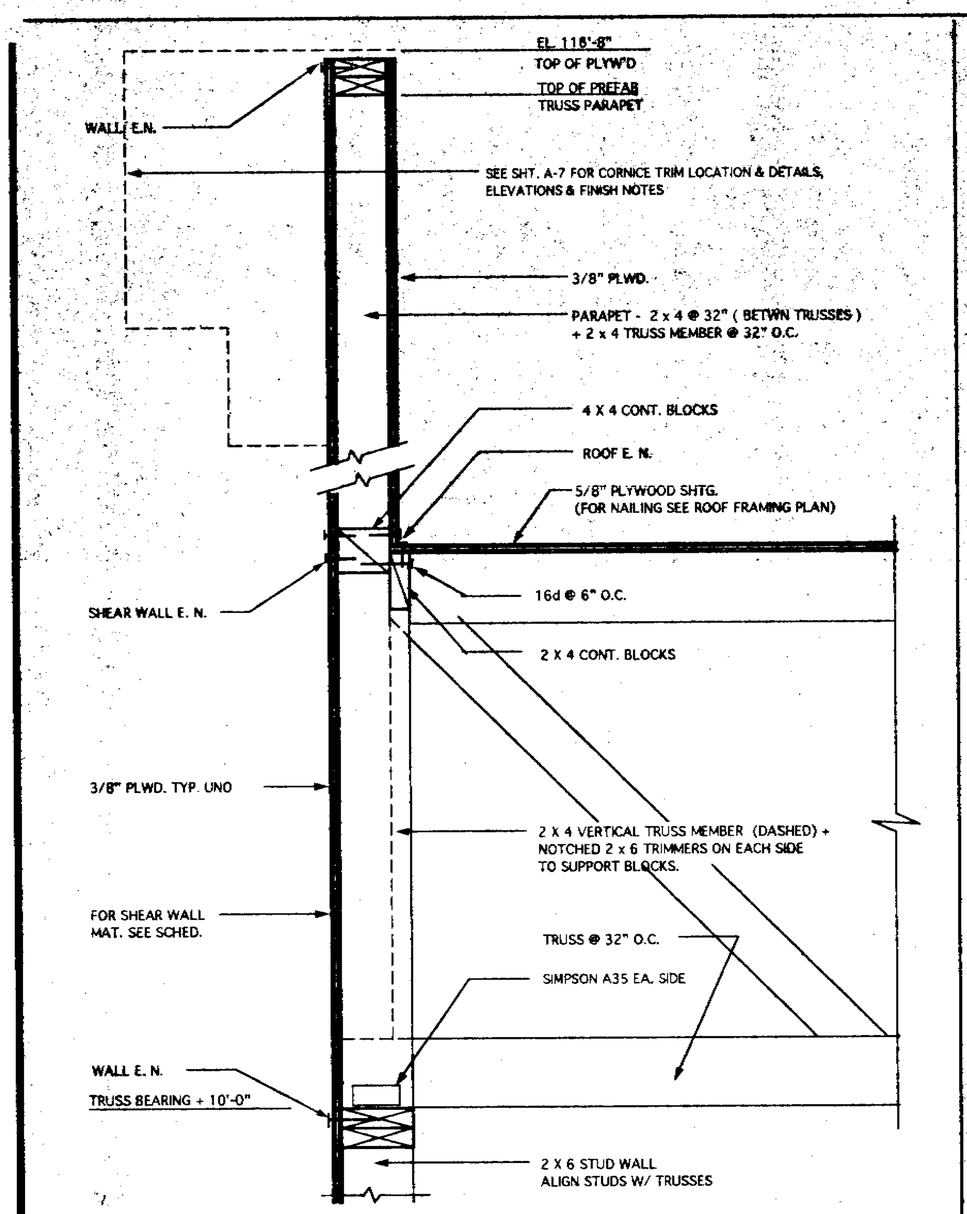

4 DETAIL SCALE 1 1/2" = 1'-0"

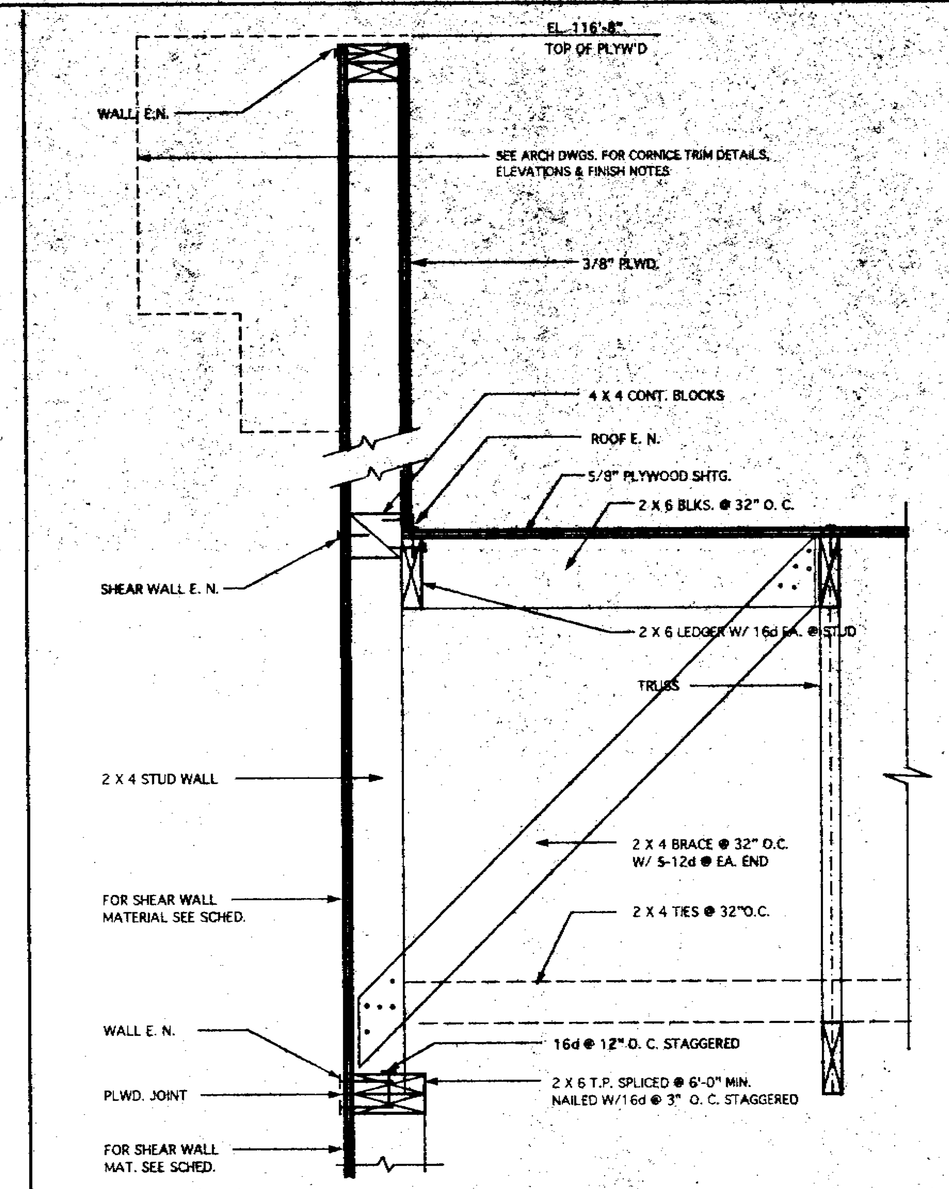

3 DETAIL SCALE 1 1/2" = 1'-0"

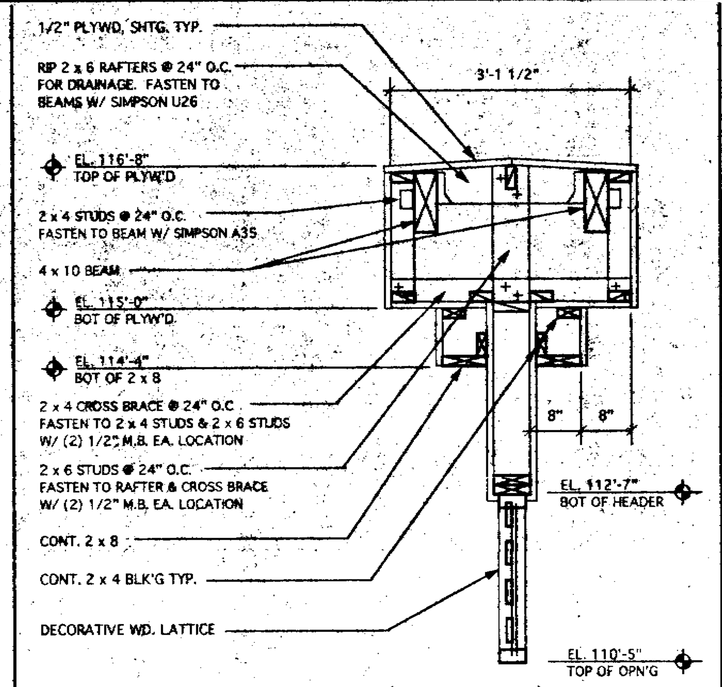

1A SECT. @ LATTICE OPENING SCALE 3/4" = 1'-0"

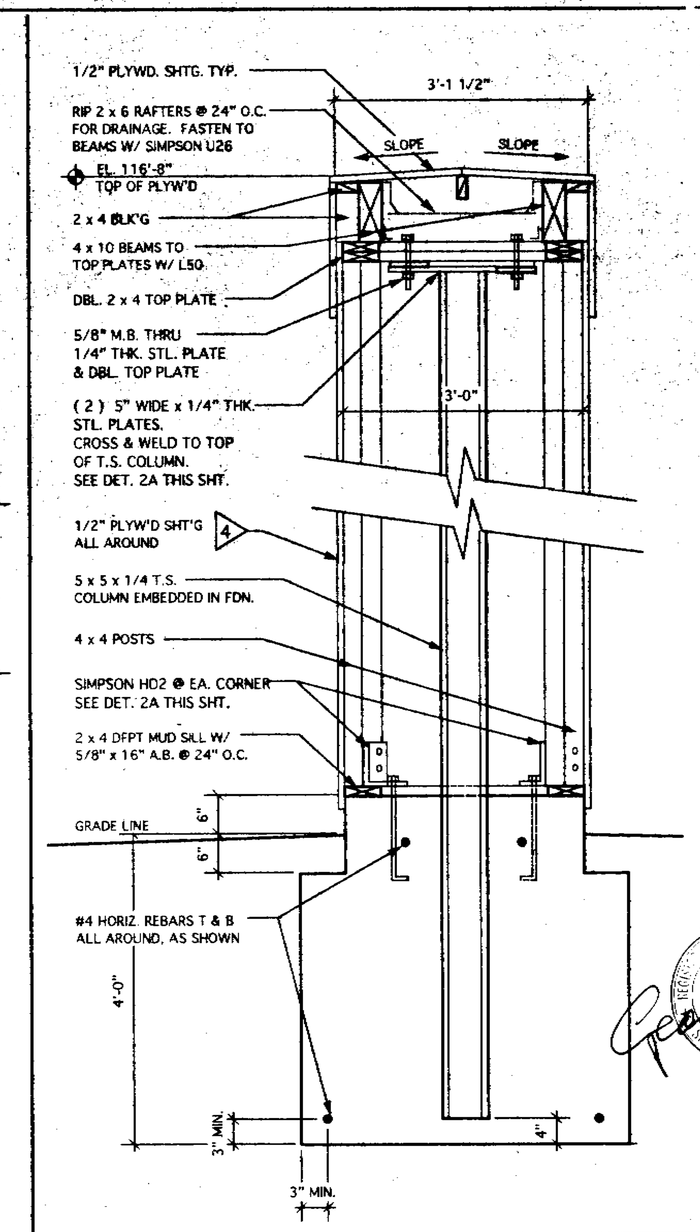

1B SECT. THRU COLUMN SCALE 3/4" = 1'-0"

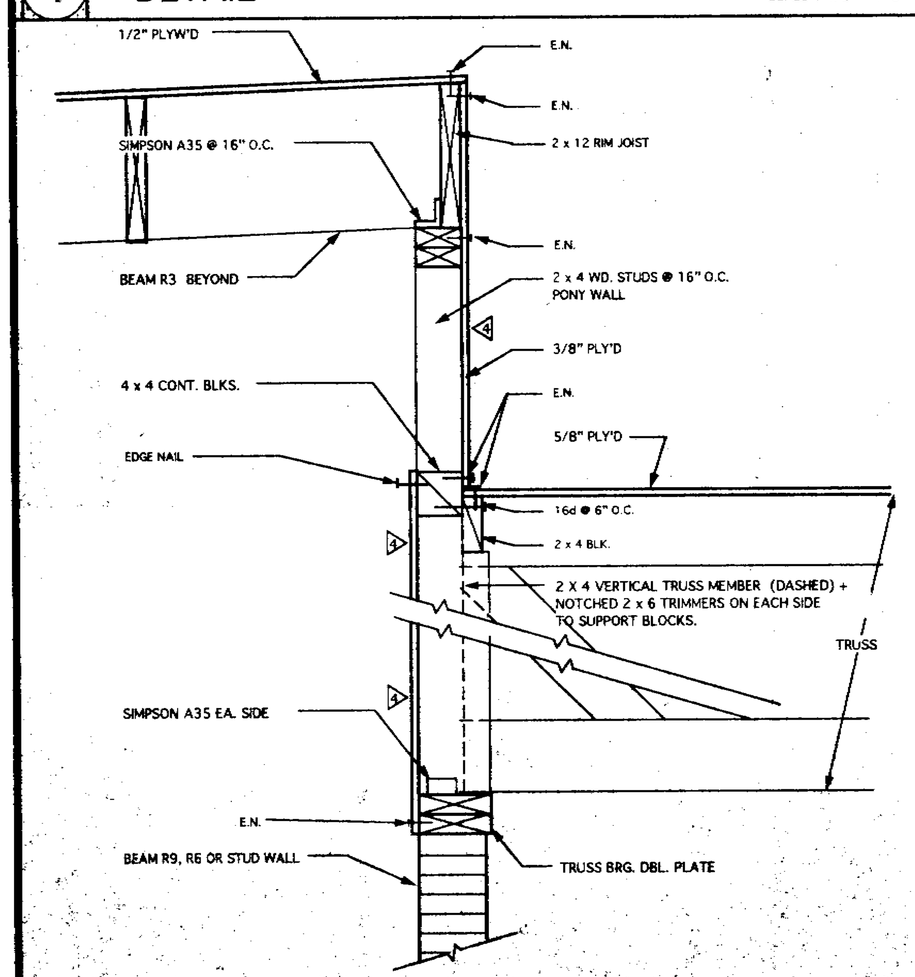

6 DETAIL

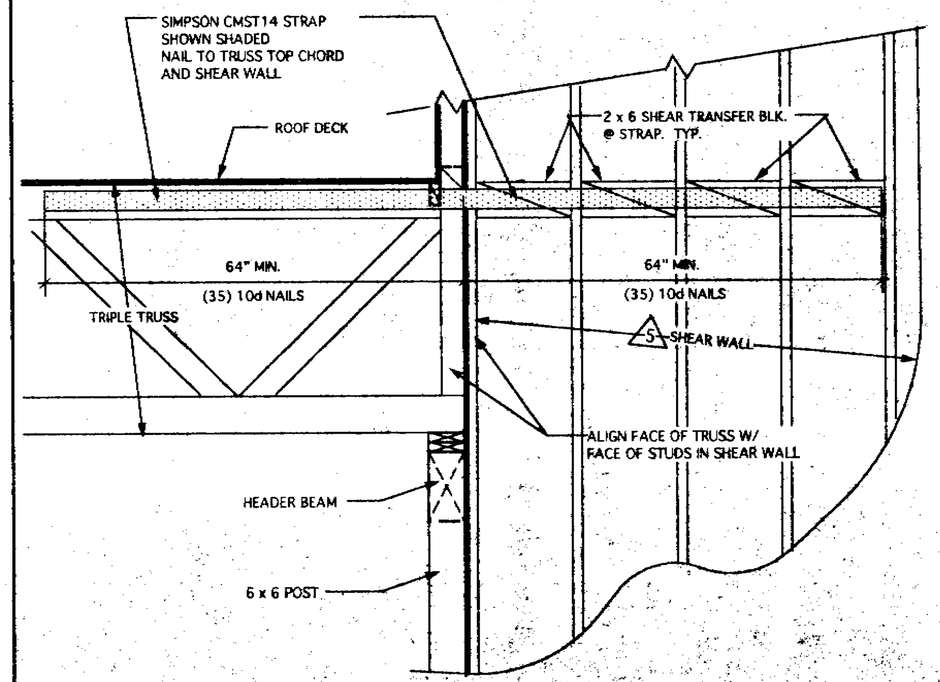

5 SHEAR TRANSFER STRAPPING SCALE 3/4" = 1'-0"

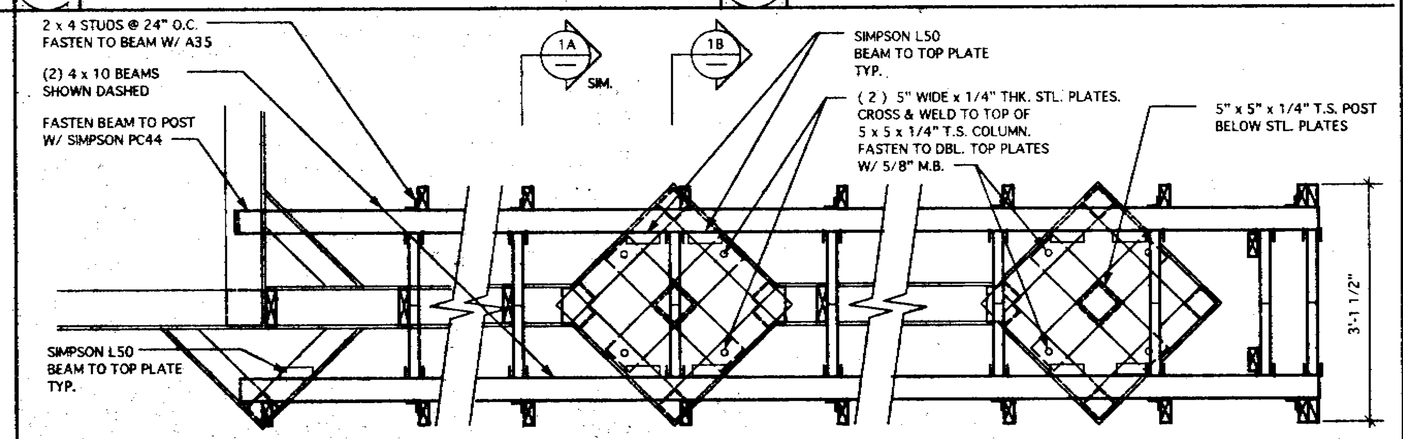

2A FREESTANDING SCREEN WALL - TOP VIEW SCALE 3/4" = 1'-0"

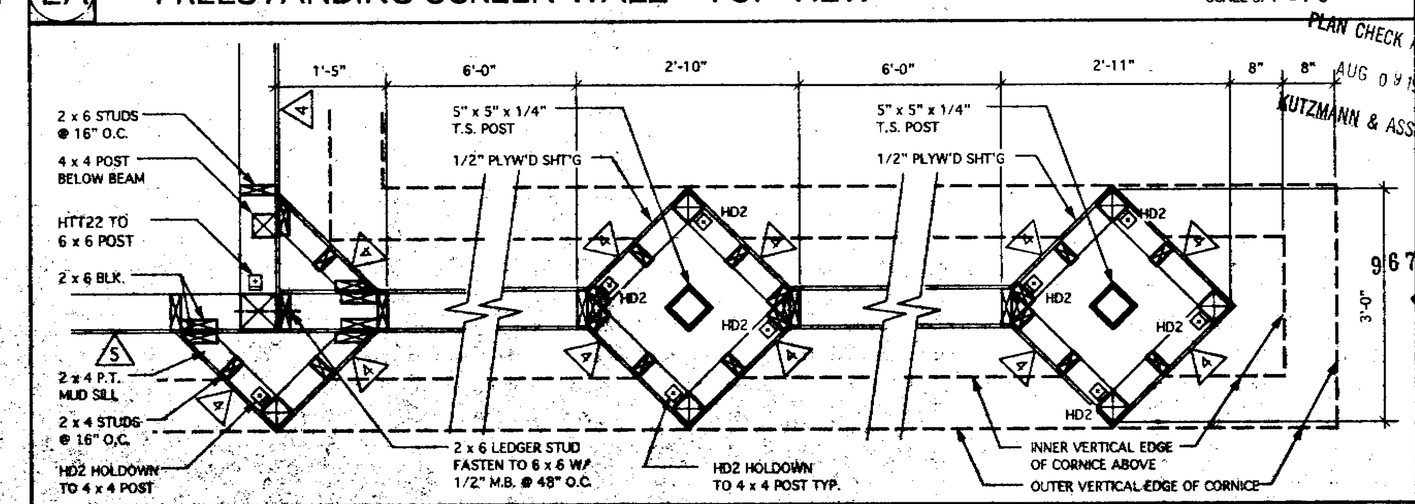

2B FREESTANDING SCREEN WALL - PLAN VIEW @ SILL SCALE 3/4" = 1'-0"

Copyright 1996
EDWIN BRUCE ASSOCIATES. All designs drawings, and written material appearing herein, are protected and constitute original and unpublished work of the Architect and may not be copied, revised, re-used or disclosed without the written consent of the Architect. Equipment manufactured by others is excluded. Drawings and specifications are instruments of architectural service, and shall remain the property of the Architect. Use is restricted to the site for which they were prepared.

ALL STRUCTURAL
CONSULTING ENGINEERS
14499 BERCAW LN. SAN JOSE, CA. 95124 (408) 267-9725

KFC

K.F.C. JENSEN
CORNER OF BASCOM AVE. AND NAGLEE AVE.
SAN JOSE
CALIFORNIA

PLAN CHECK APPROVAL
AUG 09 1996
KUTZMANN & ASSOCIATES

JULY 22, 1996	DATE
D.C.	DRAWN
1/4 = 1'-0"	SCALE
9405	JOB NO.

9672260

S-4.2

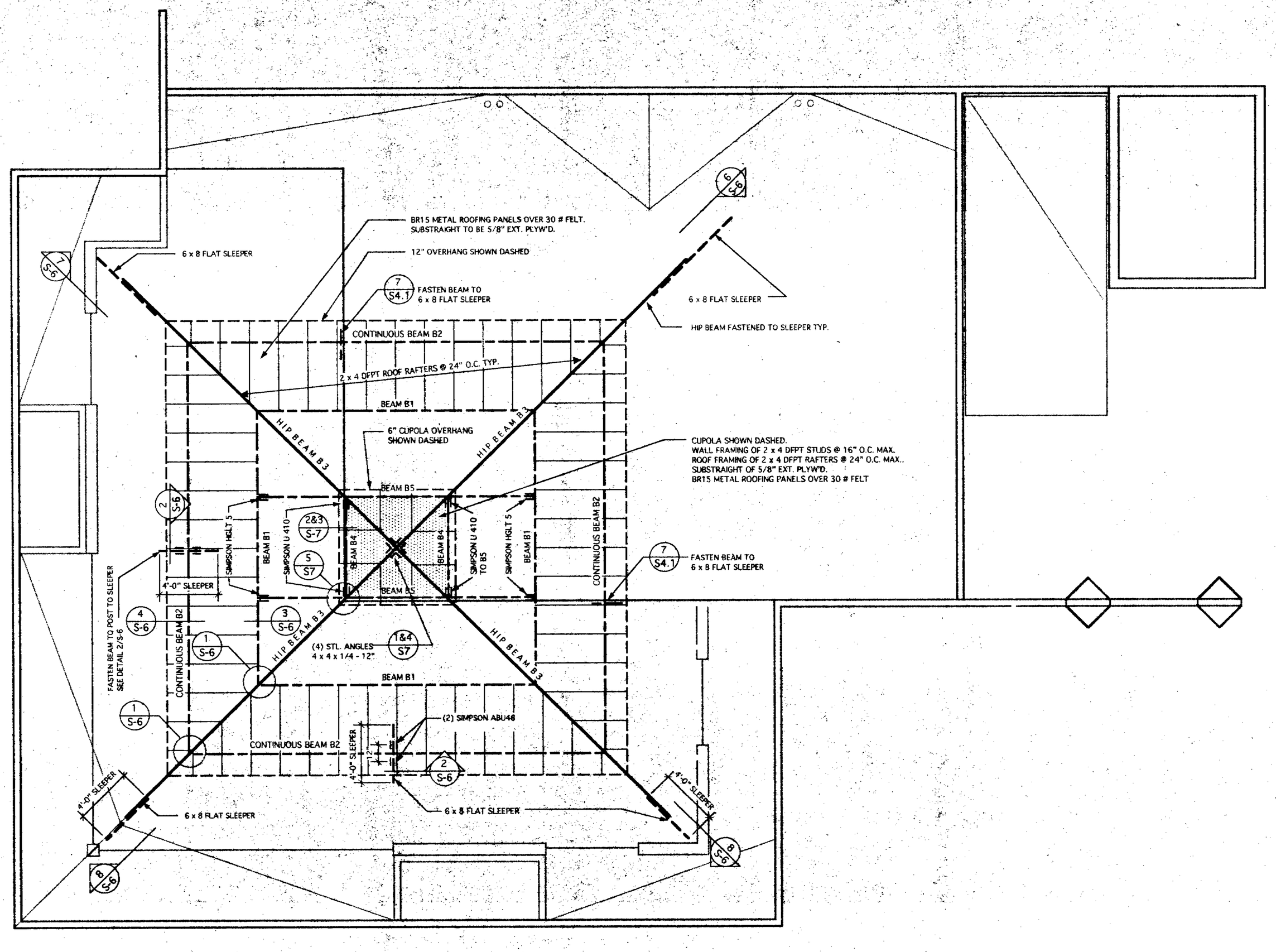

STRUCTURAL MEMBERS & CONNECTION CHART

IDENT	DESCRIPTION	SIZE	MATERIAL	CONNECTIONS	SUPPORTS	REMARKS
B1	BEAM	5 1/8 x 13 1/2	GLULAM 24F	DET.	B3, B3	STANDARD CAMBER
B2	BEAM	5 1/8 x 13 1/2	GLULAM 24F	DET.	B3, B3	STANDARD CAMBER (CONTINUOUS BEAM)
B3	HIP BEAM	6 3/4 x 15	GLULAM 24F	DET.		STANDARD CAMBER
B4	BEAM	4 x 10	DF #1	DET.	B5. B5	
B5	BEAM	5 1/8 x 13 1/2	GLULAM 24F	DET.	B1, B1	STANDARD CAMBER

DECORATIVE ROOF FRAMING PLAN

PLAN CHECK APPROVAL
AUG 09 1996
KUTZMANN & ASSOCIATES

29
9672260

Copyright 1996
EDWIN BRUCE ASSOCIATES. All designs drawings, and written material appearing herein, are protected and constitute original and unpublished work of the Architect and may not be copied, revised, re-used or disclosed without the written consent of the Architect. Equipment manufactured by others is excluded. Drawings and specifications are instruments of architectural service, and shall remain the property of the Architect. Use is restricted to the site for which they were prepared.

ALL STRUCTURAL
CONSULTING ENGINEERS
14499 BERCAW LN. SAN JOSE, CA. 95124 (408) 267-9725

KFC

K.F.C. JENSEN
CORNER OF BASCOM AVE. AND NAGLEE AVE.
SAN JOSE CALIFORNIA

JULY 22, 1996	DATE
D.C.	DRAWN
1/4 = 1'-0"	SCALE
9405	JOB NO.

S-5
OF 46

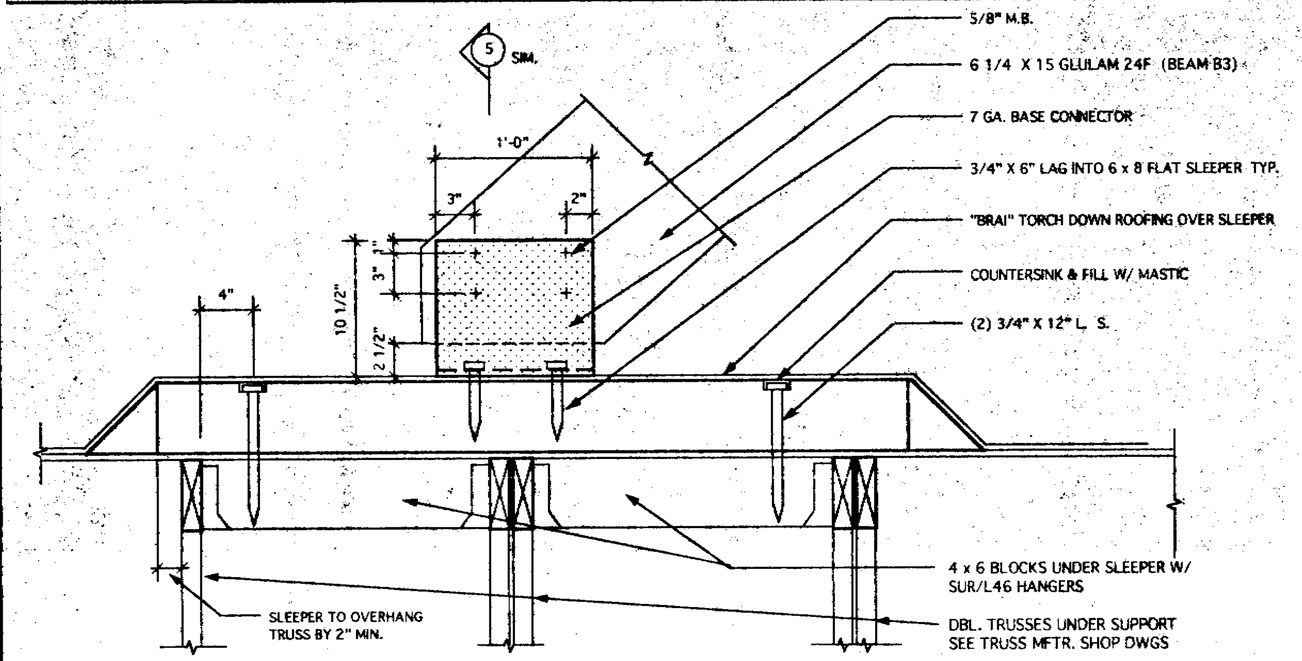

6 DETAIL SCALE 1 1/2" = 1'-0"

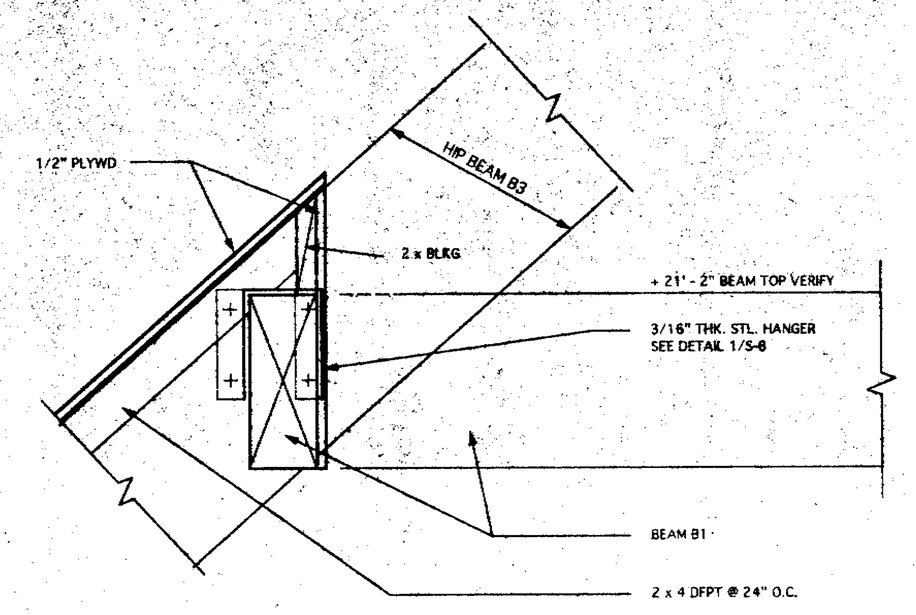

3 DETAIL SCALE 1 1/2" = 1'-0"

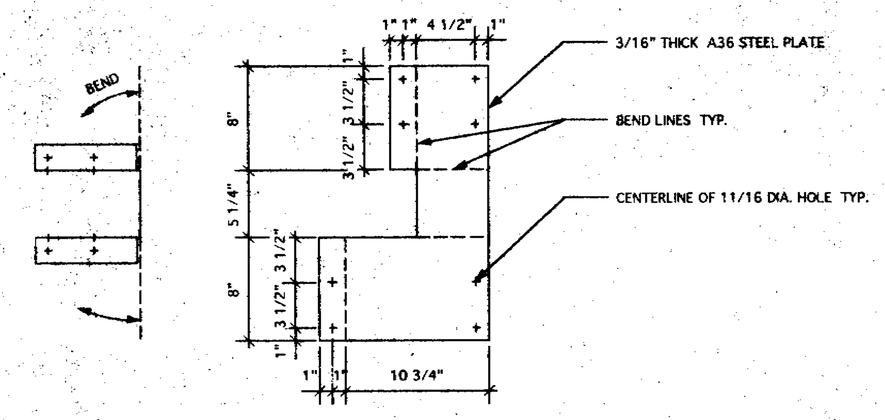

HANGER DETAIL

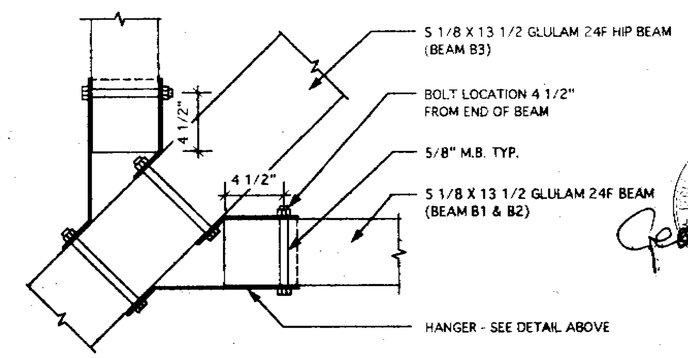

1 DETAIL SCALE 1 1/2" = 1'-0"

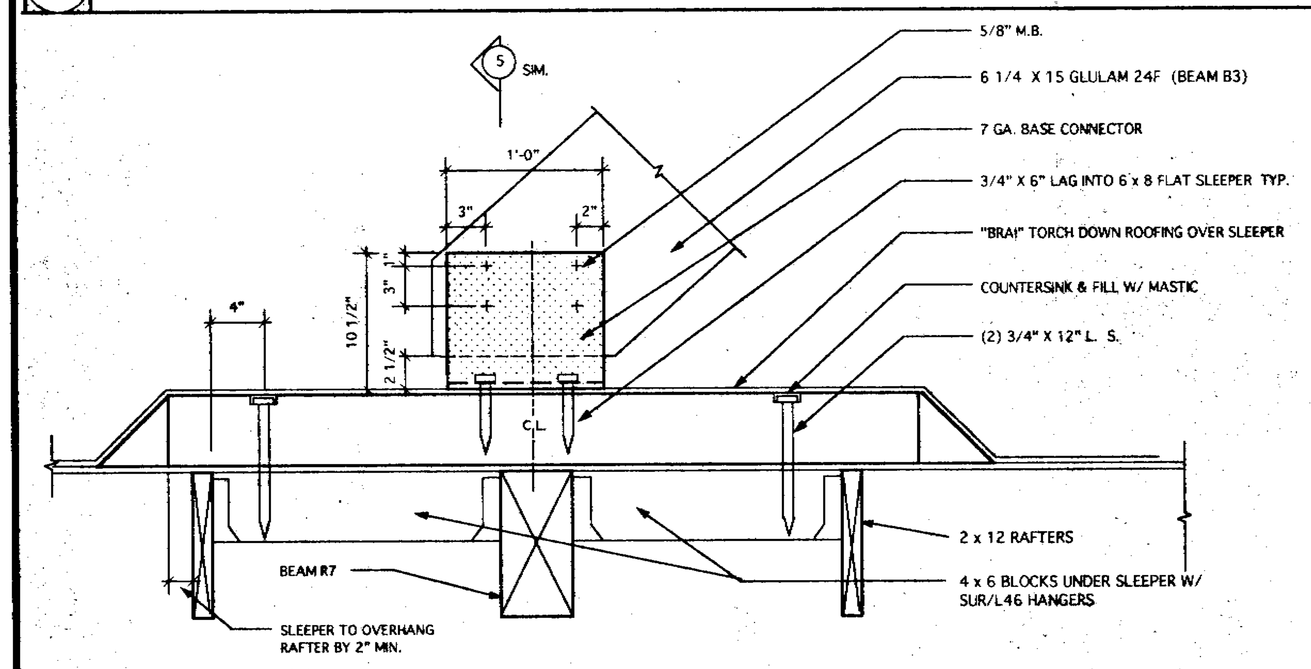

7 DETAIL SCALE 1 1/2" = 1'-0"

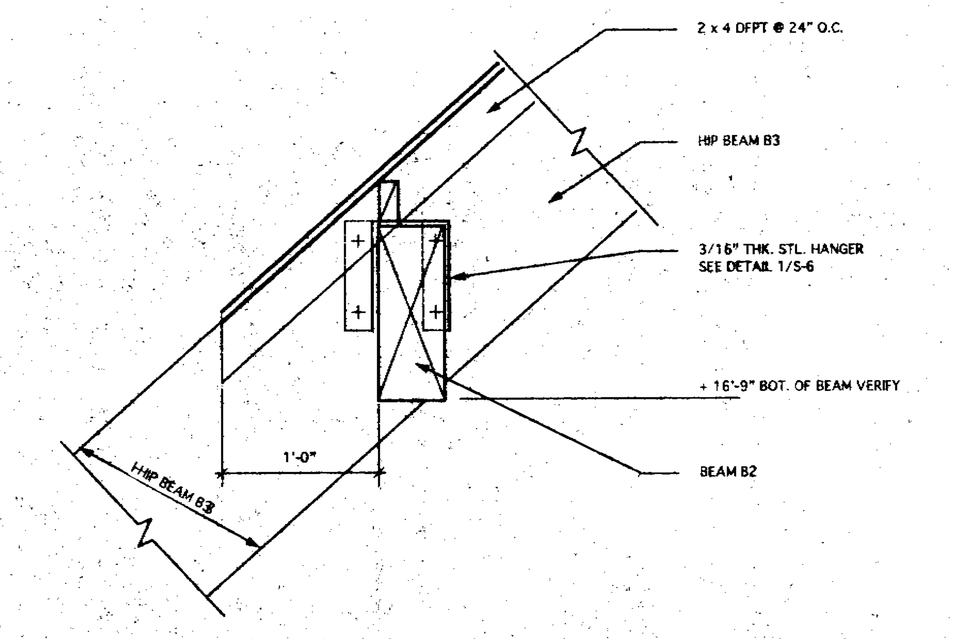

4 DETAIL SCALE 1 1/2" = 1'-0"

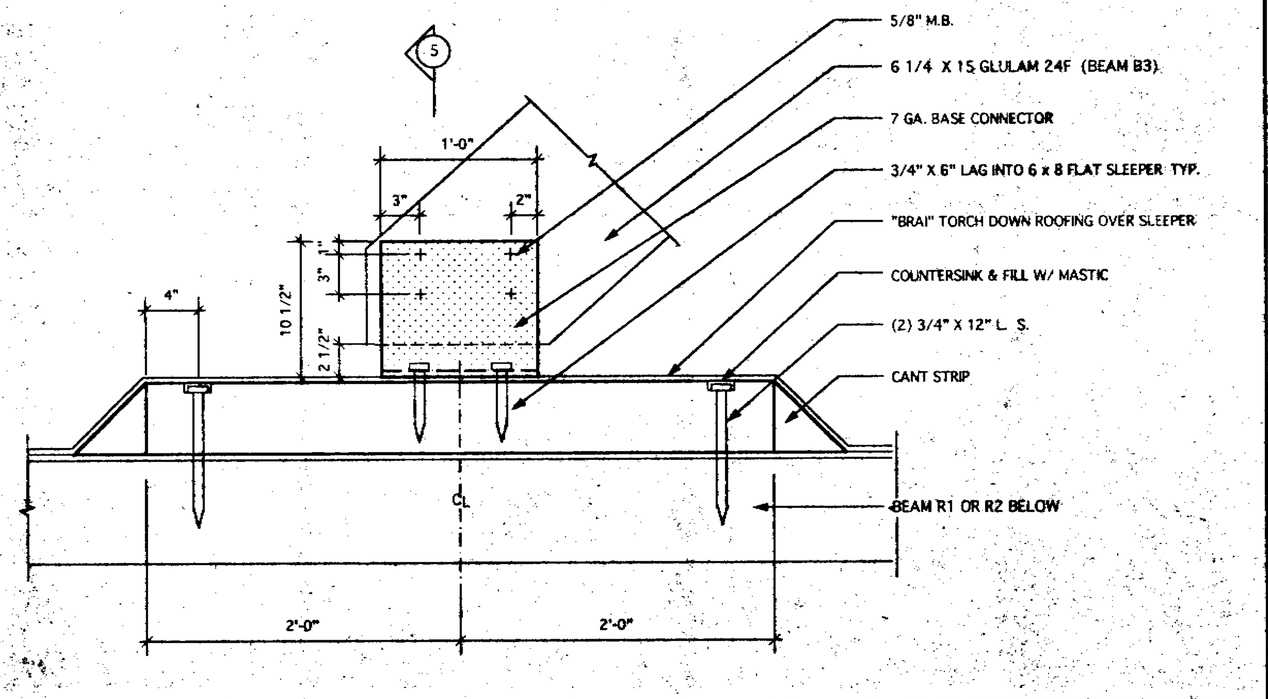

8 DETAIL SCALE 3/4" = 1'-0"

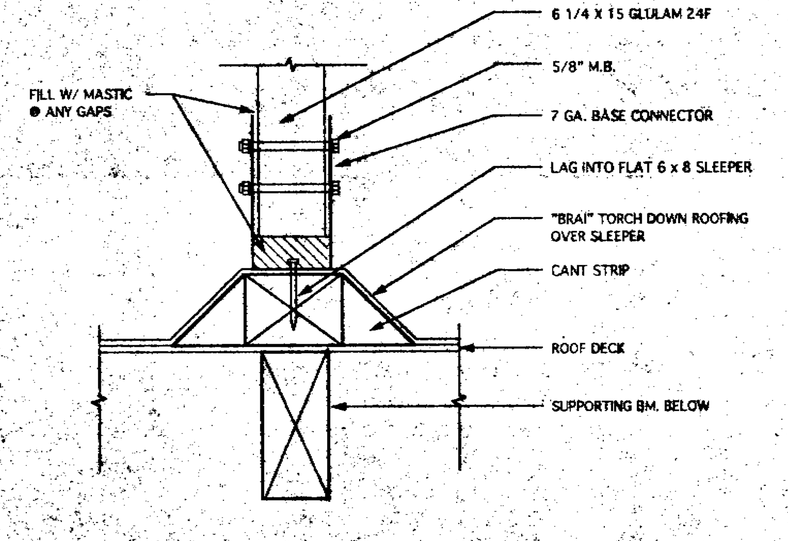

5 DETAIL SCALE 3/4" = 1'-0"

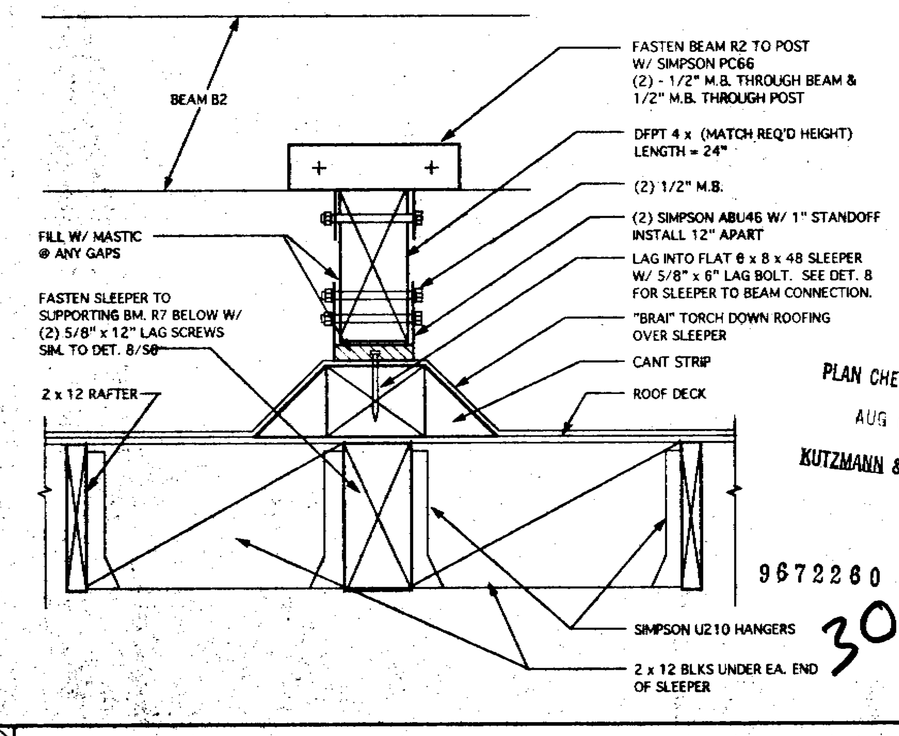

2 DETAIL SCALE 1 1/2" = 1'-0"

Copyright: 1996
EDWIN BRUCE ASSOCIATES. All designs drawings, and written material appearing herein, are protected and constitute original and unpublished work of the Architect and may not be copied, revised, re-used or disclosed without the written consent of the Architect. Equipment manufactured by others is excluded. Drawings and specifications are instruments of architectural service, and shall remain the property of the Architect. Use is restricted to the site for which they were prepared.

ALL STRUCTURAL
CONSULTING ENGINEERS
14499 BERCAW LN. SAN JOSE, CA. 95124 (408) 267-9725

KFC

K.F.C. JENSEN
CORNER OF BASCOM AVE. AND NAGLEE AVE.
SAN JOSE CALIFORNIA

PLAN CHECK APPROVAL
AUG 07 1996
KUTZMANN & ASSOCIATES

JULY 22, 1995	DATE
K.K.	DRAWN
AS SHOWN	SCALE
9405	JOB NO.

9672260

30

S-6

OF 46

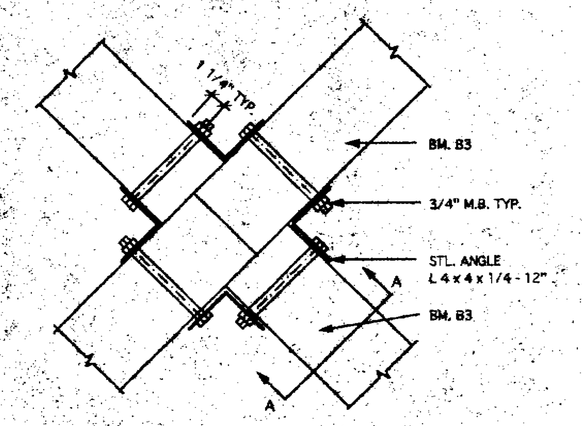

4 DETAIL SCALE 1 1/2" = 1'-0"

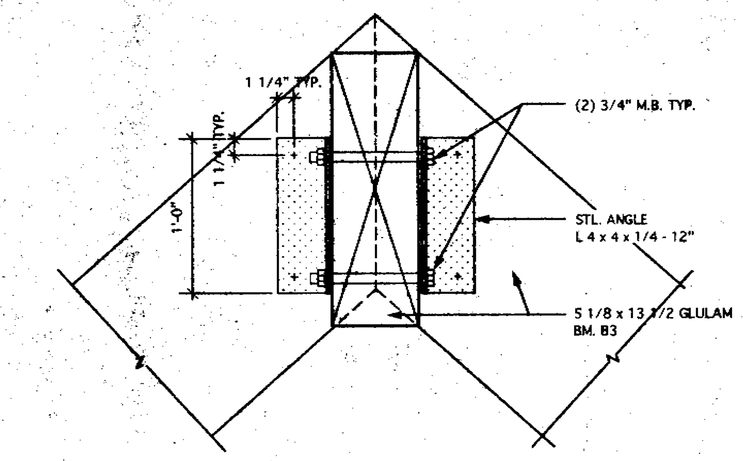

1 DETAIL SCALE 1 1/2" = 1'-0"

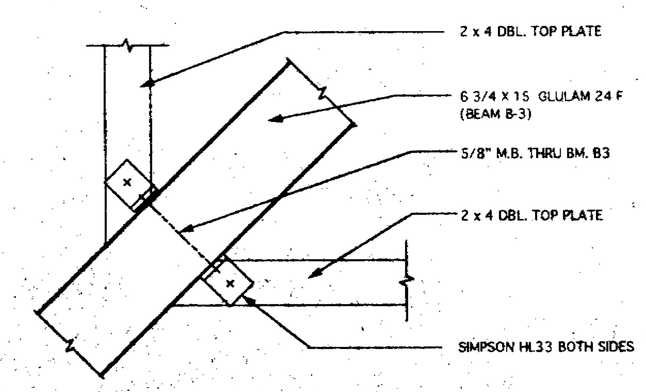

5 DETAIL SCALE 1 1/2" = 1'-0"

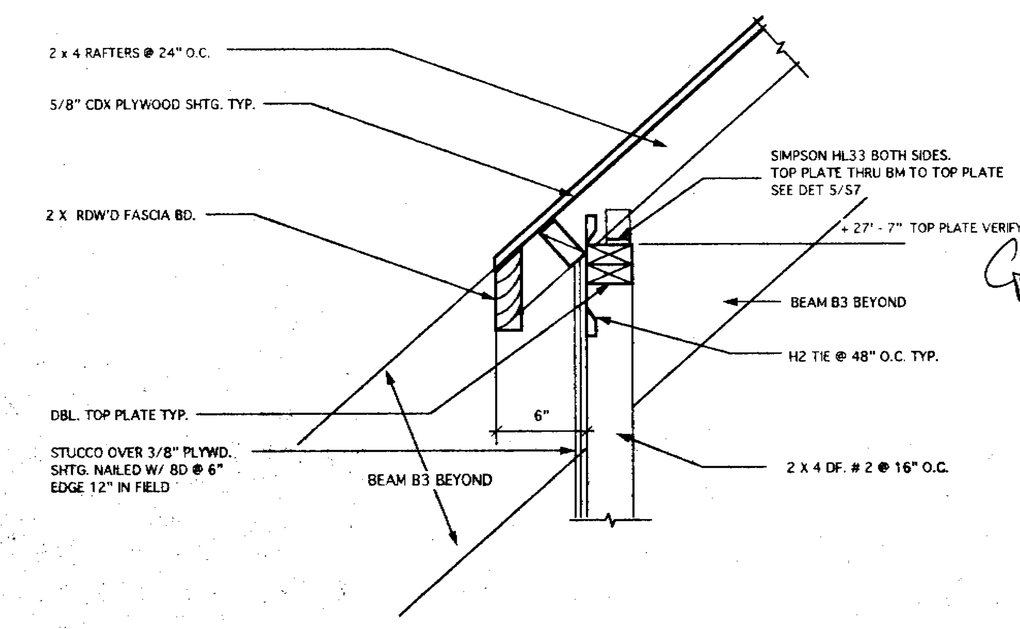

2 DETAIL SCALE 1 1/2" = 1'-0"

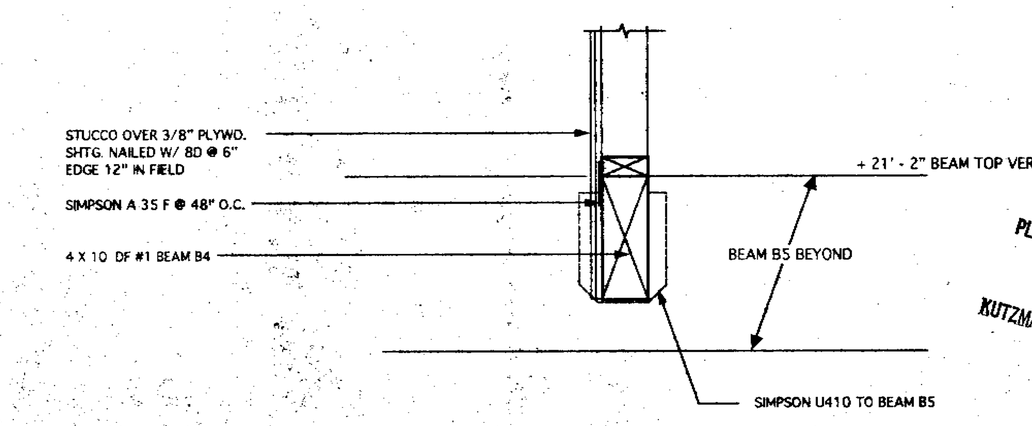

3 DETAIL SCALE 3/4" = 1'-0"

PLAN CHECK APPROVAL
AUG 08 1996
KUTZMANN & ASSOCIATES

9672260

31

Copyright 1996
EDWIN BRUCE ASSOCIATES. All designs drawings, and written material appearing herein, are protected and constitute original and unpublished work of the Architect and may not be copied, revised, re-used or disclosed without the written consent of the Architect. Equipment manufactured by others is excluded. Drawings and specifications are instruments of architectural service, and shall remain the property of the Architect. Use is restricted to the site for which they were prepared.

ALL STRUCTURAL
CONSULTING ENGINEERS
14499 BERCANY LN. SAN JOSE, CA. 95124 (408) 267-9725

KFC

K.F.C. JENSEN
CORNER OF BASCOM AVE. AND NAGLEE AVE.
SAN JOSE
CALIFORNIA

JULY 22, 1996	DATE
K.K.	DRAWN
AS SHOWN	SCALE
9405	JOB NO.

S-7

... OF ... 46

1. DISCREPANCIES

The Contractor shall coordinate the structural drawings with other mechanical and electrical drawings as to layout dimension. All discrepancies shall be reported to the architect for proper adjustments before proceeding with the work.

2. REFERENCE TO OTHER DRAWINGS

See architectural drawings for layout dimensions, elevations, depressions in slab, openings in walls and roof, paving, curbs, parapets, exterior grades, roof slopes, crickets, and drains.

3. OMISSIONS

In the event that certain features of the construction are not fully shown on the drawings or called for in the general notes or specifications, then their construction shall be of the same character as for similar conditions that are shown or called for.

4. FOUNDATION

Where practical, excavations shall be made as near as possible to the neat lines required by the size and shape of the structure. No material shall be excavated unnecessarily. As excavation progresses, conditions may develop requiring changes. Such changes shall be made only as directed by the architect. The design of the foundation has been based on the soil and foundation investigation provided by "Cleary Consultants, Inc." Project No. 398.9 dated 11-29-1995

5. CONCRETE

Concrete shall be regular weight and develop at 28 days, a compressive strength of 2500 psi. All construction joints shall be roughened to expose the aggregate solidly embedded in the mortar matrix with 1/4" projection. All reinforcing steel, bolts, anchors, sleeves, etc. shall be securely anchored in place and contact surface shall be thoroughly cleaned prior to placing concrete. All reinforcing details, fabrication, and installation shall conform to ACI Standard 315, latest edition. Stagger all splices where practical and not otherwise detailed. Minimum clearance for reinforcement shall be as follows:

A) 3" where concrete is placed against the earth.

B) 2" where concrete is exposed to earth, but placed in forms.

C) 1 1/2" from exterior face of walls.

D) 3/4" from interior face of walls and face of structural slabs.

E) 1 1/2" from face of beams, girders, and columns.

All steel reinforcement shall be deformed bars conforming to ASTM Designation A615 Grade 60 for #4 and larger and Grade 40 for #3 and smaller.
All concrete is to be reinforced unless noted "unreinforced concrete" on drawings.

6. STRUCTURAL STEEL

- ASTM A36 wide flanges shapes used in the construction of all beams and columns.
- ASTM A36 all other shapes and plates.
- ASTM A601 hot formed welded and seamless carbon steel structural tubing or A500 cold formed (Grade B for round tubing and Grade A for shaped tubing)
- ASTM A307 machine bolts, anchor bolts, and lag bolt
- AWS A5.5 E70XX electrodes for shielded metal arc welding
- Use E90XX for welding Grade 60 rebar

7. GENERAL AND SPECIAL INSPECTION

Testing and inspection shall be in compliance with UBC 94 and/or local codes.

8. BRACING AND SHORING

The contractor shall provide temporary bracing and shoring during The construction until that portion of the structure has sufficient strength to support safely its weight and loads placed thereon. All bracing and shoring shall be designed to sustain all construction loads, soil loads, lateral loads, and other loads that the structure may be subjected to.

1. Beams, joists, and purlins shall be cut only as shown on the drawings or as approved by the architect. Holes and cutouts shall be not larger than 1/5 on depth of member from the top nor be located farther than 3 times depth of member from support.

2. Double top plates shall be 2" nominal thickness x stud width, with lapped splices a minimum of 4'-0" long, except as shown or noted. All splices shall be centered over studs.

3. Solid blocking indicated thus shall be 2x unless otherwise noted. Blocking shall be full depth of members, studs, joists, etc. Even though not shown on drawings, wall between 8 and 16 feet high, shall have 1 row of blocking at mid-height. Walls over 16 feet high shall have a row of blocking at 1/3 and at 2/3 of freight. This blocking may be used to support the edges of plywood sheathing.

4. Cross bridging shall be as shown or 2x solid blocking or approved metal bridging unless otherwise noted. Flows of cross bridging shall be not more than 10'-0" apart, nor more than 10'-0" from each end of joists. Cross bridging shall be used at all roof and floor joists even though not shown on the drawings, except that roof joists 8" deep or less need not be bridged.

Timber fasteners and hangers shall be manufactured by Simpson Strong-Tie Company or approved equivalent. Fasteners shall be nailed as recommended by manufacturer.

Bolts in wood framing shall be standard machine bolts (A307), unless otherwise noted. Bolt holes in wood shall be 1/32" larger than bolt diameter. Bolt heads and nuts shall bear on standard malleable iron washers, or plate washers of the following sizes. Carriage bolts require washers under nuts only.

1/2" diam. bolts: use 2 1/4" x 2 1/4" x 5/16" thick plate washers
5/8" diam. bolts: use 2 1/4" x 2 1/4" x 5/16" thick plate washers
3/4" diam. bolts: use 2 3/4" x 2 3/4" x 5/16" thick plate washers
7/8" diam. bolts: use 3 1/8" x 3 1/8" x 3/8" thick plate washers
1" diam. bolts: use 3 5/8" x 3 5/8" x 7/16" thick plate washers

7. Pipes in stud walls shall have proper clearances. Maximum hole diameter shall be 1/3 of width of member and centered in width of member. Notching will NOT be allowed. Where pipes are larger than this, provide sill bolt each side of the pipe, as shown on the vertical details for the ends of sills.

8. Plywood sheathing on roof and where noted on walls shall be CDX w/ ext. glue.

9. Lag bolts area 3/4" O.A.S.T.M. A307, unless noted otherwise and shall be screwed into predrilled holes same diameter as root of thread. Enlarge hole to shank diameter for length of shank.

10. Glue laminated beams shall be combination 24F-V8, Douglas-fir exterior glue, industrial appearance and for dry condition use. The manufacture and fabrication shall be in compliance with U.B.C. standards.

11. Carpentry: Lumber grades: Standard grading rules no.16, West Coast Lumber Inspection Bureau.

ITEM	SPECIES	GRADE	SURFACING
Architectural Partitions Light, Framing and Studs 2 x 4 or 2 x 6	D.F.	Stud	S4S
Structural Light Framing 2" to 4" thick or wide	D.F.	#2	S4S
Structural Joists & Planks & Studs 2" to 4" thick, 5" and wider	D.F.	#1	S4S
Beams and Stringers 5" and thicker	D.F.	#1	S4S
Bearing & Shear Walls & Roof			
Posts and Timbers	D.F.	#1	S4S
Sills	P.T.D.F.	#1	S4S

Nails should be common or box and must comply with typical nailing schedule 23-I-Q, except where otherwise shown or noted. Where splitting of wood is likely to occur, nail holes shall be predrilled. Drill holes 1/32" smaller than nail diameter and 1/2" less than nail length. Nailing not noted below or on other sections and/or details shall be at least two nails at all contact points using 8d through 1x material and 12d through 2x material.

TABLE 23-I-Q—NAILING SCHEDULE

CONNECTION	NAILING[1]
1. Joist to sill or girder, toenail	3-8d
2. Bridging to joist, toenail each end	2-8d
3. 1" x 6" (25 mm x 152 mm) subfloor or less to each joist, face nail	2-8d
4. Wider than 1" x 6" (25 mm x 152 mm) subfloor to each joist, face nail	3-8d
5. 2" (51 mm) subfloor to joist or girder, blind and face nail	2-16d
6. Sole plate to joist or blocking, typical face nail Sole plate to joist or blocking, at braced wall panels	16d at 16" (406 mm) o.c. 3-16d per 16" (406 mm)
7. Top plate to stud, end nail	2-16d
8. Stud to sole plate	4-8d, toenail or 2-16d, end nail
9. Double studs, face nail	16d at 24" (610 mm) o.c.
10. Doubled top plates, typical face nail Double top plates, lap splice	16d at 16" (406 mm) o.c. 8-16d
11. Blocking between joists or rafters to top plate, toenail	3-8d
12. Rim joist to top plate, toenail	8d at 6" (152 mm) o.c.
13. Top plates, laps and intersections, face nail	2-16d
14. Continuous header, two pieces	16d at 16" (406 mm) o.c. along each edge
15. Ceiling joists to plate, toenail	3-8d
16. Continuous header to stud, toenail	4-8d
17. Ceiling joists, laps over partitions, face nail	3-16d
18. Ceiling joists to parallel rafters, face nail	3-16d
19. Rafter to plate, toenail	3-8d
20. 1" (25 mm) brace to each stud and plate, face nail	2-8d
21. 1" x 8" (25 mm x 203 mm) sheathing or less to each bearing, face nail	2-8d
22. Wider than 1" x 8" (25 mm x 203 mm) sheathing to each bearing, face nail	3-8d
23. Built-up corner studs	16d at 24" (610 mm) o.c.
24. Built-up girder and beams	20d at 32" (813 mm) o.c. at top and bottom and staggered 2-20d at ends and at each splice
25. 2" (51 mm) planks	2-16d at each bearing

(Continued)

TABLE 23-I-Q—NAILING SCHEDULE—(Continued)

CONNECTION	NAILING[1]
26. Wood structural panels and particleboard:[2] Subfloor, roof and wall sheathing (to framing): (1 inch = 25.4 mm) 1/2" and less 19/32"-3/4" 7/8"-1" 1 1/8"-1 1/4" Combination subfloor-underlayment (to framing): (1 inch = 25.4 mm) 3/4" and less 7/8"-1" 1 1/8"-1 1/4"	 6d[3] 8d[4] or 6d[5] 8d[3] 10d[4] or 8d[5] 6d[5] 8d[5] 10d[4] or 8d[5]
27. Panel siding (to framing): 1/2" (13 mm) or less 5/8" (16 mm)	 6d[6] 8d[6]
28. Fiberboard sheathing:[7] 1/2" (13 mm) 25/32" (20 mm)	 No. 11 ga.[8] 6d[4] No. 16 ga.[9] No. 11 ga.[8] 8d[4] No. 16 ga.[9]
29. Interior paneling 1/4" (6.4 mm) 3/8" (9.5 mm)	 4d[10] 6d[11]

[1]Common or box nails may be used except where otherwise stated.
[2]Nails spaced at 6 inches (152 mm) on center at edges, 12 inches (305 mm) at intermediate supports except 6 inches (152 mm) at all supports where spans are 48 inches (1219 mm) or more. For nailing of wood structural panel and particleboard diaphragms and shear walls, refer to Section 2314.3. Nails for wall sheathing may be common, box or casing.
[3]Common or deformed shank.
[4]Common.
[5]Deformed shank.
[6]Corrosion-resistant siding or casing nails conforming to the requirements of Section 2325.1.
[7]Fasteners spaced 3 inches (76 mm) on center at exterior edges and 6 inches (152 mm) on center at intermediate supports.
[8]Corrosion-resistant roofing nails with 7/16-inch-diameter (11 mm) head and 1 1/2-inch (38 mm) length for 1/2-inch (13 mm) sheathing and 1 3/4-inch (44 mm) length for 25/32-inch (20 mm) sheathing conforming to the requirements of Section 2325.1.
[9]Corrosion-resistant staples with nominal 7/16-inch (11 mm) crown and 1 1/8-inch (29 mm) length for 1/2-inch (13 mm) sheathing and 1 1/2-inch (38 mm) length for 25/32-inch (20 mm) sheathing conforming to the requirements of Section 2325.1.
[10]Panel supports at 16 inches (406 mm) (20 inches (508 mm) if strength axis in the long direction of the panel, unless otherwise marked). Casing or finish nails spaced 6 inches (152 mm) on panel edges, 12 inches (305 mm) at intermediate supports.
[11]Panel supports at 24 inches (610 mm). Casing or finish nails spaced 6 inches (152 mm) on panel edges, 12 inches (305 mm) at intermediate supports.

BEST AVAILABLE COPY

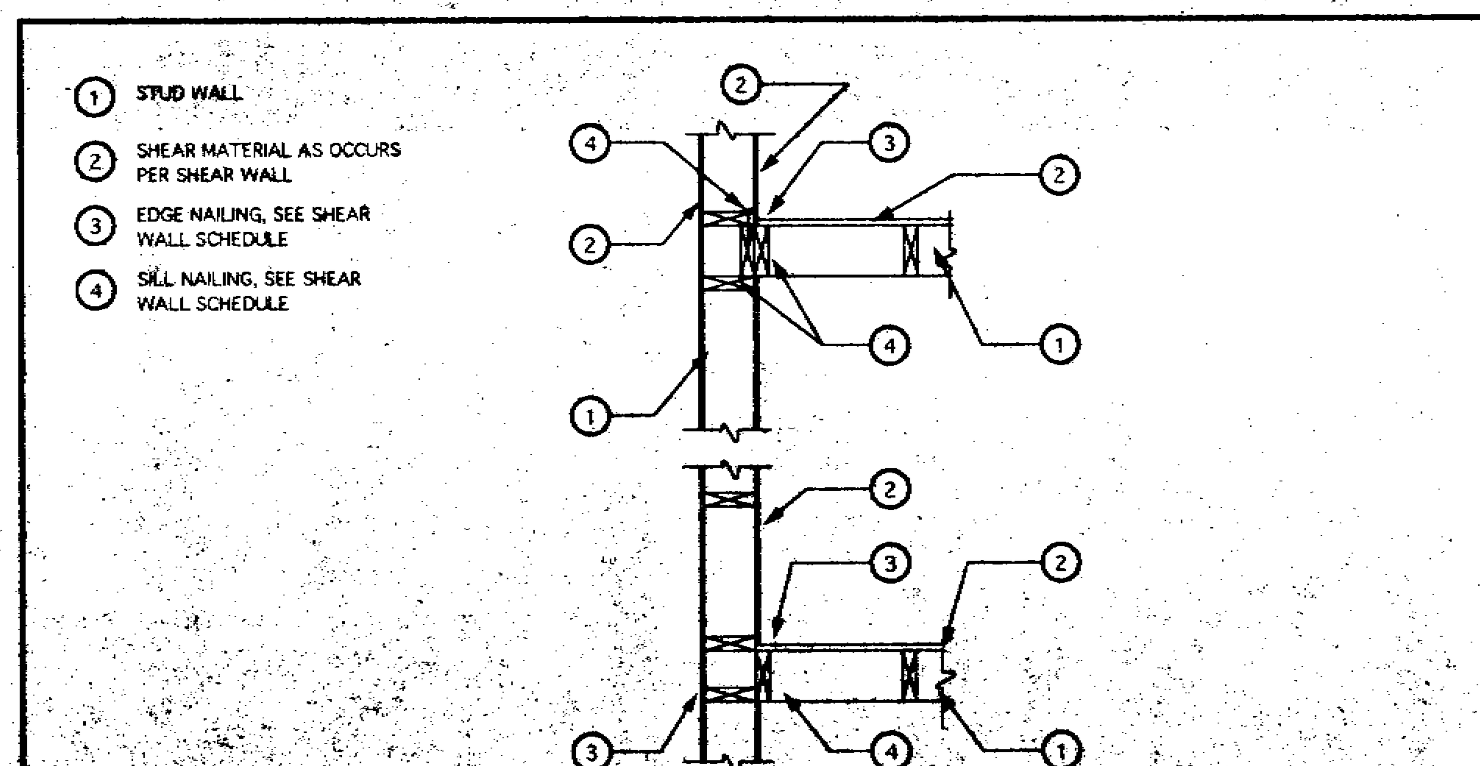

2 TYPICAL WALL CONNECTIONS

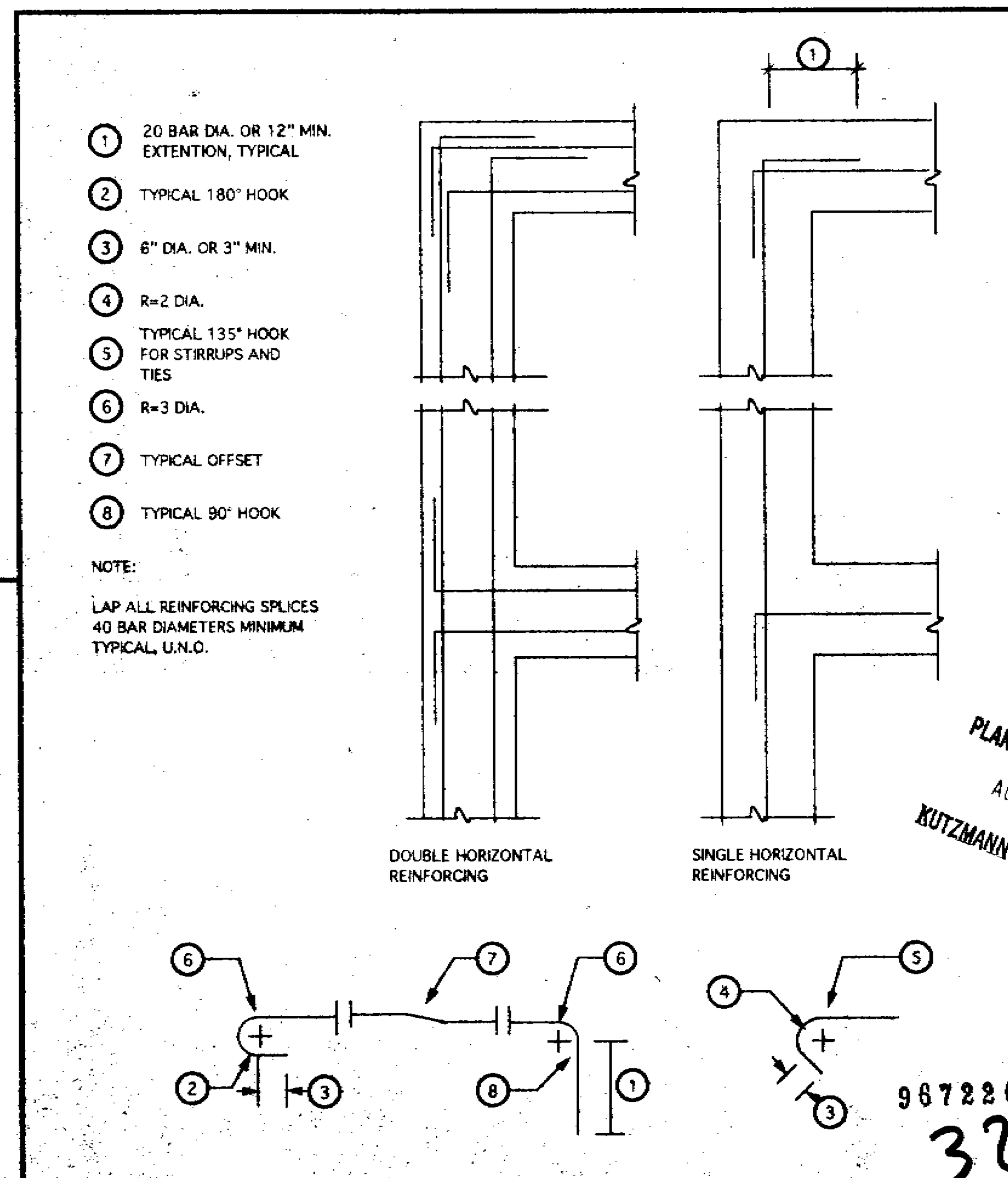

1 TYPICAL HORIZONTAL CONC. REINFORCING

PLAN CHECK APPROVAL
AUG 09 1996
KUTZMANN & ASSOCIATES

9672260
32

Copyright 1996 EDWIN BRUCE ASSOCIATES. All designs drawings, and written material appearing herein, are protected and constitute original and unpublished work of the Architect and may not be copied, revised, re-used or disclosed without the written consent of the Architect. Equipment manufactured by others is excluded. Drawings and specifications are instruments of architectural service, and shall remain the property of the Architect. Use is restricted to the site for which they were prepared.

ALL STRUCTURAL
CONSULTING ENGINEERS
14499 BERCAW LN. SAN JOSE, CA. 95124 (408) 267-9725

KFC

K.F.C. JENSEN
CORNER OF BASCOM AVE. AND NAGLEE AVE.
SAN JOSE CALIFORNIA

DATE	MAY 24, 1996
DRAWN	D.C.
SCALE	
JOB NO.	9405

S-8
OF

SITE PLAN

1/8" = 1'-0"

NOTE: 1

1. ON SITE WATER PIPING SHALL BE CHLORINATED AND TREATED IN ACCORDANCE WITH CITY OF SAN JOSE STANDARD SPECIFICATIONS. THE TEST RESULTS SHALL BE APPROVED BY THE CITY PRIOR CONNECTION TO CITY SYSTEM.

2. SEWER PIPING WITH SLOPE LESS THAN 0.01 (1/4 " PER FT) REQIRES A CIVIL ENGINEER TO SET THE GRADES IN THE FIELD AND SUBMIT A REPORT TO BUILDING INSPECTION.

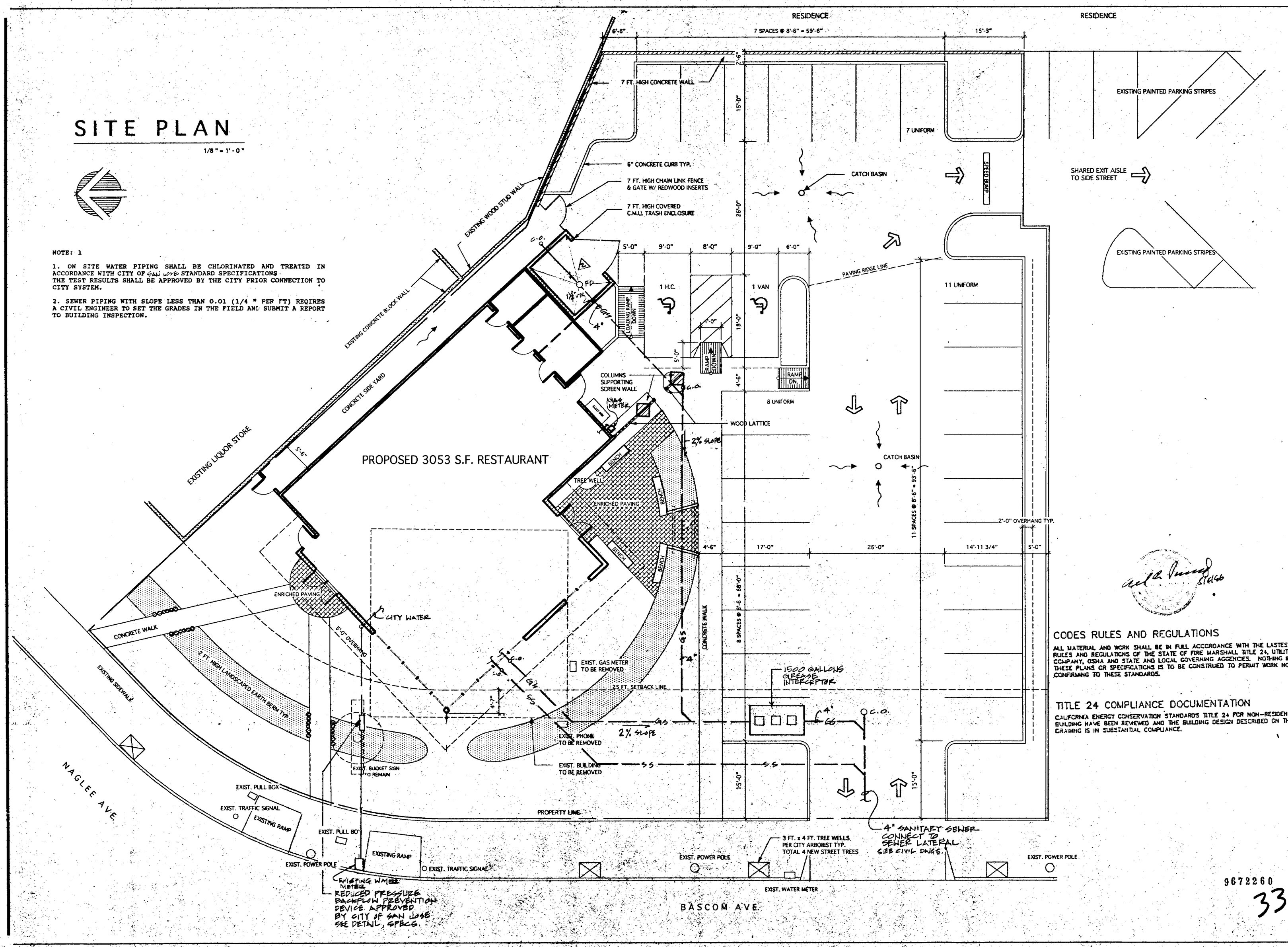

CODES RULES AND REGULATIONS

ALL MATERIAL AND WORK SHALL BE IN FULL ACCORDANCE WITH THE LASTEST RULES AND REGULATIONS OF THE STATE OF FIRE MARSHALL TITLE 24, UTILITY COMPANY, OSHA AND STATE AND LOCAL GOVERNING AGGENCIES. NOTHING IN THESE PLANS OR SPECIFICATIONS IS TO BE CONSTRUED TO PERMIT WORK NOT CONFIRMING TO THESE STANDARDS.

TITLE 24 COMPLIANCE DOCUMENTATION

CALIFORNIA ENERGY CONSERVATION STANDARDS TITLE 24 FOR NON-RESIDENTIAL BUILDING HAVE BEEN REVIEWED AND THE BUILDING DESIGN DESCRIBED ON THIS DRAWING IS IN SUBSTANTIAL COMPLIANCE.

Copyright 1996
EDWIN BRUCE ASSOCIATES. All designs drawings, and written material appearing herein, are protected and constitute original and unpublished work of the Architect and may not be copied, revised, re-used or disclosed without the written consent of the Architect. Equipment manufactured by others is excluded. Drawings and specifications are instruments of architectural service, and shall remain the property of the Architect. Use is restricted to the site for which they were prepared.

1 CITY COMMENTS 06-07-96
2 CITY COMMENTS 8-6-96

KFC

K.F.C. JENSEN

CORNER OF BASCOM AVE. AND NAGLEE AVE.
SAN JOSE
CALIFORNIA

5-4-96	DATE
	DRAWN
1/8"=1'-0"	SCALE
	JOB NO.

9672260

33

P-1

OF

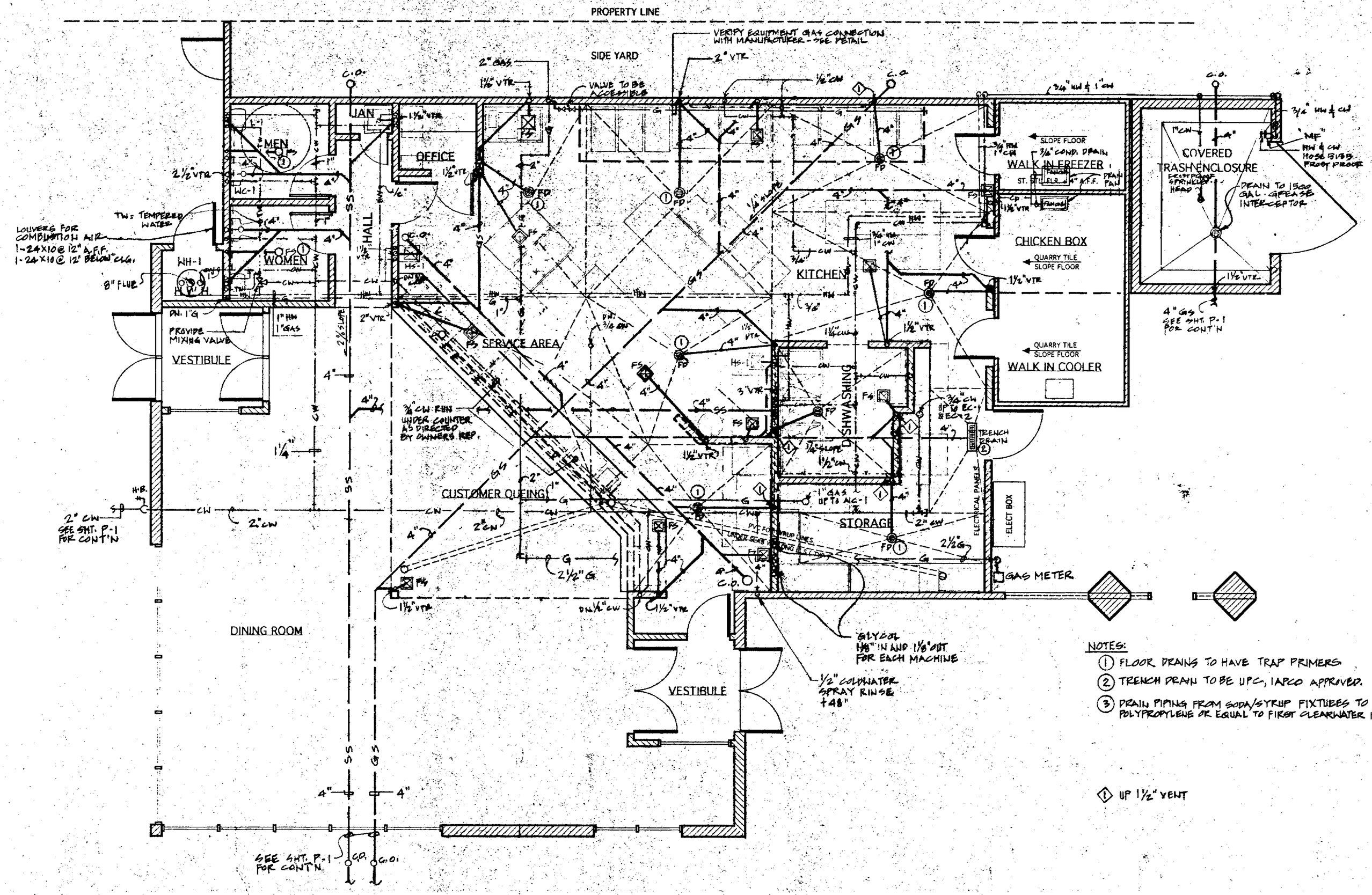

NOTES:

1. FLOOR DRAINS TO HAVE TRAP PRIMERS
2. TRENCH DRAIN TO BE UPC, IAPMO APPROVED.
3. DRAIN PIPING FROM SODA/SYRUP FIXTURES TO BE POLYPROPYLENE OR EQUAL TO FIRST CLEARWATER INLET.

PLUMBING FLOOR PLAN

SCALE: 1/4" = 1'-0"

CODES RULES AND REGULATIONS

ALL MATERIAL AND WORK SHALL BE IN FULL ACCORDANCE WITH THE LASTEST RULES AND REGULATIONS OF THE STATE OF FIRE MARSHALL TITLE 24, UTILITY COMPANY, OSHA AND STATE AND LOCAL GOVERNING AGGENCIES. NOTHING IN THESE PLANS OR SPECIFICATIONS IS TO BE CONSTRUED TO PERMIT WORK NOT CONFIRMING TO THESE STANDARDS.

9672260

TITLE 24 COMPLIANCE DOCUMENTATION

CALIFORNIA ENERGY CONSERVATION STANDARDS TITLE 24 FOR NON-RESIDENTIAL BUILDING HAVE BEEN REVIEWED AND THE BUILDING DESIGN DESCRIBED ON THIS DRAWING IS IN SUBSTANTIAL COMPLIANCE.

34

Copyright 1996
EDWIN BRUCE ASSOCIATES. All designs drawings, and written material appearing herein, are protected and constitute original and unpublished work of the Architect and may not be copied, revised, re-used or disclosed without the written consent of the Architect. Equipment manufactured by others is excluded. Drawings and specifications are instruments of architectural service, and shall remain the property of the Architect. Use is restricted to the site for which they were prepared.

CITY COMMENTS 6-7-96 — 1
PER CITY COMMENTS 8-6-96 — 2

AMCON Consultants, Inc.
Consulting Engineers
Reid-Hillview Airport
2660 John Montgomery Drive
San Jose, CA. 95148
Ph. 408/272 8800
Fax 408/272 5645

KFC

K.F.C. JENSEN
CORNER OF BASCOM AVE. AND NAGLEE AVE.
SAN JOSE CALIFORNIA

5-4-96	DATE
	DRAWN
1/4" = 1'-0"	SCALE
	JOB NO.

P-2
OF

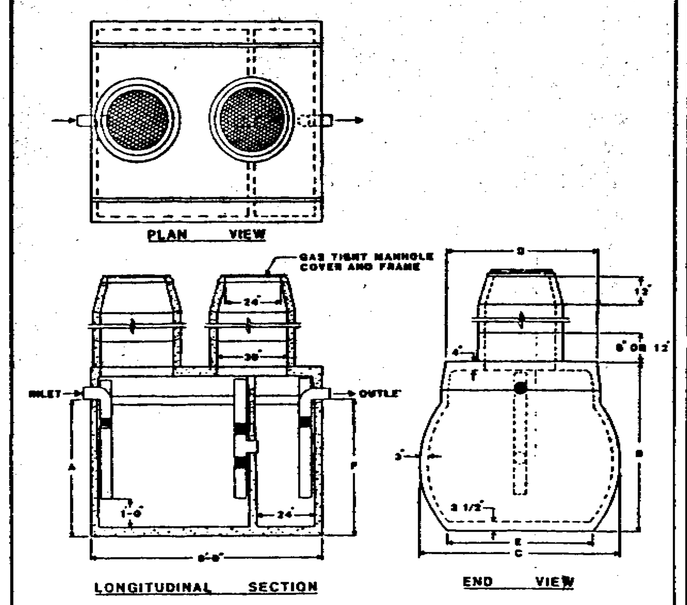

M.C. Nottingham Co. of California, 4922 Irwindale Ave., Irwindale, Ca. 91706

GREASE INTERCEPTOR CAPACITY 1500 GALLONS

TYPICAL FOR CALIFORNIA EXCEPT INYO/MONO COUNTY AND THE SCHECTOR AREA

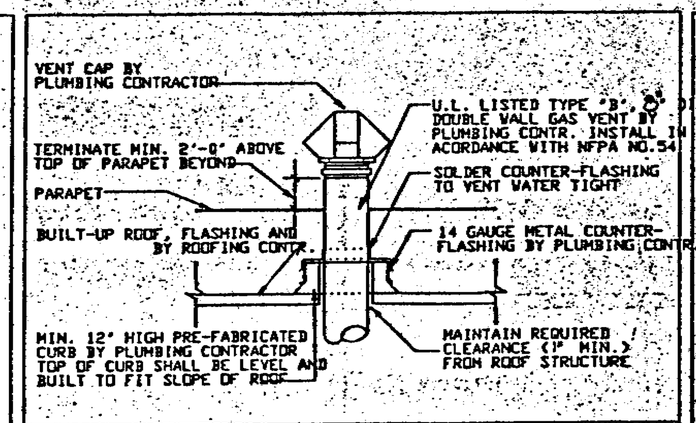

WATER HEATER VENT DETAIL — SCALE N/A — 1 R105

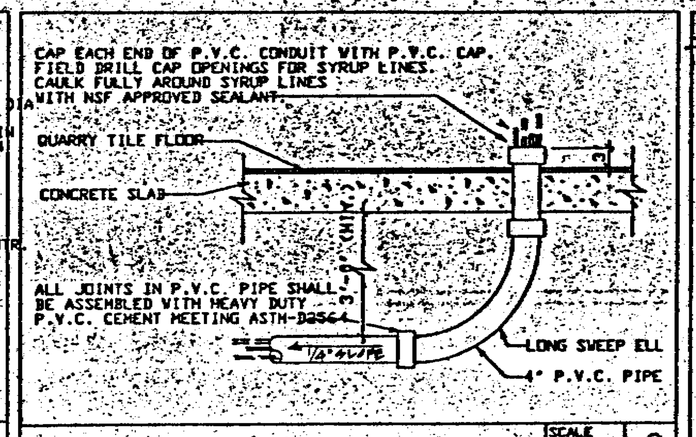

SYRUP/REGISTER CONDUIT DETAIL — SCALE 3/4" = 1'-0" — 2 M102

PLUMBING GENERAL NOTES

M111

1. PRIOR TO COMMENCING WORK ON THIS PROJECT, CONTRACTOR SHALL VERIFY LOCATION, INVERT, SIZE, AND CONDITION OF EXISTING UTILITIES. SHOULD CONDITIONS EXIST OTHER THAN THOSE INDICATED WHICH COULD ALTER THE DESIGN INDICATED, CONTRACTOR SHALL NOTIFY KFC IMMEDIATELY FOR A DECISION BEFORE PROCEEDING.
2. ALL PIPING SHALL BE CONCEALED UNLESS SPECIFICALLY INDICATED OTHERWISE.
3. ALL ROUGH-IN PLUMBING AND FINAL CONNECTIONS TO KITCHEN EQUIPMENT PLAN SHALL BE MADE BY THE CONTRACTOR. REFER TO KITCHEN EQUIPMENT PLAN AND SCHEDULE FOR LOCATION AND TYPE OF EQUIPMENT TO DETERMIN PIPE SIZES AND TYPES OF CONNECTIONS.
4. SET TOP OF HUB DRAIN 2" ABOVE THE TOP OF CONCRETE SLAB OR TREATED WOOD CURB.
5. PROVIDE A LEVER HANDLE GAS COCK IN BRANCH PIPING OF EACH GAS APPLIANCE. ALSO FOR EACH APPLIANCE, INSTALL QUICK DISCONNECT, FLEXIBLE PIPE AND RESTRAINING DEVICE FURNISHED BY KFC.
6. PLUMBING CONTRACTOR SHALL REVIEW ARCHITECTURAL AND EQUIPMENT SHEETS

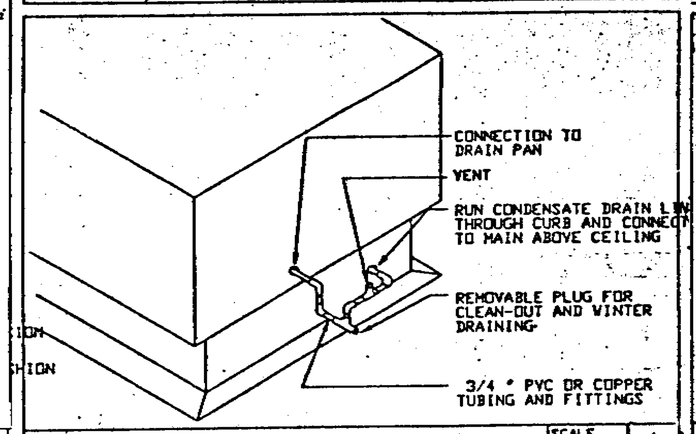

DETAIL - CONDENSATE TRAP — SCALE N.T.S. — 4 R106

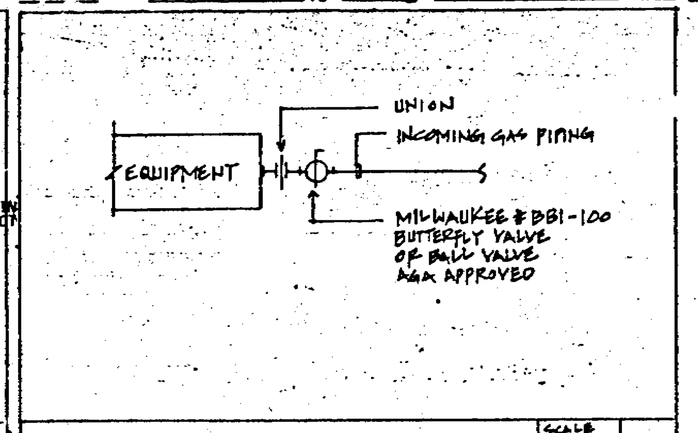

GAS CONNECTION DETAIL — SCALE N.T.S. — 5

ITEM	DESCRIPTION
WATER CLOSET WC-1	AMERICAN STANDARD NO. 2168.100 ELONGATED CADET TANK TYPE CLOSET OR EQUAL BY ELJER OR KOHLER: 5311.012 WHITE SEAT. TANK 4086.700 WITH TANK COVER LOCKING DEVICE, SUPPLY FITTING FLOOR FLANGE, LOCATE LEVER ON WIDE SIDE OF STALL
LAVATORY L-1	AMERICAN STANDARD LUCERNE 0356.015 20½ x 18½ ENAMELED CAST IRON WITH WALL HANGER: 0602.160 TWO HANDLE WIDESPREAD FAUCET WITH 0.5 G.P.M. FLOW RESTRICTOR ;McGUIRE 8088 P-TRAP;McGUIRE 1587BGRAL GRID DRAIN ; McGUIRE 2158LK SUPPLY FITTINGS; PROVIDE 1" THICK AEROTUBE INSULATION ON P-TRAP AND SUPPLIES (PAINT WHITE). SET LAVATORY AT HANDICAP HEIGHT.
HS-1 HAND SINK	WASSERSTROM 10"X14"X6", STAINLESS STEEL CONSTRUCTION WITH WRIST HANDLE.
POT FILLER	CHICAGO FAUCET COMPANY #332 SINGLE WALL FAUCET WITH DOUBLE JOINTED SPOUT WITH #53 SET FOR ½" FEMALE THREAD.
MOP SINK MS-1	FLORESTONE 24" X 24" X 10", BASIN WITH 830-AA FAUCET W/ VACUUM BREAKER, 832-AA-30" LONG HOSE AND BRACKET, 889-CC-24" x 3" MOP HANGER PLATE, ODC-3SN DRAIN PIPE CONNECTOR MOUNT FAUCET AT 30" A.F.F.
CHROME PLATED HOSE BIBB	CENTRAL BRASS CO. #576 WITH REMOVABLE HANDLE
FLOOR DRAIN FD-1	ZURN-2005-AP SIZE 2" COMPLETE WITH TRAP PRIMER.
FLOOR DRAIN FD-2	SAME AS FD-1 EXCEPT 4".
AIR CHAMBER	SMITH 5005, 3/4", IN COLD AND HOT WATER LINES SERVING 3-COMPARTMENT SINK.
FROST PROOF HOSE BIBB	ZURN Z-1310 ECOLOTROL ANTI-SIPHON, NON-FREEZE HYDRANT WITH INTEGRAL BACKFLOW PREVENTOR.
WATER HEATER WH-1	TURBO 55F-80-180 WATER HEATER, WITH 75 GALLON CAPACITY, AND A RECOVERY OF 68 G.P.H. AT 100° RISE. HEATER SHALL BE PROVIDED WITH A WATTS NO. 40 SERIES PRESSURE AND TEMPERATURE RELIEF VALVE AND COPPER DISCHARGE LINE. PROVIDE VALVE AND UNION CONNECTION TO HEATER (180,000 BTUH. INSTALL SEISMIC STRAP PER CODE.
MIXING FAUCET "MF"	CAW WASH MIXING FAUCET 2341.075 COMPLETE WITH END, VACUUM BREAKER & STOPS IN SHANKS.
HUB DRAIN N/A	SHALL CONSIST OF CAST IRON P-TRAP BELOW FLOOR HAVING CAST IRON PIPE CAULKED INTO SAME AND EXTEND TWO INCHES ABOVE FLOOR LINE.
MIXING VALVE	WATTS N 170L -M1 (3/4") . PROVIDE CHECK VALVE IN COLD AND HOT WATER LINES, DIAL THERMOMETER IN TEMPERED WATER LINE, AND GATE VALVES IN COLD, HOT, AND TEMPERED LINES.
ROOF DRAIN RD	#1010-R-C, SIZE 3" COMPLETE, ZURN OR EQUAL
TRENCH DRAIN	SMITH #2710, SHALLOW HUB BODY, 4" OUTLET, LIGHT DUTY GRATING 31 1/4" X 12" NOMINAL SIZE, NICKEL BRONZE FINISH
FLOOR SINK FS	#3160, SIZE 4" WITH DOME STRAINER, RIM AND GRATE. CUT GRATE FOR FOOD SERVICE EQUIPMENT INDIRECT DRAIN PIPING W/ REQUIRED GRATE MEDIUM DUTY, SEAMLESS, STAINLESS GRATE WITH ¼ SQUARE OPENING

PLUMBING FIXTURE SCHEDULE — N1

DESIGNATION	ITEM
—V—	W WASTE LINE
- - -V- - -	V VENT LINE ABOVE SLAB
—C—	C.V. COLD WATER LINE ABOVE SLAB
- - -C- - -	C.V. COLD WATER LINE UNDER SLAB
—H—	H.V. HOT WATER LINE
—G—	G GAS LINE
—o	UP LINE UP (END OF RUN)
—D	DN. LINE DOWN (END OF RUN)
—o—	LINE UP (IN PIPE RUN)
—T—	TEMPERED WATER LINE
—⊤—	GATE VALVE
—G—⊤—	GAS VALVE
- - -D- - -	CONDENSATE DRAIN ABOVE SLAB
	PVC UNDERGROUND CONDUIT FOR SYRUP AND REGISTER CABLES
	C. WATER CLOSET
	C.I. CAST IRON
o	C.O. CLEANOUT (FLOOR)
⊢	C.O. CLEANOUT (WALL)
	C.P.H.B. CHROME PLATED HOSE BIBB
⊠	F.D. FLOOR DRAIN
⊕	F.P.H.B. FROST PROOF HOSE BIBB
o	F.S. FLOOR SINK
	H.S. HAND SINK
	L. LAVATORY
	M.S. MOP SINK
	R. & C. ROUGH AND CONNECT
	T.D. TRENCH DRAIN
	U. URINAL
	V.T.R. VENT THRU ROOF
	W.H. WATER HEATER

PLUMBING LEGEND — N1 1

BEST AVAILABLE COPY

CODES RULES AND REGULATIONS

ALL MATERIAL AND WORK SHALL BE IN FULL ACCORDANCE WITH THE LASTEST RULES AND REGULATIONS OF THE STATE OF FIRE MARSHALL TITLE 24, UTILITY COMPANY, OSHA AND STATE AND LOCAL GOVERNING AGGENCIES. NOTHING IN THESE PLANS OR SPECIFICATIONS IS TO BE CONSTRUED TO PERMIT WORK NOT CONFIRMING TO THESE STANDARDS.

9672260

35

TITLE 24 COMPLIANCE DOCUMENTATION

CALIFORNIA ENERGY CONSERVATION STANDARDS TITLE 24 FOR NON-RESIDENTIAL BUILDING HAVE BEEN REVIEWED AND THE BUILDING DESIGN DESCRIBED ON THIS DRAWING IS IN SUBSTANTIAL COMPLIANCE.

Copyright 1996
EDWIN BRUCE ASSOCIATES. All designs drawings, and written material appearing herein, are protected and constitute original and unpublished work of the Architect and may not be copied, revised, re-used or disclosed without the written consent of the Architect. Equipment manufactured by others is excluded. Drawings and specifications are instruments of architectural service, and shall remain the property of the Architect. Use is restricted to the site for which they were prepared.

AMCON Consultants, Inc.
Consulting Engineers
Reid-Hillview Airport
2660 John Montgomery Drive
San Jose, CA. 95148
Ph. 408/272 8800
Fax 408/272 5645

KFC

K.F.C.: JENSEN
CORNER OF BASCOM AVE. AND NAGLEE AVE.
SAN JOSE CALIFORNIA

5-4-96	DATE
	DRAWN
NO SCALE	SCALE
	JOB NO.

P-3
OF

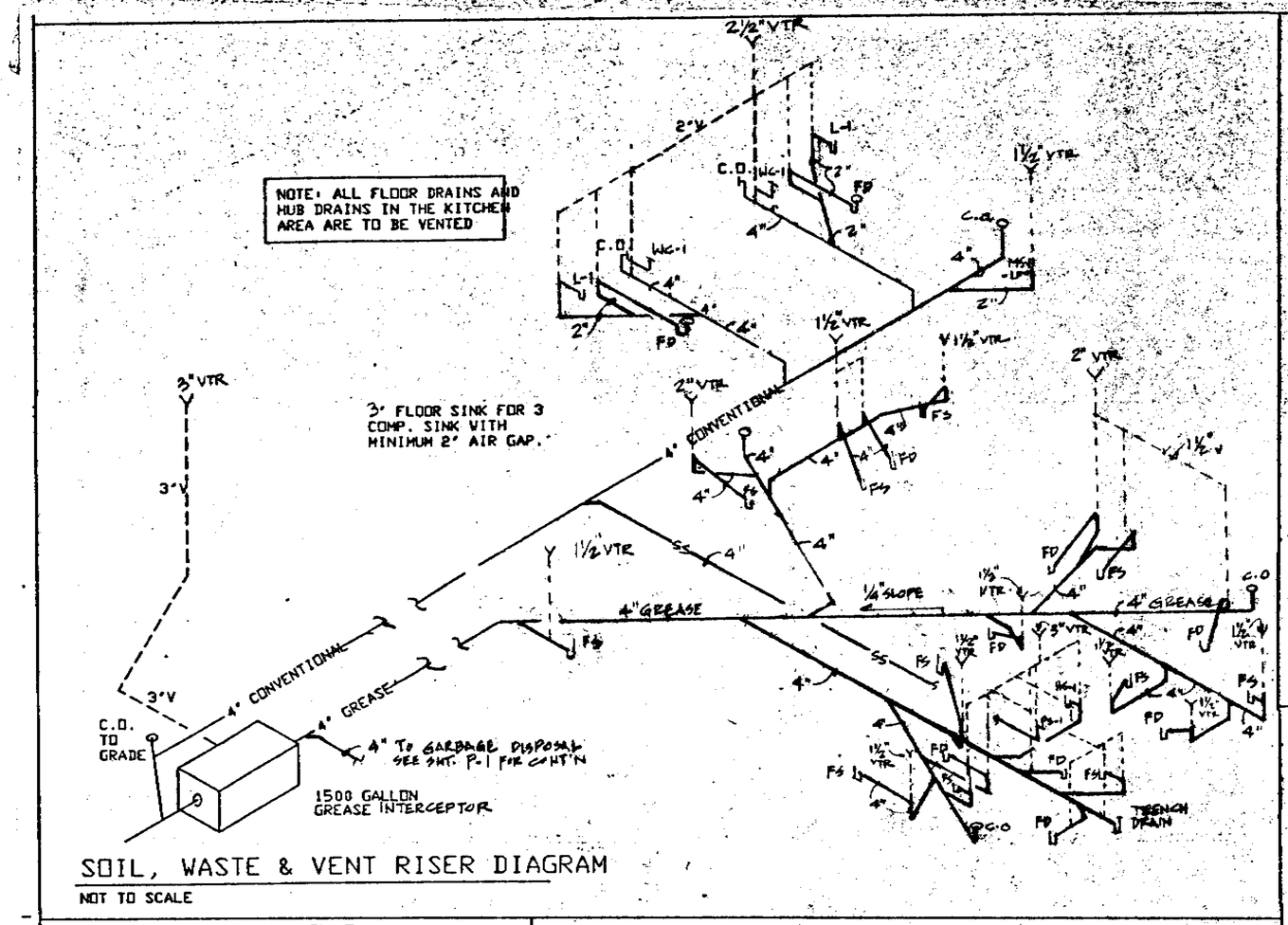

SOIL, WASTE & VENT RISER DIAGRAM

NOT TO SCALE

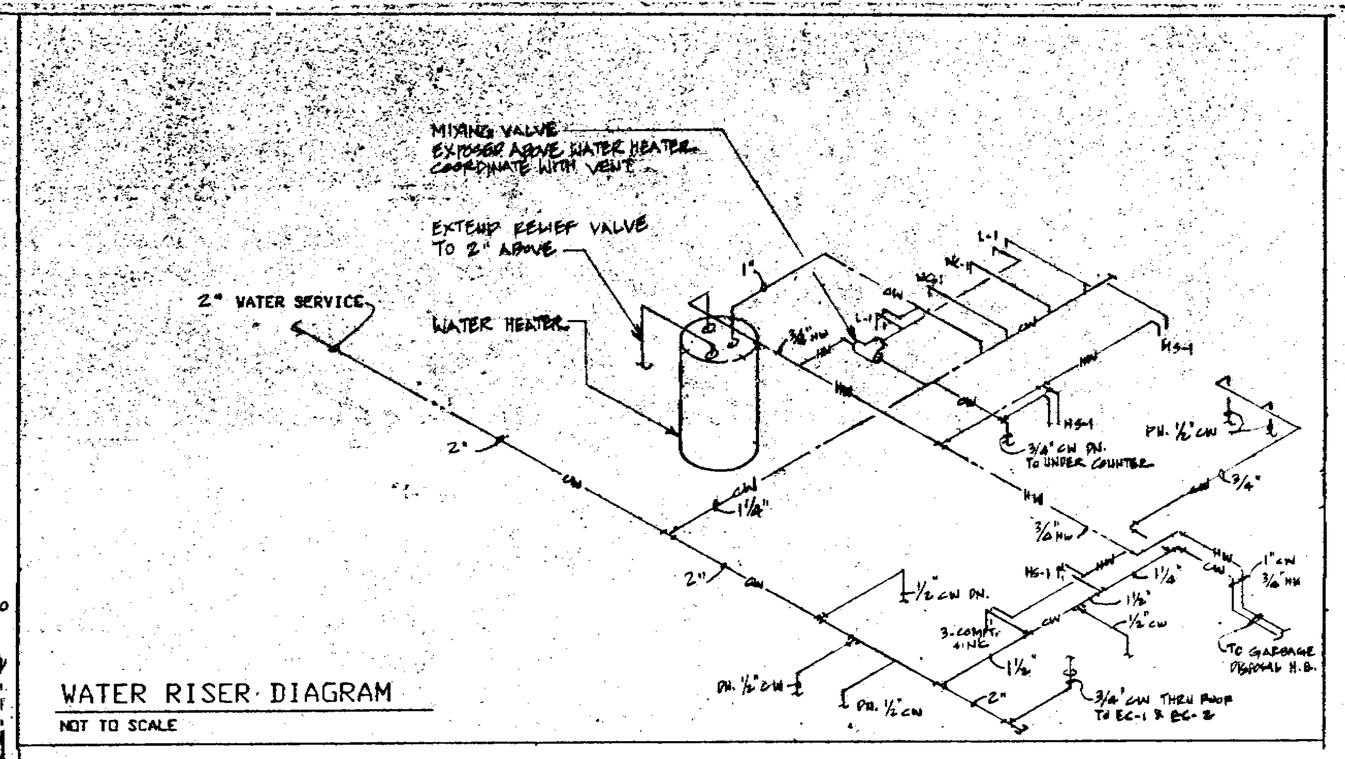

WATER RISER DIAGRAM

NOT TO SCALE

GAS LOAD		
TRIPLE VAT FRYER	1 REQ'D AT 165 CFH	= 165 CFH
2 BURNER RANGE	1 REQ'D AT 6 CFH	= 6 CFH
OPEN FRYER	3 REQ'D AT 150 CFH	= 450 CFH
WATER HEATER	1 REQ'D AT 75 CFH	= 175 CFH
AC-1	1 REQ'D AT 120 CFH	= 120 CFH
CONVECTION OVEN ROTISSERIE OVEN	ROTISSERIE & CONV. OVEN @ 6 CFH EA.	= 12 CFH
TOTAL		928 CFH

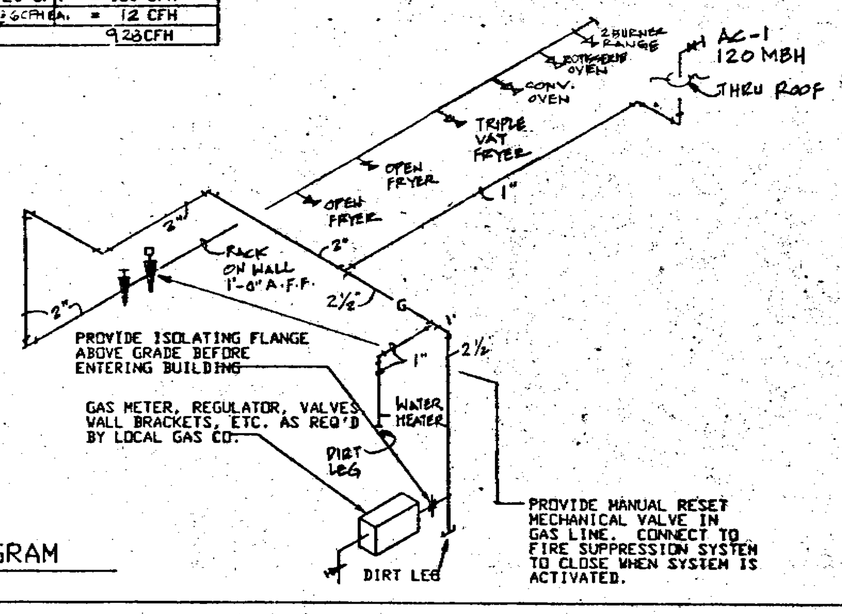

GAS PIPING DIAGRAM

NOT TO SCALE

8/4/96

CODES RULES AND REGULATIONS

ALL MATERIAL AND WORK SHALL BE IN FULL ACCORDANCE WITH THE LASTEST RULES AND REGULATIONS OF THE STATE OF FIRE MARSHALL TITLE 24, UTILITY COMPANY, OSHA AND STATE AND LOCAL GOVERNING AGGENCIES. NOTHING IN THESE PLANS OR SPECIFICATIONS IS TO BE CONSTRUED TO PERMIT WORK NOT CONFIRMING TO THESE STANDARDS.

9672260

36

TITLE 24 COMPLIANCE DOCUMENTATION

CALIFORNIA ENERGY CONSERVATION STANDARDS TITLE 24 FOR NON-RESIDENTIAL BUILDING HAVE BEEN REVIEWED AND THE BUILDING DESIGN DESCRIBED ON THIS DRAWING IS IN SUBSTANTIAL COMPLIANCE.

Copyright 1996
EDWIN BRUCE ASSOCIATES. All designs drawings, and written material appearing herein, are protected and constitute original and unpublished work of the Architect and may not be copied, revised, re-used or disclosed without the written consent of the Architect. Equipment manufactured by others is excluded. Drawings and specifications are instruments of architectural service, and shall remain the property of the Architect. Use is restricted to the site for which they were prepared.

PER CITY COMMENT 6-7-96 1
PER CITY COMMENTS 8-6-96 2

AMCON
Consultants, Inc.
Consulting
Engineers
Reid-Hillview Airport
2660 John Montgomery Drive
San Jose, CA. 95148
Ph. 408/272 8800
Fax 408/272 5645

KFC

K.F.C. JENSEN
CORNER OF BASCOM AVE. AND NAGLEE AVE.
SAN JOSE CALIFORNIA

5-4-96	DATE
	DRAWN
NO SCALE	SCALE
	JOB NO.

P-4

OF

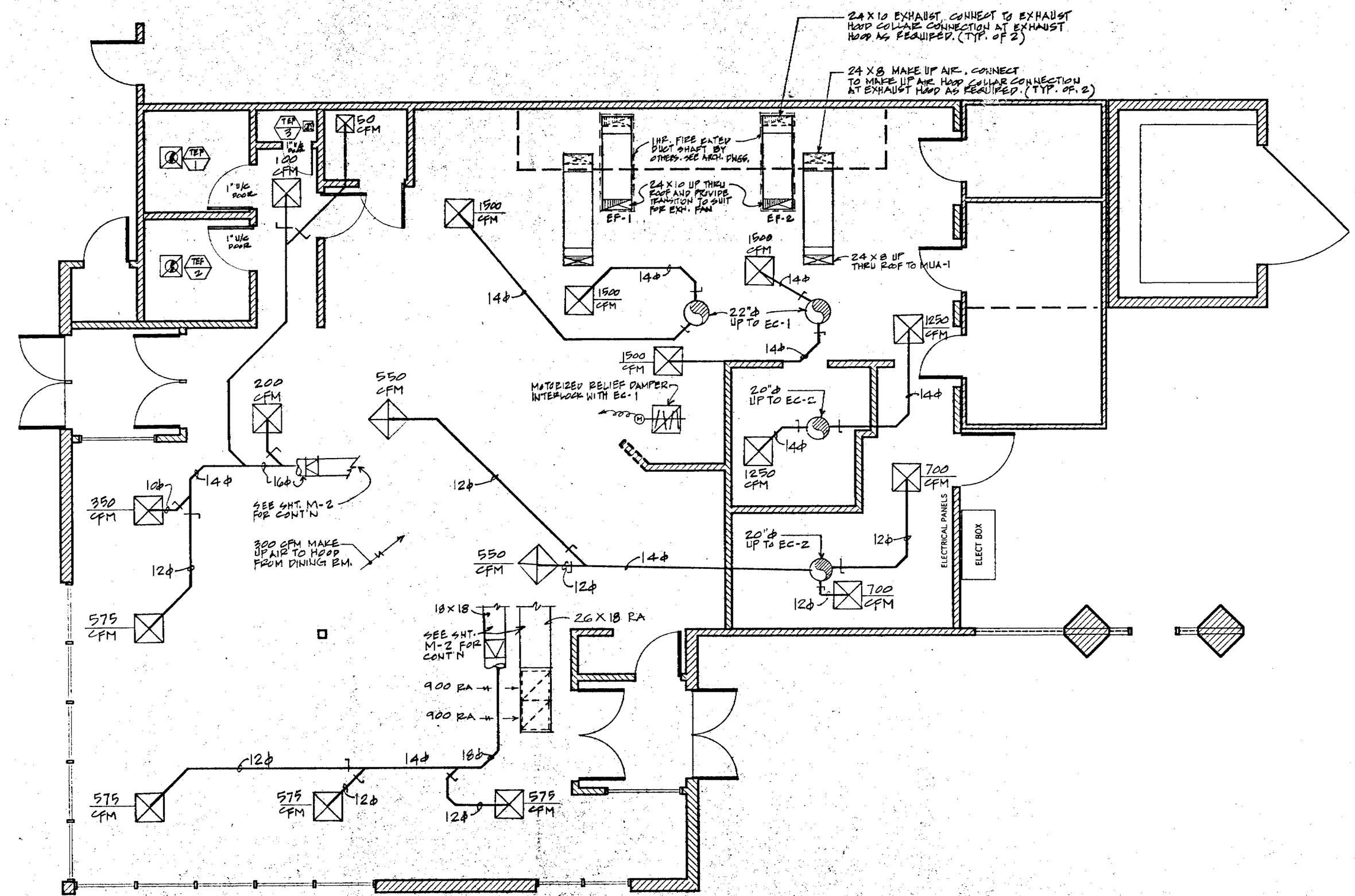

MECHANICAL FLOOR PLAN

SCALE: 1/4" = 1'-0"

CODES RULES AND REGULATIONS

ALL MATERIAL AND WORK SHALL BE IN FULL ACCORDANCE WITH THE LASTEST RULES AND REGULATIONS OF THE STATE OF FIRE MARSHALL TITLE 24, UTILITY COMPANY, OSHA AND STATE AND LOCAL GOVERNING AGGENCIES. NOTHING IN THESE PLANS OR SPECIFICATIONS IS TO BE CONSTRUED TO PERMIT WORK NOT CONFIRMING TO THESE STANDARDS.

9672260

37

TITLE 24 COMPLIANCE DOCUMENTATION

CALIFORNIA ENERGY CONSERVATION STANDARDS TITLE 24 FOR NON-RESIDENTIAL BUILDING HAVE BEEN REVIEWED AND THE BUILDING DESIGN DESCRIBED ON THIS DRAWING IS IN SUBSTANTIAL COMPLIANCE.

Copyright 1996
EDWIN SPICE ASSOCIATES. All designs drawings, and written material appearing herein, are protected and constitute original and unpublished work of the Architect and may not be copied, revised, re-used or disclosed without the written consent of the Architect. Equipment manufactured by others is excluded. Drawings and specifications are instruments of architectural service, and shall remain the property of the Architect. Use is restricted to the site for which they were prepared.

CITY COMMENTS 6-7-96

AMCON Consultants, Inc.

Consulting Engineers

Reid-Hillview Airport
2660 John Montgomery Drive
San Jose, CA. 95148
Ph. 408/272 8800
Fax 408/272 5645

KFC

K.F.C. JENSEN

CORNER OF BASCOM AVE. AND NAGLEE AVE.
SAN JOSE CALIFORNIA

5-4-96	DATE
	DRAWN
1/4" = 1'-0"	SCALE
	JOB NO.

M-1

OF

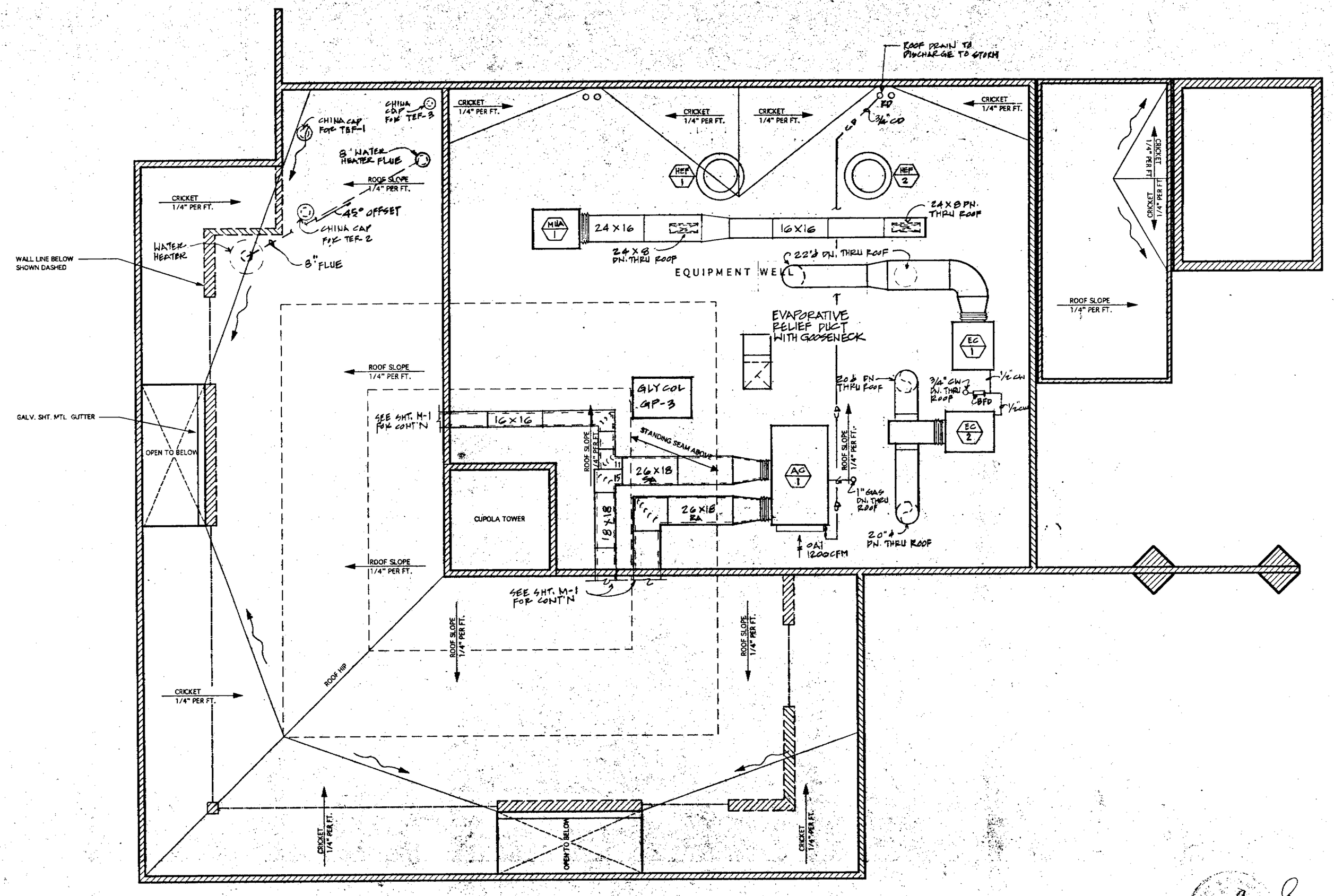

MECHANICAL ROOF PLAN

SCALE: 1/4" = 1'-0"

CODES RULES AND REGULATIONS

ALL MATERIAL AND WORK SHALL BE IN FULL ACCORDANCE WITH THE LASTEST RULES AND REGULATIONS OF THE STATE OF FIRE MARSHALL TITLE 24, UTILITY COMPANY, OSHA AND STATE AND LOCAL GOVERNING AGGENCIES. NOTHING IN THESE PLANS OR SPECIFICATIONS IS TO BE CONSTRUED TO PERMIT WORK NOT CONFIRMING TO THESE STANDARDS.

9672260

TITLE 24 COMPLIANCE DOCUMENTATION

CALIFORNIA ENERGY CONSERVATION STANDARDS TITLE 24 FOR NON-RESIDENTIAL BUILDING HAVE BEEN REVIEWED AND THE BUILDING DESIGN DESCRIBED ON THIS DRAWING IS IN SUBSTANTIAL COMPLIANCE.

38

Copyright 1996
EDWIN BRUCE ASSOCIATES. All designs drawings, and written material appearing herein, are protected and constitute original and unpublished work of the Architect and may not be copied, revised, re-used or disclosed without the written consent of the Architect. Equipment manufactured by others is excluded. Drawings and specifications are instruments of architectural service, and shall remain the property of the Architect. Use is restricted to the site for which they were prepared.

CITY COMMENTS 06-7-96 1

AMCON Consultants, Inc.

Consulting Engineers

Reid-Hillview Airport
2660 John Montgomery Drive
San Jose, CA. 95148
Ph. 408/272 8800
Fax 408/272 5645

KFC

K.F.C. JENSEN

CORNER OF BASCOM AVE. AND NAGLEE AVE.
SAN JOSE
CALIFORNIA

5-4-96	DATE
	DRAWN
1/4" = 1'-0"	SCALE
	JOB NO.

M-2

OF

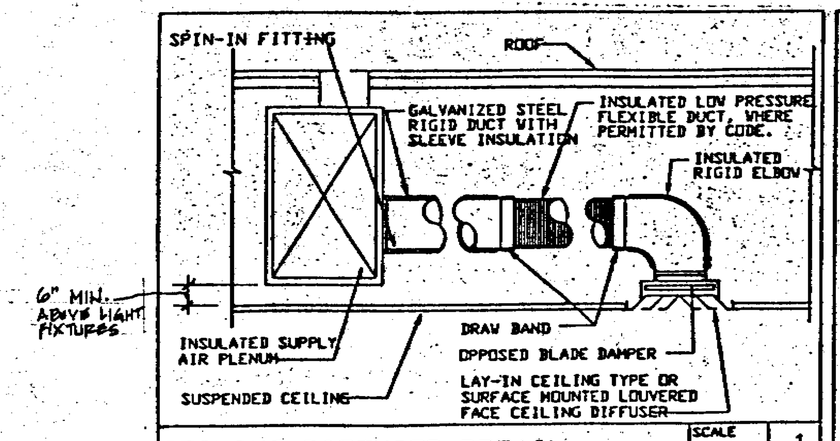

CEILING DIFFUSER DETAIL — SCALE N.T.S. — 1 M103

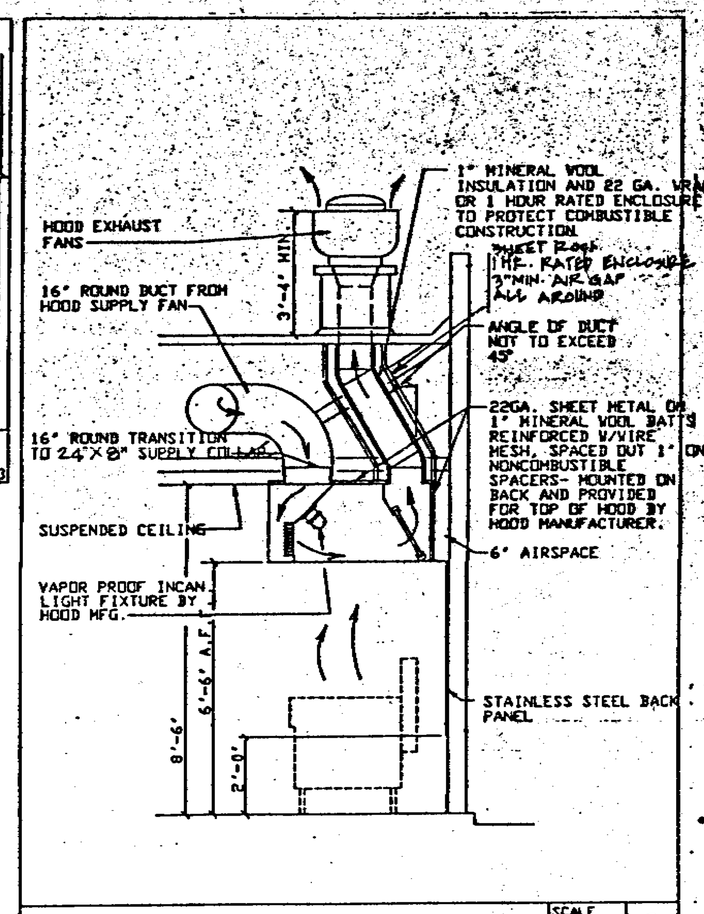

MAIN HOOD EXHAUST DETAIL — SCALE N.T.S. — 2 M101

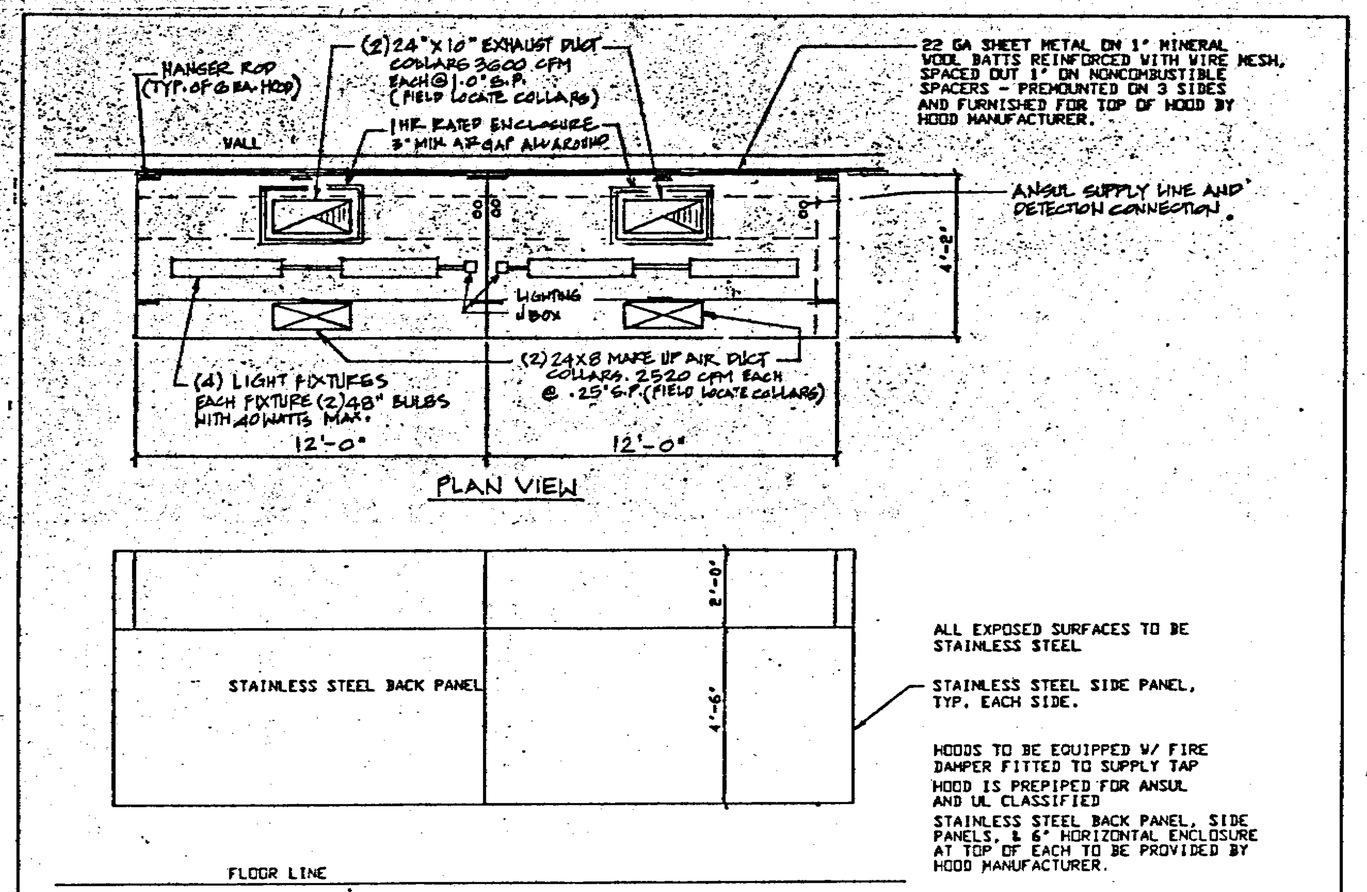

MAIN HOOD DETAIL — SCALE NTS — 3

A/C UNIT SCHEDULE

MARK	MAKE	MODEL	CFM	SP	RPM	HP	ELECT.	MCA	MFS	HEIGHT	WEIGHT	REMARKS
AC-1	TRANE	YCH090	3000	.70	905	1.0	208V/3φ	44	60	4'-1"	1022 #	C/W 7 DAY PROGRAMMABLE T-STAT HORIZONTAL DISCHARGE SLEEPER MOUNTED

PROVIDE SMOKE DETECTOR IN SUPPLY AND RETURN AIR DUCT. WIRE TO SHUT-DOWN HVAC UNIT, MAKE UP AIR UNIT AND EVAPORATIVE COOLER. POWER WIRING BY ELECTRICAL CONT'R.

EVAPORATIVE COOLER SCHEDULE

MARK	MAKE	MODEL	CFM	HP	ELECT.	WEIGHT	REMARKS
EC-1	ESSICK	ECR6600	6,000	3/4	120V/1φ	275 #	C/W POSITION SWITCH, SIDE DISCHARGES, TWO SETS OF EXTRA PAD. UNIT SHALL BE U.L. LISTED, TWO SPEED SWITCH INTERLOCK WITH HEF-1 AND HEF-2.
EC-2	ESSICK	ECR5200	5000	1/2	120V/1φ	200 #	C/W POSITION SWITCH, SIDE DISCHARGES, TWO SETS OF EXTRA PAD. UNIT SHALL BE U.L. LISTED, TWO SPEED SWITCH. INTERLOCK WITH HEF-1 & HEF-2. — MUA-1 CYCLES OFF WHEN EC-2 COME ON.

EXHAUST FAN SCHEDULE

MARK	MAKE	MODEL	CFM	SP	HP	RPM	ELECTRICAL	HEIGHT	WEIGHT	REMARKS
TEF-1 TEF-2	PENN ZEPHYR	ZG	90 50	.125	1/48	1060	115V/1φ	9"	20#	C/W BACKDRAFT DAMPER- 10'-0" FROM ALL OTHER AIR INTAKE
HEF-1 HEF-2	PENN	PX-163-FT	7200	1.0"	1 1/2	1160	208V/3φ	30" UNIT ONLY	380#	INTERLOCK WITH MUA-1

MAKE UP AIR UNIT SCHEDULE

MARK	MAKE	MODEL	CFM	SP	RPM	HP	ELECTRICAL	HEIGHT	WEIGHT	REMARKS
MUA-1	DELHI	SIS-15	5040	1/4"	640	3	208V/3φ	3'-2"	260#	SIDE DISCHARGE WITH W/FACTORY CURB INTERLOCK WITH HEF-1 & HEF-2

BEST AVAILABLE COPY

CODES RULES AND REGULATIONS

ALL MATERIAL AND WORK SHALL BE IN FULL ACCORDANCE WITH THE LASTEST RULES AND REGULATIONS OF THE STATE OF FIRE MARSHALL TITLE 24, UTILITY COMPANY, OSHA AND STATE AND LOCAL GOVERNING AGGENCIES. NOTHING IN THESE PLANS OR SPECIFICATIONS IS TO BE CONSTRUED TO PERMIT WORK NOT CONFIRMING TO THESE STANDARDS.

9672260

TITLE 24 COMPLIANCE DOCUMENTATION

CALIFORNIA ENERGY CONSERVATION STANDARDS TITLE 24 FOR NON-RESIDENTIAL BUILDING HAVE BEEN REVIEWED AND THE BUILDING DESIGN DESCRIBED ON THIS DRAWING IS IN SUBSTANTIAL COMPLIANCE.

39

Copyright 1996
EDWIN BRUCE ASSOCIATES. All designs drawings, and written material appearing herein, are protected and constitute original and unpublished work of the Architect and may not be copied, revised, re-used or disclosed without the written consent of the Architect. Equipment manufactured by others is excluded. Drawings and specifications are instruments of architectural service, and shall remain the property of the Architect. Use is restricted to the site for which they were prepared.

AMCON Consultants, Inc.
Consulting Engineers
Reid-Hillview Airport
2660 John Montgomery Drive
San Jose, CA. 95148
Ph. 408/272 8800
Fax 408/272 5645

KFC

K.F.C. JENSEN
CORNER OF BASCOM AVE. AND NAGLEE AVE.
SAN JOSE CALIFORNIA

5-4-96	DATE
	DRAWN
NO SCALE	SCALE
	JOB NO.

M-3
OF

CERTIFICATE OF COMPLIANCE - Lighting — Part 1 of 2 — LTG-1

PROJECT NAME: KFC JENSEN	DATE: 5.24.96
PROJECT ADDRESS: CORNER OF BASCOM AVE & NAGLEE AVE.	Building Permit #
PRINCIPAL DESIGNER - LIGHTING: M. NEILS ENGINEERING	TELEPHONE: (916) 923-4400
DOCUMENTATION AUTHOR: JIM DEARING	TELEPHONE: "
	Checked by/Date — Enforcement Agency Use

GENERAL INFORMATION

DATE OF PLANS: 5.24.96 — BUILDING CONDITIONED FLOOR AREA: 3053 □

- BUILDING TYPE: ☒ NONRESIDENTIAL ☐ HIGH RISE RESIDENTIAL ☐ HOTEL/MOTEL GUEST ROOM
- PHASE OF CONSTRUCTION: ☒ NEW CONSTRUCTION ☐ ADDITION ☐ ALTERATION
- METHOD OF LIGHTING COMPLIANCE: ☐ COMPLETE BUILDING ☒ AREA CATEGORY ☐ TAILORED ☐ PERFORMANCE

STATEMENT OF COMPLIANCE

This Certificate of Compliance lists the building features and performance specifications needed to comply with Title 24, Parts 1 and 6 of the California Code of Regulations. This certificate applies only to building lighting requirements.

The Principal Lighting Designer hereby certifies that the proposed building design represented in this set of construction documents is consistent with the other compliance forms and worksheets, with the specifications, and with any other calculations submitted with this permit application. The proposed building has been designed to meet the lighting requirements contained in sections 110, 119, 130 through 132, and 146 or 149.

Please check one:

☒ I hereby affirm that I am eligible under the provisions of Division 3 of the Business and Professions Code to sign this document as the person responsible for its preparation; and that I am a civil engineer, electrical engineer or architect.

☐ I affirm that I am eligible under the exemption to Division 3 of the Business and Professions Code by Section 5537.2 of the Business and Professions Code to sign this document as the person responsible for its preparation; and that I am a licensed contractor preparing documents for work that I have contracted to perform.

☐ I affirm that I am eligible under the exemption to Division 3 of the Business and Professions Code by Section ______ of the ______ Code to sign this document as the person responsible for its preparation; and for the following reason: ______

PRINCIPAL LIGHTING DESIGNER - NAME	SIGNATURE	LIC. NO.	DATE
MICHAEL F. NEILS	[signature]	E8707	5.24.96

LIGHTING MANDATORY MEASURES

Indicate location on plans of Note Block for Mandatory Measures: E-1

INSTRUCTIONS TO APPLICANT

For detailed instructions on the use of this and all Energy Efficiency Standards compliance forms, please refer to the Nonresidential Manual published by the California Energy Commission.
LTG-1: Required on plans for all submittals. Part 2 may be incorporated in schedules on plans.
LTG-2: Required for all submittals.
LTG-3: Optional. Use only if lighting control credits are taken.
LTG-4: Optional. Use only if Tailored Method is used. Parts 2 and 3 used only if applicable.

Nonresidential Compliance Form — December 1995

LIGHTING COMPLIANCE SUMMARY — LTG-2

PROJECT NAME: KFC JENSEN — DATE: 5.24.96

ACTUAL LIGHTING POWER

LUMINAIRE NAME	DESCRIPTION	NUMBER OF LUMINAIRES	WATTS PER LUMINAIRE (Including Ballast)	CEC DEFAULT Y	CEC DEFAULT N*	TOTAL WATTS
A	2x4 FLUOR. 2LPS.	17	65.0	☐	☒	1105
B	2x4 FLUOR. 3LPS.	2	99.0	☐	☒	198
C	2x4 FLUOR. 3LP. TANDEM	16	97.5	☐	☒	1560
D	2x4 FLUOR. 3LPS.	2	99.0	☐	☒	198
E	1x4 FLUOR. 2LPS.	2	65.0	☐	☒	130
F	1x4 FLUOR. 3LPS.	1	99.0	☐	☒	99
G	2x4 FLUOR. 2LPS.	1	65.0	☐	☒	65
H	FLUOR. SURFACE 2LP.	2	11.0	☒	☐	22
L	FLUOR. WALL SCONCE	2	17.0	☒	☐	34
				☐	☐	

* If not using the CEC Default value, please provide supporting documentation.

SUBTOTAL FROM THIS PAGE	3411
PLUS SUBTOTAL FROM CONTINUATION PAGE	—
LESS CONTROL CREDIT WATTS (FROM LTG-3)	—
ADJUSTED ACTUAL WATTS	3411

ALLOWED LIGHTING POWER (Choose One Method)

COMPLETE BUILDING METHOD

BUILDING CATEGORY (From Table 2-SSA)	WATTS PER SF	COMPLETE BLDG. AREA	ALLOWED WATTS
N/A			

AREA CATEGORY METHOD

AREA CATEGORY (From Table 2-SSB)	WATTS PER SF	AREA (SF)	ALLOWED WATTS
KITCHEN	2.2	1185	2607
DINING	1.2	1004	1205
CORR'S., RESTROOMS, & SUPPORT AREAS	0.8	834	667
OFFICE	1.6	30	48
TOTALS		3053 (AREA)	4527 (WATTS)

TAILORED OR PERFORMANCE METHOD

☐ TAILORED ☐ PERFORMANCE — TOTAL ALLOWED WATTS (From LTG-4 or from computer run.): —

Nonresidential Compliance Form — December 1995

CERTIFICATE OF COMPLIANCE - Lighting — Part 2 of 2 — LTG-1

PROJECT NAME: KFC JENSEN — DATE: 5.24.96

INSTALLED LIGHTING SCHEDULE

LUMINAIRE NAME (eg. Type-1, Type-2, etc)	TYPE I	TYPE F	TYPE H	LAMPS NO. OF LAMPS	WATTS/LAMP	BALLASTS TYPE S	TYPE E*	TYPE S*	NO. / LUMINAIRE	NOTE TO FIELD
A	☐	☒	☐	2	F32/T8	☐	☒	☐	1	
B	☐	☒	☐	3		☐	☒	☐	2	
C	☐	☒	☐	3		☐	☒	☐	1.5 (TANDEM)	
D	☐	☒	☐	3		☐	☒	☐	2	
E	☐	☒	☐	2		☐	☒	☐	1	
F	☐	☒	☐	3		☐	☒	☐	2	
G	☐	☒	☐	2		☐	☒	☐	1	
H	☐	☒	☐	2	F13/TT	☒	☐	☐	2	
K	☐	☒	☐	2	F9/TT	☒	☐	☐	2	
L	☐	☒	☐	1	F13/TT	☒	☐	☐	1	
	☐	☐	☐			☐	☐	☐		

* Provide Supporting Documentation

MANDATORY AUTOMATIC CONTROLS

CONTROL LOCATION (Room #)	CONTROL IDENTIFICATION	CONTROL TYPE (Auto Time Switch, Exterior, etc.)	SPACE CONTROLLED	NOTE TO FIELD
—	95	MULTI-LEVEL SWITCHING	KITCHEN, DINING	
—	5	SWITCHING	TOILETS, JAN. STOR. RM'S.	

CONTROLS FOR CREDIT

CONTROL LOCATION (Room # or Dwg. #)	CONTROL IDENTIFICATION	CONTROL TYPE (Occupant, Daylight, Dimming, etc.)	LUMINAIRES CONTROLLED TYPE	# OF LUMIN.	NOTE TO FIELD

NOTES TO FIELD - For Building Department Use Only

Nonresidential Compliance Form — December 1995

ABBREVIATIONS

A	AMPERES
A.F.F.	ABOVE FINISHED FLOOR
AL	ALUMINUM
AMP	AMPERE
APPROX	APPROXIMATE
AWG	AMERICAN WIRE GAUGE
BKR	BREAKER
C.	CONDUIT
C.B.	CIRCUIT BREAKER
CL'G	CEILING
C.O.	CONDUIT ONLY, WITH PULL WIRE
(E)	EXISTING
GND	GROUND
HID	HIGH INTENSITY DISCHARGE
Isc	SHORT CIRCUIT AMPERES
KVA	KILO VOLT AMPERE
LF	LINEAR FOOT
MAX.	MAXIMUM
MIN.	MINIMUM
MSB	MAIN SWITCHBOARD
MTD.	MOUNTED
(N)	NEW
NEMA	NATIONAL ELECTRICAL MANUFACTURERS ASSOCIATION
N.I.E.S.	NOT IN ELECTRICAL SECTION OF THESE PLANS AND SPECIFICATIONS
NL	NIGHT LIGHT
PFB	PROVISIONS FOR FUTURE CIRCUIT BREAKER
PH	PHASE
RCPT.	RECEPTACLE
SQ.FT.	SQUARE FOOT
SWBD	MAIN SWITCHBOARD
THW	INSULATED STRAND WIRE
THHN	NYLON JACKETED WIRE
U.G.	UNDERGROUND
UGPS	UNDERGROUND PULL SECTION
V	VOLT
VA	VOLT-AMPERES
W	WIRE, WATT
WP	WEATHER PROTECTED
XFMR	TRANSFORMER
XHHW	CROSS-LINKED POLYETHYLENE WIRE INSULATED
Y	WYE

SYMBOL LIST

- LUMINAIRE - CEILING SURFACE OR PENDANT MOUNTED. (LETTER "a" DENOTES SWITCH FUNCTION, NUMBER "2" DENOTES CIRCUIT NUMBER - TYPICAL FOR ALL LUMINAIRES UNLESS NOTED OTHERWISE)
- LUMINAIRE - WALL MOUNTED.
- LUMINAIRE - RECESSED.
- EMERGENCY EGRESS LIGHTING LUMINAIRE.
- WALL MOUNTED EXIT LUMINAIRE.
- CEILING MOUNTED EXIT LUMINAIRE, ARROW SIGNIFIES DIRECTION, TYPICAL.
- ENCLOSED FLUORESCENT LUMINAIRE - SURFACE MOUNTED
- ENCLOSED FLUORESCENT LUMINAIRE - CEILING LAY-IN, RECESSED.
- ENCLOSED FLUORESCENT LUMINAIRE - CEILING RECESSED
- TANDEM WIRED ENCLOSED FLUORESCENT LUMINAIRE, UL LISTED - CEILING LAY-IN, RECESSED.
- BOLLARD LUMINAIRE, WITH BASE
- ONE-ARM BRACKET LUMINAIRE, WITH POLE AND BASE
- (A 2/40) LUMINAIRE DESIGNATION WITH LAMP QUANTITY AND WATTAGE. SEE LUMINAIRE SCHEDULE
- $ SINGLE POLE TOGGLE SWITCH, +48" A.F.F. - "b" LETTER DENOTES SWITCH FUNCTION - TYPICAL FOR ALL SWITCHES UNLESS NOTED OTHERWISE
- $3 THREE-WAY TOGGLE SWITCH
- PC PHOTO ELECTRIC CELL, FURNISHED BY OTHERS. INSTALLED BY ELECTRICAL TRADE.

ELECTRICAL SHEET INDEX

No. OF SHEETS	DRAWING No.	DRAWING DESCRIPTIONS
1	E-1	ELECTRICAL SHEET INDEX, SYMBOL LIST AND ABBREVIATIONS
2	E-2	ELECTRICAL SITE PLAN
3	E-3	ONE LINE POWER DIAGRAM, "MSB" ELEVATION AND SCHEDULES
4	E-4	FLOOR PLAN - LIGHTING AND FIXTURE SCHEDULE
5	E-5	FLOOR PLAN - POWER AND EQUIPMENT SCHEDULE
6	E-6	CONTROL DIAGRAMS AND NOTES
7	E-7	SPECIFICATION AND DETAILS

SYMBOL LIST (continuation)

- JUNCTION BOX - SIZE AS REQUIRED BY CODE.
- (AC) JUNCTION BOX - SIZE AS REQUIRED BY CODE, MOUNTED AT ACCESSIBLE LOCATION ABOVE T-BAR CEILING.
- QUADPLEX CONVENIENCE OUTLET - NEMA 5-20R
- SPECIAL RECEPTACLE AS SHOWN ON PLANS
- SNOW WINDOW OUTLET - 20 AMP, 125V, 3 W, NEMA 5-20R DUPLEX RECEPTACLE. CEILING MOUNTED.
- TELEPHONE OUTLET - FLUSH IN WALL
- CONDUIT RUN CONCEALED IN CEILINGS OR WALLS. NUMBER OF HASH MARKS DENOTES QUANTITY OF #12 AWG WIRES. CURVED HASH MARK DENOTES QUANTITY OF #12 GREEN GROUND WIRES. CONDUCTORS OTHER THAN #12 ARE INDICATED ON PLANS. NO HASH MARKS DENOTES 2#12 AWG IN 1/2" CONDUIT. TYPICAL FOR ALL CONDUITS.
- CONDUIT RUN UNDERFLOOR OR UNDERGROUND
- CONDUIT HOMERUN TO PANELBOARD, SWITCHBOARD OR TERMINAL CABINET
- CONDUIT TURNED UP
- CONDUIT TURNED DOWN
- PANELBOARD - FLUSH MOUNTED
- TERMINAL CABINET
- SWITCHBOARD, DISTRIBUTION PANEL OR MOTOR CENTER
- EQUIPMENT DISCONNECT SWITCH - EXTERNALLY OPERATED, FUSED WITH FUSE SIZE INDICATED
- EQUIPMENT DISCONNECT SWITCH - EXTERNALLY OPERATED, NON-FUSIBLE
- EQUIPMENT CIRCUIT BREAKER DISCONNECT- EXTERNALLY OPERATED, NON-FUSIBLE
- EQUIPMENT CONTROLLER
- MOTOR
- (AC 1) MECHANICAL EQUIPMENT DESIGNATION - SEE MECHANICAL PLANS
- (123) ROOM NUMBER
- NUMBERED NOTE DESIGNATION - APPLIES TO NUMBERED NOTE ON SAME SHEET
- KITCHEN EQUIPMENT DESIGNATION - APPLIES TO KITCHEN EQUIPMENT SCHEDULE ON SAME SHEET
- (1 / E-1) DRAWING DETAIL DESIGNATION - "1" OR "A" DENOTES PLAN OR DETAIL NUMBER, "E-1" DENOTES SHEET NUMBER

PLAN CHECK APPROVAL
AUG 09 1996
KUTZMANN & ASSOCIATES

BEST AVAILABLE COPY

SYMBOL LIST NOTE:

1. EXISTING ELECTRICAL EQUIPMENT, OUTLETS, AND DEVICES ARE SHOWN THE SAME AS NEW, EXCEPT LIGHTLY, SUCH ELECTRICAL EQUIPMENT, OUTLETS, AND DEVICES ARE TO REMAIN AS IS, UNLESS OTHERWISE NOTED ON PLAN OR SPECIFICATION.
2. ELECTRICAL OUTLET BOXES MOUNTED ON OPPOSITE SIDES OF FIRE-RATED WALLS OR PARTITIONS SHALL BE SEPARATED BY A HORIZONTAL DISTANCE OF 24 INCHES PER UBC SECTION 4304.2, WHETHER SHOWN ON THE PLANS OR NOT.

9673960 40

JUL 09 1996

REGISTERED PROFESSIONAL ENGINEER — MICHAEL F. NEILS — No. 8707 — Exp. 12.31.98 — ELECTRICAL — STATE OF CALIFORNIA

M. Neils Engineering Inc.
10 Fullerton Court, Suite 201
Sacramento, CA 95825
(916) 923-4400
Project No. 96124.21

Copyright 1996 EDWIN BRUCE ASSOCIATES. All designs drawings, and written material appearing herein, are protected and constitute original and unpublished work of the Architect and may not be copied, revised, re-used or disclosed without the written consent of the Architect. Equipment manufactured by others is excluded. Drawings and specifications are instruments of architectural service, and shall remain the property of the Architect. Use is restricted to the site for which they were prepared.

EDWIN BRUCE
Associates
Architects
A.I.A.

1625 The Alameda
Suite 610
San Jose, CA
95126
Ph. 408/995 5701
Fax 408/995 5022

KFC

K.F.C. JENSEN

CORNER OF BASCOM AVE AND NAGLEE AVE
SAN JOSE CALIFORNIA

MAY 24, 1996	DATE
TPZ/JJV	DRAWN
NONE	SCALE
9406	JOB NO.

E-1

1 OF 7

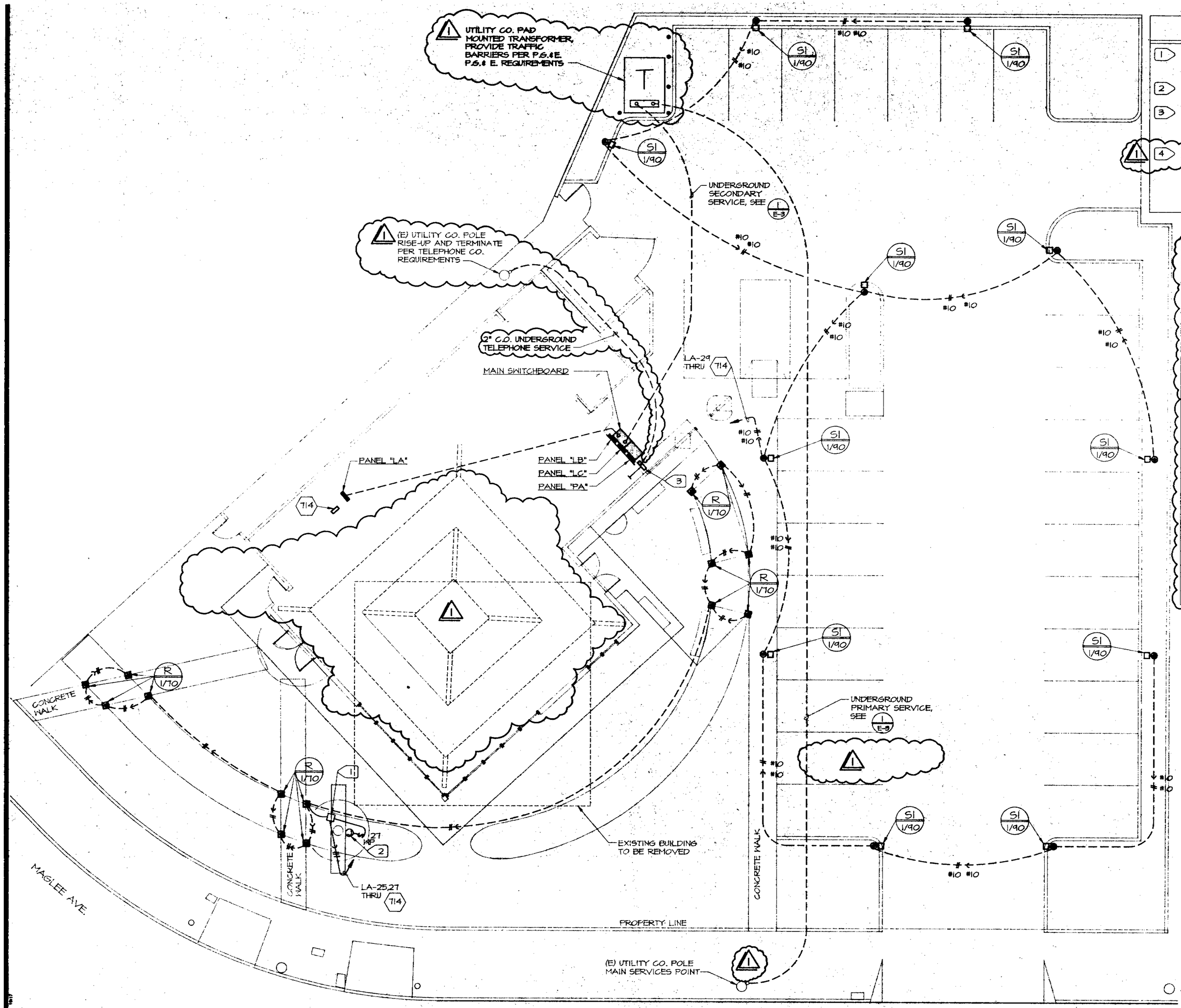

1 E-2 SITE PLAN - ELECTRICAL

SCALE: 1/8" = 1'-0"

NUMBERED NOTES

1. PULL BOX, CHRISTY #N9 WITH #B9X12 EXTENSION, #B9SL BASE AND #N9T LID WITH HOLD DOWN BOLTS, SET TOP OF BOX 2" ABOVE FINISHED GRADE, BACK-FILL WITH CONCRETE.
2. EXISTING MONUMENT SIGN. PROVIDE JUNCTION BOX, DISCONNECT SWITCH AND ALL HARDWARE. CONNECT TO CIRCUIT INDICATED.
3. TELEPHONE TERMINAL CAN, BENNER - NAWMAN #BN36366-W-UL MOUNTED LOW ON WALL. INSTALL RECEPTACLE ON BACKBOARD. PROVIDE 1/2"C-ONE #6 "G" TO UFER GROUND. STUB TWO 1-1/4"C.O. ABOVE CEILING, TERMINATE WITH BUSHINGS.
4. DELETED

UTILITY COMPANIES SERVICE NOTE

CONTRACTOR SHALL INCLUDE IN HIS BID, ALL WORK REQUIRED BY THE UTILITY COMPANIES. ALL WORK REQUIRED FOR UTILITY SERVICES SHALL BE IN ACCORD WITH CONTRACT DOCUMENTS, SPECIFICATIONS, DRAWINGS, AND AS REQUIRED BY THE UTILITY COMPANIES.

COORDINATE REQUIREMENTS WITH:

POWER CO.: PACIFIC GAS & ELECTRIC CO.
308 STOCKTON AVENUE
SAN JOSE, CALIFORNIA 95126

TELEPHONE: (408) 299-1062

CONTACT: J.C. BUTTERFIELD

TELEPHONE CO.: PACIFIC BELL
3475B NORTH FIRST STREET #200
SAN JOSE, CALIFORNIA 95134

TELEPHONE: (408) 493-7114

CONTACT: MR. JEFF McGRATH
PACIFIC BELL ENGINEER

USE EXTREME CAUTION WHEN DIGGING TO AVOID BURIED ELECTRICAL CABLES.
BEFORE DIGGING, CALL:

U.S.A (Underground Service Alert)
800-642-2444

Copyright 1996
EDWIN BRUCE ASSOCIATES. All designs drawings, and written material appearing herein, are protected and constitute original and unpublished work of the Architect and may not be copied, revised, reused or disclosed without the written consent of the Architect. Equipment manufactured by others is excluded. Drawings and specifications are instruments of architectural service, and shall remain the property of the Architect. Use is restricted to the site for which they were prepared.

PLAN CHECK 07-10-96 1

EDWIN BRUCE
Associates
Architects
A.I.A.

1625 The Alameda
Suite 610
San Jose, CA.
95126
Ph. 408/995 5701
Fax 408/995 5022

KFC

K.F.C. JENSEN
CORNER OF BASCOM AVE AND NAGLEE AVE
SAN JOSE CALIFORNIA

MAY 24, 1996	DATE
TPZ/JJV	DRAWN
1/8" = 1'-0"	SCALE
9405	JOB NO.

9672260
41

JUL 09 1996

REGISTERED PROFESSIONAL ENGINEER MICHAEL F. NEILS No. 8707 Exp. 12-31-96 ELECTRICAL STATE OF CALIFORNIA

M. Neils
Engineering Inc.
10 Fullerton Court, Suite 201
Sacramento CA. 95825
(916) 928-4400
Project No. 96124.21

E-2

2 OF 7

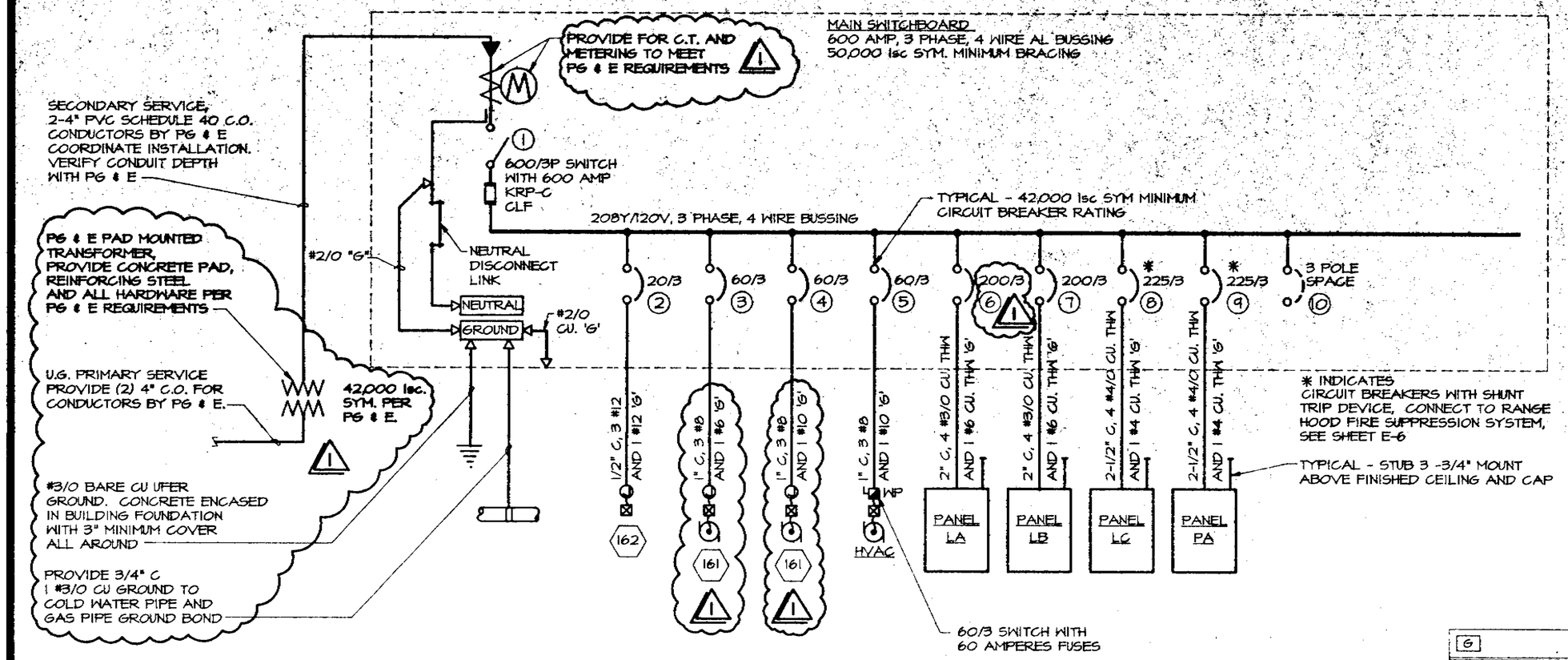

1 / E-3 ONE LINE POWER DIAGRAM - 208/120V, 3 PHASE, 4 WIRE

NO SCALE

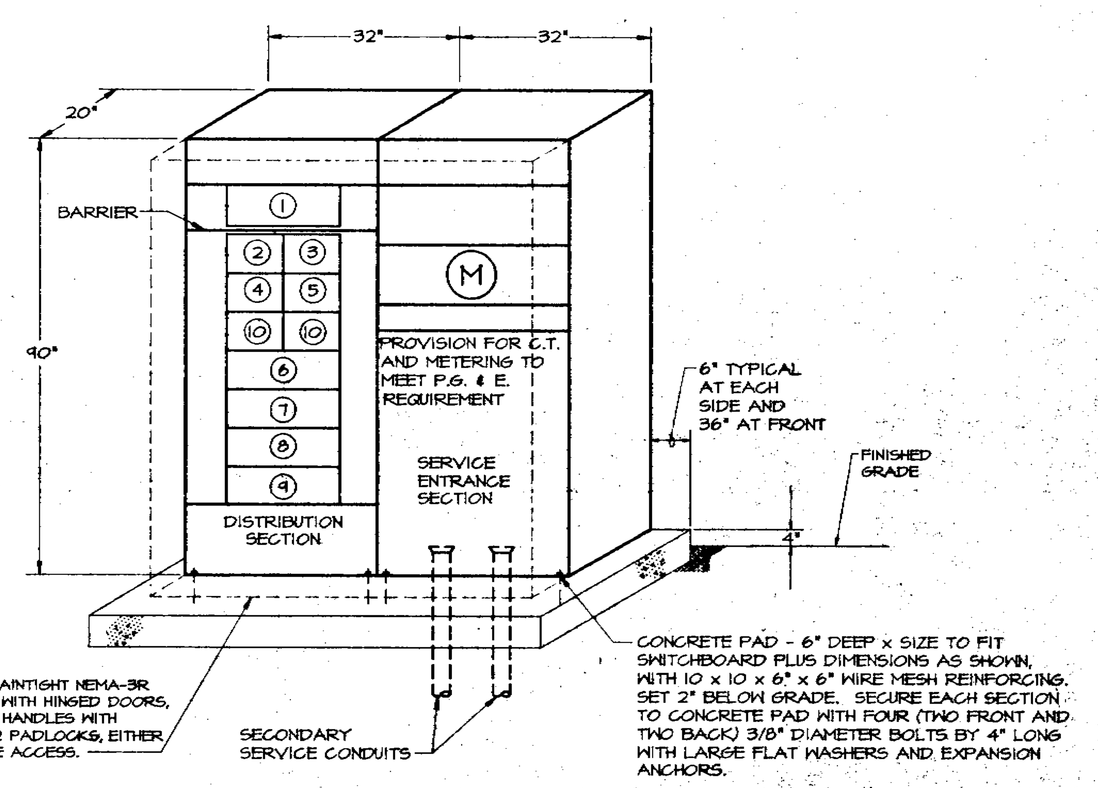

2 / E-3 MAIN SWITCHBOARD ELEVATION

NO SCALE

PANEL "LA" SCHEDULE

POWER SOURCE: MSB — LOCATION: OFFICE

TYPE NQB | BUS 225A | BOTTOM MAIN LUGS | VOLTAGE 208Y/120 VOLT, 3 PHASE, 4 WIRES | MOUNTING FLUSH | REMARKS: 42,000 Isc SYM. MIN.

LOAD SERVED	kVA	CB	CT	A	B	C	CT	CB	kVA	LOAD SERVED
LIGHTING	1.4	20/1	1				2	20/1	0.7	ITEM 140
LIGHTING	1.3	20/1	3				4	20/1	0.4	ITEM 140A
LIGHTING AND CBT	1.0	20/1	5				6	20/1	1.3	RECEPTACLES (7)
EXIT/EGRESS	0.5	20/1	7				8	20/1	0.3	ITEM 711,718,714
ITEM 714	0.5	20/1	9				10	20/1	0.2	RECEPTACLES
SHOW WINDOW	1.8	20/1	11				12	20/1	0.4	RECEPTACLES
SIGN CIRCUIT	1.2	20/1	13				14	20/1	0.4	RECEPTACLES
SIGN CIRCUIT	1.2	20/1	15				16	20/1	0.4	RECEPTACLES
ITEM 120	0.9	20/1	17				18	20/1	-	SPARE
ITEM 120A	0.9	20/1	19				20	20/1	0.5	FIRE SUPPRESSION SYSTEM
RECEPTACLES	0.5	20/1	21				22	20/2	1.2	ITEM 156
EXTERIOR LIGHTING	1.1	20/1	23				24	2	1.2	
BOLLARD LIGHTING	1.0	20/1	25				26	20/2	1.2	ITEM 156
MONUMENT SIGN	1.5	20/1	27				28	2	1.2	
SITE LIGHTING	1.2	15	29				30	30/2	2.1	ITEM 157
	1.2	2	31				32	2	2.1	
SPACE	-	PPB	33				34	30/1	2.4	ITEM 158
SPACE	-	PPB	35				36	PPB	-	SPACE
SPACE	-	PPB	37				38	PPB	-	SPACE
SPACE	-	PPB	39				40	PPB	-	SPACE
SPACE	-	PPB	41				42	PPB	-	SPACE

NOTES/:

PHASE A = 11.4 kVA
PHASE B = 10.8 kVA
PHASE C = 11.0 kVA

TOTAL = 33.2 kVA
TOTAL = 92.2 Amperes

PANEL "PA" SCHEDULE

POWER SOURCE: MSB — LOCATION: STORAGE

TYPE NQB | BUS 225A | BOTTOM MAIN LUGS | VOLTAGE 208Y/120 VOLT, 3 PHASE, 4 WIRES | MOUNTING FLUSH | REMARKS: 42,000 Isc SYM. MIN.

LOAD SERVED	kVA	CB	CT	A	B	C	CT	CB	kVA	LOAD SERVED
TEL. CO. CIRCUIT	0.5	20/1	1				2	20/1	0.5	E.C. PUMP
RECEPTACLES	0.4	20/1	3				4	30/1	1.7	E.C. FAN 3/4HP
ITEM 303A	1.2	20/1	5				6	30/1	2.3	ITEM 303
ITEM 303A	1.2	20/1	7				8	15	0.8	
ITEM 304A	1.2	20/1	9				10		0.8	ITEM 224
ITEM 210	1.0	20/1	11				12	3	0.8	
(2) ITEM 207	1.2	20/1	13				14	30	1.3	
ITEM 202, 206, 207	0.7	20/1	15				16		1.3	MAKE-UP AIR UNIT
SPARE	-	20/1	17				18	3	1.3	
ITEM 303 COOLER	2.2	20	19				20	50	4.7	
	2.2		21				22		4.7	ITEM 222
	2.2	3	23				24	3	4.7	
ITEM 304 FREEZER	2.2	20	25				26	PPB	-	SPACE
	2.2		27				28	PPB	-	SPACE
	2.2	3	29				30	PPB	-	SPACE
SPACE	-	PPB	31				32	PPB	-	SPACE
SPACE	-	PPB	33				34	PPB	-	SPACE
SPACE	-	PPB	35				36	PPB	-	SPACE
SPACE	-	PPB	37				38	PPB	-	SPACE
SPACE	-	PPB	39				40	PPB	-	SPACE
SPACE	-	PPB	41				42	PPB	-	SPACE

NOTES/:

PHASE A = 14.6 kVA
PHASE B = 15.2 kVA
PHASE C = 15.7 kVA

TOTAL = 45.5 kVA
TOTAL = 128.4 Amperes

PANEL "LB" SCHEDULE

POWER SOURCE: MSB — LOCATION: STORAGE

TYPE NQB | BUS 225A | BOTTOM MAIN LUGS | VOLTAGE 208Y/120 VOLT, 3 PHASE, 4 WIRES | MOUNTING FLUSH | REMARKS: 42,000 Isc SYM. MIN.

LOAD SERVED	kVA	CB	CT	A	B	C	CT	CB	kVA	LOAD SERVED
ITEM 160, 700	0.8	20/1	1				2	PPB	-	SPACE
ITEM 101	1.2	20/1	3				4	PPB	-	SPACE
ITEM 101	1.2	20/1	5				6	PPB	-	SPACE
ITEM 200	1.8	20/1	7				8	20/1	1.6	ITEM 123
ITEM 224	1.6	20/	9				10	20/1	1.6	ITEM 151
	1.6	2	11				12	20/1	1.0	ITEM 136
ITEM 126	1.8	20/1	13				14	20/1	1.0	ITEM 114
ITEM 405	0.9	20/1	15				16	20/1	1.0	ITEM 114
ITEM 404	0.9	20/1	17				18	20/	1.2	ITEM 125
ITEM 300	1.1	20/1	19				20	2	1.2	
ITEM 406, 407	1.1	20/1	21				22	20/1	1.8	ITEM 141
ITEM 407	0.5	20/1	23				24	20/1	0.8	ITEM 113
ITEM 124	2.0	30/1	25				26	30/	1.0	
ITEM 124	2.0	30/1	27				28		1.0	2-HEF 1HP EA.
ITEM 124	2.0	30/1	29				30	3	1.0	
ITEM 141	1.8	20/1	31				32	PPB	-	SPACE
ITEM 141	1.8	20/1	33				34	PPB	-	SPACE
SPACE	-	PPB	35				36	PPB	-	SPACE
SPACE	-	PPB	37				38	PPB	-	SPACE
SPACE	-	PPB	39				40	PPB	-	SPACE
SPACE	-	PPB	41				42	PPB	-	SPACE

NOTES/:

PHASE A = 14.4 kVA
PHASE B = 14.3 kVA
PHASE C = 10.5 kVA

TOTAL = 34.2 kVA
TOTAL = 106.9 Amperes

LOAD CALCULATIONS

LOAD CALCULATIONS - RESTAURANT - 3053 SQUARE FEET:

LIGHTING AT 2.0 VA/SQUARE FEET + 6106.0 VA x 125%	=	7633.0 VA
EXTERIOR LIGHTING = 4500.0 VA x 125%	=	5625.0 VA
SHOW WINDOW = 56.0 LF x 200.0 VA/LF	=	11200.0 VA
ILLUMINATED SIGNS - 2 AT 1.2 KVA, AND 1 AT 1.5 KVA	=	3900.0 VA
RECEPTACLES - 17 AT 180.0 VA EACH	=	3060.0 VA
HAND DRYERS - AT 2.4 KVA EACH	=	4800.0 VA
HVAC UNIT - 208 VOLT, 3 PHASE	=	13342.0 VA
COMPRESSOR = 27.0 RLA		
EVAPORATIVE FAN = 3.4 FLA		
CONDENSER FAN = 3.4 FLA		
CIRCUIT BREAKER = 0.4 FLA		
EVAPORATIVE COOLER "EC-1" - 3/4 HP, 120 VOLT	=	1656.0 VA
EVAPORATIVE COOLER "EC-2" - 1/2 HP, 120 VOLT	=	1176.0 VA
CEILING EXHAUST FANS - 2 AT 50.0 VA EACH	=	100.0 VA
MAKE-UP-AIR UNIT - 3 HP, 208 VOLT, 3 PHASE	=	3616.0 VA
HOOD EXHAUST FAN - 2 AT 1-1/2 HP, 208 VOLT, 3 PHASE, EACH	=	3900.0 VA
KITCHEN EQUIPMENT - 148600.0 VA CONNECTED, AT 65% DEMAND (NEC 220-20)	=	96710.0 VA
LARGEST MOTOR - 27.0 RLA AT 25%	=	2430.0 VA
TOTAL LOAD	=	157456.0 VA

157456.0 VA AT 208/120 VOLT, 3 PHASE, 4 WIRE = 437.4 AMPERES

PANEL "LC" SCHEDULE

POWER SOURCE: MSB — LOCATION: STORAGE

TYPE NQB | BUS 225A | BOTTOM MAIN LUGS | VOLTAGE 208Y/120 VOLT, 3 PHASE, 4 WIRES | MOUNTING FLUSH | REMARKS: 42,000 Isc SYM. MIN.

LOAD SERVED	kVA	CB	CT	A	B	C	CT	CB	kVA	LOAD SERVED
ITEM 220	3.5	40	1				2	40	3.5	
	3.5		3				4		3.5	ITEM 220
	3.5	3	5				6	3	3.5	
ITEM 220	3.5	40	7				8	40	3.5	
	3.5		9				10		3.5	ITEM 220
	3.5	3	11				12	3	3.5	
ITEM 220	3.5	40	13				14	PPB	-	SPACE
	3.5		15				16	PPB	-	SPACE
	3.5	3	17				18	PPB	-	SPACE
SPACE	-	PPB	19				20	PPB	-	SPACE
SPACE	-	PPB	21				22	PPB	-	SPACE
SPACE	-	PPB	23				24	PPB	-	SPACE
SPACE	-	PPB	25				26	PPB	-	SPACE
SPACE	-	PPB	27				28	PPB	-	SPACE
SPACE	-	PPB	29				30	PPB	-	SPACE

NOTES/:

PHASE A = 17.5 kVA
PHASE B = 17.5 kVA
PHASE C = 17.5 kVA

TOTAL = 52.5 kVA
TOTAL = 145.8 Amperes

JUL 09 1996

REGISTERED PROFESSIONAL ENGINEER MICHAEL F. NELLS No. 8707 Exp. 12-31-96 ELECTRICAL STATE OF CALIFORNIA

M. Nells Engineering Inc.
10 Fullerton Court, Suite 201
Sacramento CA. 95826
(916) 923-6100
Project No. 96124.21

Copyright 1995
EDWIN BRUCE ASSOCIATES. All designs drawings, and written material appearing herein, are protected and constitute original and unpublished work of the Architect and may not be copied, revised, reused or disclosed without the written consent of the Architect. Equipment manufactured by others is excluded. Drawings and specifications are instruments of architectural service, and shall remain the property of the Architect. Use is restricted to the site for which they were prepared.

PLAN CHECK 07-10-96 1

EDWIN BRUCE Associates A.I.A.
1625 The Alameda
Suite 610
San Jose, CA.
95126
Ph. 408/995 5701
Fax 408/995 5022

KFC

K.F.C. JENSEN
CORNER OF BASCOM AVE AND NAGLEE AVE
SAN JOSE CALIFORNIA

9672260
42

MAY 24, 1996	DATE
TPZ/JJV	DRAWN
NONE	SCALE
9405	JOB NO.

E-3

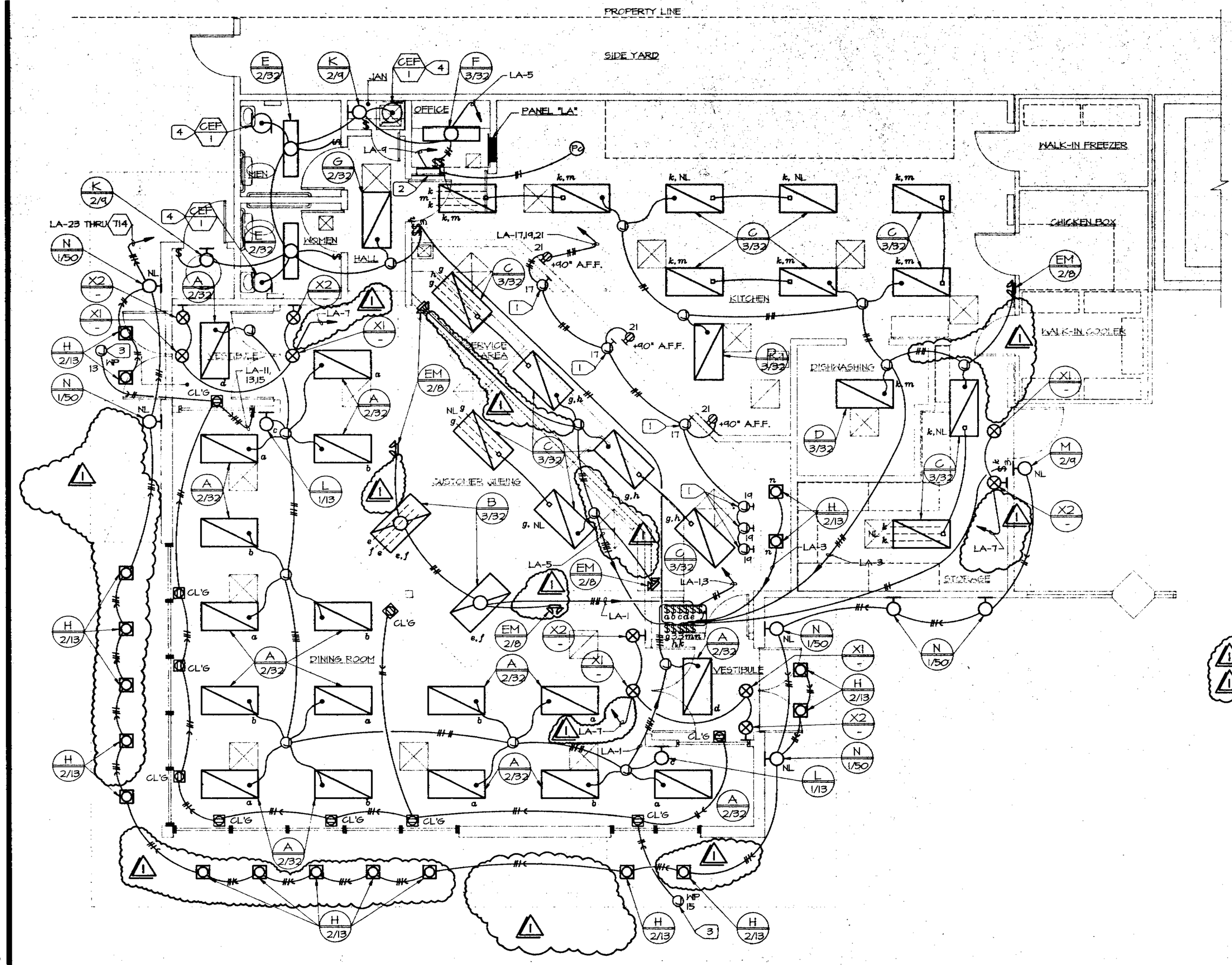

1 E-4 FLOOR PLAN - LIGHTING

SCALE: 1/4" = 1'-0"

NUMBERED NOTES

1. ILLUMINATED MENU BOARD, VALANCE MOUNTED.
2. LIGHTING AND HVAC CONTROL PANEL, ITEM 714, SEE SHEET E-5
3. ILLUMINATED SIGN MOUNTED ON TOP OF SOFFIT, SEE ARCHITECTURAL DRAWINGS, CONNECT THROUGH ITEM 714.
4. SWITCH CEILING EXHAUST FAN (CEF) WITH LIGHTS.
5. DELETED

LUMINAIRE SCHEDULE

TYPE	MANUFACTURER CATALOG NO.	VOLTAGE DESCRIPTION	LAMPS QTY	LAMPS TYPE	MOUNTING	REMARK NOTE No.
A 2/32	LITHONIA 26T-232-PCI-120-ELB-SSR-HTC-PXS1836	120 VOLT 2X4 WITH PARACUBE LOUVER	2	F032T8/35K	RECESSED T-BAR CL'G	1
B 3/32	LITHONIA 2SPF-332-PCI-120-ELB	120 VOLT 2X4 WITH PARACUBE LOUVER	3	F032T8/35K	RECESSED GYP. BD. CL'G	1
C 3/32	LITHONIA 26T-332-AI2(125)-120-ELB-HTC-LTCII-PXS1846	120 VOLT 2X4 WITH AI2 0.125" LENS	3	F032T8/35K	RECESSED T-BAR CL'G	1
D 3/32	LITHONIA 26T-332-AI2(125)-120-ELB-HTC-PXS1846	120 VOLT 2X4 WITH AI2 0.125" LENS	3	F032T8/35K	RECESSED T-BAR CL'G	1
E 2/32	LITHONIA 5PF-232-AI2(125)-120-ELB	120 VOLT 1X4 WITH AI2 0.125" LENS	2	F032T8/35K	RECESSED GYP. BD. CL'G	1
F 3/32	LITHONIA AN-332-AR-120-ELB	120 VOLT 1X4 WRAP AROUND LENS	3	F032T8/35K	CEILING	1
G 2/32	LITHONIA 26T-232-AI2(125)-120-ELB-SSR-HTC-PXS1836	120 VOLT 2X4 WITH AI2 0.125" LENS	2	F032T8/35K	RECESSED T-BAR CL'G	1
H 2/13	LITHONIA LGF-2/13TT-TRW-FLL-120	120 VOLT FLUORESCENT 6" DIA. DOWN LIGHT	2	F13/TT/35K	RECESSED GYP. BD. CL'G	
K 2/9	LITHONIA VR3-2/9TT-120-SSB-LPI	120 VOLT FLUORESCENT LENSED LUMINAIRE	2	F9/TT/35K	WALL AT +7'-0" A.F.F.	
L 1/13	FLUORESCENT WALL SCONCE LUMINAIRE, FURNISHED BY OTHERS, INSTALLED AND CONNECTED BY ELECTRICAL TRADE. PROVIDE 1-F13/TT/35K LAMP AND ALL HARDWARE TO COMPLETE INSTALLATION.					
M 2/9	LITHONIA VR3-2/9TT-120-SSB-LPI	120 VOLT FLUORESCENT LENSED LUMINAIRE	2	F9/TT/35K	WALL AT +7'-0" A.F.F.	
N 1/50	G.W. COLE HPS-33350E-HPF-WHT	120 VOLT HID WALL LUMINAIRE	1	LU50/CLEAR	WALL AT +8'-6" A.F.F.	
P	DELETED					
Q	DELETED					
R 1/10	LITHONIA TFS-505-120-TFSUV	120 VOLT GROUND MOUNTED HID BOLLARD	1	MXR70/C/N/MED	BOLLARD, SEE DETAIL 2/E-7	
S1 1/90	LITHONIA KT1-90L-208-SP04-6L-DWH-SSS-18-(125)-DM19-T20-DWH	208 VOLT SQUARE POLE	1	90W50X90	POLE TOP, SEE DETAIL 1/E-7	
S2 1/90	LITHONIA KT1-90L-208-SP04-6L-HHS-DWH-SSS-18-(125) DM19-T20-DWH	208 VOLT SQUARE POLE	1	90W50X90	POLE TOP, SEE DETAIL 1/E-7	
EM 2/8	LITHONIA ELR2-N-H-120	120 VOLT EMERGENCY LIGHT	FURNISHED WITH LUMINAIRE		RECESSED T-BAR CL'G	2
X1 -	LITHONIA ELE-S-W-1-G-120-ELN	120 VOLT EXIT LIGHT	FURNISHED WITH EXIT LIGHT		CEILING	
X2 -	LITHONIA TELE-S-W-1-G-120	120 VOLT EXIT LIGHT WITHIN 6" OF DOOR JAM	FURNISHED WITH EXIT LIGHT		WALL AT +6" A.F.F.	

LUMINAIRE SCHEDULE NOTES:

1. PROVIDE LUMINAIRES WITH T-8 LAMP(S) AND ELECTRONIC BALLAST(S).
2. EMERGENCY BATTERY PACK - "EM"
3. MULTI LEVEL SWITCH ALL LUMINAIRES AS SHOWN BY SUBSCRIPT LETTERS TO COMPLY WITH REQUIREMENTS OF TITLE 24.
4. EXACT LOCATION OF ALL LUMINAIRES SHALL BE COORDINATED WITH ARCHITECTURAL REFLECTED CEILING PLAN. ANY DISCREPANCIES SHALL BE COORDINATED WITH THE ARCHITECT TO DETERMINATE EXACT LOCATION OF LUMINAIRES.
5. DELETED
6. DELETED

9672260

43

REGISTERED PROFESSIONAL ENGINEER MICHAEL F. NEILS No. 8707 Exp. 12-31-96 ELECTRICAL STATE OF CALIFORNIA

JUL 9 1996

M. Neils Engineering Inc.
10 Pollerton Court, Suite 201
Sacramento CA. 95828
(916) 823-4400

Project No. 96124.21

Copyright 1988
EDWIN BRUCE ASSOCIATES. All designs drawings, and written material appearing herein, are protected and constitute original and unpublished work of the Architect and may not be copied, revised, re-used or disclosed without the written consent of the Architect. Equipment manufactured by others is excluded. Drawings and specifications are instruments of architectural service, and shall remain the property of the Architect. Use is restricted to the site for which they were prepared.

PLAN CHECK 07-10-96 1

EDWIN BRUCE Associates Architects A.I.A.
1625 The Alameda
Suite 610
San Jose, CA.
95126
Ph. 408/995 5701
Fax 408/995 5022

KFC

K.F.C. JENSEN

CORNER OF BASCOM AVE AND NAGLEE AVE
SAN JOSE CALIFORNIA

MAY 24, 1996	DATE
TPZ/JJV	DRAWN
1/4" = 1'-0"	SCALE
9405	JOB NO.

E-4

4 OF 7

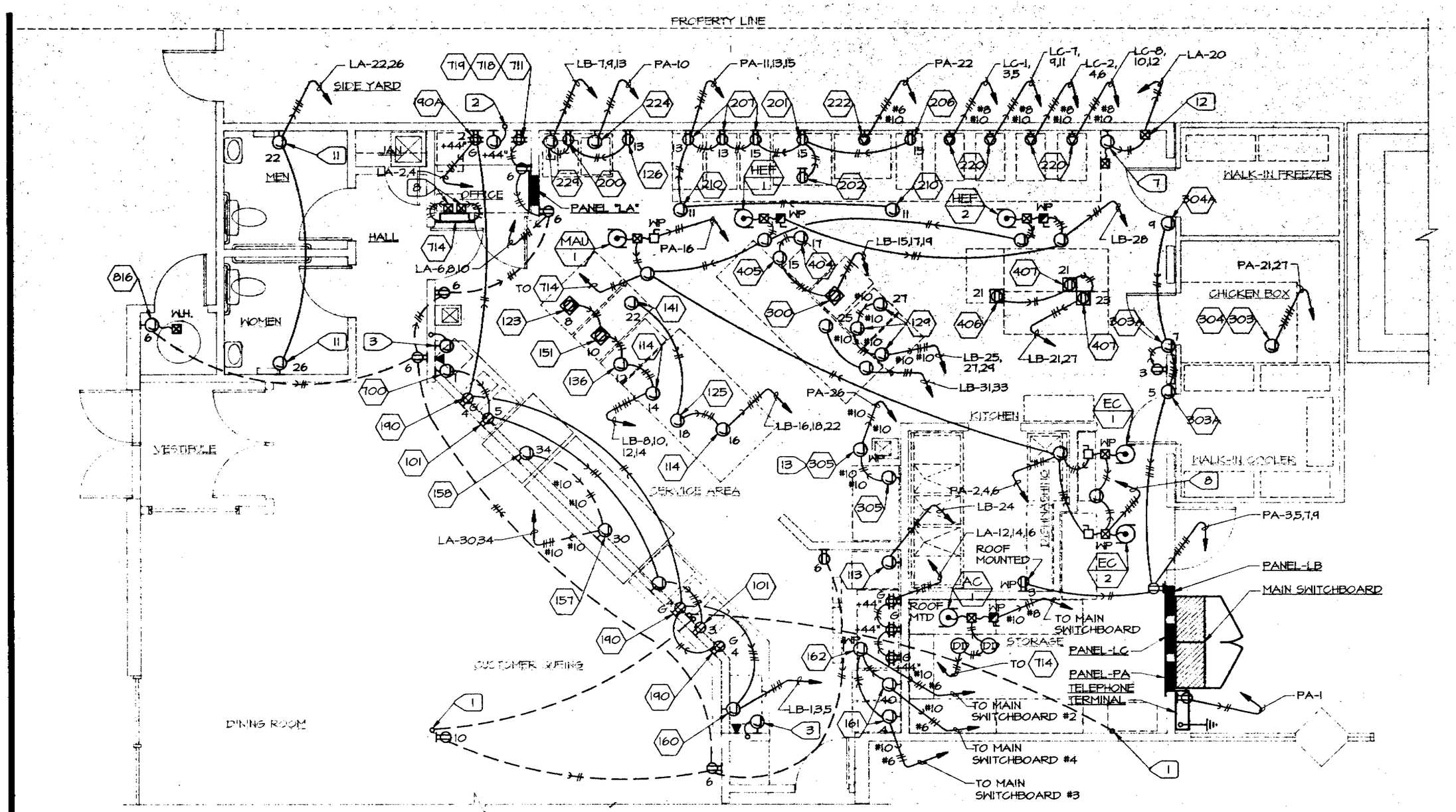

1 / E-5 PLOOR PLAN - POWER

SCALE: 1/4" = 1'-0"

NUMBERED NOTES

1. 4" PVC SCHEDULE 40 CONDUIT WITH LONG RADIUS ELLS. STUB UP A.F.F. AND TERMINATE WITH END BELLS. CONDUIT FOR SODA SYSTEM LINES, COORDINATE INSTALLATION AS REQUIRED.
2. REGISTER COAXIAL CABLE OUTLET, 4-11/16" SQUARE X 2-1/8" DEEP OUTLET BOX WITH 2-DEVICE RING AND PLATE AT +48". RUN 2 - 1" MT TO ACCESSIBLE CEILING SPACE ABOVE T-BAR CEILING AND TERMINATE WITH BUSHINGS.
3. REGISTER COAXIAL CABLE OUTLET, 4-11/16" SQUARE X 2-1/8" DEEP OUTLET BOX WITH 2-DEVICE RING AND PLATE AT +18". RUN 2 - 1" MT TO ACCESSIBLE CEILING SPACE ABOVE T-BAR CEILING AND TERMINATE WITH BUSHINGS.
4. HOOD EXHAUST FAN, CONNECT TO 714 AND HOOD FIRE SUPPRESSION SYSTEM.
5. INTERCONNECT EQUIPMENT FOR SHUT-DOWN BY HVAC SMOKE DETECTOR AND/OR RANGE HOOD FIRE SUPPRESSION SYSTEM.
6. HVAC SMOKE DETECTOR, N.I.E.S., CONNECT AS REQUIRED. INTERLOCK WITH HVAC UNIT, MAKE-UP-AIR UNIT, AND EVAPORATIVE COOLER, SEE MECHANICAL PLANS.
7. GAS PIPING SOLENOID VALVE, N.I.E.S., CONNECT FOR SHUT-DOWN WITH RANGE HOOD FIRE SUPPRESSION SYSTEM.
8. EVAPORATIVE COOLER 5 - POSITION SWITCH, N.I.E.S., INSTALL AND CONNECT AS REQUIRED. CONNECT THROUGH RELAY IN ITEM 714.
9. DAMPER MOTOR, N.I.E.S., CONNECT AS REQUIRED, SEE MECHANICAL PLANS.
10. AIR CONDITIONING UNIT, ROOF MOUNTED. COORDINATE INSTALLATION WITH HVAC TRADE.
11. HAND DRYER, 2288.0 W, 11.0 AMPS, 208 V SINGLE PHASE, WALL MOUNTED AT + 48" A.F.F.
12. FIRE SUPPRESSION SYSTEM, VERIFY EXACT LOCATION AND CONNECT.
13. ICE MACHINE COMPRESSOR ON ROOF, INTERCONNECT WITH UNIT IN KITCHEN.

FOOD SERVICE EQUIPMENT SCHEDULE (continuation)

ITEM No.	QTY	DESCRIPTION	HP	VOLTS/ PHASE	AMPS	kVA	*OUTLET MOUNTING HEIGHT / REMARKS
407	2	DOUBLE BREADER WITH SIFTER	1/8	120	4.4	0.5	
100	1	SAFE (HI - SECURITY)	-	120	0.8	0.1	
107	1	VIDEO TRAINING UNIT	-	120	4.2	0.5	
711	1	ELECTRONIC SECURITY SYSTEM	-	120	0.8	0.1	
714	1	HVAC/LIGHT CONTROL PANEL	-	120	0.8	0.1	
718	1	BACKGROUND MUSIC SYSTEM	-	120	0.8	0.1	
719	1	SMOKE ALARM SYSTEM	-	120	0.8	0.1	
816	1	WATER HEATER 80 GAL.	-	120	0.8	0.1	

KITCHEN EQUIPMENT SCHEDULE NOTES

1. ALL OUTLETS MUST BE LOCATED AT ACCESSIBLE AREA. COORDINATE EXACT LOCATIONS AND REQUIREMENTS OF ALL KITCHEN EQUIPMENT WITH KITCHEN CONSULTANT DRAWINGS AND CONTRACTOR BEFORE START OF ANY INSTALLATIONS. PROVIDE A ROUGH-IN PLAN OF EQUIPMENT OUTLET LOCATIONS AS PART OF THE SUBMITTALS.

FOOD SERVICE EQUIPMENT SCHEDULE

ITEM No.	QTY	DESCRIPTION	HP	VOLTS/ PHASE	AMPS	kVA	*OUTLET MOUNTING HEIGHT / REMARKS
101	2	SODA SYSTEM	-	120	9.8	1.2	
113	1	REFRIGERATED DISPLAY	1/3	120	6.8	0.8	
114	2	HEATED DRAWER	-	120	8.5	1.0	
123	1	40" ADD ON	-	120	13.7	1.6	
125	1	8 FT. HEATED DISPLAY UNIT	-	208/1	20.0	2.4	
126	1	COFFEE BREWER	-	120	15.0	1.8	
129	3	WARMING CABINET	-	120	17.5	2.0	
136	1	FRIES TABLE HEAT LAMP	-	120	8.0	1.0	
141	1	MICROWAVE OVEN	-	120	14.6	1.75	
151	1	SANDWICH CONDIMENT TABLE	-	120	13.7	1.6	
157	1	REAR POST SERVICE HOT FOOD	-	208/1	20.0	4.2	
158	1	REAR POST SERVICE DELI	-	120	20.0	2.4	
160	1	RECESSED TOPING BAR	-	120	5.8	0.7	
161	2	SOFT SERVE FREEZER	-	208/3	25.0	9.0	
162	-	GLUCOL-PAK REFRIGERATION UNIT	-	208/3	13.7	4.9	
190	3	CASH REGISTER (SLAVE)	-	120	0.8	0/1	
190A	1	CASH REGISTER (MSTR.)	-	120	0.8	0.1	
200	1	CORN COOKER	-	120	14.6	1.75	
201	1	CONVECTION OVEN	-	120	8.0	1.0	
206	1	2 BURNER RANGE	-	120	0.8	0.1	
207	3	OPEN FRYER WITH COMPUTER	-	120	5.0	0.6	
210	2	12" EXHAUST HOOD TYPE I	-	120	4.0	0.5	
215	1	SHORTENING FILTER	-	120	15.0	1.8	
220	5	6HD COLLECTRAMATIC	-	208/3	29.2	10.5	
222	1	ROTISSERIE OVEN	-	208/3	39.4	14.2	
224	1	VEGETABLE STEAMER	-	208/3	6.9	2.5	
226	1	ROTISSERIE OVEN	-	208/3	27.7	10.0	
229	1	HOT WATER MACHINE	-	208/3	15.0	3.1	
300	1	STAGING FREEZER ON WHEELS	1/3	120	9.5	1.1	
302	1	UNDERCOUNTER REFRIGERATOR	1/4	120	4.0	0.5	
303	1	WALK-IN COOLER CONDENSER	-	208/3	18.3	6.6	
303A	2	COOLER LIGHTS FANS/HEATER	-	120	10.0	1.2	
304	1	WALK-IN FREEZER CONDENSER	-	208/3	18.3	6.6	
304A	1	FREEZER LIGHTS FANS/HEATER	-	120	10.0	1.2	
305	1	ICE MACHINE	3/4	120	19.3	2.3	
404	1	MIXER	1/3	120	7.2	0.9	
405	1	MIXER TIMER	1/3	120	7.2	0.9	
406	1	MARINATOR	-	120	4.6	0.6	

JUL 09 1996

REGISTERED PROFESSIONAL ENGINEER MICHAEL P. NEILS No. 17207 Exp. 12-31-98 MECHANICAL STATE OF CALIFORNIA

M. Neils Engineering Inc.
10 Fullerton Court, Suite 201
Sacramento, CA. 95820
(916) 453-5240
Project No. 96124.21

Copyright 1996
EDWIN BRUCE ASSOCIATES. All designs drawings, and written material appearing herein, are protected and constitute original and unpublished work of the Architect and may not be copied, revised, re-used or disclosed without the written consent of the Architect. Equipment manufactured by others is excluded. Drawings and specifications are instruments of architectural service, and shall remain the property of the Architect. Use is restricted to the site for which they were prepared.

PLAN CHECK 07-10-96 1

EDWIN BRUCE
Associates
Architects
A.I.A.
1625 The Alameda
Suite 610
San Jose, CA.
95126
Ph. 408/995 5701
Fax 408/995 5022

KFC

K.F.C. JENSEN

CORNER OF BASCOM AVE AND NAGLEE AVE.
SAN JOSE CALIFORNIA

9672250
44

MAY 24, 1996	DATE
TPZ/JJV	DRAWN
1/4" = 1'-0"	SCALE
9405	JOB NO.

E-5

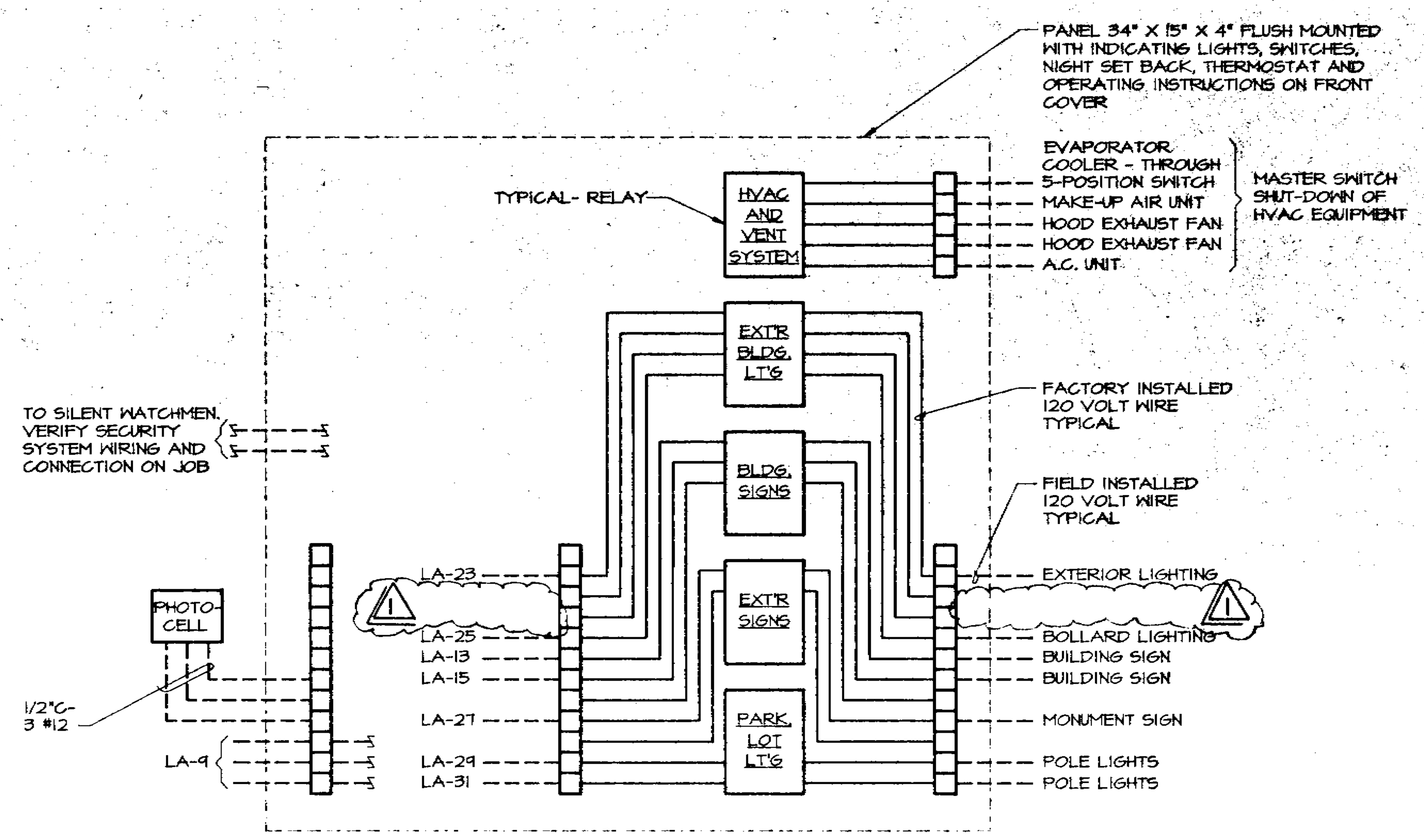

NOTES:

1. PROVIDE 1/2"C STUBBED ABOVE T-BAR CEILING, TERMINATE WITH BUSHING. PROVIDE 2/C #18 TWISTED, 30 FEET MINIMUM, LEAVE 25 FEET TAIL COILED ABOVE CEILING. TERMINATE WIRE AT PANEL PER MANUFACTURERS INSTRUCTIONS.
2. INSTALL PHOTO-CELL ABOVE FINISHED ROOF FACING NORTH. SEAL ROOF PENETRATION WATER TIGHT.

1 / E-6 HVAC / LIGHTING CONTROL PANEL SCHEMATIC

NO SCALE

HVAC/LIGHTING CONTROL NOTES

1.0 SCOPE OF WORK:

A. KFC WILL FURNISH A HVAC / LIGHTING CONTROL PANEL. TWO - THERMOSTATS AND ONE - PHOTOCELL ARE SUPPLIED WITH THE PANEL. DOOR HAS KEY LOCK. ELECTRICAL TRADE WILL WIRE THE SYSTEM AS DIRECTED ON THE ELECTRICAL AND MECHANICAL DRAWINGS. SEE PANEL MANUFACTURERS INSTRUCTIONS FOR HOOK-UP OF PHOTOCELL, SECURITY SYSTEM AND THE TIE-INS TO POWER PANELS.

2.0 SEQUENCE OF OPERATIONS:

A. ILLUMINATED SIGNS AND TOWER LIGHTING SHALL BE TURNED "ON" BY PHOTOCELL SENSOR WHEN THE NATURAL LIGHT LEVEL FALLS BELOW 40 FOOTCANDLES. PHOTOCELL SENSOR SHALL BE ENERGIZED BY A PANEL MOUNTED SWITCH - "ON-OFF-OVERRIDE." OVERRIDE POSITION IS FOR WHEN MANAGER NEEDS SIGNS ON IMMEDIATELY (STORE SIGN SWITCH).

B. EXTERIOR BUILDING MOUNTED LIGHTING SHALL BE TURNED "ON" BY PHOTOCELL SENSOR WHEN THE NATURAL LIGHT LEVEL FALLS BELOW 40 FOOTCANDLES. PHOTOCELL SENSOR SHALL BE ENERGIZED BY AN "ON-OFF" PANEL MOUNTED SWITCH (EXTERIOR BUILDING LIGHT SWITCH).

C. PARKING LOT LIGHTING AND HVAC / HOOD FUNCTIONS ARE CONTROLLED BY THE "OPEN-CLOSED" PANEL MOUNTED SWITCH (STORE OPERATIONS SWITCH).

D. PARKING LOT LIGHTING SHALL BE TURNED "ON" BY PHOTOCELL SENSOR WHEN THE NATURAL LIGHT LEVEL FALLS BELOW 40 FOOTCANDLES PHOTOCELL SENSOR SHALL BE ENERGIZED BY THE STORE OPERATIONS SWITCH.

2.4 ENVIRONMENTAL CONTROL:

A. WHEN THE STORE OPERATION SWITCH IS IN THE "STORE OPEN" POSITION, ROOF-TOP UNIT SUPPLY AIR FANS SHALL RUN CONTINUOUSLY, OUTSIDE AIR DAMPER SHALL OPEN TO NOT LESS THAN MINIMUM POSITION AND HOOD EXHAUST FAN SHALL RUN CONTINUOUSLY.

B. WALL MOUNTED THERMOSTATS FOR UNIT WITHOUT HVAC ECONOMIZER SHALL OPERATE THE HEATING AND COOLING SEQUENCE AS FOLLOWS:

C. WHEN SPACE TEMPERATURE RISES TO 68 DEGREES FAHRENHEIT AND BELOW, BOTH HEATING STAGES SHALL OPERATE TO WARM THE SPACE.

D. WHEN SPACE TEMPERATURE RISES TO 68 DEGREES FAHRENHEIT, SECOND STAGE HEATING SHALL CUT OFF AND FIRST STAGE HEATING SHALL CONTINUE TO OPERATE.

E. WHEN SPACE TEMPERATURE RISES TO 70 DEGREES FAHRENHEIT, FIRST STAGE HEATING SHALL CUT OFF. FIRST STAGE HEATING SHALL CYCLE TO MAINTAIN 70 DEGREES FAHRENHEIT, PLUS OR MINUS ONE DEGREE FAHRENHEIT.

F. WHEN SPACE TEMPERATURE IS BETWEEN 71 DEGREES FAHRENHEIT AND 75 DEGREES FAHRENHEIT (4 DEGREE DEADBAND), NO ENERGY CONSUMING HEATING OR COOLING SHALL OPERATE.

G. WHEN SPACE TEMPERATURE RISES ABOVE 75 DEGREES FAHRENHEIT, FIRST STAGE COOLING SHALL OPERATE TO COOL THE SPACE.

H. WHEN SPACE TEMPERATURE RISES TO 76 DEGREES FAHRENHEIT, SECOND STAGE COOLING SHALL OPERATE TO PROVIDE ADDITIONAL COOLING. SECOND STAGE COOLING SHALL CYCLE TO MAINTAIN 76 DEGREES FAHRENHEIT, PLUS OR MINUS 1 DEGREE FAHRENHEIT.

I. AS THE SPACE TEMPERATURE FALLS THROUGH THE PRESCRIBED RANGE, THE REVERSE SEQUENCE SHALL DE-ACTIVATE COOLING AND ACTIVATE HEATING AS REQUIRED TO MAINTAIN COMFORT CONDITIONS.

J. UNITS WITH HVAC ECONOMIZER SHALL BE CONTROLLED THE SAME AS FOR UNITS WITHOUT HVAC ECONOMIZER WHEN OUTSIDE AIR CONTAINS TOO MUCH HEAT TO PROVIDE NATURAL COOLING, BUT SHALL BE CONTROLLED AS FOLLOWS WHEN OUTSIDE AIR IS COOL ENOUGH TO PROVIDE NATURAL COOLING.

K. WHEN SPACE TEMPERATURE IS 66 DEGREES FAHRENHEIT AND BELOW, BOTH HEATING STAGES SHALL OPERATE TO WARM THE SPACE.

L. WHEN SPACE TEMPERATURE RISES TO 65 DEGREES FAHRENHEIT, SECOND STAGE HEATING SHALL CUT OUT AND FIRST STAGE HEATING SHALL CONTINUE TO OPERATE.

M. WHEN SPACE TEMPERATURE RISES TO 70 DEGREES FAHRENHEIT, FIRST STAGE HEATING SHALL CUT OUT AND FIRST STAGE HEATING SHALL CYCLE TO MAINTAIN 70 DEGREES FAHRENHEIT, PLUS OR MINUS ONE DEGREE FAHRENHEIT.

N. WHEN SPACE TEMPERATURE IS BETWEEN 71 DEGREES FAHRENHEIT AND 77 DEGREES FAHRENHEIT (6 DEGREE DEADBAND), NO ENERGY CONSUMING HEATING TO COOLING SHALL OPERATE. WHEN SPACE TEMPERATURE RISES TO 73 DEGREES FAHRENHEIT, FIRST STAGE COOLING SHALL ACTIVATE UNIT MOUNTED ECONOMIZER.

O. PROVIDE LOW LIMIT DUCT CONTROLLER TO PREVENT MIXED AIR TEMPERATURE BELOW 55 DEGREES FAHRENHEIT.

P. WHEN SPACE TEMPERATURE RISES ABOVE 76 DEGREES FAHRENHEIT, FIRST STAGE COOLING SHALL OPERATE TO COOL THE SPACE.

Q. WHEN SPACE TEMPERATURE RISES ABOVE 76 DEGREES FAHRENHEIT, SECOND STAGE COOLING SHALL OPERATE ADDITIONAL COOLING, SECOND STAGE COOLING SHALL CYCLE TO MAINTAIN 76 DEGREES FAHRENHEIT, PLUS OR MINUS 1 DEGREE FAHRENHEIT.

2.5 STORE CLOSED:

A. WHEN THE SWITCH IS IN THE "STORE CLOSED" POSITION, UNIT SUPPLY AIR FAN SHALL REMAIN OFF. UNITS OUTSIDE DAMPERS SHALL CLOSE AND HOOD FANS SHALL STOP.

B. SPACE NIGHT THERMOSTAT FOR EACH UNIT SHALL CYCLE ITS RESPECTIVE UNIT HEATING (FIRST STAGE ONLY), AND SUPPLY AIR FAN TO MAINTAIN 55 DEGREES FAHRENHEIT, PLUS OR MINUS TWO DEGREES FAHRENHEIT. UNITS OUTSIDE AIR DAMPER SHALL REMAIN CLOSED DURING REDUCED TEMPERATURE CYCLING.

C. COOLING SHALL REMAIN OFF.

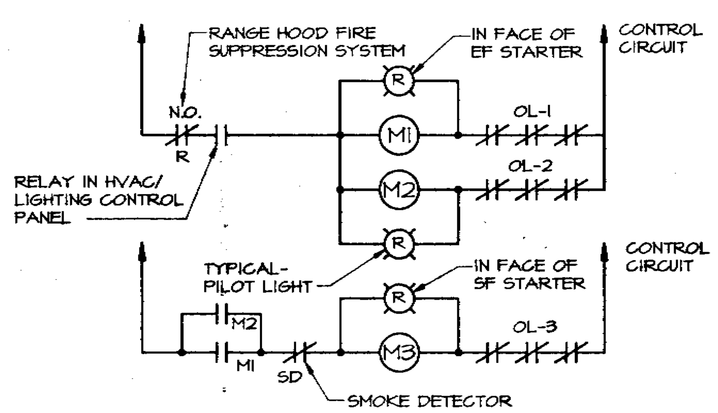

RANGE HOOD FAN CONTROL LEGEND

- (M1) STARTER COIL FOR HOOD EXHAUST FAN #1.
- (M2) STARTER COIL FOR HOOD EXHAUST FAN #2.
- (M3) STARTER COIL FOR MAKE-UP AIR UNIT.
- RELAY CONTACT, NORMALLY OPEN
- RELAY CONTACT, NORMALLY CLOSED

2 / E-6 RANGE HOOD FAN CONTROL DIAGRAM

NO SCALE

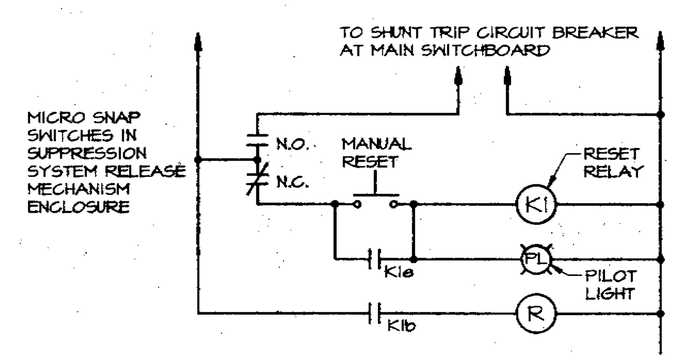

FIRE SUPPRESSION SYSTEM LEGEND

- (K1) RESET RELAY WITH PILOT LIGHT AND RESET FURNISHED BY ANSUL.
- (R) RELAY, ALLEN BRADLEY #700-N201A1 FURNISHED BY ELECTRICAL TRADE.
- RELAY CONTACT, NORMALLY OPEN
- RELAY CONTACT, NORMALLY CLOSED

3 / E-6 FIRE SUPPRESSION SYSTEM DIAGRAM

NO SCALE

9672260

45

REGISTERED PROFESSIONAL ENGINEER MICHAEL F. NOLLS No. 8707 Exp. 12-31-96 ELECTRICAL STATE OF CALIFORNIA

M. Nolls Engineering Inc.
10 Fullerton Court, Suite 201
Sacramento CA. 95825
(916) 923-4400
Project No. 96124.21

Copyright 1996
EDWIN BRUCE ASSOCIATES. All designs drawings, and written material appearing herein, are protected and constitute original and unpublished work of the Architect and may not be copied, reviewed, re-used or disclosed without the written consent of the Architect. Equipment manufactured by others is excluded. Drawings and specifications are instruments of architectural service, and shall remain the property of the Architect. Use is restricted to the site for which they were prepared.

PLAN CHECK 07-10-96 (1)

EDWIN BRUCE
Associates
Architects
A.I.A.
1625 The Alameda
Suite 610
San Jose, CA.
95126
Ph. 408/995 5701
Fax 408/995 5022

KFC

K.F.C. JENSEN
CORNER OF BASCOM AVE. AND NAGLEE AVE.
SAN JOSE CALIFORNIA

MAY 24, 1996	DATE
TPZ/JJV	DRAWN
NONE	SCALE
9405	JOB NO.

E-6

ELECTRICAL SPECIFICATION

PART 1 - GENERAL:

1.01 DESCRIPTION: WORK UNDER THIS SECTION INCLUDES ALL LABOR, MATERIALS, AND EQUIPMENT NECESSARY TO INSTALL NEW ELECTRICAL ITEMS SPECIFIED AND AS SHOWN OR NOT SHOWN WHICH CAN REASONABLY BE INFERRED AS REQUIRED AND NECESSARY TO PROVIDE A COMPLETE AND WORKABLE SYSTEM.
A. WORK INCLUDED:
1. INSTALLATION:
A. LUMINAIRES, COMPLETE WITH LAMPS.
B. CONDUITS AND CONDUCTORS.
C. RECEPTACLES AND TELEPHONE OUTLETS.
D. CONNECT OWNER FURNISHED EQUIPMENT AND CONNECT HVAC PLUMBING EQUIPMENT.
E. PANELBOARDS, COMPLETE WITH ALL CIRCUIT BREAKERS.
F. TELEPHONE TERMINALS AND CONDUITS WITH PULL WIRES.

1.02 RELATED WORK SPECIFIED ELSEWHERE: DIVISION 15, HEATING, VENTILATING, AND AIR CONDITIONING (HVAC), PLUMBING AND TEMPERATURE CONTROL. RACEWAYS AND CONDUCTORS. ELECTRICAL BRANCH CIRCUITRY AND POWER CONNECTIONS UNDER DIVISION 16.

1.03 QUALITY ASSURANCE: ALL WORK AND MATERIALS SHALL BE IN FULL ACCORDANCE WITH THE LATEST RULES AND REGULATIONS OF THE STATE FIRE MARSHALL, ELECTRICAL SAFETY ORDERS, NATIONAL ELECTRICAL CODE AND ALL OTHER APPLICABLE STATE AND LOCAL LAWS OR REGULATIONS. NOTHING IN THESE PLANS IS TO BE CONSTRUED TO PERMIT WORK NOT CONFORMING TO THESE CODES.

1.04 SUBMITTALS: MANUFACTURERS' DATA: CONSISTS OF SPECIFICATION AND ENGINEERING DATA OF SPECIFIED ITEMS AND PROVIDES COMPLETE DESCRIPTIVE INFORMATION.

1.05 PROJECT DELIVERY, STORAGE AND HANDLING: DELIVER MATERIALS AND EQUIPMENT TO SITE IN MANUFACTURERS' ORIGINAL CONTAINERS AND STORE IN LOCATIONS SECURE FROM WEATHER OR ACCIDENTAL DAMAGE.

1.06 VERIFICATION: BE RESPONSIBLE FOR COORDINATION OF WORK AT SITE AND FOR WORK OF ALL TRADES. VISIT PREMISES AND BE FAMILIAR WITH ALL DETAILS OF WORK. EXISTING CONDITIONS, AND VERIFY DIMENSIONS IN FIELD. REPORT ANY CONFLICTS FOR ADJUSTMENT BEFORE PROCEEDING WITH WORK.

PART 2 - PRODUCTS:

2.01 MATERIALS:
A. CONDUIT, FITTINGS AND SUPPORTS:
1. ELECTRICAL METALLIC TUBING (EMT): ELECTRO-GALVANIZED ANSI STANDARD NO. C80.3, AND UL 797. ALL EMT FITTINGS SHALL BE SET SCREW TYPE FOR INTERIOR APPLICATIONS AND STEEL COMPRESSION TYPE FOR EXTERIOR APPLICATIONS.
2. FLEXIBLE CONDUIT: FLEXIBLE STEEL WITH INTERLOCKED SPIRALLY WOUND STEEL STRIP, ZINC COATS INSIDE AND OUTSIDE. LIQUID-TIGHT FLEXIBLE CONDUIT SHALL BE WITH EXTRUDED POLYVINYL COVERING, MINIMUM SIZE SHALL BE 1/2 INCH EXCEPT WHERE FURNISHED AS PART OF APPROVED MANUFACTURED ASSEMBLY. ALL KFC FURNISHED EQUIPMENT SHALL BE CONNECTED WITH LIQUID-TIGHT FLEXIBLE CONDUIT. FULL-IN GROUND BOND IN ALL FLEXIBLE CONDUITS.
3. PVC CONDUIT: TYPE 40 AND TYPE 80, 90 DEGREE CELSIUS COMPOSED OF POLYVINYL CHLORIDE. MATERIAL SHALL HAVE TENSILE STRENGTH OF 7,000 PSI AT 73.4 DEGREES FAHRENHEIT , FLEXURAL STRENGTH OF 11,000 PSI AND COMPRESSIVE STRENGTH OF 8,000 PSI. FITTINGS SHALL BE OF SAME MANUFACTURER. JOINTS SHALL BE SOLVENT WELDED AND SHALL BE MADE WATERTIGHT. FULL-IN GROUND BOND IN ALL CONDUIT RUNS PER N.E.C.

B. CONDUCTORS: BRANCH CIRCUIT CONDUCTORS SHALL NOT BE SMALLER THAN NO. 12 AWG. MECHANICAL EQUIPMENT CONTROL CONDUCTORS SHALL NOT BE SMALLER THAN NO. 4 AWG, UNLESS SPECIFICALLY NOTED. ALL CONDUCTORS SHALL BE COPPER, 98 PERCENT CONDUCTIVITY. CONDUCTOR SIZE NO. 8 AWG AND LARGER SHALL BE STRANDED COPPER. CONDUCTOR INSULATIONS SHALL BE 600 VOLT RATED, MINIMUM 75 DEGREE CELSIUS AND SHALL BE TYPE THW. THWN / THHN, OR XHHW.
C. BOXES: GENERAL USE OUTLET BOXES SHALL BE GALVANIZED, ONE PIECE, PRESSED STEEL TYPE. BOXES MOUNTED IN WALLS OR CEILINGS FINISHED WITH GYPSUM BOARD SHALL BE FURNISHED WITH PLASTER RINGS. ALL SURFACE MOUNTED BOXES SHALL BE WITHOUT K.O.'S.
D. RECEPTACLES: SPECIFICATION GRADE, DUPLEX RECEPTACLES SHALL BE THREE WIRE GROUNDING TYPE RATED 20 AMPERES. 125 VOLTS, AC, NEMA 5-20R. BODY SHALL BE PHENOLIC COMPOUND AND IVORY COLOR. PLATES SHALL BE STAINLESS STEEL, SINGLE GANG OR MULTI GANG AS REQUIRED. SPECIAL USE RECEPTACLES SHALL BE AS NOTED ON PLAN.
E. WALL SWITCHES: SPECIFICATION GRADE, HEAVY DUTY, QUIT TYPE, RATED 20 AMPERES, 120/277 VOLTS AC. BODY SHALL BE PHENOLIC COMPOUND AND IVORY COLOR. PLATES SHALL BE STAINLESS STEEL, SINGLE GANG OR MULTI GANG AS REQUIRED.

2.02 EQUIPMENT:
A. LUMINAIRES: PROVIDE LUMINAIRES AS SCHEDULED ON PLAN, INCLUDING LAMPS AND SUPPORTS, COMPLETE AND READY FOR OPERATION. SUPPORT FIXTURES TO RESIST SEISMIC FORCES. FLUORESCENT LAMP BALLASTS SHALL BE CBM / ETL CERTIFIED. HIGH PERFORMANCE WATT SAVERS, HIGH POWER FACTOR. THERMALLY PROTECTED, ELECTRONIC, UL LABELED. FLUORESCENT LAMPS SHALL BE ENERGY EFFICIENT, AS SCHEDULED ON PLANS.
B. PANELBOARDS: SHALL BE OF THE TYPE AND ARRANGEMENT AS SHOWN ON PLANS. PANELBOARDS SHALL BE BOLT-ON CIRCUIT BREAKER TYPE, DEAD FRONT CONSTRUCTION WITH HINGED AND LOCKING DOOR. FRONT TRIM SHALL HAVE CONCEALED TRIM CLAMPS. BUSSES SHALL BE ALUMINUM AND SHALL BE BRACED TO WITHSTAND MINIMUM SHORT CIRCUIT CURRENTS INDICATED.
C. CIRCUIT BREAKERS: CIRCUIT BREAKERS SHALL BE SINGLE POLE AND MULTI-POLE. SINGLE POLE CIRCUIT BREAKERS SHALL BE MODULAR IN SIZE. MULTI-POLE CIRCUIT BREAKERS SHALL HAVE INTERNAL COMMON TRIP WITH A SINGLE OPERATING HANDLE. PLUG-IN TYPE CIRCUIT BREAKERS SHALL NOT BE USED.

PART 3 - EXECUTION:

3.01 INSTALLATION:
A. CONDUIT: INSTALL CONDUITS CONCEALED IN PARTITIONS, OTHER THAN SOLID MASONRY. CONDUIT MAY BE RUN EXPOSED ON UNFINISHED WALLS, AND WHEN RUN TO SURFACE PANELBOARDS, BOXES, OR GUTTERS. INSTALL EXPOSED CONDUIT RUNS PARALLELLED OR PERPENDICULAR TO BUILDING LINES. MAKE CHANGES IN DIRECTIONS OF RUNS WITH SYMMETRICAL BENDS. REMOVE AND REPLACE DENTED OR DEFORMED CONDUITS. DO NOT USE FLEXIBLE CONDUIT EXCEPT AS WHIP FOR RECESSED LUMINAIRES OR FOR SHORT LENGTH CONNECTIONS TO EQUIPMENT OR MOTORS SUBJECT TO VIBRATIONS.
B. CONDUCTORS: LABEL EACH BRANCH CIRCUIT AND CONTROL CONDUCTOR WITH CIRCUIT AND/OR TERMINAL NUMBER TO WHICH IT IS CONNECTED. LABEL CONDUCTORS AT PANELBOARDS, PULL BOXES, AND POINTS OF UTILIZATION. COLOR CODING SHALL BE CONTINUOUS AND CONSISTENT THROUGHOUT THE WORK. MAKE JOINTS, SPLICES, TAPS, AND CONNECTIONS OF CONDUCTORS WITH SOLDERLESS CONNECTORS. MAKE SPLICES FOR #10 AWG WITH INSULATED ELECTRICAL SPRING CONNECTORS. JOINTS FOR #8 AWG AND LARGER CONDUCTORS SHALL BE MADE WITH SOLDERLESS TOOL APPLIED PRESSURE LUGS AND CONNECTORS.

3.02 GROUNDING: INSTALL AND CONNECT GROUND FITTINGS TO CONFORM WITH CODE REQUIREMENTS. GROUND CONDUCTORS SHALL BE COPPER. COMPLETELY GROUND ALL EQUIPMENT CASES, MOTOR FRAMES, AND ALL OTHER ITEMS TO SATISFY REQUIREMENTS OF N.E.C. INSTALL BOND WIRE IN ALL FLEXIBLE CONDUITS AND ALL PVC CONDUITS, BOND TO ALL METALLIC PARTS USING APPROVED FITTINGS.

3.03 EQUIPMENT CONNECTIONS: ROUGH-IN LOCATIONS SHOWN FOR EQUIPMENT FURNISHED UNDER OTHER DIVISIONS ARE APPROXIMATE ONLY. VERIFY EXACT REQUIREMENTS OF ALL EQUIPMENT PRIOR TO ROUGHING-IN. MAKE ELECTRICAL CONNECTIONS TO POINT OF WIRING FROM BUILDING ELECTRICAL SYSTEM.

3.04 ACCURATELY SET AND LEVEL EQUIPMENT. ANCHOR PROPERLY TO PREVENT MOVEMENT DURING EARTHQUAKE.

3.05 EQUIPMENT IDENTIFICATION: PROPERLY IDENTIFY PANELBOARDS. MOTOR DISCONNECT SWITCHES, STARTERS, AND OTHER APPARATUS USED FOR OPERATION OR CONTROL OF CIRCUITS, OR EQUIPMENT WITH LAMINATED PLASTIC NAMEPLATES WITH BLACK BACKGROUND AND WHITE 1/4 INCH LETTERING. IDENTIFY ALL BRANCH CIRCUITS IN PANELBOARDS WITH A TYPE WRITTEN IDENTIFICATION CARD BEHIND A CLEAR PLASTIC PROTECTOR, MOUNTED ON INSIDE OF HINGED DOOR.

3.06 QUALITY CONTROL: TEST: AFTER THE INSTALLATION IS COMPLETE AND AT SUCH TIME AS DIRECTED, CONDUCT AN OPERATING TEST FOR APPROVAL OF ALL EQUIPMENT. DEMONSTRATE EQUIPMENT TO OPERATE IN ACCORDANCE WITH REQUIREMENTS OF THIS SECTION OF SPECIFICATION AND AS INTENDED BY EQUIPMENT MANUFACTURER.

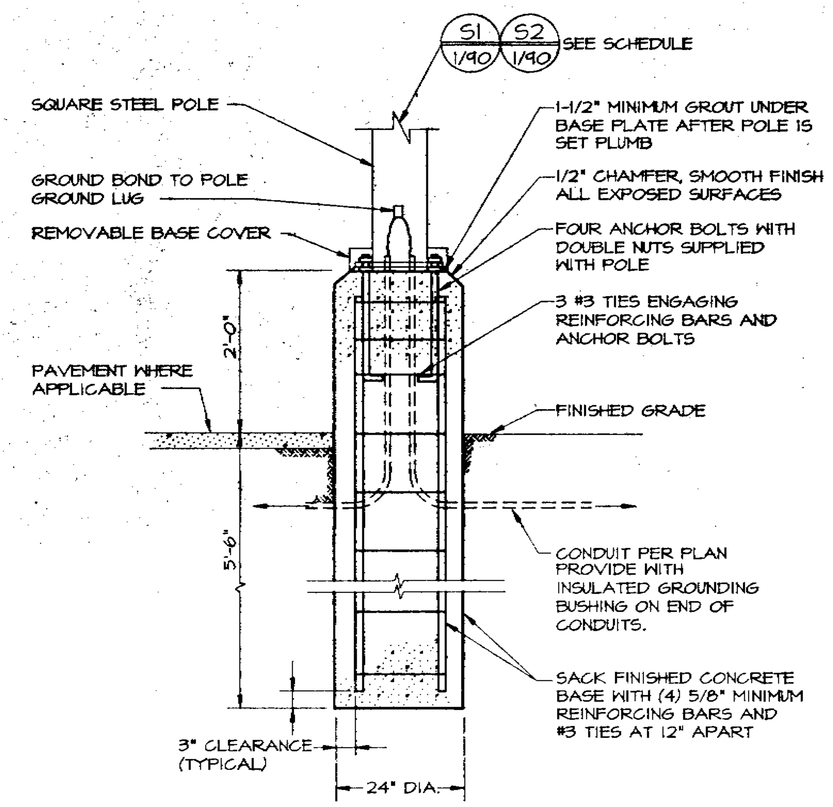

LUMINAIRE TYPE "S"

1 / E-7 POLE BASE MOUNTING DETAIL

NO SCALE

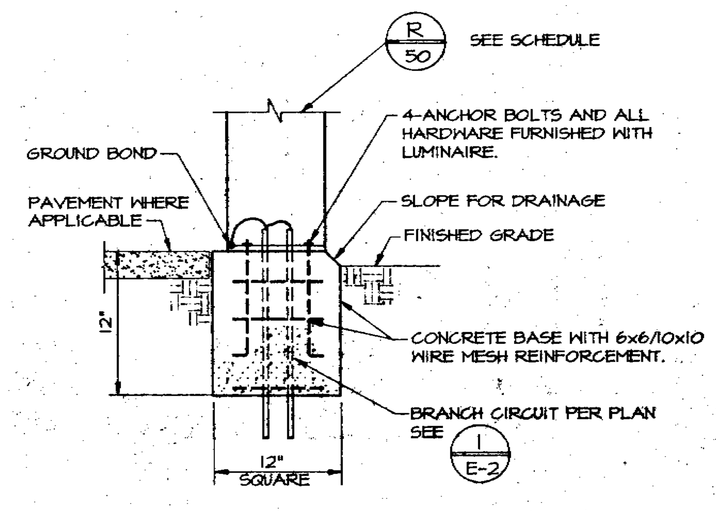

2 / E-7 BOLLARD LUMINAIRE "R" MOUNTING DETAIL

NO SCALE

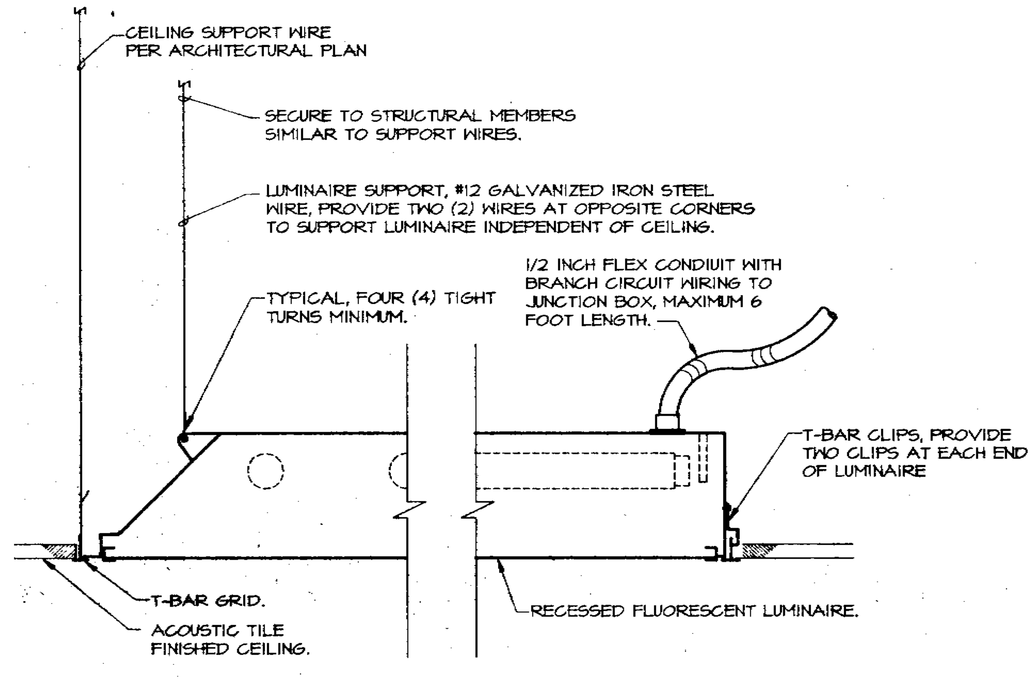

3 / E-7 LAY-IN LUMINAIRE MOUNTING DETAIL

NO SCALE

9672260
46

REGISTERED PROFESSIONAL ENGINEER MICHAEL P. NEILS No 8707 Exp. 12-31-98 STATE OF CALIFORNIA

JUL 9 9

M. Neils Engineering Inc.
10 Fulerton Court, Suite 201
Sacramento CA 95828
(916) 853-1400
Project No. 36124.21

Copyright 1995
EDWIN BRUCE ASSOCIATES. All designs drawings, and written material appearing herein, are protected and constitute original and unpublished work of the Architect and may not be copied, revised, re-used or disclosed without the written consent of the Architect. Equipment manufactured by others is excluded. Drawings and specifications are instruments of architectural service, and shall remain the property of the Architect. Use is restricted to the site for which they were prepared.

EDWIN BRUCE
Associates
Architects
A.I.A.
1625 The Alameda
Suite 610
San Jose, CA.
95126
Ph. 408/995 5701
Fax 408/995 5022

KFC

K.F.C. JENSEN
CORNER OF BASCOM AVE AND NAGLEE AVE.
SAN JOSE CALIFORNIA

MAY 24, 1996	DATE
TPZ/JJV	DRAWN
NONE	SCALE
9405	JOB NO

E-7

7 OF 7

Copyright 1995
EDWIN BRUCE ASSOCIATES. All designs drawings, and written material appearing herein, are protected and constitute original and unpublished work of the Architect and may not be copied, revised, re-used or disclosed without the written consent of the Architect. Equipment manufactured by others is excluded. Drawings and specifications are instruments of architectural service and shall remain the property of the Architect. Use is restricted to the site for which they were prepared.

KFC

PROJECT DESCRIPTION

A. PROPOSAL for a new Kentucky Fried Chicken
250 North Bascom Ave
San Jose, Ca. 95128

B. OWNER: Harman Management Corporation
199 First Street Suite 212
Los Altos, Ca.
Phone: (415) 941-5681

C. PROJECT DESCRIPTION:
Harman Management Corporation is proposing to combine two existing parcels into a single lot to accomodate a new KFC restaurant. The existing on-site Kentucky Fried Chicken building will be demolished except for the bucket sign. A single curb cut will serve the new KFC parking lot. Building height, mass, texture and colors will be representative of the surrounding context. The new building and site design will comply with all local, state, and federal codes, ordinances, and regulations.

LOCATION MAP

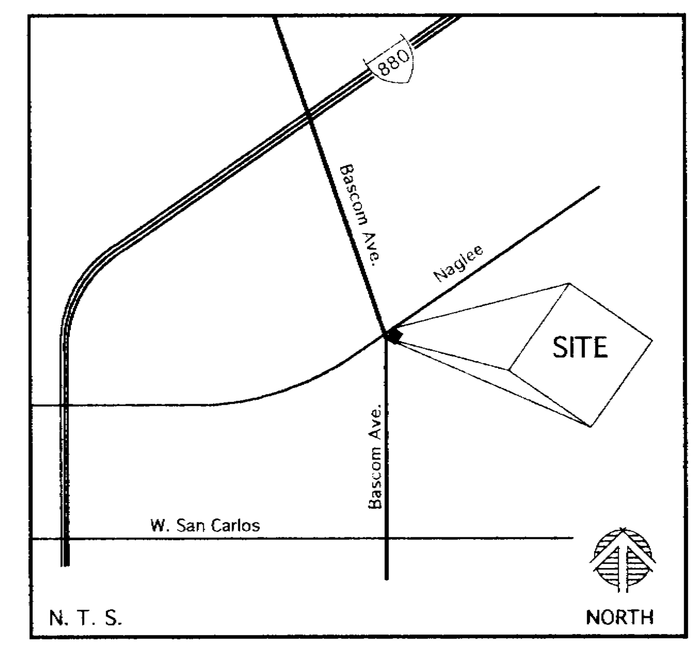

SHEET INDEX

A-1 COVER SHEET
A-2 EXISTING SITE PLAN
A-3 SITE PLAN / DRAINAGE
A-4 ELEVATIONS
A-5 FLOOR PLAN
A-6 LANDSCAPE PLAN
A-7 PLANTING SCHEDULE

PROJECT DATA

SITE AREA:	20,266 Sq. ft.
GROSS BUILDING AREA:	3,053 Sq. ft. TOTAL BUILDING
NET BUILDING AREA:	2,595 Sq. ft. TOTAL BUILDING
OFF STREET PARKING:	26 UNIFORM SPACES 1 ACCESSIBLE SPACE 1 VAN ACCESSIBLE SPACE 28 TOTAL SPACES
SITE COVERAGE:	BUILDING - 15 % PARKING - 44 % LANDSCAPING - 41 %
TYPE OF CONSTRUCTION:	V - N
TENANT SPACE OCCUPANCY:	A - 3
ZONING:	C - 1
OCCUPANT LOAD:	66 FIXED SEATS IN DINING RM.
APPLICABLE CODE:	1991 U.B.C.
JURISDICTION:	SAN JOSE, CA.:
PARCEL NUMBER:	APN 274-21-34 & 274-21-35
FIRE SPRINKLERS:	HOODS ONLY

9672260

47

EDWIN BRUCE
Associates
Architects
A.I.A.
1625 The Alameda
Suite 610
San Jose, CA.
95126
Ph. 408/995 5701
Fax 408/995 5022

FINAL PERMIT
PLANNING DEPARTMENT
H95-18-78
KFC

H95-18-78

K.F.C. JENSEN
CORNER OF BASCOM AVE. AND NAGLEE AVE.
SAN JOSE CALIFORNIA

DEC. 19, 1995	DATE
K.K.	DRAWN
AS SHOWN	SCALE
9405	JOB NO.

A-1

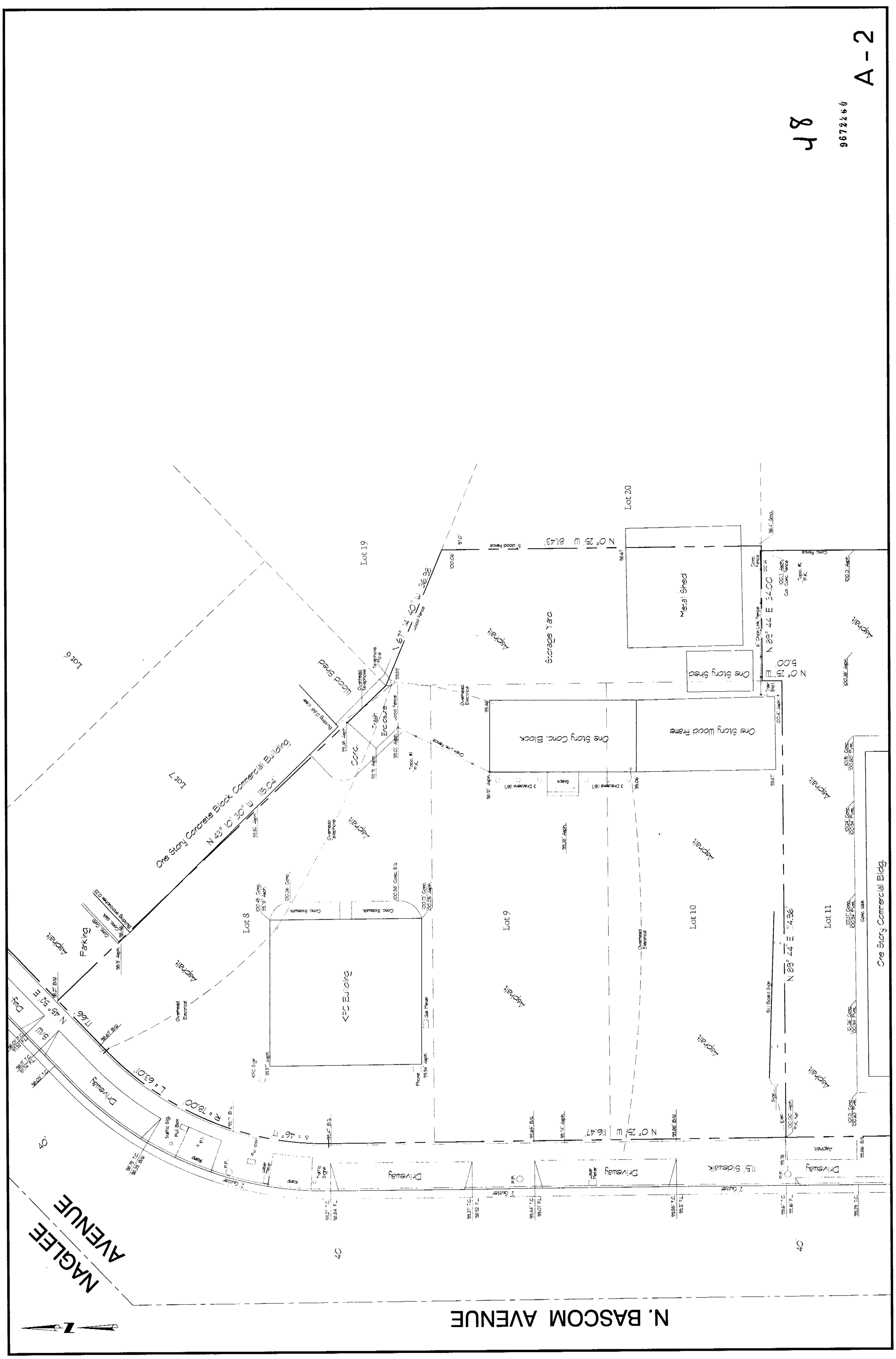
N. BASCOM AVENUE
NAGLEE AVENUE
One Story Concrete Block Commercial Building
N 43° 10' 30" W 115.04'
Lot 7
Lot 8
Lot 9
Lot 10
Lot 11
Lot 19
Lot 20
Lot 6
Storage Yard
Metal Shed
One story Shed
One story Conc. Block
One story wood Frame
Wood Shed
Parking
Driveway
Asphalt
KFC Building
One Story Conc. Bldg.
N 0° 25' W 81.43'
N 0° 25' W 116.47'
N 89° 44' E 114.96'
N 88° 47' E 34.00'
N 0° 25' W 5.00'
N 67° 14' 40" W 36.98'
N 45° 52' E 11.66'
L = 63.01'
R = 78.00'
Δ = 46° 17'
Traffic Sig.
Pull Box
Ramp
Traffic Signal
Water Meter
Gas Meter
Phone
Trash Enclosure
Chain Link Fence
Wood Fence
Conc. Fence
Overhead Electrical
Overhead Telephone
Telephone Pole
Building Overhang
Building approaches
Conc. Walk
Conc. Sidewalk
11.5' Sidewalk
Sign
Bill Board Sign
Guttar
Curb
Drive
Step
3 Dracaena (18')
KFC Sign
Tree Encl.
Tree Encl.
Topo. #1 P.K.
Topo. #2 P.K.
Topo. #3 P.K.
Topo. #4 P.K.
P.P.
E.P.
Elec.
Lot 8 Conc. 100.45 99.78 Asph.
100.36' Conc.
100.58' Conc. 6.4'
100.73' Conc. 100.05 Asph.
100.06'
100.11 Asph. Cor. Conc. Fence
100.14
100.13 Asph.
100.38' Asph.
100.46'
100.26' Asph.
100.01' Asph.
99.98' Asph.
99.97' Asph.
99.96'
99.95' Asph.
99.93' Asph.
99.92' Asph.
99.91' Asph.
99.90' Asph.
99.89' Asph.
99.88' Asph.
99.87' Asph.
99.86' Asph.
99.85' Asph.
99.84' Asph.
99.83' Asph.
99.82' Asph.
99.81' Asph.
99.80' Asph.
99.79' Asph.
99.78' Asph.
99.77' Asph.
99.76' Asph.
99.75' Asph.
99.74' Asph.

SITE PLAN

1/8" = 1'-0"

PARKING & SEATING CALCULATIONS

1083 S.F. DINING AREA / 40 = 27 SPACES REQ'D ---- 28 SPACES PROVIDED

28 SPACES x 2.5 = 70 SEATS MAXIMUM ---- 66 SEATS PROVIDED

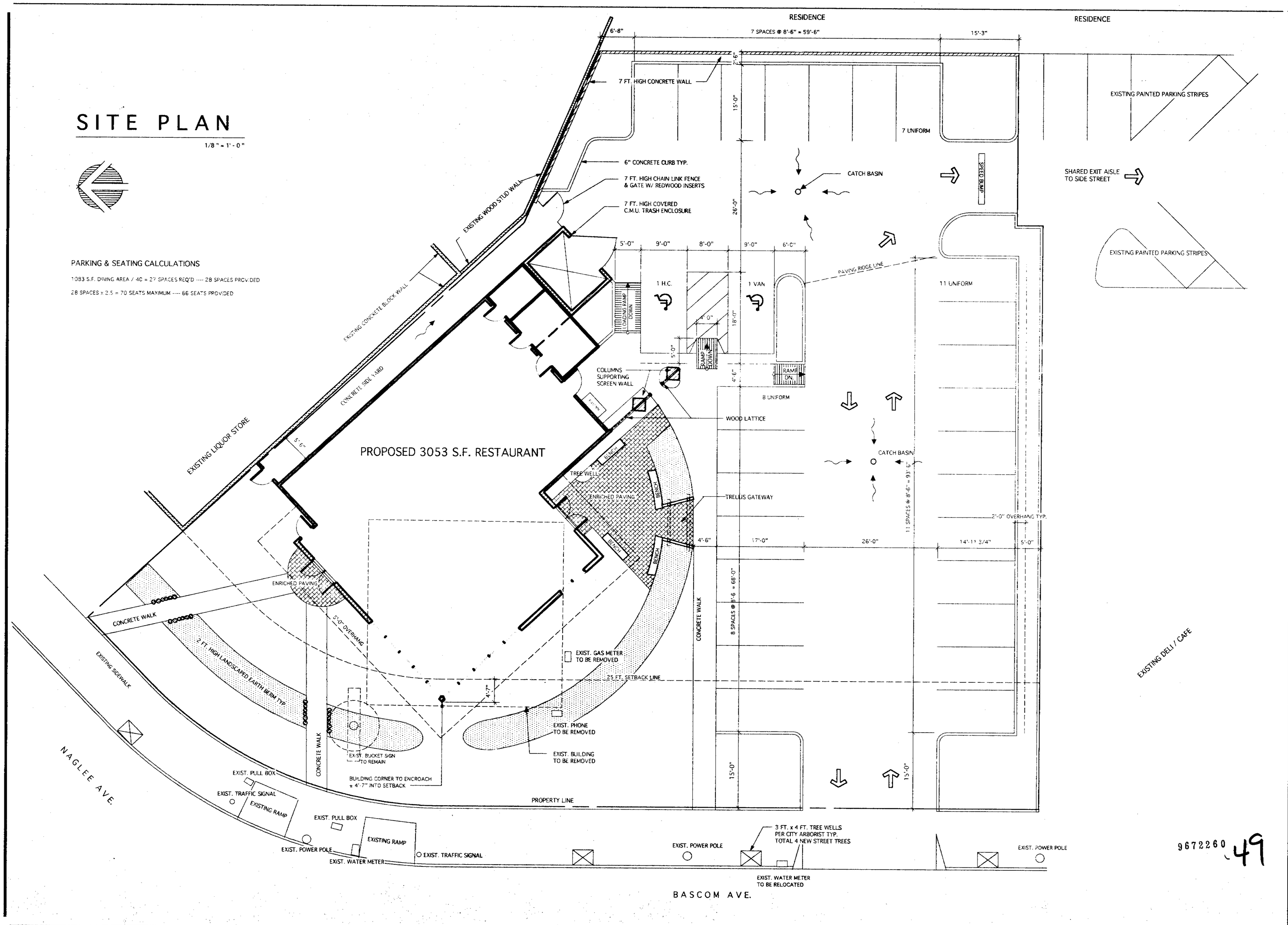

9672260 49

Copyright 1995
EDWIN BRUCE ASSOCIATES. All designs drawings, and written material appearing herein, are protected and constitute original and unpublished work of the Architect and may not be copied, revised, re-used or disclosed without the written consent of the Architect. Equipment manufactured by others is excluded. Drawings and specifications are instruments of architectural service, and shall remain the property of the Architect. Use is restricted to the site for which they were prepared.

EDWIN BRUCE
Associates
Architects
A.I.A.

1625 The Alameda
Suite 610
San Jose, CA 95126
Ph 408/995 5701
Fax 408/995 5022

KFC

K.F.C. JENSEN

CORNER OF BASCOM AVE. AND NAGLEE AVE.
SAN JOSE CALIFORNIA

DEC. 19, 1995	DATE
D.C.	DRAWN
1/8"=1'-0"	SCALE
9405	JOB NO.

A-3

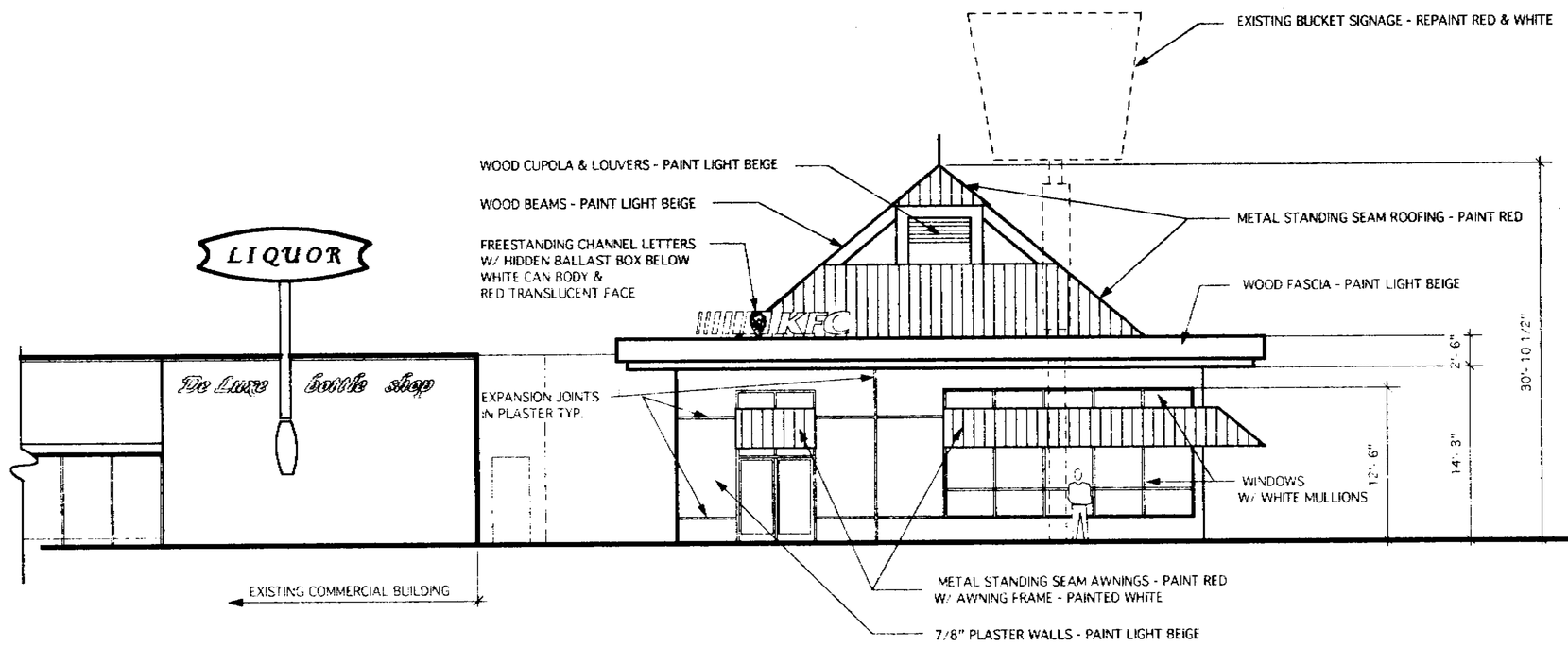

WEST ELEVATION

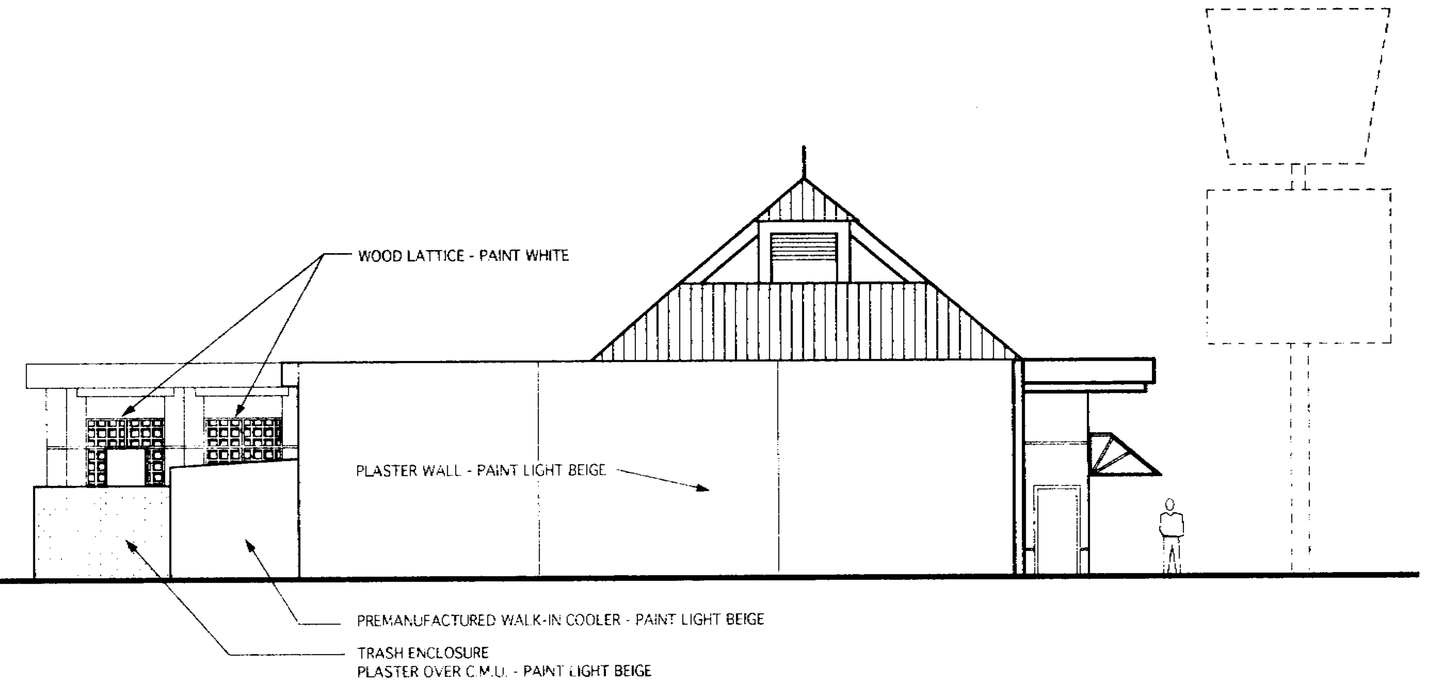

NORTH ELEVATION

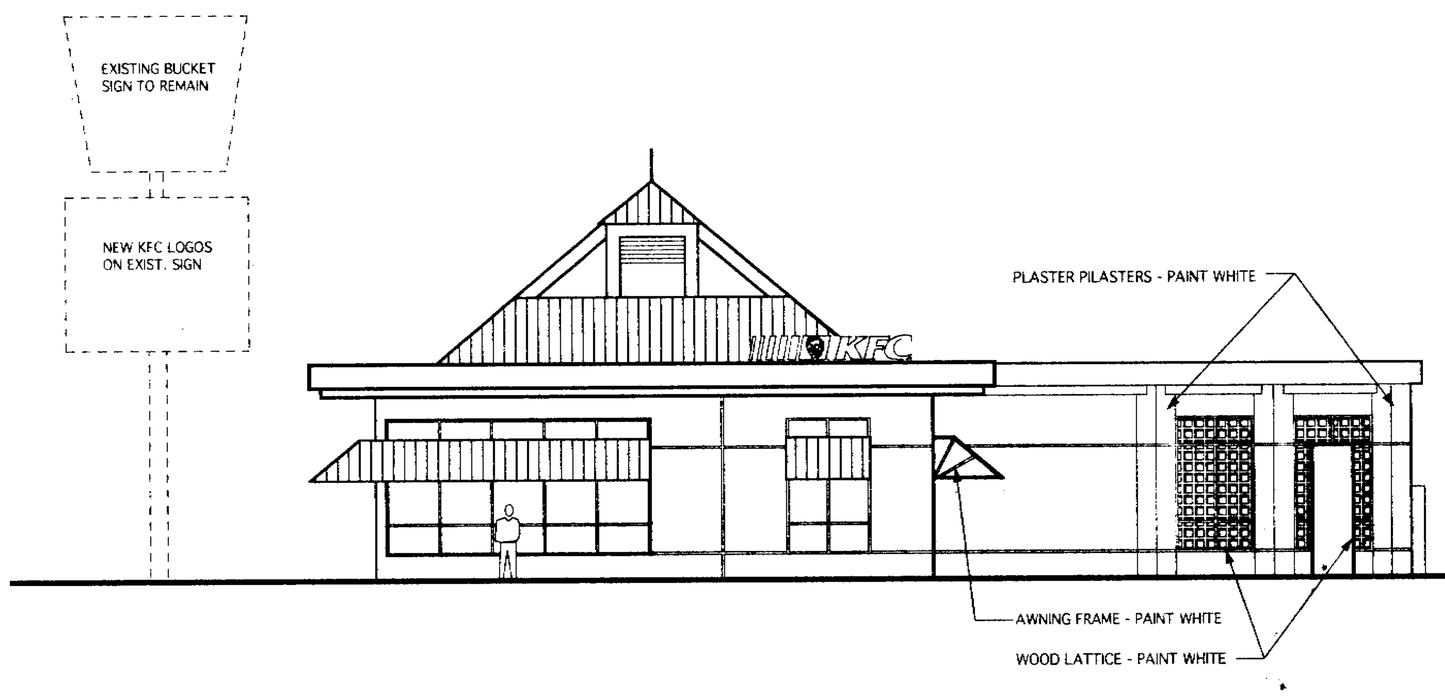

SOUTH ELEVATION

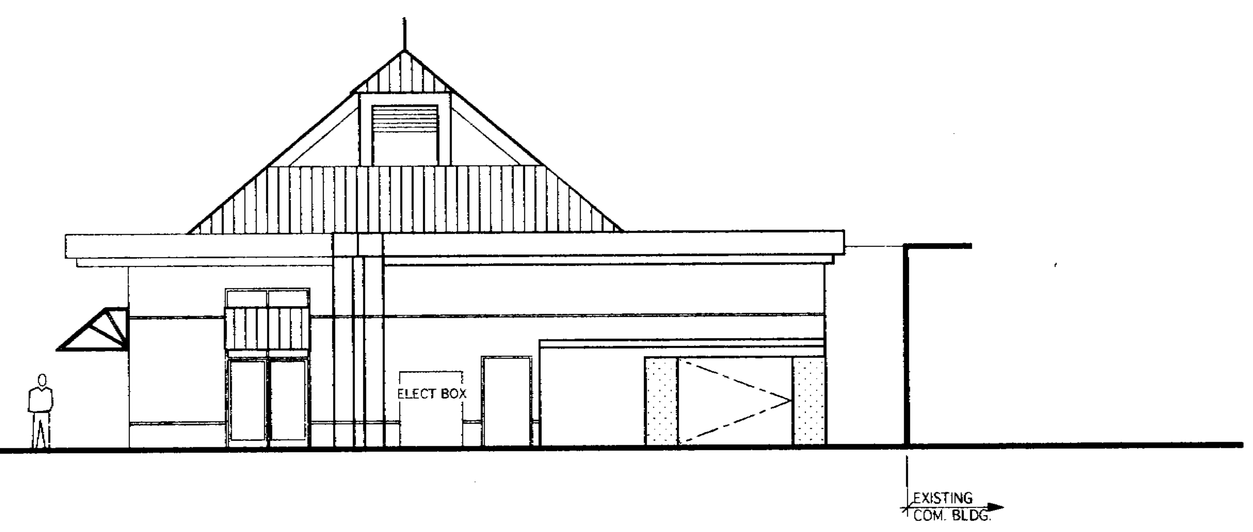

EAST ELEVATION

9672260

50

Copyright 1995
EDWIN BRUCE ASSOCIATES. All designs drawings, and written material appearing herein, are protected and constitute original and unpublished work of the Architect and may not be copied, reused, reused or disclosed without the written consent of the Architect. Equipment manufactured by others is excluded. Drawings and specifications are instruments of architectural service, and shall remain the property of the Architect. Use is restricted to the site for which they were prepared.

EDWIN BRUCE
Associates
Architects
A.I.A.

1625 The Alameda
Suite 610
San Jose, CA.
95126
Ph. 408/995 5701
Fax 408/995 5022

KFC

K.F.C. JENSEN

CORNER OF BASCOM AVE. AND NAGLEE AVE.
SAN JOSE
CALIFORNIA

DEC. 19, 1995	DATE
D.C.	DRAWN
1/4 = 1'-0"	SCALE
9405	JOB NO.

A-4

4 OF 7

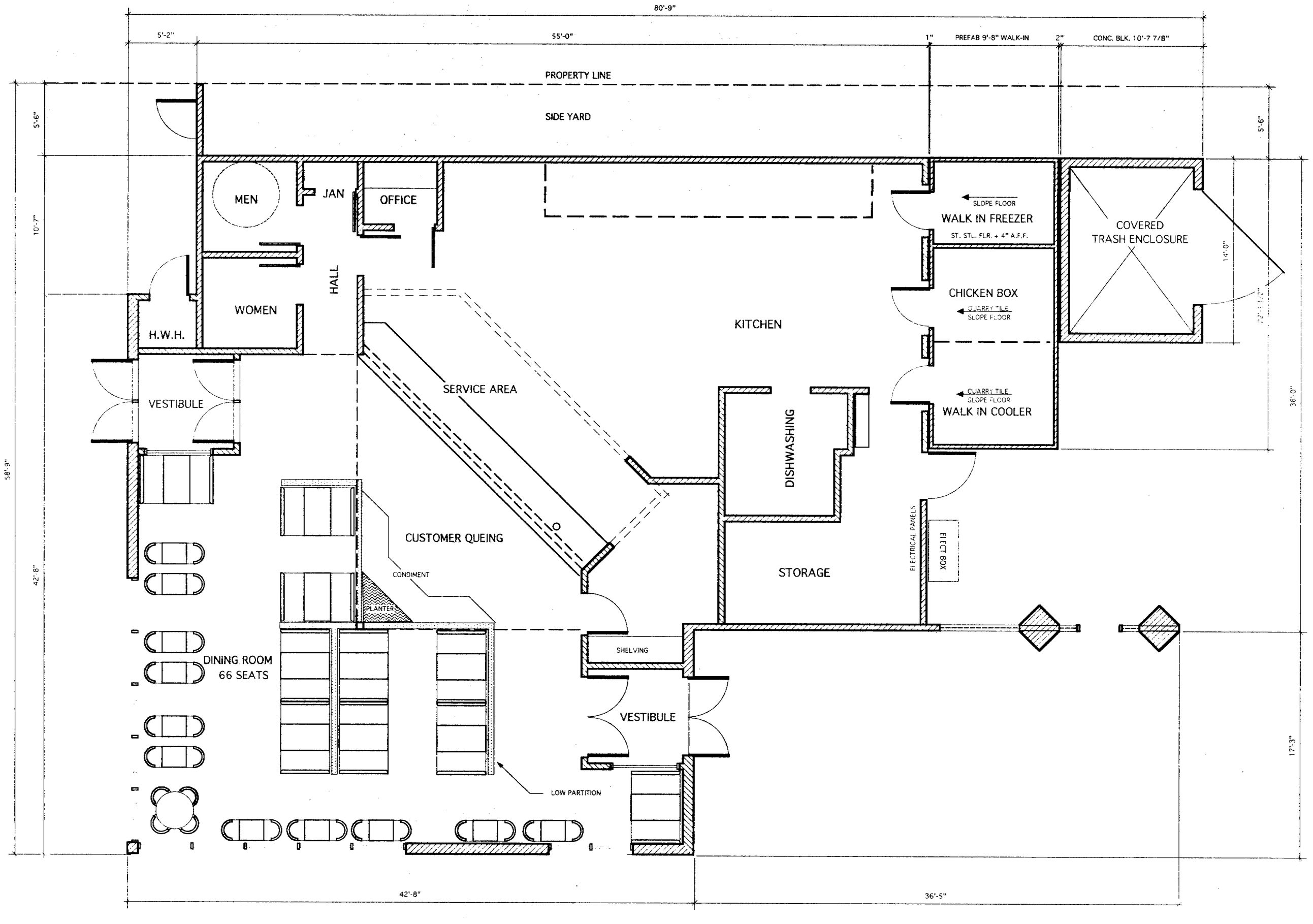

FLOOR PLAN

2840 S.F. BUILDING PLUS 213 S.F. WALK-IN TOTALLING 3053 S.F.

9672260 51

Copyright 1995
EDWIN BRUCE ASSOCIATES. All designs drawings, and written material appearing herein, are protected and constitute original and unpublished work of the Architect and may not be copied, revised, re-used or disclosed without the written consent of the Architect. Equipment manufactured by others is excluded. Drawings and specifications are instruments of architectural service, and shall remain the property of the Architect. Use is restricted to the site for which they were prepared.

EDWIN BRUCE
Associates
Architects
A.I.A.
1625 The Alameda
Suite 610
San Jose, CA.
95126
Ph. 408/995 5701
Fax 408/995 5022

KFC

K.F.C. JENSEN

CORNER OF BASCOM AVE. AND NAGLEE AVE.
SAN JOSE CALIFORNIA

DEC. 19, 1995	DATE
D.C.	DRAWN
1/4" = 1'-0"	SCALE
9405	JOB NO.

A-5

5 OF 7

LANDSCAPE PLAN

1/8" = 1'-0"

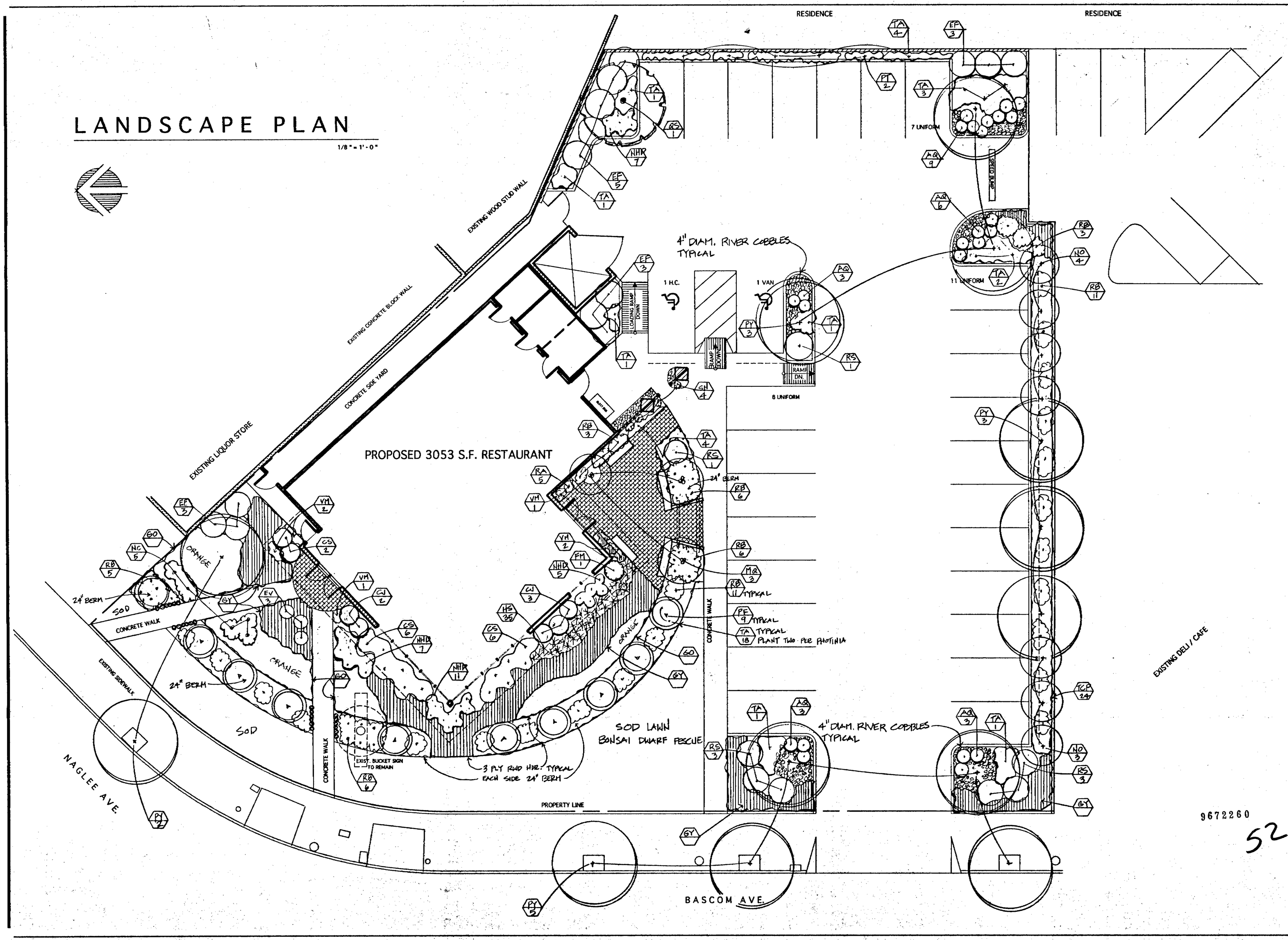

Copyright 1995
EDWIN BRUCE ASSOCIATES. All designs drawings, and written material appearing herein, are protected and constitute original and unpublished work of the Architect and may not be copied, revised, re-used or disclosed without the written consent of the Architect. Equipment manufactured by others is excluded. Drawings and specifications are instruments of architectural service, and shall remain the property of the Architect. Use is restricted to the site for which they were prepared.

BRANDEAU
Associates
Landscape
Architects

1005 Lakedale Way
Sunnyvale, CA 94089
Ph 415/967 6677

state licence No. 1676

KFC

K.F.C. JENSEN

CORNER OF BASCOM AVE. AND NAGLEE AVE.
SAN JOSE
CALIFORNIA

DEC. 19, 1995	DATE
D.B.	DRAWN
1/8"=1'-0"	SCALE
9405	JOB NO.

9672260

52

A-6

1 OF 7

PLANT LIST

KEY	BOTANICAL NAME / COMMON NAME	SIZE	QTY
	TREES		
PY	Plantanus Acerifolia 'Yarwood' Yarwood Sycamore		
PF	Photina 'Frazeri' (6' standards)		
MQ	Melaleuka Quinquenervia (Multitrunk)		
NO	Nerium Oleander (6' standards) 'Sister Agnes' (White)		
QS	Quercus Suber Cork Oak		
	SHRUBS		
AQ	Agapanthus 'Queen Anne'		
CJ	Camellia Japonica 'El Dorado'		
CS	Camellia Sasangua 'White Doves'		
EF	Escallonia Fradesii		
EV	Euryops Veridis		
FM	Fortunella Margarita 'Nagami' Kumquat		
NHD	Nandina 'Harbor Dwarf'		
NC	Nandina 'Compacta'		
RA	Rumohra Adiantiformis (fern)		
RB	Raphiolepis 'Ballarina'		
RS	Raphiolepis 'Springtime'		
	VINES & GROUNDCOVERS		
GO	Gazania 'Orange' (green, clumping)		
GY	Garzania 'Yellow' (green' clumping)		
HS	Hemerocalis 'Stella d' Oro' Stella Daylily		
PT	Parthenocissis Tricuspidata Boston Ivy		
SH	Sollya Heterophylla		
TA	Trachelospermum Asiaticum Asian Jasmine		
VM	Vinca Minor		
TCP	Teucrium Chamaedrys 'Prostratum' Prostrata Germander		

Note: All planting areas shall be watered with an automatic irrigation system.

9672260

53

Copyright 1995
EDWIN BRUCE ASSOCIATES. All designs drawings, and written material appearing herein, are protected and constitute original and unpublished work of the Architect and may not be copied, revised, re-used or disclosed without the written consent of the Architect. Equipment manufactured by others is excluded. Drawings and specifications are instruments of architectural service, and shall remain the property of the Architect. Use is restricted to the site for which they were prepared.

BRANDEAU
Associates
Landscape
Architects

1005 Lakedale Way
Sunnyvale, CA 94089
Ph 415/967 6677

state licence No. 1676

KFC

K.F.C. JENSEN
CORNER OF BASCOM AVE. AND NAGLEE AVE.
SAN JOSE, CALIFORNIA

DEC. 19, 1995	DATE
D.B.	DRAWN
1/8"=1'-0"	SCALE
9405	JOB NO.

A-7